Federal Register

2–19–10 Friday
Vol. 75 No. 33 Feb. 19, 2010

Pages 7337–7544

The **FEDERAL REGISTER** (ISSN 0097–6326) is published daily, Monday through Friday, except official holidays, by the Office of the Federal Register, National Archives and Records Administration, Washington, DC 20408, under the Federal Register Act (44 U.S.C. Ch. 15) and the regulations of the Administrative Committee of the Federal Register (1 CFR Ch. I). The Superintendent of Documents, U.S. Government Printing Office, Washington, DC 20402 is the exclusive distributor of the official edition. Periodicals postage is paid at Washington, DC.

The **FEDERAL REGISTER** provides a uniform system for making available to the public regulations and legal notices issued by Federal agencies. These include Presidential proclamations and Executive Orders, Federal agency documents having general applicability and legal effect, documents required to be published by act of Congress, and other Federal agency documents of public interest.

Documents are on file for public inspection in the Office of the Federal Register the day before they are published, unless the issuing agency requests earlier filing. For a list of documents currently on file for public inspection, see *www.federalregister.gov.*

The seal of the National Archives and Records Administration authenticates the Federal Register as the official serial publication established under the Federal Register Act. Under 44 U.S.C. 1507, the contents of the **Federal Register** shall be judicially noticed.

The **Federal Register** is published in paper and on 24x microfiche. It is also available online at no charge as one of the databases on GPO Access, a service of the U.S. Government Printing Office.

The online edition of the **Federal Register**, *www.gpoaccess.gov/nara,* available through GPO Access, is issued under the authority of the Administrative Committee of the Federal Register as the official legal equivalent of the paper and microfiche editions (44 U.S.C. 4101 and 1 CFR 5.10). It is updated by 6 a.m. each day the **Federal Register** is published and includes both text and graphics from Volume 59, Number 1 (January 2, 1994) forward.

For more information about GPO Access, contact the GPO Access User Support Team, call toll free 1-888-293-6498; DC area 202-512-1530; fax at 202-512-1262; or via e-mail at *gpoaccess@gpo.gov.* The Support Team is available between 7:00 a.m. and 9:00 p.m. Eastern Time, Monday–Friday, except official holidays.

The annual subscription price for the **Federal Register** paper edition is $749 plus postage, or $808, plus postage, for a combined **Federal Register, Federal Register** Index and List of CFR Sections Affected (LSA) subscription; the microfiche edition of the **Federal Register** including the **Federal Register** Index and LSA is $165, plus postage. Six month subscriptions are available for one-half the annual rate. The prevailing postal rates will be applied to orders according to the delivery method requested. The price of a single copy of the daily **Federal Register,** including postage, is based on the number of pages: $11 for an issue containing less than 200 pages; $22 for an issue containing 200 to 400 pages; and $33 for an issue containing more than 400 pages. Single issues of the microfiche edition may be purchased for $3 per copy, including postage. Remit check or money order, made payable to the Superintendent of Documents, or charge to your GPO Deposit Account, VISA, MasterCard, American Express, or Discover. Mail to: U.S. Government Printing Office—New Orders, P.O. Box 979050, St. Louis, MO 63197-9000; or call toll free 1-866-512-1800, DC area 202-512-1800; or go to the U.S. Government Online Bookstore site, see *bookstore.gpo.gov.*

There are no restrictions on the republication of material appearing in the **Federal Register.**

How To Cite This Publication: Use the volume number and the page number. Example: 75 FR 12345.

Postmaster: Send address changes to the Superintendent of Documents, Federal Register, U.S. Government Printing Office, Washington, DC 20402, along with the entire mailing label from the last issue received.

SUBSCRIPTIONS AND COPIES

PUBLIC	
Subscriptions:	
Paper or fiche	**202–512–1800**
Assistance with public subscriptions	**202–512–1806**
General online information	**202–512–1530; 1–888–293–6498**
Single copies/back copies:	
Paper or fiche	**202–512–1800**
Assistance with public single copies	**1–866–512–1800 (Toll-Free)**
FEDERAL AGENCIES	
Subscriptions:	
Paper or fiche	**202–741–6005**
Assistance with Federal agency subscriptions	**202–741–6005**

Printed on recycled paper.

Contents

Federal Register

Vol. 75, No. 33

Friday, February 19, 2010

Agriculture Department
See Commodity Credit Corporation
See Farm Service Agency
See Forest Service
NOTICES
Agency Information Collection Activities; Proposals, Submissions, and Approvals, 7438

Army Department
See Engineers Corps

Blind or Severely Disabled, Committee for Purchase From People Who Are
See Committee for Purchase From People Who Are Blind or Severely Disabled

Centers for Disease Control and Prevention
NOTICES
Meetings:
Advisory Committee to the Director, Ethics Subcommittee; Correction, 7483
Statement of Organization, Functions, and Delegations of Authority, 7489–7490

Commerce Department
See Industry and Security Bureau
See International Trade Administration
See National Oceanic and Atmospheric Administration
NOTICES
Agency Information Collection Activities; Proposals, Submissions, and Approvals, 7441–7443

Committee for Purchase From People Who Are Blind or Severely Disabled
NOTICES
Procurement List; Additions and Deletions, 7450–7452

Commodity Credit Corporation
NOTICES
Environmental Impact Statements; Availability, etc.:
Conservation Reserve Program, 7438–7440

Community Development Financial Institutions Fund
NOTICES
Agency Information Collection Activities; Proposals, Submissions, and Approvals, 7538

Defense Department
See Engineers Corps
See Navy Department
NOTICES
Federal Acquisition Regulation:
Agency Information Collection Activities; Proposals, Submissions, and Approvals, 7524–7525

Delaware River Basin Commission
PROPOSED RULES
Schedule of Water Charges, 7411–7412
NOTICES
Meeting and Public Hearing, 7454–7457
Public Hearing:
Stone Energy Corp. Proposed Surface Water Withdrawal and Natural Gas Well Site, 7457–7458

Education Department
NOTICES
Agency Information Collection Activities; Proposals, Submissions, and Approvals, 7458–7459
Applications for New Awards (FY 2010):
Improving Literacy Through School Libraries Program, 7459–7463
Meetings:
National Assessment Governing Board, 7463–7464

Employment and Training Administration
RULES
Temporary Agricultural Employment of H–2A Aliens in the United States; Changes to the Labor Certification Process; Public Briefings, 7367–7368
NOTICES
Meetings:
Native American Employment and Training Council, 7524

Employment Standards Administration
See Wage and Hour Division

Energy Department
See Federal Energy Regulatory Commission
NOTICES
Meeting and Webcast:
Energy Efficient Building Systems Regional Innovation Cluster Initiative – Joint Federal Funding Opportunity Announcement Information Session, 7464–7465

Engineers Corps
NOTICES
Draft General Conformity Determination:
Pacific L.A. Marine Terminal LLC Crude Oil Terminal Project, Port of Los Angeles, Los Angeles County, CA, 7452
Environmental Impact Statements; Availability, etc.:
Alaska Stand Alone Pipeline Natural Gas Transportation Pipeline, 7452

Environmental Protection Agency
PROPOSED RULES
Amendments to Enforceable Consent Agreement Procedural Rules, 7428–7434
Tier 2 Light-Duty Vehicle and Light-Duty Truck Emission Standards and Gasoline Sulfur Control Requirements (Section 610 Review), 7426–7428
NOTICES
8-Hour Ozone Sub-Area Motor Vehicle Emission Budgets for Transportation Conformity Purposes:
Adequacy Status of the North Carolina Portion of the Charlotte–Gastonia–Rock Hill Bi-State Area Reasonable Further Progress Plan, 7474–7475
Agency Information Collection Activities; Proposals, Submissions, and Approvals:
Application for Sustainable Water Leadership, 7475–7477
Draft Toxicological Review of Inorganic Arsenic:
In Support of the Summary Information on the Integrated Risk Information System, 7477–7479
Environmental Impact Statements; Availability, etc.:
Weekly Receipt, 7479–7480

Executive Office of the President
See Presidential Documents
See Science and Technology Policy Office

Farm Credit Administration
NOTICES
Meetings; Sunshine Act, 7480

Farm Service Agency
NOTICES
Environmental Impact Statements; Availability, etc.:
Conservation Reserve Program, 7438–7440

Federal Aviation Administration
RULES
Airworthiness Directives:
SICLI Halon 1211 Portable Fire Extinguishers as Installed on Various Airplanes and Rotorcraft, 7342–7345
Filtered Flight Data, 7345–7357
PROPOSED RULES
Airworthiness Directives:
British Aerospace Regional Aircraft Model Jetstream Series 3101 and Jetstream Model 3201 Airplanes, 7405–7407
PIAGGIO AERO INDUSTRIES S.p.A Model PIAGGIO P–180 Airplanes, 7409–7411
Piper Aircraft, Inc. Models PA–32R–301T and PA–46–350P Airplanes, 7407–7409

Federal Communications Commission
RULES
Closed Captioning of Video Programming, 7368–7370
Closed Captioning of Video Programming; Closed Captioning Requirements for Digital Television Receivers, 7370
NOTICES
Meetings:
Advisory Committee for the 2012 World Radiocommunication Conference (Rescheduled to March 2, 2010), 7480

Federal Deposit Insurance Corporation
NOTICES
Meetings; Sunshine Act, 7480–7481

Federal Energy Regulatory Commission
NOTICES
Agency Information Collection Activities; Proposals, Submissions, and Approvals, 7465–7467
Applications:
Gary E. Hall and Rita C. Hall, 7467–7469
Natural Currents Energy Services, LLC, 7467, 7469
Panel Member List for Hydropower Licensing Study Dispute Resolution, 7469
Pine Prairie Energy Center, LLC, 7470–7471
Whitman River Dam, Inc., 7469–7470
Complaint:
Chandra Coffee and Rabun Boatworks v. Georgia Power Co., 7471
Environmental Assessment:
Duke Energy Carolinas, LLC, 7471–7472
Southern Natural Gas Co., 7472–7473
Filings:
SunZia Transmission, LLC, 7473–7474
Prior Notice of Activity Under Blanket Certificate:
CenterPoint Energy Gas Transmission Co., 7474

Federal Highway Administration
NOTICES
Environmental Impact Statements; Availability, etc.:
Ottawa County, MI; US–31 Holland to Grand Haven Project, 7536–7537

Food and Drug Administration
PROPOSED RULES
Reporting Information Regarding Falsification of Data, 7412–7426
NOTICES
Statement of Organizations, Functions, and Delegations of Authority:
Office of the Commissioner Reorganization, 7490–7512

Forest Service
NOTICES
Meetings:
Eastern Washington Cascades Provincial Advisory Committee and the Yakima Provincial Advisory Committee, 7440
Idaho Panhandle Resource Advisory Committee, 7440
Supplemental Information Report:
Oil and Gas Leasing on Lands Administered by the Dixie National Forest, Supplemental Information Report—Air Resources, 7440–7441

General Services Administration
NOTICES
Federal Acquisition Regulation:
Agency Information Collection Activities; Proposals, Submissions, and Approvals, 7524–7525

Health and Human Services Department
See Centers for Disease Control and Prevention
See Food and Drug Administration
See Health Resources and Services Administration
See National Institutes of Health
See Substance Abuse and Mental Health Services Administration
NOTICES
Meetings:
Secretary's Advisory Committee on Human Research Protections, 7481

Health Resources and Services Administration
NOTICES
Agency Information Collection Activities; Proposals, Submissions, and Approvals, 7481–7482

Homeland Security Department
See U.S. Customs and Border Protection

Housing and Urban Development Department
NOTICES
Agency Information Collection Activities; Proposals, Submissions, and Approvals:
FHA TOTAL (Technology Open to Approved Lenders) Mortgage Scorecard, 7513–7514

Indian Affairs Bureau
NOTICES
Agency Information Collection Activities; Proposals, Submissions, and Approvals:
Appointed Counsel in Involuntary Indian Child Custody Proceedings in State Courts, 7514–7515

Industry and Security Bureau
RULES
Addition of Certain Persons to the Entity List:
Addition of Persons Acting Contrary to the National Security or Foreign Policy Interests of the United States, 7358–7361

Interior Department
See Indian Affairs Bureau
See Land Management Bureau
See Minerals Management Service
See National Park Service

Internal Revenue Service
NOTICES
Meetings:
Area 1 Taxpayer Advocacy Panel (New York, Connecticut, Massachusetts, Rhode Island, New Hampshire, Vermont and Maine), 7541
Area 2 Taxpayer Advocacy Panel (Delaware, North Carolina, South Carolina, New Jersey, Maryland, Pennsylvania, Virginia, West Virginia and District of Columbia), 7542–7543
Area 3 Taxpayer Advocacy Panel (Florida, Georgia, Alabama, Mississippi, Louisiana, Arkansas, and the Territory of Puerto Rico), 7541–7542
Area 4 Taxpayer Advocacy Panel (Illinois, Indiana, Kentucky, Michigan, Ohio, Tennessee, and Wisconsin), 7539
Area 5 Taxpayer Advocacy Panel (Iowa, Kansas, Minnesota, Missouri, Nebraska, Oklahoma, and Texas), 7539
Area 6 Taxpayer Advocacy Panel (Arizona, Colorado, Idaho, Montana, New Mexico, North Dakota, Oregon, South Dakota, Utah, Washington, and Wyoming), 7540
Area 7 Taxpayer Advocacy Panel (Alaska, California, Hawaii, and Nevada), 7541–7542
Taxpayer Advocacy Panel Earned Income Tax Credit Project Committee, 7540
Taxpayer Advocacy Panel Joint Committee, 7542
Taxpayer Advocacy Panel Notice Improvement Project Committee, 7540
Taxpayer Advocacy Panel Small Business/Self Employed Project Committee, 7539
Taxpayer Advocacy Panel Tax Forms and Publications/MLI Project Committee, 7542
Taxpayer Advocacy Panel Taxpayer Assistance Center Committee, 7539–7540
Taxpayer Advocacy Panel Volunteer Income Tax Assistance Issue Committee, 7540–7541

International Boundary and Water Commission, United States and Mexico
NOTICES
Environmental Impact Statements; Availability, etc.:
Flood Control Improvements and Partial Levee Relocation, Presidio Flood Control Project, Presidio, TX, 7522

International Trade Administration
NOTICES
Postponement of Preliminary Determinations of Antidumping Duty Investigations:
Coated Paper Suitable for High-Quality Print Graphics Using Sheet-Fed Presses From Indonesia and the People's Republic of China, 7447–7448

International Trade Commission
NOTICES
Investigations:
Certain Digital Cameras, 7519–7520
Certain Refrigerators and Components, 7520–7522
Certain Video Displays, Components, and Products Containing Same, 7520

Labor Department
See Employment and Training Administration
See Occupational Safety and Health Administration
See Wage and Hour Division

Land Management Bureau
NOTICES
Intent to Prepare an Amendment to the Ring of Fire Resource Management Plan:
Campbell Tract Facility, Anchorage, AK, 7517
Meetings:
Sierra Front Northwestern Basin Resource Advisory Council, Nevada, 7518
State of Arizona Resource Advisory Council, 7518

Mexico and United States, International Boundary and Water Commission
See International Boundary and Water Commission, United States and Mexico

Minerals Management Service
NOTICES
Environmental Documents Prepared for Proposed Mineral Exploration on the Alaska Outer Continental Shelf, 7515

National Aeronautics and Space Administration
NOTICES
Federal Acquisition Regulation:
Agency Information Collection Activities; Proposals, Submissions, and Approvals, 7524–7525

National Credit Union Administration
RULES
Secondary Capital Accounts, 7339–7342

National Highway Traffic Safety Administration
RULES
Federal Motor Vehicle Safety Standards:
Door Locks and Door Retention Components, 7370–7383

National Institutes of Health
NOTICES
Agency Information Collection Activities; Proposals, Submissions, and Approvals:
Atherosclerosis Risk in Communities Study, 7482–7483
Meetings:
Center for Scientific Review, 7483, 7486
Eunice Kennedy Shriver National Institute of Child Health and Human Development, 7484–7485
National Cancer Institute, 7485, 7489
National Center for Research Resources, 7487–7488
National Institute of Allergy and Infectious Diseases, 7486–7489
National Institute of Dental and Craniofacial Research, 7485–7486
National Institute of Environmental Health Sciences, 7487
National Institute of General Medical Sciences, 7484, 7488

National Oceanic and Atmospheric Administration
RULES
Fisheries of the Caribbean, Gulf of Mexico, and South Atlantic:
Coastal Migratory Pelagic Resources of the Gulf of Mexico and South Atlantic; Closure, 7402
Fisheries of the Exclusive Economic Zone Off Alaska:
Bering Sea and Aleutian Islands Trawl Limited Access Fishery in the C. opilio Bycatch Limitation Zone, etc., 7403–7404
Pacific Cod by Catcher/Processors Using Hook-and-Line Gear in the Bering Sea and Aleutian Islands Management Area, 7403
Gray's Reef National Marine Sanctuary Regulations on the Use of Spearfishing Gear, 7361–7367
International Fisheries; Western and Central Pacific Fisheries for Highly Migratory Species:
Initial Implementation of the Western and Central Pacific Fisheries Convention; Correction, 7361
Taking of Marine Mammals Incidental to Commercial Fishing Operations:
Harbor Porpoise Take Reduction Plan Regulations, 7383–7402
PROPOSED RULES
Endangered and Threatened Species:
Critical Habitat Designation for the Endangered Leatherback Sea Turtle, 7434–7435
Fisheries of the Northeastern United States:
Atlantic Deep-Sea Red Crab Fisheries; 2010 Atlantic Deep-Sea Red Crab Specifications, 7435–7437
NOTICES
Endangered Species; File No. 14381:
Issuance of Permit, 7443
Meetings:
Gulf of Mexico Fishery Management Council, 7444–7445
Pacific Fishery Management Council, 7445–7447
Western Pacific Fishery Management Council, 7443–7445
Species Recovery Grants to Tribes Program, 7448–7450

National Park Service
NOTICES
National Register of Historic Places:
Notification of Pending Nominations and Related Actions, 7518–7519
Weekly Listing of Historic Properties, 7519

Navy Department
NOTICES
Meetings:
Chief of Naval Operations Executive Panel, 7452–7454
U.S. Naval Academy Board of Visitors, 7453

Nuclear Regulatory Commission
NOTICES
Application for a License to Export High-Enriched Uranium, 7525
Meetings; Sunshine Act, 7525–7526
Withdrawal of Regulatory Guide, 7526

Occupational Safety and Health Administration
NOTICES
Agency Information Collection Activities; Proposals, Submissions, and Approvals:
Peer Review, Conflict of Interest and Disclosure Form, 7522–7524

Postal Regulatory Commission
PROPOSED RULES
Periodic Reporting, 7426

Presidential Documents
ADMINISTRATIVE ORDERS
U.S.–India Nuclear Cooperation Approval and Nonproliferation Enhancement Act; Certifications (Presidential Determination)
No. 2010–04 of February 3, 2010, 7337

Science and Technology Policy Office
NOTICES
Consumer Interface with the Smart Grid, 7526–7528

Securities and Exchange Commission
NOTICES
Self-Regulatory Organizations; Proposed Rule Changes:
Financial Industry Regulatory Authority, Inc., 7530–7534
NASDAQ OMX BX, Inc., 7528–7530
NASDAQ OMX PHLX, Inc., 7534–7535

State Department
NOTICES
Culturally Significant Objects Imported for Exhibition Determinations:
Hendrick Avercamp (1585–1634): The Little Ice Age, 7536
The Aztec Pantheon and the Art Empire, 7536
The Dead Sea Scrolls; Words That Changed the World, 7536

Substance Abuse and Mental Health Services Administration
NOTICES
Meetings:
Drug Testing Advisory Board, 7483–7484

Surface Transportation Board
NOTICES
Lease and Operation Exemptions:
Elkhart and Western Railroad Co.; Norfolk Southern Railway Co., 7537–7538

Transportation Department
See Federal Aviation Administration
See Federal Highway Administration
See National Highway Traffic Safety Administration
See Surface Transportation Board

Treasury Department
See Community Development Financial Institutions Fund
See Internal Revenue Service

U.S. Customs and Border Protection
NOTICES
Accreditation and Approval as a Commercial Gauger and Laboratory:
Inspectorate America Corp., 7512–7513
Accreditation as a Commercial Laboratory:
Dixie Services, Inc., 7513

U.S.–China Economic and Security Review Commission
NOTICES
Open Public Hearing, 7543

Wage and Hour Division
RULES
Temporary Agricultural Employment of H–2A Aliens in the United States; Changes to the Labor Certification Process; Public Briefings, 7367–7368

Reader Aids

Consult the Reader Aids section at the end of this page for phone numbers, online resources, finding aids, reminders, and notice of recently enacted public laws.

To subscribe to the Federal Register Table of Contents LISTSERV electronic mailing list, go to http://listserv.access.gpo.gov and select Online mailing list archives, FEDREGTOC-L, Join or leave the list (or change settings); then follow the instructions.

CFR PARTS AFFECTED IN THIS ISSUE

A cumulative list of the parts affected this month can be found in the Reader Aids section at the end of this issue.

3 CFR

Administrative Orders:

Presidential Determinations:

No. 2010–04 of February 3, 2010 7337

12 CFR

701.....7339

14 CFR

39.....7342
121.....7345
125.....7345
135.....7345

Proposed Rules:

39 (3 documents) ...7405, 7407, 7409

15 CFR

744.....7358
902.....7361
922.....7361

18 CFR

Proposed Rules:

410.....7411

20 CFR

655.....7367

21 CFR

Proposed Rules:

16.....7412
58.....7412
71.....7412
101.....7412
170.....7412
171.....7412
190.....7412
312.....7412
511.....7412
571.....7412
812.....7412

29 CFR

501.....7367

39 CFR

Proposed Rules:

3050.....7426

40 CFR

Proposed Rules:

80.....7426
85.....7426
86.....7426
790.....7428

47 CFR

79 (3 documents) ...7368, 7369, 7370

49 CFR

571.....7370

50 CFR

229.....7383
300.....7361
622.....7402
679 (2 documents) 7403

Proposed Rules:

226.....7434
648.....7435

Federal Register
Vol. 75, No. 33
Friday, February 19, 2010

Presidential Documents

Title 3—

The President

Presidential Determination No. 2010–04 of February 3, 2010

Certifications Pursuant to Section 104 of the United States-India Nuclear Cooperation Approval and Nonproliferation Enhancement Act Regarding the Safeguards Agreement Between India and the International Atomic Energy Agency

Memorandum for the Secretary of State

Pursuant to section 104 of the United States-India Nuclear Cooperation Approval and Nonproliferation Enhancement Act (Public Law 110–369), I hereby determine and certify that:

1. The Agreement between the Government of India and the International Atomic Energy Agency for the Application of Safeguards to Civilian Nuclear Facilities, as approved by the Board of Governors of the International Atomic Energy Agency on August 1, 2008 (the "Safeguards Agreement"), has entered into force; and

2. The Government of India has filed a declaration of facilities pursuant to paragraph 13 of the Safeguards Agreement that is not materially inconsistent with the facilities and schedule described in paragraph 14 of the Separation Plan presented in the national parliament of India on May 11, 2006, taking into account the later initiation of safeguards than was anticipated in the Separation Plan.

You are authorized and directed to publish this determination in the *Federal Register*.

THE WHITE HOUSE,
WASHINGTON, February 3, 2010

[FR Doc. 2010–3386
Filed 2–18–10; 8:45 am]
Billing code 4710–10–P

Rules and Regulations

Federal Register
Vol. 75, No. 33
Friday, February 19, 2010

This section of the FEDERAL REGISTER contains regulatory documents having general applicability and legal effect, most of which are keyed to and codified in the Code of Federal Regulations, which is published under 50 titles pursuant to 44 U.S.C. 1510.

The Code of Federal Regulations is sold by the Superintendent of Documents. Prices of new books are listed in the first FEDERAL REGISTER issue of each week.

NATIONAL CREDIT UNION ADMINISTRATION

12 CFR Part 701

RIN 3133–AD67

Secondary Capital Accounts

AGENCY: National Credit Union Administration (NCUA).

ACTION: Interim final rule with request for comments.

SUMMARY: NCUA is amending its rules governing secondary capital accounts to permit low-income designated credit unions to redeem all or part of secondary capital accepted from the United States Government or any of its subdivisions at any time after the secondary capital has been on deposit for two years. The amendments will also allow early redemption, under the same terms and conditions, of secondary capital accepted as a match to the government-funded secondary capital. Finally, the amendments change the loss distribution provision that applies to secondary capital accounts so that secondary capital accepted under the 2010 Community Development Capital Program is senior to any required matching secondary capital accepted from an alternative source. Early redemption will continue to require approval of the appropriate Regional Director. The amended rule will accomplish the following: bring NCUA regulations into compliance with the Community Development Capital Program; and allow qualifying low-income designated credit unions that accept secondary capital pursuant to the Troubled Asset Relief Program through the Community Development Capital Program to avoid an accelerated interest rate on the secondary capital over the last five years to maturation.

DATES: This rule is effective February 19, 2010. Comments must be received on or before March 22, 2010.

ADDRESSES: You may submit comments by any of the following methods (Please send comments by one method only):

- *Federal eRulemaking Portal: http://www.regulations.gov.* Follow the instructions for submitting comments.
- *NCUA Web Site: http://www.ncua.gov/Resources/RegulationsOpinionsLaws/ProposedRegulations.aspx.* Follow the instructions for submitting comments.
- *E-mail:* Address to *regcomments@ncua.gov.* Include "[Your name] Comments on Secondary Capital Accounts" in the e-mail subject line.
- *Fax:* (703) 518–6319. Use the subject line described above for e-mail.
- *Mail:* Address to Mary Rupp, Secretary of the Board, National Credit Union Administration, 1775 Duke Street, Alexandria, Virginia 22314–3428.
- *Hand Delivery/Courier:* Same as mail address.

FOR FURTHER INFORMATION CONTACT: Kevin Tuininga, Trial Attorney, at the above address, or telephone: (703) 518–6543.

SUPPLEMENTARY INFORMATION:

Public Inspection of Comments: All public comments are available on the agency's Web site at *http://www.ncua.gov/Resources/RegulationsOpinionsLaws/RegulationComments.aspx* as submitted, except as may not be possible for technical reasons. Public comments will not be edited to remove any identifying or contact information. Paper copies of comments may be inspected in NCUA's law library at 1775 Duke Street, Alexandria, Virginia 22314, by appointment weekdays between 9 a.m. and 3 p.m. To make an appointment, call (703) 518–6546 or send an e-mail to *OGCMail@ncua.gov.*

A. Background

1. Secondary Capital

Pursuant to the Federal Credit Union Act, 12 U.S.C. 1751 *et seq.,* the NCUA Board ("Board") has authority to permit credit unions serving predominantly low-income members ("LICUs") to accept payments on shares from non-natural persons subject to limitations the Board prescribes. 12 U.S.C. 1757(6). In 1996, the Board exercised this authority by permitting LICUs, including State-chartered credit unions to the extent allowed by State law, to accept secondary capital ("SC") from non-natural person members and nonmembers. 61 FR 50696 (Sept. 27, 1996). The Board intended that SC accounts provide LICUs with additional means to accumulate capital. 61 FR 3788 (Feb. 2, 1996); 71 FR 4234 (Jan. 26, 2006). Accumulated capital could be used to expand lending and financial services and to absorb losses that might otherwise cause or contribute to failure. *Id.*

The Board also implemented a number of measures designed to ensure the safety and soundness of LICUs that accepted SC. 61 FR at 3788, 3791. As part of the safety and soundness measures, the original SC rule prohibited redemption of any part of a SC account prior to maturity. *Id.* at 3791. The rule also directed that LICUs record the capital value of SC accounts with a maturation date of less than five years in accordance with an annual reduction of 20 percent of the original balance. *Id.* This net-worth reduction was designed in large part to avoid overreliance on the availability of temporary SC accounts and to encourage LICUs "to continually replenish their sources of maturing secondary capital to the extent such funds are needed to support ongoing lending programs and other operations." *Id.* at 3789.

In 2006, the Board amended the rule to allow LICUs to redeem discounted SC over the five years prior to maturity at a maximum annual rate of 20 percent of the original balance, subject to the approval of the appropriate Regional Director. 71 FR at 4239. This redemption schedule followed the schedule for discounting the net-worth value of SC accounts. 70 FR 43790 (July 29, 2005). The amendment was designed to prevent the net worth value of SC discounted according to the annual reduction from diluting a LICU's net worth ratio calculated pursuant to NCUA's system of prompt corrective action. 71 FR at 4235. The final 20-percent increment of discounted SC could not be redeemed prior to the maturation date. *Id.*

2. The Troubled Asset Relief Program

On October 3, 2008, the President signed into law the Emergency Economic Stabilization Act of 2008 ("EESA"). Public Law No. 110–343 (2008). The EESA authorized the Secretary of the Treasury to establish

the Troubled Asset Relief Program ("TARP") with the purpose of restoring and sustaining the viability of financial institutions. 12 U.S.C. 5211. Pursuant to TARP, the United States Department of the Treasury ("Treasury") has announced a Capital Program for certified Community Development Financial Institutions ("Community Development Capital Program" or "CDC Program"). To qualify for participation in the CDC Program, credit unions must have a low-income designation pursuant to 12 CFR 701.34.

The terms of the CDC Program provide that LICUs accepted for participation would be eligible to issue CDC Senior Securities, or subordinated debentures, up to an aggregate principal amount of 3.5 percent of the LICU's total assets. The subordinated debentures would be purchased by the Treasury, would have a 13-year maturity, and would pay cumulative interest at an annual rate of two percent until the eighth anniversary of their date of issuance. Over the remaining five years to maturity, the subordinated debentures would pay cumulative interest at an annual rate of nine percent. Under certain circumstances, the CDC Program may also require LICUs to secure matching funds from sources other than the Federal Government. SC that LICUs accept pursuant to the CDC Program ("TARP funds") would be subject to NCUA's regulation governing secondary capital. § 701.34(b). As an additional condition imposed by Treasury, TARP funds accepted as SC under the CDC Program would be senior to any required matching SC from an alternative source with respect to covering losses.

3. Effect on LICUs

Without this interim final rule, NCUA's regulation prevents a Regional Director from approving early redemption of SC outside of the restrictions of the redemption schedule of § 701.34(d)(3). § 701.34(d)(1)–(2). To obtain approval, a LICU must demonstrate six eligibility requirements to the Regional Director's satisfaction. *Id.* If successful, the Regional Director's authority to approve early redemption would remain limited as set forth in the schedule of § 701.34(d)(3). Under that schedule, a LICU can redeem a maximum of 20 percent of the original balance of a SC account per year, beginning at five years remaining maturity. *Id.*

Thus, without an amendment, LICUs that choose to accept TARP funds in the form of SC will be required to hold an annually-decreasing percentage of TARP funds at nine percent interest over five years, a rate potentially higher than other rates that would become available on SC accounts. A similar concern would arise in instances where a LICU might accept matching SC for the TARP funds at a rate higher than it otherwise would in order to benefit from the two-percent rate applicable to TARP funds. The pre-amendment rule could therefore cause some LICUs to forgo application for the CDC Program because of the risk of holding a considerable portion of TARP funds and any match at interest rates significantly above market rates. These LICUs would lose the opportunity to improve lending capability and capital provided by the modest two-percent interest rate on TARP funds over their first eight years. In addition, NCUA's pre-amendment rule would contradict one of the terms of Treasury's CDC Program. The pre-amendment rule required pro-rata loss distribution among all secondary capital accounts, contrary to the seniority requirement Treasury is imposing.

B. Modifications to Section 701.34

The amended rule exempts all SC accounts funded by the United States Government or any of its subdivisions ("government-funded SC") [1] from the limits of the redemption schedule in § 701.34(d)(3). It also exempts SC accepted as a match to the government-funded SC. The exception seeks to accomplish the following: (1) Remove any disincentive for LICUs to accept TARP funds; (2) avoid subjecting LICUs that do accept TARP funds to the stepped-up nine-percent interest rate over the last five years to maturity; and (3) avoid subjecting LICUs to potentially high interest rates on SC accepted as a match to TARP funds over an extended period. The exemption language is broad enough to encompass the early redemption of SC accepted under other government-funded programs that could arise in response to adverse economic conditions.

More narrowly, the amended rule changes the loss distribution procedures applicable to SC accounts so that SC accepted from the United States Government or any of its subdivisions under the CDC Program is senior to any matching SC accepted from an alternative source that the CDC Program requires. This amendment was necessary to conform NCUA regulations to the seniority terms on which Treasury is offering TARP funds under the CDC Program. The amended language allows a LICU to choose between two different methods of subordinating matching SC to SC accepted under the CDC Program.

The first method excludes CDC Program SC from the pro-rata loss distribution procedures until all of its matching SC has been depleted or properly redeemed. Under this method, the pro-rata loss distribution calculation will cause all other SC on deposit at the time a loss is realized to be depleted before the CDC Program SC covers a loss. The first method will be available only if its seniority implications are not inconsistent with agreements governing other SC on deposit at the time a loss is realized.

The second method is available regardless of any agreements governing other SC and must be followed if a LICU cannot apply the first method in light of other SC agreements. This method combines the CDC Program SC and any of its remaining matching SC for purposes of the pro-rata loss distribution procedure. The pro-rata loss apportioned to this combined account is first applied to the matching SC portion. The CDC Program SC becomes available to cover a loss under this method only once all of the matching SC has been depleted or properly redeemed. In effect, this will cause the CDC Program's matching SC to suffer a greater loss in the pro-rata calculation than other SC on deposit.

While the possibility an investor contributing matching SC might suffer a greater loss sooner may make it more difficult for some LICUs to recruit matching SC if it is required under the CDC Program, there may be circumstances where this is the only option available to ensure the matching SC is subordinate to the CDC Program SC while also ensuring the subordination method does not cause a violation of any agreements governing other SC on deposit at the time a loss is realized. Following one of these two methods is necessary because Treasury's terms direct that any matching SC required under the Program be subordinate to the CDC Program SC. These two subordination methods only need to be applied to government-funded SC accepted under the CDC Program of 2010 and not to other government-funded SC that does not require seniority status.

All other requirements of § 701.34 remain unchanged and applicable to government-funded SC and its matching SC. The interim final rule continues to require that the appropriate Regional Director approve any request for partial or full redemption pursuant to the procedures of § 701.34(d)(1) and (2). All six eligibility requirements of that

[1] Government-funded SC refers only to SC funded by the Federal government as opposed to state governments or their subdivisions.

section must be met to obtain approval, including that the LICU must have had the SC on deposit for at least two years. In fact, the amended language expressly incorporates the two-year deposit requirement, which is intended to facilitate financial stability and encourage implementation of strategic business plans and budget objectives. *See* 70 FR at 43790. In the case of state-chartered LICUs, § 741.204(d) continues to require that the LICU obtain the approval of its State Supervisory Authority with the concurrence of the appropriate NCUA Regional Director.

Clarifying the criteria for approval of SC redemption, the amended rule states that all government-funded SC is eligible for redemption along with its matching SC, regardless of whether the SC has been discounted pursuant to the net worth schedule of § 701.34(c)(2). This language seeks to avoid any ambiguity that could otherwise arise by inclusion of the term "discounted secondary capital" in the approval procedures of § 701.34(d)(1) and (2). For purposes of the approval procedures under the amended rule, the SC need not have been discounted to be eligible for early redemption, as is still required for non-government-funded SC that does not constitute a match to government-funded SC. Nevertheless, a LICU that accepts government-funded SC must still follow the schedule for discounting net worth as set forth in § 701.34(c)(2) if the SC and its match, if any, is not redeemed prior to the last five years to maturity.

If government-funded SC and its matching SC are redeemed prior to the last five years to maturity, LICUs would entirely avoid the net worth schedule, which resurrects risks the schedule was originally designed to hedge against. These include the risk that a LICU could place overreliance on the availability of the SC as it approaches its approved early redemption date and the risk that the LICU could neglect to plan to replenish the SC to the extent needed as the early redemption date nears. 61 FR at 3789. However, the eligibility criteria the LICU is required to demonstrate to the Regional Director will continue to guard against those risks, particularly the requirements that the LICU demonstrate it will "have a post-redemption net worth classification of 'adequately capitalized'" and that the SC "will not be needed to cover losses prior to the final maturity of the account." § 701.34(d)(1)(i), (iii). Other approval eligibility requirements could come into play as well, depending on relevant circumstances at the time approval is requested or any conditions imposed on interdependent SC accounts.

If the eligibility requirements are met, the rule would allow redemption of matching SC on the same or a different schedule or rate than the government-funded SC if not otherwise restricted.[2] For example, if the matching SC bears a more favorable interest rate than its paired government-funded SC, a LICU may choose to hold the matching SC for a longer period. Similarly, a Regional Director may disallow an application for early redemption of matching SC, despite allowing it for government-funded SC, if the Regional Director determines such would be appropriate under the approval criteria. In circumstances where the government-funded SC has been redeemed, the SC originally accepted as a match for the government-funded SC, through maturity, would remain eligible for early redemption pursuant to the exception rather than the schedule of § 701.34(d)(3).

The amended rule is not intended to affect in any manner the SC redemption procedures for non-government-funded SC that is not accepted as a match to government-funded SC.

C. Interim Final Rule and Immediate Effective Date

NCUA is issuing this rulemaking as an interim final rule effective upon publication. The Administrative Procedure Act (APA), 5 U.S.C. 553, requires that before a rulemaking can be finalized it must first be published as a notice of proposed rulemaking with the opportunity for public comment, unless the agency for good cause finds that notice and public comment are impracticable, unnecessary, or contrary to the public interest. Additionally, the APA requires that, once finalized, a rulemaking must have a delayed effective date of 30 days from the date of publication, except for good cause.

In this regard, NCUA invokes the good cause exception to the requirements of the APA. NCUA believes good cause exists for issuing these amendments as an interim final rule effective immediately. Due to Treasury's announcement of the CDC Program and the short deadline by which LICUs must submit applications for the Program, it is imperative that NCUA immediately remove any regulatory disincentive for LICUs to apply. An immediate amendment is also necessary to avoid the former rule's conflict with Treasury's SC seniority requirement.

The interim final rule makes clear to LICUs that if they apply for TARP funds through the CDC Program, they will have an opportunity to avoid the accelerated nine-percent interest rate as the TARP funds approach maturity. The rule will provide a similar opportunity with respect to any matching funds that may be required. Finally, the interim rule is limited in scope and does not impose any regulatory burden; rather, the rule provides greater flexibility for LICUs to assist their members.

For these reasons, NCUA has determined that the public notice and participation that the APA ordinarily requires before a regulation may take effect would, in this case, be contrary to the public interest and, further, that good cause exists for waiving the customary 30-day delayed effective date. Nevertheless, NCUA would like the benefit of public comment before adopting a permanent final rule and invites interested parties to submit comments during a 30-day comment period. In adopting the final regulation, NCUA will revise the interim rule in light of the comments received, if appropriate.

Regulatory Procedures

Regulatory Flexibility Act

The Regulatory Flexibility Act requires NCUA to prepare an analysis to describe any significant economic impact a rule may have on a substantial number of small entities (primarily those under ten million dollars in assets). The interim final rule allows LICUs to redeem SC accepted from the United States Government or any of its subdivisions, along with its matching SC, at any time after the SC has been on deposit for two years, without imposing any additional regulatory burden. The rule will not have a significant economic impact on a substantial number of small credit unions. Thus, a Regulatory Flexibility Analysis is not required.

Paperwork Reduction Act

NCUA has determined that this rule will not increase paperwork requirements under the Paperwork Reduction Act of 1995 and regulations of the Office of Management and Budget.

Executive Order 13132

Executive Order 13132 encourages independent regulatory agencies to consider the impact of their regulatory actions on State and local interests. NCUA, an independent regulatory agency as defined in 44 U.S.C. 3502(5), voluntarily adheres to the fundamental

[2] In some instances, matching SC might be eligible for redemption before the government-funded SC it is matched with, depending on the conditions imposed by the program under which the government-funded SC was accepted.

federalism principles addressed by the Executive Order. This rule would not have a substantial direct effect on the States, on the relationship between the national government and the States, or on the distribution of power and responsibilities among the various levels of government. Accordingly, this rule does not constitute a policy that has federalism implications for purposes of the Executive Order.

Treasury and General Government Appropriations Act, 1999

NCUA has determined that the rule will not affect family well-being within the meaning of section 654 of the Treasury and General Government Appropriations Act, 1999, Public Law 105–277, 112 Stat. 2681 (1998).

Small Business Regulatory Enforcement Fairness Act

The Small Business Regulatory Enforcement Fairness Act of 1996 (Pub. L. 104–121) (SBREFA) provides generally for congressional review of agency rules. A reporting requirement is triggered in instances where NCUA issues a final rule as defined by Section 551 of the APA. 5 U.S.C. 551. NCUA does not believe this interim final rule is a "major rule" within the meaning of the relevant sections of SBREFA. NCUA has submitted the rule to the Office of Management and Budget for its determination in that regard.

List of Subjects in 12 CFR Part 701

Credit, Credit unions, Mortgages.

By the National Credit Union Administration Board, this 9th day of February, 2010.

Mary F. Rupp,
Secretary of the Board.

■ For the reasons discussed above, 12 CFR part 701 is amended as follows:

PART 701—ORGANIZATION AND OPERATIONS OF FEDERAL CREDIT UNIONS

■ 1. The authority citation for part 701 continues to read as follows:

Authority: 12 U.S.C. 1752(5), 1755, 1756, 1757, 1758, 1759, 1761a, 1761b, 1766, 1767, 1782, 1784, 1786, 1787, 1789. Section 701.6 is also authorized by 15 U.S.C. 3717. Section 701.31 is also authorized by 15 U.S.C. 1601 *et seq.;* 42 U.S.C. 1981 and 3601–3610. Section 701.35 is also authorized by 42 U.S.C. 4311–4312.

■ 2. Amend § 701.34 by adding a sentence to the end of paragraph (b)(7) introductory text, adding paragraphs (b)(7)(i) and (ii), and adding paragraph (d)(4) to read as follows:

§ 701.34 Designation of low income status; Acceptance of secondary capital accounts by low-income designated credit unions.

* * * * *

(b) * * *

(7) * * * In instances where a LICU accepts secondary capital from the United States Government or any of its subdivisions under the Community Development Capital Program of 2010 ("CDCP secondary capital") and matching funds are required under the Program and are on deposit in the form of secondary capital at the time a loss is realized, a LICU must apply either of the following pro-rata loss distribution procedures to the CDCP secondary capital and its matching secondary capital with respect to the loss:

(i) If not inconsistent with any agreements governing other secondary capital on deposit at the time a loss is realized, the CDC secondary capital may be excluded from the calculation of the pro-rata loss distribution until all of its matching secondary capital has been depleted or properly redeemed, thereby causing the CDC secondary capital to be held as senior to all other secondary capital until its matching secondary capital is exhausted. The CDCP secondary capital should be included in the calculation of the pro-rata loss distribution and is available to cover the loss only after all of its matching secondary capital has been depleted or properly redeemed.

(ii) Regardless of any agreements applicable to other secondary capital, the CDCP secondary capital and its matching secondary capital may be considered a single account for purposes of determining a pro-rata share of the loss and the amount determined as the pro-rata share for the combined account must first be applied to the matching secondary capital account, thereby causing the CDCP secondary capital to be held as senior to its matching secondary capital. The CDCP secondary capital is available to cover the loss only after all of its matching secondary capital has been depleted or properly redeemed.

* * * * *

(d) * * *

(4) *Early redemption exception.* Subject to the written approval of the appropriate Regional Director obtained pursuant to the requirements of paragraphs (d)(1) and (2) of this section, a LICU can redeem all or part of secondary capital accepted from the United States Government or any of its subdivisions at any time after the secondary capital has been on deposit for two years. If the secondary capital was accepted under conditions that required matching secondary capital from a source other than the Federal Government, the matching secondary capital may also be redeemed in the manner set forth in the preceding sentence. For purposes of obtaining the appropriate Regional Director's approval, all secondary capital a LICU accepts from the United States Government or any of its subdivisions, as well as its matching secondary capital, if any, is eligible for early redemption regardless of whether any part of the secondary capital has been discounted pursuant to paragraph (c)(2) of this section.

* * * * *

[FR Doc. 2010–3160 Filed 2–18–10; 8:45 am]

BILLING CODE 7535–01–P

DEPARTMENT OF TRANSPORTATION

Federal Aviation Administration

14 CFR Part 39

[Docket No. FAA–2010–0126; Directorate Identifier 2010–NM–015–AD; Amendment 39–16209; AD 2010–04–16]

RIN 2120–AA64

Airworthiness Directives; SICLI Halon 1211 Portable Fire Extinguishers as Installed on Various Airplanes and Rotorcraft

AGENCY: Federal Aviation Administration (FAA), Department of Transportation (DOT).

ACTION: Final rule; request for comments.

SUMMARY: We are adopting a new airworthiness directive (AD) for the products listed above. This AD results from mandatory continuing airworthiness information (MCAI) originated by an aviation authority of another country to identify and correct an unsafe condition on an aviation product. The MCAI describes the unsafe condition as:

The Civil Aviation Authority of the United Kingdom (UK) has informed EASA [European Aviation Safety Agency] that significant quantities of Halon 1211 gas, determined to be outside the required specification, have been supplied to the aviation industry for use in fire extinguishing equipment. * * *

* * * * *

* * * This Halon 1211 has subsequently been used to fill P/N [part number] 1708337B4 portable fire extinguishers that are now likely to be installed in or carried on board aircraft.

The contaminated nature of this gas, when used against a fire, may provide reduced fire suppression, endangering the safety of the aircraft and its occupants. In addition,

extinguisher activation may lead to release of toxic fumes, possibly causing injury to aircraft occupants.

* * * * *

This AD requires actions that are intended to address the unsafe condition described in the MCAI.

DATES: This AD becomes effective March 8, 2010.

We must receive comments on this AD by April 5, 2010.

ADDRESSES: You may send comments by any of the following methods:

- *Federal eRulemaking Portal:* Go to *http://www.regulations.gov.* Follow the instructions for submitting comments.
- *Fax:* (202) 493–2251.
- *Mail:* U.S. Department of Transportation, Docket Operations, M–30, West Building Ground Floor, Room W12–140, 1200 New Jersey Avenue, SE., Washington, DC 20590.
- *Hand Delivery:* U.S. Department of Transportation, Docket Operations, M–30, West Building Ground Floor, Room W12–40, 1200 New Jersey Avenue, SE., Washington, DC, between 9 a.m. and 5 p.m., Monday through Friday, except Federal holidays.

Examining the AD Docket

You may examine the AD docket on the Internet at *http://www.regulations.gov;* or in person at the Docket Operations office between 9 a.m. and 5 p.m., Monday through Friday, except Federal holidays. The AD docket contains this AD, the regulatory evaluation, any comments received, and other information. The street address for the Docket Operations office (telephone (800) 647–5527) is in the **ADDRESSES** section. Comments will be available in the AD docket shortly after receipt.

FOR FURTHER INFORMATION CONTACT: *For transport airplanes:* Dan Rodina, Aerospace Engineer, International Branch, ANM–116, Transport Airplane Directorate, FAA, 1601 Lind Avenue, SW., Renton, Washington 98057–3356; telephone (425) 227–2125; fax (425) 227–1149.

For small airplanes: Leslie B. Taylor, Aerospace Engineer, Standards Staff, Small Airplane Directorate, FAA, 901 Locust Street, Room 301, Kansas City, MO 64106; telephone (816) 329–4134; fax (816) 329–4090.

For rotorcraft: DOT/FAA Southwest Region, J.R. Holton, Jr., ASW–112, Aviation Safety Engineer, Rotorcraft Directorate, Safety Management Group, 2601 Meacham Blvd., Fort Worth, TX 76137; telephone (817) 222–4964; fax (817) 222–5961.

SUPPLEMENTARY INFORMATION:

Discussion

The European Aviation Safety Agency (EASA), which is the Technical Agent for the Member States of the European Community, has issued Airworthiness Directive 2009–0278, dated December 22, 2009, (referred to after this as "the MCAI"), to correct an unsafe condition for the specified products. The MCAI states:

> The Civil Aviation Authority of the United Kingdom (UK) has informed EASA that significant quantities of Halon 1211 gas, determined to be outside the required specification, have been supplied to the aviation industry for use in fire extinguishing equipment. Halon 1211 (BCF) is used in portable fire extinguishers, usually fitted or stowed in aircraft passenger cabins and flight decks.
>
> EASA published Safety Information Bulletin (SIB) 2009–39 on 23 October 2009 to make the aviation community aware of this safety concern.
>
> The results of the ongoing investigation have now established that LyonTech Engineering Ltd, a UK-based company, has supplied further consignments of Halon 1211 (BCF) to SICLI that do not meet the required specification. This Halon 1211 has subsequently been used to fill P/N [part number] 1708337B4 portable fire extinguishers that are now likely to be installed in or carried on board aircraft.
>
> The contaminated nature of this gas, when used against a fire, may provide reduced fire suppression, endangering the safety of the aircraft and its occupants. In addition, extinguisher activation may lead to release of toxic fumes, possibly causing injury to aircraft occupants.
>
> For the reason described above, this EASA AD requires the identification and removal from service of certain batches of fire extinguishers and replacement with serviceable units.

You may obtain further information by examining the MCAI in the AD docket.

FAA's Determination and Requirements of This AD

This product has been approved by the aviation authority of another country, and is approved for operation in the United States. Pursuant to our bilateral agreement with the State of Design Authority, we have been notified of the unsafe condition described in the MCAI and service information referenced above. We are issuing this AD because we evaluated all pertinent information and determined the unsafe condition exists and is likely to exist or develop on other products of the same type design.

Differences Between the AD and the MCAI

We have reviewed the MCAI and, in general, agree with their substance. But we might have found it necessary to use different words from those in the MCAI to ensure the AD is clear for U.S. operators and is enforceable. In making these changes, we do not intend to differ substantively from the information provided in the MCAI and related service information.

We might also have required different actions in this AD from those in the MCAI in order to follow FAA policies. Any such differences are highlighted in a Note within the AD.

FAA's Determination of the Effective Date

An unsafe condition exists that requires the immediate adoption of this AD. The FAA has found that the risk to the flying public justifies waiving notice and comment prior to adoption of this rule because contaminated Halon 1211 gas has been used to fill certain portable fire extinguishers that are now likely to be installed in or carried on board aircraft. Contaminated Halon 1211 gas, when used against a fire, may have reduced fire suppression capabilities, endangering the safety of the aircraft and its occupants. In addition, extinguisher activation may release toxic fumes, possibly causing injury to aircraft occupants. Therefore, we determined that notice and opportunity for public comment before issuing this AD are impracticable and that good cause exists for making this amendment effective in less than 30 days.

Comments Invited

This AD is a final rule that involves requirements affecting flight safety, and we did not precede it by notice and opportunity for public comment. We invite you to send any written relevant data, views, or arguments about this AD. Send your comments to an address listed under the **ADDRESSES** section. Include "Docket No. FAA–2010–0126; Directorate Identifier 2010–NM–015–AD" at the beginning of your comments. We specifically invite comments on the overall regulatory, economic, environmental, and energy aspects of this AD. We will consider all comments received by the closing date and may amend this AD because of those comments.

We will post all comments we receive, without change, to *http://www.regulations.gov,* including any personal information you provide. We will also post a report summarizing each substantive verbal contact we receive about this AD.

Authority for This Rulemaking

Title 49 of the United States Code specifies the FAA's authority to issue rules on aviation safety. Subtitle I,

section 106, describes the authority of the FAA Administrator. "Subtitle VII: Aviation Programs," describes in more detail the scope of the Agency's authority.

We are issuing this rulemaking under the authority described in "Subtitle VII, Part A, Subpart III, Section 44701: General requirements." Under that section, Congress charges the FAA with promoting safe flight of civil aircraft in air commerce by prescribing regulations for practices, methods, and procedures the Administrator finds necessary for safety in air commerce. This regulation is within the scope of that authority because it addresses an unsafe condition that is likely to exist or develop on products identified in this rulemaking action.

Regulatory Findings

We determined that this AD will not have federalism implications under Executive Order 13132. This AD will not have a substantial direct effect on the States, on the relationship between the national government and the States, or on the distribution of power and responsibilities among the various levels of government.

For the reasons discussed above, I certify this AD:

1. Is not a "significant regulatory action" under Executive Order 12866;
2. Is not a "significant rule" under the DOT Regulatory Policies and Procedures (44 FR 11034, February 26, 1979); and
3. Will not have a significant economic impact, positive or negative, on a substantial number of small entities under the criteria of the Regulatory Flexibility Act.

We prepared a regulatory evaluation of the estimated costs to comply with this AD and placed it in the AD docket.

List of Subjects in 14 CFR Part 39

Air transportation, Aircraft, Aviation safety, Safety.

Adoption of the Amendment

■ Accordingly, under the authority delegated to me by the Administrator, the FAA amends 14 CFR part 39 as follows:

PART 39—AIRWORTHINESS DIRECTIVES

■ 1. The authority citation for part 39 continues to read as follows:

Authority: 49 U.S.C. 106(g), 40113, 44701.

§ 39.13 [Amended]

■ 2. The FAA amends § 39.13 by adding the following new AD:

2010–04–16 SICLI (formerly General Incendie MAIP): Amendment 39–16209. Docket No. FAA–2010–0126; Directorate Identifier 2010–NM–015–AD.

Effective Date

(a) This airworthiness directive (AD) becomes effective March 8, 2010.

Affected ADs

(b) None.

Applicability

(c) This AD applies to Type H1–10 AIR Halon 1211 (BCF) portable fire extinguishers manufactured by SICLI, having part number (P/N) 1708337B4 and having any serial number listed in Table 1 of this AD. These fire extinguishers may be installed on (or carried or stowed on board) various airplanes and rotorcraft, certificated in any category, identified in but not limited to the airplanes and rotorcraft of the manufacturers included in Table 2 of this AD, all type-certificated models.

TABLE 1—SERIAL NUMBERS OF AFFECTED SICLI FIRE EXTINGUISHERS, P/N 1708337B4

Serial Nos.
0843113 and 0843114.
0843329, 0843330 and 0843331.
0843333 through 0843339 inclusive (incl.).
0843341 through 0843350 incl.
0843352 through 0843358 incl.
0843360 through 0843369 incl.
0843372.
0843374 through 0843386 incl.
0843388.
0843390 through 0843407 incl.
0843409 through 0843464 incl.
0843466 through 0843468 incl.
0843470 and 0843471.
0843473.
0843475.
0843477.
0843479 through 0843487 incl.
0843489 through 0843522 incl.
0843524 through 0843552 incl.
0843554 through 0843561 incl.
0843563.
0843565 through 0843574 incl.
0843579 through 0843587 incl.
0843589 through 0843629 incl.
0843631 through 0843676 incl.
0843679 through 0843700 incl.
0843702 through 0843737 incl.
0843739 through 0843780 incl.
0843782 through 0843845 incl.
0843847 and 0843848.
0843850 through 0843856 incl.
0843858 through 0843861 incl.
0843863 through 0843878 incl.
0843879 through 0843902 incl.
0843904 through 0843934 incl.
0843936 through 0843951 incl.
0843953 through 0843957 incl.
0843959 through 0843969 incl.
0843971.
0843973 through 0843977 incl.
0843979 through 0843982 incl.
0843984, 0843985 and 0843986.
0843988 through 0844016 incl.
0844018 through 0844043 incl.
0844045 and 0844046.
0844048 and 0844049.

TABLE 1—SERIAL NUMBERS OF AFFECTED SICLI FIRE EXTINGUISHERS, P/N 1708337B4—Continued

Serial Nos.
0844051 through 0844069 incl.
0844071 through 0844077 incl.
0844079 through 0844109 incl.
0844111 and 0844112.
0844115 through 0844119 incl.
0844121 through 0844125 incl.
0844127 through 0844161 incl.
0844163 through 0844190 incl.
0844192 and 0844193.
0844195.
0844197.
0844199 through 0844218 incl.
0844220 through 0844225 incl.
0844228 through 0844240 incl.
0844242 through 0844249 incl.
0844253 through 0844257 incl.
0844259 through 0844263 incl.
0844265 through 0844267 incl.
0844269 through 0844280 incl.
0844282 through 0844286 incl.
0844288 and 0844289.
0844291 through 0844303 incl.
0844305 through 0844317 incl.
0844319 through 0844332 incl.
0844334 through 0844337 incl.
0844339 through 0844376 incl.
0844379 through 0844398 incl.
0844400 and 0844401.
0844403 through 0844415 incl.
0844417 through 0844422 incl.
0844424 through 0844428 incl.
0844430 through 0844436 incl.
0844439 through 0844450 incl.
0844452 through 0844454 incl.
0844456 through 0844470 incl.
0844472 through 0844475 incl.
0844477 through 0844494 incl.
0844496 through 0844512 incl.
0844514 through 0844518 incl.
0844520 through 0844524 incl.
0844526.
0844528.
0844530.
0844534.
0844536 through 0844568 incl.
0844570 through 0844592 incl.
0844594 through 0844619 incl.
0844621 through 0844626 incl.
0844628 through 0844635 incl.
0844637 through 0844660 incl.
0844663 through 0844666 incl.
0844668.
0844670 through 0844673 incl.
0844676 through 0844685 incl.
0844687 through 0844692 incl.
0844694 through 0844702 incl.
0844704 through 0844708 incl.
0844710 through 0844723 incl.
0844725 through 0844730 incl.
0844732 through 0844741 incl.
0844743 through 0844747 incl.
0844749 through 0844771 incl.
0844773 through 0844778 incl.
0844781 through 0844792 incl.
0844794 through 0844801 incl.
0844803 through 0844837 incl.

TABLE 2—AFFECTED AIRPLANES AND ROTORCRAFT

Manufacturer
Airbus.
ATR—GIE Avions de Transport Régional.
The Boeing Company.
Bombardier, Inc.
Cessna Aircraft Company.
Dassault-Aviation.
Empresa Brasileira de Aeronautica S.A. (EMBRAER).
Eurocopter Canada Limited.
Eurocopter Deutschland GMBH (ECD).
Eurocopter France.
McDonnell Douglas Corporation.

Subject

(d) Air Transport Association (ATA) of America Code 26: Fire Protection.

Reason

(e) The mandatory continuing airworthiness information (MCAI) states:

The Civil Aviation Authority of the United Kingdom (UK) has informed EASA [European Aviation Safety Agency] that significant quantities of Halon 1211 gas, determined to be outside the required specification, have been supplied to the aviation industry for use in fire extinguishing equipment. Halon 1211 (BCF) is used in portable fire extinguishers, usually fitted or stowed in aircraft passenger cabins and flight decks.

EASA published Safety Information Bulletin (SIB) 2009–39 on 23 October 2009 to make the aviation community aware of this safety concern.

The results of the ongoing investigation have now established that LyonTech Engineering Ltd, a UK-based company, has supplied further consignments of Halon 1211 (BCF) to SICLI that do not meet the required specification. This Halon 1211 has subsequently been used to fill P/N [part number] 1708337B4 portable fire extinguishers that are now likely to be installed in or carried on board aircraft.

The contaminated nature of this gas, when used against a fire, may provide reduced fire suppression, endangering the safety of the aircraft and its occupants. In addition, extinguisher activation may lead to release of toxic fumes, possibly causing injury to aircraft occupants.

For the reason described above, this EASA AD requires the identification and removal from service of certain batches of fire extinguishers and replacement with serviceable units.

Compliance

(f) You are responsible for having the actions required by this AD performed within the compliance times specified, unless the actions have already been done.

Actions

(g) Within 90 days after the effective date of this AD, replace all Type H1–10 AIR Halon 1211 (BCF) portable fire extinguishers manufactured by SICLI, having P/N 1708337B4 and having any serial number listed in Table 1 of this AD, with serviceable fire extinguishers.

(h) Within 90 days after doing any replacement required by paragraph (g) of this AD, return the affected fire extinguisher to: SICLI, ZI la Saunière, 89600 Saint Florentin, France; telephone: +33 (0)3 8643 7930; fax: +33 (0)3 8635 3632; e-mail *jerome.villette@sicli.com;* Web site: *http://www.sicli.com.*

(i) As of the effective date of this AD, do not install any SICLI fire extinguisher having P/N 1708337B4 and a serial number listed in Table 1 of this AD, on any airplane or rotorcraft.

FAA AD Differences

Note 1: This AD differs from the MCAI and/or service information as follows:

(1) EASA AD 2009–0278, dated December 22, 2009, specifies a time of 30 days to do the actions. This AD requires that the actions be done within 90 days. We have determined that a 90-day compliance time will ensure an acceptable level of safety.

(2) EASA AD 2009–0278 includes fire extinguishers having certain serial numbers in its applicability. The EASA AD also includes a requirement to inspect to determine if the fire extinguishers have those serial numbers and replacement if necessary. Since the affected fire extinguishers are part of the applicability, it is not necessary to also require inspecting for them. Therefore, this AD includes fire extinguishers having certain serial numbers in its applicability and does not include an additional requirement to inspect for serial numbers; this AD requires replacement of all affected fire extinguishers.

Other FAA AD Provisions

(j) The following provisions also apply to this AD:

(1) Alternative Methods of Compliance (AMOCs): The manager of the office having certificate responsibility for the affected product has the authority to approve AMOCs for this AD, if requested using the procedures found in 14 CFR 39.19. Before using any approved AMOC on any aircraft to which the AMOC applies, notify your principal maintenance inspector (PMI) or principal avionics inspector (PAI), as appropriate, or lacking a principal inspector, your local Flight Standards District Office. The AMOC approval letter must specifically reference this AD.

(i) For transport airplanes: Send information to ATTN: Dan Rodina, Aerospace Engineer, International Branch, ANM–116, Transport Airplane Directorate, FAA, 1601 Lind Avenue, SW., Renton, Washington 98057–3356; telephone (425) 227–2125; fax (425) 227–1149.

(ii) For small airplanes: Send information to ATTN: Leslie B. Taylor, Aerospace Engineer, Standards Staff, Small Airplane Directorate, FAA, 901 Locust Street, Room 301, Kansas City, MO 64106; telephone (816) 329–4134; fax (816) 329–4090.

(iii) For rotorcraft: Send information to ATTN: DOT/FAA Southwest Region, J.R. Holton, Jr., ASW–112, Aviation Safety Engineer, Rotorcraft Directorate, Safety Management Group, 2601 Meacham Blvd., Fort Worth, TX 76137; telephone (817) 222–4964; fax (817) 222–5961.

(2) Airworthy Product: For any requirement in this AD to obtain corrective actions from a manufacturer or other source, use these actions if they are FAA-approved. Corrective actions are considered FAA-approved if they are approved by the State of Design Authority (or their delegated agent). You are required to assure the product is airworthy before it is returned to service.

(3) Reporting Requirements: For any reporting requirement in this AD, under the provisions of the Paperwork Reduction Act (44 U.S.C. 3501 *et seq.*), the Office of Management and Budget (OMB) has approved the information collection requirements and has assigned OMB Control Number 2120–0056.

Related Information

(k) Refer to MCAI EASA Airworthiness Directive 2010–0278, dated December 22, 2009, for related information.

Material Incorporated by Reference

(l) None.

Issued in Washington, DC, on February 4, 2010.

Kalene C. Yanamura,

Acting Director, Aircraft Certification Service.

[FR Doc. 2010–3223 Filed 2–18–10; 8:45 am]

BILLING CODE 4910–13–P

DEPARTMENT OF TRANSPORTATION

Federal Aviation Administration

14 CFR Parts 121, 125, and 135

[Docket No. FAA–2006–26135; Amendment Nos. 121–347, 125–59, and 135–120]

RIN 2120–AI79

Filtered Flight Data

AGENCY: Federal Aviation Administration (FAA), DOT.

ACTION: Final rule.

SUMMARY: The FAA amends digital flight data recorder regulations affecting certain air carriers and operators. This final rule prohibits the filtering of some original flight recorder sensor signals unless a certificate holder can show that the data can be accurately reconstructed. This final rule improves the integrity and quality of the data recorded on digital flight data recorders while giving aircraft designers and operators more flexibility in system design and operation where allowable.

DATES: These amendments become effective April 20, 2010.

FOR FURTHER INFORMATION CONTACT: For technical questions concerning this final rule contact Brian A. Verna, Avionics Systems Branch, Aircraft Certification Service, AIR–130, Federal Aviation Administration, 800 Independence Avenue, SW., Washington, DC 20591;

telephone (202) 385–4643; fax (202) 385–4651; e-mail *brian.verna@faa.gov*. For legal questions concerning this final rule contact Karen L. Petronis, Senior Attorney for Regulations, Regulations Division, Office of the Chief Counsel, AGC–200, Federal Aviation Administration, 800 Independence Avenue, SW., Washington, DC 20591; telephone (202) 267–3073; fax 202–267–7971; e-mail *karen.petronis@faa.gov*.

SUPPLEMENTARY INFORMATION:

Authority for This Rulemaking

The FAA's authority to issue aviation safety rules is found in Title 49 of the United States Code. Subtitle I, Section 106 describes the authority of the FAA Administrator. Subtitle VII, Aviation Programs, describes in more detail the scope of the agency's authority.

This rulemaking is promulgated under the authority described in Subtitle VII, Part A, Subpart III, Section 44701. Under that section, the FAA is charged with prescribing regulations providing minimum standards for other practices, methods and procedures necessary for safety in air commerce. This regulation is within the scope of that authority since flight data recorders are the only means available to account for aircraft movement and flight crew actions critical to finding the probable cause of incidents or accidents, including data that could prevent future incidents or accidents.

I. Background

A. Statement of the Problem

During several aircraft accident investigations, the National Transportation Safety Board (NTSB) found that some flight data recorder systems were filtering flight recorder sensor signals before they were recorded. As a result, the recorded data did not accurately reflect the aircraft's performance or the movements of the flight control systems before and during the accident or incident under investigation. Such signal filtering both hampered and delayed the investigations. Throughout the investigation of American Airlines Flight 587 (Flight 587), which crashed after takeoff from John F. Kennedy Airport, Jamaica, New York in November 2001, the NTSB expended significant time and resources trying to recreate the performance and movements of the flight controls of the accident aircraft.

In November 2003, the NTSB issued three recommendations (NTSB Recommendations A–03–48/A–03–49/A–03–50, November 6, 2003) on digital flight data recorder (DFDR) recording requirements. The NTSB recommended that the FAA require all aircraft to have a DFDR system installed "capable of recording values that meet the accuracy requirements through the full dynamic range of each parameter at a frequency sufficient to determine a complete, accurate, and unambiguous time history of parameter activity, with emphasis on capturing each parameter's dynamic motion at the maximum rate possible, including reversals of direction at the maximum rate possible."

B. Action by the FAA—Notice of Proposed Rulemaking

In 2006, the FAA issued a notice that proposed a prohibition on filtering certain original flight data sensor signals (November 15, 2006, 71 FR 66634). The 2006 NPRM contains a complete discussion of the proposal and the events leading up to it.

The comments received in response to the 2006 NPRM alerted the FAA to several features of the proposed prohibition that would have had significantly more impact than the agency had expected. The issue that produced the most comment was the proposed definition of filtering, which described filtering as a change to any original sensor signal for any reason other than the three specified in the proposal. The comments indicated that the level of signal processing that is in use on newer flight data systems no longer corresponds to more traditional concepts of filtering, and leaves in question whether current system designs would be considered to be filtering data before recording.

As the FAA considered changes to the definition of filtering, the agency continued studying what is quickly becoming the standard in electronic signal processing. Our intent in the 2006 NPRM was to prohibit the processing of certain flight data sensor signals that would result in inaccurate data being preserved, as happened with the rudder movement data on Flight 587.

The investigation following the crash of Flight 587 indicated that the issue was not that data were filtered, but that the actual rudder movement data could not be reconstructed once processed by installed filtering devices. While a prohibition like our 2006 proposal would solve the problem, current capabilities suggested that when properly processed and documented, data can be reconstructed from a system design that incorporates filtering.

C. Action by the FAA—Supplemental Notice of Proposed Rulemaking

The determination that flight recorder systems from which data may be reconstructed were acceptable exceeded the scope of the changes in the 2006 NPRM. Accordingly, the FAA issued a supplemental notice of proposed rulemaking (August 15, 2008, 73 FR 47857)(SNPRM). The SNPRM proposed that recording of filtered flight data be allowed if a certificate holder could demonstrate that the 'filtered' recorded data meet the recording requirements of the regulations, and that the original sensor signal data could be accurately reconstructed using a documented, repeatable process.

In the SNPRM, the FAA changed its position from a strict filtering prohibition to one of conditional allowance that distinguishes between two groups of flight recorder parameters. The first group contained those that are prohibited from being filtered unless a certificate holder can demonstrate that it has done the tests and analyses and maintains the procedures necessary to reconstruct the original sensor signal values from the filtered recorded data. The second group included those parameters whose signals may be filtered without further action as long as they meet the requirements of the regulations.

The option not to filter any or all parameters remained an acceptable means of compliance with the regulations. In all cases, the accuracy and all other requirements of Appendix M of part 121 (or Appendix E of part 125 or Appendix F of part 135) must continue to be met. The ability to reconstruct data would not forgive any appendix requirement for any parameter.

The proposed time for compliance in the SNPRM was four years after the effective date of the final rule. Within that four-year period, one of two things was to happen.

If an operating certificate holder elected not to filter any of the restricted parameters, it had four years to test its DFDR systems, verify that none of the restricted parameters are being filtered, or, if a restricted parameter is being filtered, modify that parameter to eliminate the filtering.

If a certificate holder chose to filter a restricted parameter and show by test and analyses that the originating signal can be reconstructed, the procedures for reconstruction would have to be submitted to the FAA after the next heavy maintenance check of an airplane (beginning six months after the effective date of the final rule), but not later than two years after the effective date of the final rule. If a certificate holder has several of the same make, model and series airplane (group) with the same certificated DFDR system installed, the

procedures need only be submitted once for the entire group of airplanes with identically installed systems. The compliance date for a group would be tied to the first airplane going in for a heavy maintenance check six months after the rule is final. Submission of the data to the FAA would be required no later than the time the first airplane of a group completes that heavy maintenance check.

This compliance schedule was intended to allow time for the FAA to determine that the submitted reconstruction procedures are repeatable, but still allow time for other compliance action (within the four years) if repeatability was not accomplished. A certificate holder that was unable to show repeatability for any restricted parameter would be required to modify the parameter to eliminate filtering before the four year compliance period ends.

We did not include in the rule text a time limit for submission of the reconstruction procedures to the NTSB following an accident or occurrence that requires the NTSB be notified. We presumed that the reconstruction data are included as part of the recorder and its data that are subject to § 121.344(i) and the NTSB's authority under 49 CFR part 830. We invited comment on whether a specific, brief time for submission needs to be included separately in the rule for the reconstruction procedure data.

The SNPRM contains a more complete discussion of the proposal.

Following publication of the SNPRM, industry members contacted the FAA indicating that the economic evaluation did not reflect the effect of the proposed rule language. The SNPRM stated that a certificate holder could not filter data unless the recorded values complied with Appendix M and the certificate holder possessed procedures to reconstruct original sensor signals. The FAA had intended to propose rule language that applies to certain parameters if the recorded values do not comply with Appendix M. If Appendix M requirements are not met, then the certificate holder would have the choice to either remove the filtering or show by test and analysis that the original, unfiltered values can be successfully reconstructed to meet the requirements of Appendix M. On November 13, 2008, we amended the SNPRM (73 FR 67115) by publishing a correction and extension of the comment period until December 29, 2008.

II. Discussion of Comments to the SNPRM

A. General Summary

The FAA received eight comments covering more than 30 issues in response to the SNPRM. The NTSB generally agreed with the proposed rule and urged adoption of a final rule. Airbus, Boeing Commercial Airplanes (Boeing), the Regional Airlines Association (RAA) and Astar Air Cargo, Inc. (Astar) agreed on the importance of recording unfiltered, accurate data, but did not agree with the SNPRM's approach to accomplish this goal. The General Aviation Manufacturers Association (GAMA) agreed with the rule as proposed and provided supplemental cost information. Two individual commenters expressed support for the rule as proposed.

B. Parameters Covered by the Filtering Prohibition

In the SNPRM, the FAA used the commenters' term "no filter list" to describe those parameters prohibited from being filtered. While not entirely accurate, the FAA continues to use "no filter list" when discussing these comments to prevent further confusion.

The SNPRM proposed the same "no filter list" as the 2006 NPRM with the addition of 14 parameters requested by the NTSB in its 2006 comment. The FAA included these additional parameters in proposed § 121.346(b)(1) because the NTSB stated that they would provide valuable data during accident investigation and should not be filtered.

Airbus and Boeing asked that the FAA remove all parameters from the "no filter list" except parameters 12–17 and 88 based on the complexity of current filtering techniques and the cost burden to industry associated with FDR system modifications. They cited specific cases where aircraft systems (such as an air data computer and an air data inertial reference unit) process data from multiple sources to be transmitted through an ARINC 429 data bus, and to be used by other aircraft systems, including the DFDR. Airbus identified parameters 2, 3, 4, 6, 7, 9, 26, 32, 42, 43, and 70 as coming from these multiple source systems. Boeing provided general information that supported the Airbus comment, and noted that significant cost and effort would be required to revise multiple aircraft systems to comply with the proposed rule. Airbus also raised the modification cost issue, although it did not provide any supporting cost data for the 11 parameters it suggested be removed from the proposed list. Boeing noted that it was not aware of any investigation that had been adversely affected by filtered data from the parameters it suggested be excluded, and thus could find no safety benefit that would balance the cost of the system revision.

Boeing provided specific information supporting its request to remove the parameters for heading (number 4) and engine thrust (number 9) from the "no filter list." Boeing noted that the Appendix M requirements for these two parameters indicate that the recorded values are to come from the primary flight crew reference. These data are smoothed for readability when displayed to the flight crew. Their being filtered is required in the appendices to parts 121, 125, and 135, and thus should not be included in the "no filter" list.

Boeing and Airbus stated that the acceleration outputs, parameters 5, 8, and 18, should not be included in the "no filter list." They argued that ARINC Characteristic 717 "Flight Data Recording and Recording Systems" specifies that accelerometer outputs be filtered in order to provide accurate and readable data to the DFDR. They stated that removing the ARINC-specified filtering would result in erroneous acceleration data due to aircraft vibration.

The FAA agrees with Boeing and Airbus that the parameters covered by the prohibition should be limited to flight control surface positions, flight control input positions and flight control input forces. Since parameters 1 through 4, 6, 7, 9, 26, 32, 43, 68, 70, and 77 are non-flight control parameters and are slower-changing parameters sampled at less than 4 Hertz (Hz), they are not negatively affected by filtering. Additionally, the FAA agrees with Boeing and Airbus regarding parameters 5, 8, and 18. Although these are more quickly changing parameters, without the filtering specified by ARINC 717, the accelerometers would provide unreadable data. The FAA has determined that there is no safety benefit in requiring reconstruction of the original sensor signal values for these parameters, and that the impact on industry would have been significantly greater than the FAA anticipated when they were proposed for inclusion.

The FAA has not changed its position on parameter 42 (throttle lever angle). Although it is only required to be sampled at 1 Hz, parameter 42 is a critical flight control input position parameter and remains subject to the filtering restriction.

Accordingly, the final rule does not restrict the filtering of the non-flight control parameters as discussed above.

Further, the FAA agrees with Boeing regarding the recording of primary flight crew reference for parameters 4 and 9, and the two parameters are not included in the filtering prohibition in the final rule.

C. Filtered Flight Data Signal Definition

In the SNPRM, the FAA proposed that a flight data recorder signal is considered filtered when an original sensor signal is changed in any way, other than changes necessary to:

(1) Accomplish analog to digital conversion of the signal,

(2) Format a digital signal into a DFDR compatible format; or

(3) Eliminate a high frequency component of a signal that is outside the operational bandwidth of the sensor.

Boeing requested an expansion of this definition that would allow the averaging of two or more data samples acquired at the same point in time from different sensors, which would provide the best available representation of that parameter.

Boeing and Airbus each recommended changes to the term "original sensor signal." Airbus recommended replacing it with the term "signal output from the original sensor system." Boeing recommended defining a sensor as a device that perceives deviations from a reference and converts them into signals or information that can be used by systems on the airplane. Boeing added that a sensor can be a system that accepts information from multiple points of measurement and processes this information into data useable by other airplane systems.

While the FAA disagrees with Boeing's request to expand the definition of a filtered flight data signal, the agency agrees with Boeing and Airbus that the concept of what constitutes an original sensor signal can be expanded within the regulatory definition. To address these concerns, material from the commenters will be incorporated as examples in FAA Advisory Circular 20–141B "Airworthiness and Operational Approval of Digital Flight Data Recorder Systems."

The FAA agrees with Boeing and Airbus that an original sensor signal can come from either a single sensor or a system that accepts multiple sensor inputs to provide accurate information to other aircraft systems. For example, the FAA does not consider it necessary to record every ring laser gyroscope input into the electronic flight instrument system, nor to directly record the output of an unfiltered accelerometer. The signal conditioning and filtering techniques used to record parameters 2, 3, 4, 6, 7, 9, 26, 32, 43, and 70 are necessary to provide accurate data for several aircraft systems, only one of which is the flight recorder system. The redesigning of aircraft critical systems or the significant alteration of current instruments from which data are gathered was not the intent of the proposed rule, and would be outside the scope of this rulemaking.

D. Reconstruction of Filtered Data

Shortly after the close of the comment period for the 2006 NPRM, the FAA learned of technological developments that would allow the reconstruction of data that had been filtered before they were recorded. The FAA determined that this option should be made available to operators rather than the simple prohibition proposed in the 2006 NPRM. That decision led to the publication of the SNPRM in 2008, which proposed to allow filtering if data could be reconstructed, and requested comment on several issues related to the ability to reconstruct.

Boeing commented that, with regard to parameters that are sampled at one second or slower, reconstruction would be both "unrealistic and problematic" and suggested that the option of reconstruction not be included in the final rule. Boeing noted that for some parameters, the data are conditioned at the microsecond level. When sampled at once per second, the conditioned inputs are nonexistent and not subject to reconstruction.

The FAA understands Boeing's concern and agrees that, under the circumstances stated, the data would not be available for reconstruction. The agency presumes from Boeing's comment that its position is based on the assumption that the conditioned data would be considered filtered under the FAA's proposed definition, making it both subject to the prohibition yet impossible to reconstruct. However, from the examples presented to the FAA by Boeing, the type of conditioning taking place would not be considered filtering under the proposed definition, and thus not subject to the prohibition or the reconstruction option. The option to reconstruct filtered data remains in this final rule. The reconstruction of filtered flight data has been proven to be effective for rapidly changing parameters (sampled at four or more times per second).

Astar noted that the requirement to maintain DFDR data appears in § 121.344(i), while the filtering requirement is being moved to new § 121.346. Astar commented that the separation of the requirements makes the proposed language (including the phrase "of this section") inaccurate.

The FAA agrees. The new § 121.346(c)(2)(ii) references § 121.344(i) as a requirement for reconstruction documentation.

The GAMA requested that the FAA provide further guidance regarding the type of documentation an operator must possess to demonstrate compliance with the proposed regulation. The GAMA noted that part 135 operators generally do not operate large fleets of similar airplanes, and thus a simple approach to documentation is needed.

The FAA agrees on the need for simple compliance documentation. As discussed in more detail below, each operator will be responsible for creating a record for each of its airplanes indicating its compliance status with this rule, including a reference to any parameters being filtered. The FAA anticipates that much of this analysis will be available from the original equipment manufacturers. A record of each airplane's status regarding filtering is to be maintained as part of the flight data recorder correlation documentation already required. Compliance with the requirements for reconstruction data, including record maintenance, will be more complex if filtering is found and the reconstruction option is chosen. Detailed information regarding the content and maintenance of that data will be available in FAA Advisory Circular 20–141B "Airworthiness and Operational Approval of Digital Flight Data Recorder Systems."

E. Appendix M

1. Introductory Text

In both the 2006 NPRM and 2008 SNPRM, the FAA proposed the following language to clarify "dynamic condition" as used in the introductory text to part 121 Appendix M (and comparable appendices in other parts):

"Dynamic condition means the parameter is experiencing change at the maximum rate available, including the maximum rate of reversal."

In its comments on both proposals, the NTSB requested the language be revised to state the "maximum rate possible." The NTSB stressed the importance of having recording systems capable of accurately recording motion rates typically experienced during an accident sequence.

In its comment to the SNPRM, Boeing requested that the language be eliminated. Boeing stated that the prohibition in proposed § 121.346 eliminates the need for the introductory text in the appendices. In the alternative, Boeing suggested that the

introductory text be revised to read: "[d]ynamic condition means the parameter is experiencing change at the maximum rate the source system can cause by design, including the maximum rate of reversal." Boeing interprets dynamic condition to be both fundamental to the design of and unique to the function of each aircraft system.

Airbus requested that the introductory text be revised to read: "[d]ynamic condition means the parameter is experiencing change at the maximum rate under operational conditions, including maximum rate of reversal." Airbus was concerned that the proposed language went beyond the operational limits of actual systems, and further suggested that the language be moved from the appendix to § 121.344.

The FAA has decided that the introductory text of the appendices will refer to the "maximum rate attainable." Following much debate, the term attainable appears to satisfy the commenters' concerns, including the design limitations of a specific source system.

In the SNPRM, the FAA noted that the NTSB did not provide any rationale for its suggested change to "maximum rate possible" and the agency could not conclude that it was an improvement. Since the word "possible" could be interpreted to include states that are well beyond the operational range of equipment, the suggested change appeared inappropriate as a regulatory standard.

Additional guidance will be included in FAA Advisory Circular 20–141B "Airworthiness and Operational Approval of Digital Flight Data Recorder Systems."

Finally, the FAA does not agree that the introductory text should be relocated to § 121.344. The text refers to requirements for each parameter as listed in the appendix. Separating it from the appendix requirements would cause unnecessary confusion.

2. "Accuracy (Sensor Input)" Column in Appendix M

Boeing stated that the appendix column titled "Accuracy (Sensor input)" is ambiguous in terms of what constitutes accuracy and how accuracy is measured. Boeing submitted its own definition of the term "accuracy" based on its suggested definition of the term "sensor" (discussed above). Boeing described its understanding of accuracy as being the relationship between the actual entity being measured and the recorded position of that entity within a stated range.

Airbus requested that the FAA provide values for the maximum dynamic error allowable for each parameter in the appendices. Airbus added that the amount of dynamic error is dependent on the sampling rate and the operational condition of an individual aircraft.

The FAA disagrees with adding a definition of accuracy or adding maximum dynamic error in the appendices. The accuracy column has been present in the regulation since its adoption in 1997 and has not been an identified source of confusion. Further, the FAA did not propose any changes to accuracy specifications, making these suggested changes outside the scope of this rulemaking. Except for the change to the term "maximum rate attainable" in the introductory text, no other changes to the appendices are being adopted in this final rule. The FAA will expand its discussion of how accuracy is measured in the update to the advisory circular material based on material submitted by the commenters.

3. Expansion of Appendix M

Boeing requested that Appendix M include a table defining each parameter's primary and secondary purposes, whether or not it should be filtered, and from what source it should be recorded.

The FAA considers an additional table in Appendix M to be inappropriate and beyond the scope of this rulemaking. Other than a clarification of the language in the introductory text, no changes to Appendix M were proposed. Compliance with Appendix M remains unchanged.

Astar requested that the parameters affected by this rule be identified by an additional column in the appendices. Astar also found the placement of the filtering prohibition in § 121.346 (rather than § 121.344) to be misleading.

The FAA does not agree with Astar that an additional column in the appendices is necessary. The filtering prohibition was moved to a separate regulatory section in order to highlight its importance and prevent it from being overlooked in the extensive requirements already present in § 121.344. No changes have been made based on this comment.

F. Applicability

1. Existing and Newly Manufactured Aircraft

In the SNPRM, we proposed that the filtered flight data prohibition apply to both existing and newly manufactured aircraft. Airbus and the RAA agreed with the approach to allow filtering if an operator can demonstrate accurate, repeatable reconstruction of an original sensor signal. However, they stated that any final rule should only apply to newly manufactured airplanes or airplanes on which Supplemental Type Certificate (STC) changes to the flight recorder system have been installed.

Airbus noted that such application of the rule would be less costly since manufacturers would be able to combine new designs into other flight recorder system improvements.

The RAA stated that the safety concerns raised by the FAA are issues applicable to the design and certification processes, making the solution better suited to be applicable only to newly manufactured airplanes.

As we stated in the 2006 NPRM and the SNPRM, the FAA considered the regulatory alternative of limiting the filtering prohibition to newly manufactured aircraft. While this approach is always less costly than a rule that affects the in-service fleet, it would also fail to address the aircraft currently operating with flight recorder systems that filter critical flight data before recording it. The FAA is also concerned that failing to cover in-service aircraft could lead to more filtering, which could result from future system modifications on in-service aircraft not subject to the prohibition.

Experience has shown that filtering has caused problems during accident investigations. The FAA disagrees that the reconstruction efforts during the investigation of Flight 587 had an acceptable outcome. The NTSB has not released any formal opinion that the results from the Flight 587 data reconstruction were satisfactory, or that the processes involved in that data reconstruction were acceptable. The FAA recognizes that data reconstruction, when satisfactory from an accuracy standpoint and shown to be repeatable, is an acceptable alternative and has included it in this final rule. However, the agency cannot conclude that the problems uncovered by the Flight 587 investigation have been solved. Allowing airplanes to remain in the fleet while filtering critical data is not an acceptable alternative. Without this rule, there would be no requirement to develop and maintain accurate, repeatable processes for reconstructing data that are filtered before being recorded.

2. A300/A310 Airplanes

Airbus stated that on its A300–600 and A310 airplanes, parameters 15, 16, 17, and 19 are filtered under our proposed definition. Airbus noted that the filter conversion algorithms have been solved for the A300/A310 airplanes, concluding that the problem

will not occur again, unless a customer has chosen to change the recording system through an STC.

Astar stated its understanding that the FAA's reference to the A300 in the SNPRM is to the A300–600 model. Astar added that it operates the A300–B4B model airplane and has not identified data filtering during its review of research and engineering documentation. Astar requested that the final rule include a list of those aircraft that are not covered by the rule.

The RAA stated that there had to be "a more cost effective way to identify the DFDR's of concern without having every certificate holder "recertify" their product." The RAA also stated that since "the FAA has the certification data for the DFDR systems for all airplane types in operation," the agency should be able to determine specific aircraft types that "need not be recertified to the new standards."

As discussed above, the FAA finds it unacceptable to limit the applicability of this rule as suggested. The FAA does not know the identity of all models or the total number of airplanes that may be recording filtered data, and thus has no rational basis to restrict applicability. The FAA does not possess the engineering documentation required to evaluate the DFDR systems of all airplanes currently in operation. The requirement for each operator to assess the function of its airplanes with regard to filtering is a critical facet of this rule. This effort is not a recertification, as suggested. It is first a determination of system function. Once that determination is made, and if filtering is found, the operator will have the choice of how to comply with this rule. The FAA cannot ignore the possibility of an in-service airplane filtering critical data simply because the model is no longer in production. Similarly, limited applicability leaves open the possibility of future filtering by modifications made on airplanes that were not filtering when the rule took effect. The applicability of this final rule is adopted as proposed.

3. Part 91 Airplanes

The GAMA stated that the proposed regulation would have a significant cost and burden impact on the owners and operators of aircraft that are equipped with DFDRs as required under § 91.609. The GAMA noted that it is typical for an aircraft that operates under part 135 to begin and end its operating life cycle under part 91. For aircraft equipped with a flight recorder operating under part 91 and 135, the GAMA estimated that between 1,125 and 5,600 aircraft could be affected, resulting in a $2,000,000 to $9,000,000 impact on the general aviation community for no measurable benefit.

Neither the 2006 NPRM nor the SNPRM proposed any changes to part 91 requirements. The FAA cannot predict and would not have any basis for presuming how many or which airplanes might change operating parts, or who would be operating them. In addition, the costs of complying with this rule would be minimal when compared to the significant differences between part 91 and part 135 operating requirements overall. No change to the regulations is being made based on this comment.

G. Compliance Time

The SNPRM included a compliance time from six months to two years for an operator to develop, validate, and submit filtered data reconstruction procedures to the FAA. The proposed rule included a final compliance time of four years for airplanes manufactured up to 18 months after the effective date of a final rule.

Astar commented that the compliance time in the 2006 NPRM appears to be different from that in the SNPRM, and suggests that the time for demonstrating that an airplane's flight data recorder system is not filtering data is confusing.

The FAA understands the commenter's concerns and has reconsidered the language of the compliance time paragraph. The final rule includes the following compliance requirements.

Operators will have 18 months from the effective date of this rule (referenced in this discussion as the reporting date) to review their DFDR systems and create a record that indicates whether the DFDR system on each airplane is filtering any of the parameters included in the "no filter list." If any of those parameters are being filtered, the record must also indicate which are affected. If no parameters are being filtered, that record entry should be made at the time of the determination, and an operator need take no further action unless a change is made to a DFDR system. Records of this action are to be maintained as part of the flight data recorder correlation documentation already required by the regulations.

Operators that identify filtered parameters will have two options. If an operator chooses to remove the filtering, it has four years from the effective date (thirty months after the reporting date) to make the system modifications. If an operator chooses to demonstrate by tests and analyses that filtered data can be reconstructed, the operator has up to 18 months from the reporting date to submit its reconstruction package to the FAA for approval. This submission date accounts for the time needed for the FAA to review the tests and analyses and verify their repeatability.

In all cases, compliance with the rule is required four years from the effective date. In no case will the submission of reconstruction tests and analyses be considered compliance until that submission is approved by the FAA. Operators that choose that method of compliance are cautioned to submit their tests and analyses as early as possible in case their submissions fail to be approved and other action need be taken.

Operators may submit material from manufacturers for all showings required. However, for all 'group' submissions (all airplanes of a particular model, for example), the operator must indicate in its records that the manufacturer's verifications apply to a particular airplane's DFDR system and that the airplane's DFDR system has not been modified to remove it from the group characteristics with regard to data filtering. Entries must be made for individual airplanes, not for models as a group. The record must be maintained as part of the flight data recorder correlation documentation already required by the regulations.

These compliance times provide ample opportunity for certificate holders to make choices about their equipment and conduct any necessary analyses during a regularly scheduled heavy maintenance visit, reducing potential impact on scheduled operations or additional out-of-service time. Much of the initial work in determining whether filtering is present on restricted parameters does not require physical access to airplane systems, but may be determined by reference to the airplane's DFDR system engineering and maintenance documentation.

H. Cost/Benefit Analysis

In the regulatory evaluation for the 2008 SNPRM, the FAA estimated it would cost certificate holders a total of $28,160 to undertake a review of DFDR systems documentation to determine whether filtering were taking place. The FAA stated that it was unable to estimate any further impact of the proposed rule, since we had no data indicating the number of airplanes in the fleet that were filtering data, nor how much it would cost in any instance to correct. Commenters provided some cost information, as discussed below, but none provided data related to developing reconstruction procedures.

1. Airbus A300/A310 Retrofit Costs

Airbus estimated that, for its A300/A310 fleet, the engineering costs to correct the recording of filtered data for parameters 12 through 17 and 88 would be about $750,000. In addition, equipment to make each airplane compliant with the rule would cost between $25,000 and $40,000 per airplane, for a total of $26 million to $46 million for the U.S. Airbus fleet. Airbus indicated that these were costs of this proposal.

The FAA reiterates the findings from the SNPRM that the cost to correct the DFDR systems on the Airbus A300/310 to comply with the existing Appendix M requirements is not a cost of this rule. Even though the 1997 regulations do not specifically prohibit filtering, the Flight 587 investigation discovered that the airplane's recorded data did not meet the accuracy performance requirements of Appendix M. Consequently, the compliance cost estimated by Airbus is the cost of complying with Appendix M, which has been in effect since 1997. This compliance cost would be incurred whether we had ever proposed a rule change regarding filtering because the aircraft did not comply with Appendix M. This rule does not change compliance with Appendix M. It simply provides an option of how compliance may be met: whether the data are recorded unfiltered or are filtered and can be reconstructed.

2. Original Equipment Manufacturer Versus Operator Costs

Boeing stated that many operators would not be able to determine which parameters are filtered. Boeing added that the operators depend on the manufacturer to identify conditioned parameters and provide reconstruction procedures, if applicable. Boeing requested that the FAA account for these costs in the regulatory evaluation.

The FAA agrees that operating certificate holders would be expected to consult with the original manufacturers of their equipment to identify which (if any) DFDR parameters are being filtered. The list of parameters that must be evaluated is now limited to flight control surface positions, flight control input positions, flight control forces, and throttle lever position. The effort needed to identify whether any of these eight parameters are being filtered under the regulatory definition is included in the regulatory evaluation. The cost is assessed on the operator.

I. Changes Made Through Operating Rules

Astar agreed with Air Tran's 2006 comment that it is improper to use the operating rules of part 121 to impose technical requirements unique to a specific model of aircraft or unique to the design of an aircraft system. Astar noted that operators are not typically involved with the engineering of aircraft systems, and usually do not install or alter components. It considers data filtering to be a function of the DFDR system design and not the responsibility of the operators.

The FAA's position has not changed since responding to AirTran's comment in the 2008 SNPRM. The DFDR requirements are part of the operating rules. The only effective way to implement changes to in-service aircraft is through the operating rules, since the certification rules generally are not retroactive and do not include the specific requirements. This rule makes specific changes to certain flight recorder parameters, and those parameters exist as part of the regulations in parts 121, 125, and 135. A change made to the certification rules would not affect aircraft in service.

J. Miscellaneous Comments

1. DFDR System Review

Astar noted that the SNPRM stated if a certificate holder elects not to filter any of the restricted parameters, it has four years to test its DFDR systems and verify that none of the restricted parameters are being filtered. Astar stated that § 121.346(c) does not indicate that a certificate holder should test the DFDR system to confirm whether a parameter is filtered or not. Astar requested that the FAA remove the explanation of a DFDR system test when a review of engineering and maintenance documentation could be used to identify parameters that are filtered.

The FAA agrees that the SNPRM did not include a requirement for a certificate holder to test its DFDR system to confirm whether a parameter is filtered. The final rule includes a requirement for operators to review their DFDR systems and create a record that includes each of its airplanes indicating whether and which parameters are being filtered. The system review information may be acquired from the equipment manufacturer and a physical system test may not be necessary. If filtering is found, the means of compliance with this rule is also the choice of the operator.

2. Compliance Decision Diagram

Airbus submitted a complex decision diagram that illustrates its understanding of the proposed rule. Airbus stated that if the FAA did not agree with the logic of the diagram, Airbus would be unable to provide cost information associated with each parameter.

The FAA does not agree with the logic that underlies Airbus's decision diagram. Moreover, changes adopted in this final rule significantly affect Airbus's decision diagram. As will be detailed in the FAA's decision diagram in AC 20–141B, there is a straightforward approach to evaluating the parameters. First, only those parameters listed in § 121.346(c) need be evaluated to determine whether they are being filtered under the regulatory definition. Next, the certificate holder must determine if the recorded data meet the accuracy requirements of Appendix M. If they do not, the certificate holder needs to decide whether to attempt data reconstruction, or alter the DFDR system to record unfiltered data.

III. Final Rule Language

The structure of the final rule language differs from the proposals. In the proposed rules, we differentiated the group of parameters that could be filtered from those that could not. That distinction is no longer relevant.

Using part 121 as the example, § 121.346(a) contains the definition of filtering. Paragraph (b) states that any parameter may be filtered as long as the recorded value meets all of the requirements of Appendix M. Paragraph (c) specifies the eight critical flight control parameters discussed, and indicates that if any of those parameters are filtered, and because of the filtering does not meet the requirements of Appendix M, then the compliance option of reconstruction described in (c)(1)–(2) is available. A critical parameter that fails to meet Appendix M for some reason other than filtering that can be rectified by reconstruction is considered a violation of Appendix M and is not allowed under any part of the regulation.

This means that if any of the critical parameters is being filtered but nonetheless meets the requirements of Appendix M, no action is required. This is true for all other parameters as well. The only parameters not required to meet the Appendix M requirements are the eight critical ones, and then only if they can be satisfactorily reconstructed as required under paragraph (c) to meet Appendix M requirements.

IV. Regulatory Notice and Analysis

Paperwork Reduction Act

As required by the Paperwork Reduction Act of 1995 (44 U.S.C. 3507(d)), the FAA has submitted the information requirements associated with this proposal to the Office of Management and Budget for its review. According to the 1995 amendments to the Paperwork Reduction Act (5 CFR 1320.8(b)(2)(vi)), an agency may not collect or sponsor the collection of information, nor may it impose an information collection requirement unless it displays a currently valid OMB control number. The OMB control number for this information collection will be published in the **Federal Register**, after the Office of Management and Budget approves it.

International Compatibility

In keeping with U.S. obligations under the Convention on International Civil Aviation, it is FAA policy to comply with International Civil Aviation Organization (ICAO) Standards and Recommended Practices to the maximum extent practicable. The FAA has determined that there are no ICAO Standards and Recommended Practices that correspond to these regulations.

Regulatory Evaluation, Regulatory Flexibility Determination, International Trade Impact Assessment, and Unfunded Mandates Assessment

Changes to Federal regulations must undergo several economic analyses. First, Executive Order 12866 directs that each Federal agency shall propose or adopt a regulation only upon a reasoned determination that the benefits of the intended regulation justify its costs. Second, the Regulatory Flexibility Act of 1980 (Pub. L. 96–354) requires agencies to analyze the economic impact of regulatory changes on small entities. Third, the Trade Agreements Act (Pub. L. 96–39) prohibits agencies from setting standards that create unnecessary obstacles to the foreign commerce of the United States. In developing U.S. standards, the Trade Act requires agencies to consider international standards and, where appropriate, that they be the basis of U.S. standards. Fourth, the Unfunded Mandates Reform Act of 1995 (Pub. L. 104–4) requires agencies to prepare a written assessment of the costs, benefits, and other effects of proposed or final rules that include a Federal mandate likely to result in the expenditure by State, local, or Tribal governments, in the aggregate, or by the private sector, of $100 million or more annually (adjusted for inflation with base year of 1995). This portion of the preamble contains the FAA's analysis of the economic impacts of this rule.

In conducting these analyses, FAA has determined that this final rule: (1) Has benefits that justify its costs, (2) is not an economically "significant regulatory action" as defined in section 3(f) of Executive Order 12866, (3) is not "significant" as defined in DOT's Regulatory Policies and Procedures; (4) will not have a significant economic impact on a substantial number of small entities; (5) will not create unnecessary obstacles to the foreign commerce of the United States; and (6) will not impose an unfunded mandate on State, local, or Tribal governments, or on the private sector by exceeding the threshold identified above. These analyses are summarized as follows.

Total Benefits and Costs of This Rule

This rule allows certain sensor signals to be filtered only if either (1) the recorded data meet the requirements in the appropriate appendix, or (2) the certificate holder can show that the original sensor signal data can be reconstructed to meet those requirements. The final rule cost will be about $310,000, which has a present value of about $261,000 using a 7 percent discount rate and a present value of about $288,000 using a 3 percent discount rate. The benefits of this rule are that certificate holders will have an alternative means of compliance with the filtering regulations and that the NTSB will have more accurate DFDR data for its accident investigations.

Aviation Industry Affected

The rule applies to each aircraft operated under part 121, 125, or 135 that is required to have a DFDR system. These aircraft are operated primarily by scheduled air carriers and non-scheduled airplane and rotorcraft operators. Aircraft operated under other parts of Title 14 are not affected.

Assumptions

- Discount rate—7%. Sensitivity analysis was performed at 3% and 7% discount rates.
- Period of Analysis—2010–2011.
- Burdened labor rate for engineers and maintenance foremen—$83.12 per hour.[1]
- Rule issued on January 1, 2010.
- Costs are based on 2008 dollars.
- Manufacturers complete DFDR system analysis during 2010.
- Certificate holders report DFDR system information in each aircraft's correlation documentation during 2011.

Changes From the 2006 NPRM to the Final Rule

The 2006 NPRM had proposed to prohibit filtering certain original flight data sensor signals, which may have required certificate holders to redesign their DFDR systems to remove filtering. The final rule allows certain original flight data sensor signals to be filtered if the recorded data meet the accuracy requirements of the applicable appendix or, if they do not meet these requirements, that the certificate holder can show that the original flight data sensor signals can be reconstructed. The reconstruction procedures and test results must be submitted to the FAA and be validated to ensure that the required accuracy is being met and the process is repeatable.

Benefits of This Rule

The Flight 587 accident demonstrated the existence of a filtered data recording problem. The lack of accurate and complete recorded flight data hampered and delayed the accident investigation. The lack of data also introduced an element of uncertainty into the determination of the accident's cause.

Since the 2006 NPRM, comments received from the industry and our increasing understanding of the developments in data recording capability have led the FAA to conclude that data filtering, in and of itself, may not necessarily generate misleading or incomplete information that would inherently compromise an accident investigation. As long as the recorded sensor signal data meet the accuracy specifications, whether the data are filtered is not relevant to the progress of a subsequent accident investigation. However, as previously described, there are eight parameters that are too critical to accident investigation to allow them to be filtered freely. These recorded data may, if filtered, be misleading or incomplete and prevent a timely and thorough accident investigation. This final rule eliminates that possibility by requiring that, for those eight parameters, the aircraft DFDR system either (1) record unfiltered data, (2) record filtered data that meet the required accuracy specifications, or (3) record filtered data that can be reconstructed to recover the original unfiltered sensor signal values. So long as the applicable appendix requirements are met, this rule allows the certificate

[1] GRA, Incorporated, *Economic Values for FAA Investment and Regulatory Decisions, A Guide,* Final Report, September 30, 2008, Table 7–1A: 2008 Mean Burdened Hourly Labor Rates of Aeronautical Engineers and Aviation Mechanics, p. 7–3.

holder to select the lowest cost compliance alternative.

The primary benefit from this rule remains better, quicker, and less expensive accident investigations. Although the public comments provided no quantitative information about the possible benefits of this improved information, the NTSB believes that these benefits exist and the FAA agrees.

Costs of This Rule

Calculation of the costs of this rule begins with the presumption that each affected aircraft's DFDR system already records results that comply with the requirements in Appendix B or M of part 121, Appendix D or E of part 125, or Appendix F of part 135. These regulations were adopted in 1997, with compliance due no later than 2001. If an operator finds that it has aircraft that do not comply with the applicable 1997 appendix requirements, the costs to bring those aircraft into compliance would be a cost of the 1997 rule, not this final rule.

The initial action necessary to comply with this rule is an analysis of the aircraft DFDR system to determine whether data are being filtered. Most certificate holders do not have the technical capabilities to perform an engineering analysis of DFDR systems. However, aircraft manufacturers have the capability and the FAA anticipates that they will perform these analyses and provide the information to the certificate holders. The second action to comply with this rule will be for the certificate holder to create a report indicating the status of each airplane regarding filtering. That data must be maintained as part of the flight data recorder correlation data already required by the regulations.

Industry sources indicated to the FAA that these engineering analyses will require minimal time because most of the work was completed during the aircraft certification and is already in the possession of the manufacturers. For example, GAMA estimated that one of its operators would need 10 hours to complete this analysis for one of its aircraft models. The FAA determined that the average amount of time a manufacturer needs to gather the certification information, review it, complete an analysis and produce a service bulletin (or equivalent) is 25 hours for one aircraft model. Clearly, some of these analyses will take more than 25 hours while others (primarily those for more recently-certificated aircraft models) will simply require the manufacturer to review the results of these recent certification tests. Finally, for operators to comply with the 18-month requirement for reporting the DFDR system status to the FAA, the manufacturers will need to complete this process during 2010, which is the first year after issuing the final rule.

The FAA determined that there are 40 large transport category commercial airplane models affected by this rule. At a cost of $2,078 for each analysis (25 hours at $83.12 per hour), the total cost will be $83,120, which has a present value of $72,600 using a 7 percent discount rate, and a present value of $78,349 using a 3 percent discount rate.

There are 11 other jet airplane models certificated for 10 or more passengers that are used in part 135 non-scheduled operations. At a cost of $2,078 for an analysis, the total cost will be $22,858, which has a present value of $19,955 using a 7 percent discount rate, and a present value of $21,546 using a 3 percent discount rate.

There are 16 turboprop airplane models certificated for 10 or more passengers that are used in part 135 non-scheduled operations. At a cost of $2,078 for each analysis, the total cost will be $33,248, which has a present value of $29,040 using a 7 percent discount rate, and a present value of $31,339 using a 3 percent discount rate.

Finally, there are six rotorcraft models certificated for 10 or more passengers that are used in part 135 non-scheduled operations. At a cost of $2,078 for each analysis, the total cost will be $12,468, which has a present value of $10,890 using a 7 percent discount rate and a present value of $11,752 using a 3 percent discount rate.

Thus, as shown in Table 1, the total cost to manufacturers will be $151,694, which has a present value of $132,495 using a 7 percent discount rate and a present value of $142,986 using a 3 percent discount rate.

TABLE 1—TOTAL COSTS AND PRESENT VALUE COSTS FOR THE MANUFACTURER ANALYSES OF AIRCRAFT BY TYPE OF AIRCRAFT

[In 2008 dollars]

Type of aircraft	Total cost	Present value (at 7 percent)	Present value (at 3 percent)
Airplanes Used in Parts 121 and 125	$83,120	$72,600	$78,349
Jets Used in Part 135	22,858	19,965	21,546
Turboprops Used in Part 135	33,248	29,040	31,339
Rotorcraft Used in Part 135	12,468	10,890	11,752
Total	151,694	132,495	142,986

One issue that arose was the cost to perform these analyses for DFDR systems that have been sufficiently modified to require a supplemental type certificate. The FAA determined that this issue is not significant because such modifications are infrequent and generally do not provide any operational advantage.

However, each certificate holder has the ultimate responsibility to ensure that all of its aircraft DFDR systems are recording sensor signal data that meet the applicable range, resolution, and accuracy specifications. As discussed, although the manufacturer will provide its data to the certificate holder, each certificate holder must indicate, for each of its aircraft, the compliance status of that aircraft, including whether data from the manufacturer applies to individual aircraft. Thus, the certificate holder's incremental compliance cost is the paperwork cost to record the compliance status of its aircraft. The FAA anticipates that this notification will be made during the first half of 2011, the second year after the final rule is issued.

The FAA determined that, on average, it will take a certificate holder's maintenance foreman 15 minutes for a one-time total cost of $20.78 per aircraft to record in an aircraft's correlation documentation whether any data are being filtered.

There were 7,274 airplanes operated under parts 121 and 125 required to

have a DFDR system in 2008.[2] There were 43 jet airplanes, 269 turboprop airplanes and 37 rotorcraft operating in part 135 unscheduled service required to have a DFDR system in 2009.

On that basis, part 121 and 125 operators will incur recordation costs of $151,154, part 135 non-scheduled jet operators will incur recordation costs of $894, part 135 non-scheduled turboprop operators will incur recordation costs of $5,590, and part 135 non-scheduled helicopter operators will incur recordation costs of $769.

Thus, as shown in Table 2, the total cost to operators will be $158,406, which has a present value of $129,306 using a 7 percent discount rate, and a present value of $144,964 using a discount rate of 3 percent.

TABLE 2—TOTAL COSTS AND PRESENT VALUE COSTS FOR OPERATORS TO REPORT COMPLIANCE TO THE FAA DURING 2011

[In 2008 dollars]

Type of certificate holder	Total cost	Present value (at 7 percent)	Present value (at 3 percent)
Parts 121 and 125 Operators	$151,154	$123,386	$138,327
Non-Scheduled Jet	894	729	818
Non-Scheduled Turboprop	5,590	4,563	5,115
Rotorcraft	769	628	704
Total	158,406	129,306	144,964

There is a potential compliance cost if a manufacturer informs an operator that some of its aircraft DFDR systems are recording filtered flight data for any of the eight critical parameters. The final rule requires that if an operator is so informed, then the operator must evaluate each filtered parameter to ensure that the recorded data meet the requirements of the appropriate appendix. The cost of this evaluation is a cost of this final rule. Based on an FAA determination that such an evaluation will take four labor hours at a cost of $83.12 an hour to complete, the cost for an operator to complete an evaluation for each affected parameter on each affected aircraft will be $332.48.

No manufacturer reported to the docket whether any of its aircraft DFDR systems were recording filtered data for any of these eight parameters. As a consequence, the FAA does not know whether there is any such filtered data recording, or the number of affected parameters or the number of affected aircraft DFDR systems.

Therefore, the FAA can only estimate that if there are DFDR systems recording filtered data, it will cost an operator $332.48 to evaluate each affected parameter on each affected aircraft.

Thus, the FAA calculated that, as shown in Table 3, the total cost to comply with this rule is $310,100, which has a present value of $261,801 using a 7 percent discount rate, and a present value of $287,950 using a discount rate of 3 percent.

TABLE 3—TOTAL COSTS AND PRESENT VALUE COSTS TO REPORT COMPLIANCE WITH THE FINAL RULE

[In 2008 dollars]

Type of entity	Total cost	Present value (at 7 percent)	Present value (at 3 percent)
Manufacturer	$151,694	$132,495	$142,986
Operator	158,406	129,306	144,964
Total	310,100	261,801	287,950

As previously discussed, this total cost does not include any potential operator costs to determine that any filtered data meets the requirements of the appropriate appendix because the FAA does not know whether or to what extent the DFDR systems are recording filtered data.

If a DFDR system is recording data for parameters 12 through 17, 42, or 88 that do not meet the requirements of Appendix M because of filtering, the certificate holder has the choice of two methods of compliance. One method would be to remove the filtering. The other method would be for the certificate holder to demonstrate that the original sensor signal data (values) can be acceptably reconstructed using a valid, repeatable procedure. The cost of either action is a cost to comply with the existing standard and, therefore, is not a cost of this rule.

In fact, this rule, by allowing an alternative to removing the filtering, may reduce the costs to bring out-of-compliance aircraft into compliance with the appropriate appendix. We asked for cost information for these actions in the SNPRM, but received no data.

Benefit Cost Analysis

The FAA believes that the rule will provide accident investigators with the more accurate and less ambiguous data necessary to determine the causes of aircraft accidents in a more timely and less expensive way. It also provides operators with a less costly means than the 2006 NPRM to comply with the applicable requirements. As a result, the FAA has determined that the benefits from this rule are greater than the costs.

Regulatory Flexibility Analysis

The Regulatory Flexibility Act of 1980 (Pub. L. 96–354) (RFA) establishes "as a principle of regulatory issuance that

[2] *FAA Aerospace Forecast Fiscal Years 2009–2025,* Tables 20, 21, and 26, pp. 79, 80, and 85.

agencies shall endeavor, consistent with the objectives of the rule and of applicable statutes, to fit regulatory and informational requirements to the scale of the businesses, organizations, and governmental jurisdictions subject to regulation. To achieve this principle, agencies are required to solicit and consider flexible regulatory proposals and to explain the rationale for their actions to assure that such proposals are given serious consideration." The RFA covers a wide-range of small entities, including small businesses, not-for-profit organizations, and small governmental jurisdictions.

Agencies must perform a review to determine whether a rule will have a significant economic impact on a substantial number of small entities. If the agency determines that it will, the agency must prepare a regulatory flexibility analysis as described in the RFA.

However, if an agency determines that a rule is not expected to have a significant economic impact on a substantial number of small entities, section 605(b) of the RFA provides that the head of the agency may so certify and a regulatory flexibility analysis is not required. The certification must include a statement providing the factual basis for this determination, and the reasoning should be clear.

In the SNPRM, the FAA requested information specific to small entities, but received none. In the regulatory evaluation, the FAA calculated that the cost to create a record of the compliance status of each aircraft would be $20.78, which is a minimal cost to a small entity. Subsequent costs to bring a non-compliant aircraft into compliance may be attributable to the 1997 regulation. This final rule may reduce some of those costs by allowing the certificate holder to select a compliance alternative that was not previously available.

Therefore, I certify that this rule will not have a significant economic impact on a substantial number of small entities.

International Trade Analysis

The Trade Agreements Act of 1979 (Pub. L. 96–39), as amended by the Uruguay Round Agreements Act (Pub. L. 103–465), prohibits Federal agencies from establishing any standards or engaging in related activities that create unnecessary obstacles to the foreign commerce of the United States. Pursuant to these Acts, the establishment of standards is not considered unnecessary obstacles to the foreign commerce of the United States, so long as the standards have a legitimate domestic objective, such the protection of safety, and do not operate in a manner that excludes imports that meet this objective. The statute also requires consideration of international standards and, where appropriate, that they be the basis for U.S. standards. The FAA notes the purpose is to ensure the safety of the American public, and has assessed the effects of this rule to ensure it does not exclude imports that meet this objective. As a result, this final rule is not considered as creating an unnecessary obstacle to foreign commerce.

Unfunded Mandates Act

Title II of the Unfunded Mandates Reform Act of 1995 (Pub. L. 104–4) requires each Federal agency to prepare a written statement assessing the effects of any Federal mandate in a proposed or final agency rule that may result in an expenditure of $100 million or more (adjusted annually for inflation with the base year 1995) in any one year by State, local, and Tribal governments, in the aggregate, or by the private sector; such a mandate is deemed to be a "significant regulatory action." The FAA currently uses an inflation-adjusted value of $136.1 million in lieu of $100 million.

This final rule does not contain such a mandate; therefore, the requirements of Title II of the Act do not apply.

Executive Order 13132, Federalism

The FAA has analyzed this final rule under the principles and criteria of Executive Order 13132, Federalism. We determined that this action would not have a substantial direct effect on the States, or the relationship between the Federal Government and the States, or on the distribution of power and responsibilities among the various levels of government, and, therefore, does not have federalism implications.

Environmental Analysis

FAA Order 1050.1E identifies FAA actions that are categorically excluded from preparation of an environmental assessment or environmental impact statement under the National Environmental Policy Act in the absence of extraordinary circumstances. The FAA has determined this rulemaking qualifies for the categorical exclusion identified in Chapter 3, paragraph 312f and involves no extraordinary circumstances.

Regulations That Significantly Affect Energy Supply, Distribution, or Use

The FAA has analyzed this final rule under Executive Order 13211, Actions Concerning Regulations that Significantly Affect Energy Supply, Distribution, or Use (May 18, 2001). We have determined that it is not a "significant energy action" under the executive order because it is not a "significant regulatory action" under Executive Order 12866, and it is not likely to have a significant adverse effect on the supply, distribution, or use of energy.

Regulations Affecting Intrastate Aviation in Alaska

Section 1205 of the FAA Reauthorization Act of 1996 (110 Stat. 3213) requires the FAA, when modifying its regulations in a manner affecting intrastate aviation in Alaska, to consider the extent to which Alaska is not served by transportation modes other than aviation, and to establish appropriate regulatory distinctions. In the NPRM, we requested comments on whether the proposed rule should apply differently to intrastate operations in Alaska. We did not receive any comments, and we have determined, based on the administrative record of this rulemaking, that there is no need to make any regulatory distinctions applicable to intrastate aviation in Alaska.

Availability of Rulemaking Documents

You can get an electronic copy of rulemaking documents using the Internet by—

1. Searching the Federal eRulemaking Portal (*http://www.regulations.gov*);
2. Visiting the FAA's Regulations and Policies Web page at *http://www.faa.gov/regulations_policies/;* or
3. Accessing the Government Printing Office's Web page at *http://www.gpoaccess.gov/fr/index.html*.

You can also get a copy by sending a request to the Federal Aviation Administration, Office of Rulemaking, ARM–1, 800 Independence Avenue SW., Washington, DC 20591, or by calling (202) 267–9680. Make sure to identify the docket number or amendment number of this rulemaking.

You may search the electronic form of all comments received into any of our dockets by the name of the individual submitting the comment (or signing the comment, if submitted on behalf of an association, business, labor union, *etc.*). You may review DOT's complete Privacy Act statement in the **Federal Register** published on April 11, 2000 (Volume 65, Number 70; Pages 19477–78) or you may visit *http://DocketsInfo.dot.gov*.

Small Business Regulatory Enforcement Fairness Act

The Small Business Regulatory Enforcement Fairness Act (SBREFA) of 1996 requires FAA to comply with

small entity requests for information or advice about compliance with statutes and regulations within its jurisdiction. If you are a small entity and you have a question regarding this document, you may contact your local FAA official, or the person listed under the **FOR FURTHER INFORMATION CONTACT** heading at the beginning of the preamble. You can find out more about SBREFA on the Internet at *http://www.faa.gov/regulations_policies/rulemaking/sbre_act/*.

List of Subjects in 14 CFR Parts 121, 125, and 135

Air carriers, Aircraft, Aviation safety, Safety, Transportation.

The Amendment

■ In consideration of the foregoing, the Federal Aviation Administration amends Chapter I of Title 14, Code of Federal Regulations, as follows:

PART 121—OPERATING REQUIREMENTS: DOMESTIC, FLAG, AND SUPPLEMENTAL OPERATIONS

■ 1. The authority citation for part 121 continues to read as follows:

Authority: 49 U.S.C. 106(g), 1153, 40101, 40102, 40103, 40113, 41721, 44105, 44106, 44111, 44701–44717, 44722, 44901, 44903, 44904, 44906, 44912, 44914, 44936, 44938, 46103, 46105.

■ 2. Revise § 121.344a(e) to read as follows:

§ 121.344a Digital flight data recorders for 10–19 seat airplanes.

* * * * *

(e) All airplanes subject to this section are also subject to the requirements and exceptions stated in § 121.344(g) through (k) and § 121.346.

* * * * *

■ 3. Add a new § 121.346 to read as follows:

§ 121.346 Flight data recorders: filtered data.

(a) A flight data signal is filtered when an original sensor signal has been changed in any way, other than changes necessary to:

(1) Accomplish analog to digital conversion of the signal;

(2) Format a digital signal to be DFDR compatible; or

(3) Eliminate a high frequency component of a signal that is outside the operational bandwidth of the sensor.

(b) An original sensor signal for any flight recorder parameter required to be recorded under § 121.344 may be filtered only if the recorded signal value continues to meet the requirements of Appendix B or M of this part, as applicable.

(c) For a parameter described in § 121.344(a) (12) through (17), (42), or (88), or the corresponding parameter in Appendix B of this part, if the recorded signal value is filtered and does not meet the requirements of Appendix B or M of this part, as applicable, the certificate holder must:

(1) Remove the filtering and ensure that the recorded signal value meets the requirements of Appendix B or M of this part, as applicable; or

(2) Demonstrate by test and analysis that the original sensor signal value can be reconstructed from the recorded data. This demonstration requires that:

(i) The FAA determine that the procedure and the test results submitted by the certificate holder as its compliance with paragraph (c)(2) of this section are repeatable; and

(ii) The certificate holder maintains documentation of the procedure required to reconstruct the original sensor signal value. This documentation is also subject to the requirements of § 121.344(i).

(d) *Compliance.* Compliance is required as follows:

(1) No later than October 20, 2011, each operator must determine, for each airplane on its operations specifications, whether the airplane's DFDR system is filtering any of the parameters listed in paragraph (c) of this section. The operator must create a record of this determination for each airplane it operates, and maintain it as part of the correlation documentation required by § 121.344(j)(3) of this part.

(2) For airplanes that are not filtering any listed parameter, no further action is required unless the airplane's DFDR system is modified in a manner that would cause it to meet the definition of filtering on any listed parameter.

(3) For airplanes found to be filtering a parameter listed in paragraph (c) of this section, the operator must either:

(i) No later than April 21, 2014, remove the filtering; or

(ii) No later than April 22, 2013, submit the necessary procedure and test results required by paragraph (c)(2) of this section.

(4) After April 21, 2014, no aircraft flight data recording system may filter any parameter listed in paragraph (c) of this section that does not meet the requirements of Appendix B or M of this part, unless the certificate holder possesses test and analysis procedures and the test results that have been approved by the FAA. All records of tests, analysis and procedures used to comply with this section must be maintained as part of the correlation documentation required by § 121.344(j)(3) of this part.

■ 4. Amend Appendix M to part 121 by revising the introductory text to read as follows:

Appendix M to Part 121—Airplane Flight Recorder Specifications

The recorded values must meet the designated range, resolution and accuracy requirements during static and dynamic conditions. Dynamic condition means the parameter is experiencing change at the maximum rate attainable, including the maximum rate of reversal. All data recorded must be correlated in time to within one second.

* * * * *

PART 125—CERTIFICATION AND OPERATIONS: AIRPLANES HAVING A SEATING CAPACITY OF 20 OR MORE PASSENGERS OR A MAXIMUM PAYLOAD CAPACITY OF 6,000 POUNDS OR MORE; AND RULES GOVERNING PERSONS ON BOARD SUCH AIRCRAFT

■ 5. The authority citation for part 125 continues to read as follows:

Authority: 49 U.S.C. 106(g), 40113, 44701–44702, 44705, 44710–44711, 44713, 44716–44717, 44722.

■ 6. Add a new § 125.228 in Subpart F to read as follows:

§ 125.228 Flight data recorders: filtered data.

(a) A flight data signal is filtered when an original sensor signal has been changed in any way, other than changes necessary to:

(1) Accomplish analog to digital conversion of the signal;

(2) Format a digital signal to be DFDR compatible; or

(3) Eliminate a high frequency component of a signal that is outside the operational bandwidth of the sensor.

(b) An original sensor signal for any flight recorder parameter required to be recorded under § 125.226 may be filtered only if the recorded signal value continues to meet the requirements of Appendix D or E of this part, as applicable.

(c) For a parameter described in § 125.226(a) (12) through (17), (42), or (88), or the corresponding parameter in Appendix D of this part, if the recorded signal value is filtered and does not meet the requirements of Appendix D or E of this part, as applicable, the certificate holder must:

(1) Remove the filtering and ensure that the recorded signal value meets the requirements of Appendix D or E of this part, as applicable; or

(2) Demonstrate by test and analysis that the original sensor signal value can be reconstructed from the recorded data. This demonstration requires that:

(i) The FAA determine that the procedure and the test results submitted by the certificate holder as its compliance with paragraph (c)(2) of this section are repeatable; and

(ii) The certificate holder maintains documentation of the procedure required to reconstruct the original sensor signal value. This documentation is also subject to the requirements of § 125.226(i).

(d) *Compliance.* Compliance is required as follows:

(1) No later than October 20, 2011, each operator must determine, for each airplane it operates, whether the airplane's DFDR system is filtering any of the parameters listed in paragraph (c) of this section. The operator must create a record of this determination for each airplane it operates, and maintain it as part of the correlation documentation required by § 125.226(j)(3) of this part.

(2) For airplanes that are not filtering any listed parameter, no further action is required unless the airplane's DFDR system is modified in a manner that would cause it to meet the definition of filtering on any listed parameter.

(3) For airplanes found to be filtering a parameter listed in paragraph (c) of this section, the operator must either:

(i) No later than April 21, 2014, remove the filtering; or

(ii) No later than April 22, 2013, submit the necessary procedure and test results required by paragraph (c)(2) of this section.

(4) After April 21, 2014, no aircraft flight data recording system may filter any parameter listed in paragraph (c) of this section that does not meet the requirements of Appendix D or E of this part, unless the certificate holder possesses test and analysis procedures and the test results that have been approved by the FAA. All records of tests, analysis and procedures used to comply with this section must be maintained as part of the correlation documentation required by § 125.226(j)(3) of this part.

■ 7. Amend Appendix E to part 125 by revising the introductory to read as follows:

Appendix E to Part 125—Airplane Flight Recorder Specifications

The recorded values must meet the designated range, resolution and accuracy requirements during static and dynamic conditions. Dynamic condition means the parameter is experiencing change at the maximum rate attainable, including the maximum rate of reversal. All data recorded must be correlated in time to within one second.

* * * * *

PART 135—OPERATING REQUIREMENTS: COMMUTER AND ON DEMAND OPERATIONS AND RULES GOVERNING PERSONS ON BOARD SUCH AIRCRAFT

■ 8. The authority citation for part 135 continues to read as follows:

Authority: 49 U.S.C. 106(g), 41706, 44113, 44701–44702, 44705, 44709, 44711–44713, 44715–44717, 44722.

■ 9. Add a new § 135.156 to read as follows:

§ 135.156 Flight data recorders: filtered data.

(a) A flight data signal is filtered when an original sensor signal has been changed in any way, other than changes necessary to:

(1) Accomplish analog to digital conversion of the signal;

(2) Format a digital signal to be DFDR compatible; or

(3) Eliminate a high frequency component of a signal that is outside the operational bandwidth of the sensor.

(b) An original sensor signal for any flight recorder parameter required to be recorded under § 135.152 may be filtered only if the recorded signal value continues to meet the requirements of Appendix D or F of this part, as applicable.

(c) For a parameter described in § 135.152(h)(12) through (17), (42), or (88), or the corresponding parameter in Appendix D of this part, if the recorded signal value is filtered and does not meet the requirements of Appendix D or F of this part, as applicable, the certificate holder must:

(1) Remove the filtering and ensure that the recorded signal value meets the requirements of Appendix D or F of this part, as applicable; or

(2) Demonstrate by test and analysis that the original sensor signal value can be reconstructed from the recorded data. This demonstration requires that:

(i) The FAA determine that the procedure and test results submitted by the certificate holder as its compliance with paragraph (c)(2) of this section are repeatable; and

(ii) The certificate holder maintains documentation of the procedure required to reconstruct the original sensor signal value. This documentation is also subject to the requirements of § 135.152(e).

(d) *Compliance.* Compliance is required as follows:

(1) No later than October 20, 2011, each operator must determine, for each aircraft on its operations specifications, whether the aircraft's DFDR system is filtering any of the parameters listed in paragraph (c) of this section. The operator must create a record of this determination for each aircraft it operates, and maintain it as part of the correlation documentation required by § 135.152 (f)(1)(iii) or (f)(2)(iii) of this part as applicable.

(2) For aircraft that are not filtering any listed parameter, no further action is required unless the aircraft's DFDR system is modified in a manner that would cause it to meet the definition of filtering on any listed parameter.

(3) For aircraft found to be filtering a parameter listed in paragraph (c) of this section the operator must either:

(i) No later than April 21, 2014, remove the filtering; or

(ii) No later than April 22, 2013, submit the necessary procedure and test results required by paragraph (c)(2) of this section.

(4) After April 21, 2014, no aircraft flight data recording system may filter any parameter listed in paragraph (c) of this section that does not meet the requirements of Appendix D or F of this part, unless the certificate holder possesses test and analysis procedures and the test results that have been approved by the FAA. All records of tests, analysis and procedures used to comply with this section must be maintained as part of the correlation documentation required by § 135.152 (f)(1)(iii) or (f)(2)(iii) of this part as applicable.

■ 10. Amend Appendix F to part 135 by revising the introductory text to read as follows:

Appendix F to Part 135—Airplane Flight Recorder Specifications

The recorded values must meet the designated range, resolution and accuracy requirements during static and dynamic conditions. Dynamic condition means the parameter is experiencing change at the maximum rate attainable, including the maximum rate of reversal. All data recorded must be correlated in time to within one second.

* * * * *

Issued in Washington, DC, on February 5, 2010.

J. Randolph Babbitt,

Administrator.

[FR Doc. 2010–3321 Filed 2–18–10; 8:45 am]

BILLING CODE 4910–13–P

DEPARTMENT OF COMMERCE

Bureau of Industry and Security

15 CFR Part 744

[Docket No. 100115025–0032–01]

RIN 0694–AE84

Addition of Certain Persons to the Entity List: Addition of Persons Acting Contrary to the National Security or Foreign Policy Interests of the United States

AGENCY: Bureau of Industry and Security, Commerce.

ACTION: Final rule.

SUMMARY: This rule amends the Export Administration Regulations (EAR) by adding ten additional persons located in Hong Kong and Taiwan to the Entity List (Supplement No. 4 to Part 744) on the basis of Section 744.11 of the EAR. These persons that are added to the Entity List have been determined by the U.S. Government to be acting contrary to the national security or foreign policy interests of the United States.

The Entity List provides notice to the public that certain exports, reexports, and transfers (in-country) to parties identified on the Entity List require a license from the Bureau of Industry and Security (BIS) and that availability of license exceptions in such transactions is limited.

DATES: *Effective Date:* This rule is effective February 19, 2010. Although there is no formal comment period, public comments on this regulation are welcome on a continuing basis.

ADDRESSES: You may submit comments, identified by RIN 0694–AE84, by any of the following methods:

E-mail: publiccomments@bis.doc.gov. Include "RIN 0694–AE84" in the subject line of the message.

Fax: (202) 482–3355. Please alert the Regulatory Policy Division, by calling (202) 482–2440, if you are faxing comments.

Mail or Hand Delivery/Courier: Timothy Mooney, U.S. Department of Commerce, Bureau of Industry and Security, Regulatory Policy Division, 14th St. & Pennsylvania Avenue, NW., Room 2705, Washington, DC 20230, *Attn:* RIN 0694–AE84. Send comments regarding the collection of information associated with this rule, including suggestions for reducing the burden, to Jasmeet K. Seehra, Office of Management and Budget (OMB), by e-mail to *Jasmeet_K._Seehra@omb.eop.gov,* or by fax to (202) 395–7285; and to the Regulatory Policy Division, Bureau of Industry and Security, Department of Commerce, 14th St. & Pennsylvania Avenue, NW., Room 2705, Washington, DC 20230. Comments on this collection of information should be submitted separately from comments on the final rule (i.e. RIN 0694–AE84)—all comments on the latter should be submitted by one of the three methods outlined above.

FOR FURTHER INFORMATION CONTACT: Elizabeth Scott Sangine, Acting Chairman, End-User Review Committee, Office of the Assistant Secretary, Export Administration, Bureau of Industry and Security, Department of Commerce, Phone: (202) 482–3343, Fax: (202) 482–3911, e-mail: *bscott@bis.doc.gov.*

SUPPLEMENTARY INFORMATION:

Background

The Entity List provides notice to the public that certain exports, reexports, and transfers (in-country) to parties identified on the Entity List require a license from the Bureau of Industry and Security (BIS) and that availability of license exceptions in such transactions is limited. Persons are placed on the Entity List on the basis of criteria set forth in certain sections of part 744 (Control Policy: End-User and End-Use Based) of the EAR.

The End-User Review Committee (ERC), composed of representatives of the Departments of Commerce (Chair), State, Defense, Energy and, where appropriate, the Treasury, makes all decisions regarding additions to, removals from or changes to the Entity List. The ERC makes all decisions to add an entry to the Entity List by majority vote and all decisions to remove or modify an entry by unanimous vote.

ERC Entity List Decisions

The ERC made a determination to add ten persons to the Entity List on the basis of § 744.11 (License Requirements That Apply to Entities Acting Contrary to the National Security or Foreign Policy Interests of the United States) of the EAR. The ten entries added to the Entity List consist of six persons in Hong Kong and four persons in Taiwan.

The ERC reviewed § 744.11(b) (Criteria for revising the Entity List) in making the determination to add these persons to the Entity List. Under that paragraph, entities for which there is reasonable cause to believe, based on specific and articulable facts, that have been involved, are involved, or pose a significant risk of being or becoming involved in activities that are contrary to the national security or foreign policy interests of the United States and those acting on behalf of such entities may be added to the Entity List pursuant to § 744.11. Paragraphs (b)(1)–(b)(5) include an illustrative list of activities that could be contrary to the national security or foreign policy interests of the United States. The persons being added to the Entity List under this rule have been determined by the ERC to be involved in activities that could be contrary to the national security or foreign policy interests of the United States.

Additions to the Entity List

This rule implements the decision of the ERC to add ten persons to the Entity List on the basis of § 744.11 of the EAR. For all of the ten persons added to the Entity List, the ERC specifies a license requirement for all items subject to the EAR and establishes a license application review policy of a presumption of denial. The license requirement applies to any transaction in which items are to be exported, reexported or transferred (in-country) to such persons or in which such persons act as purchaser, intermediate consignee, ultimate consignee, or end-user. In addition, no license exceptions are available for shipments to those persons being added to the Entity List.

Specifically, this rule adds the following ten persons to the Entity List:

Hong Kong

(1) *ACTeam Logistics Ltd.,* Unit B1–B3, 21/F, Block B, Kong Nam Industrial Building, 603–609 Castle Peak Road, Tsuen Wan, N.T., Hong Kong;

(2) *Dick Kuo,* Room 9–11, 5/F, Block B, Hoplite Industrial Centre, 3–5 Wang Tai Road, Kowloon, Hong Kong;

(3) *Dick Leung,* GF Seapower Industrial Building 177, Hoi Bun Road, Kowloon, Hong Kong;

(4) *Joe Shih,* Room 9–11, 5/F, Block B, Hoplite Industrial Centre, 3–5 Wang Tai Road, Kowloon, Hong Kong;

(5) *Signet Express Co., Ltd.,* Room 9–11, 5/F, Block B, Hoplite Industrial Centre, 3–5 Wang Tai Road, Kowloon, Hong Kong; *and*

(6) *Tex-Co Logistics Ltd.,* GF Seapower Industrial Building 177, Hoi Bun Road, Kowloon, Hong Kong, *and* Room 2202, 22F, Causeway Bay Plaza 1, 489 Hennessey Road, Causeway Bay, Hong Kong, *and* Room B03, 6/F, Cheong Wah Factory Building, 39–41 Sheung Heung Road, Tokwawan, Kowloon, Hong Kong.

Taiwan

(1) *Christine Sun,* 7th Floor, Number 17, Zhonghua Rd., Sec 2, Xinzhuang City, Taipei, Taiwan;

(2) *In-Tech Company, a.k.a., In-Tech Telecom,* Number 15, Lane 347,

Jhongjheng Road, Sinjihuang City, Taipei, Taiwan, *and* 7th Floor, Number 17, Zhonghua Rd., Sec 2, Xinzhuang City, Taipei, Taiwan;

(3) *Landstar Tech Company Ltd.,* 13/F, Number 181, Sec 1, Datong Rd., Sijhih City, Taipei, Taiwan; *and*

(4) *Yi-Lan Chen, a.k.a., Kevin Chen,* 13/F, Number 181, Sec 1, Datong Rd., Sijhih City, Taipei, Taiwan, *and* 7th Floor, Number 17, Zhonghua Rd., Sec 2, Xinzhuang City, Taipei, Taiwan.

A BIS license is required for the export, reexport or transfer (in-country) of any item subject to the EAR to any of the persons listed above, including any transaction in which any of the listed persons will act as purchaser, intermediate consignee, ultimate consignee, or end-user of the items. This listing of these persons also prohibits the use of license exceptions (*see* part 740 of the EAR) for exports, reexports and transfers (in-country) of items subject to the EAR involving such persons.

Savings Clause

Shipments of items removed from eligibility for a License Exception or export or reexport without a license (NLR) as a result of this regulatory action that were on dock for loading, on lighter, laden aboard an exporting or reexporting carrier, or en route aboard a carrier to a port of export or reexport, on February 19, 2010, pursuant to actual orders for export or reexport to a foreign destination, may proceed to that destination under the previous eligibility for a License Exception or export or reexport without a license (NLR) so long as they are exported or reexported before March 22, 2010. Any such items not actually exported or reexported before midnight, on March 22, 2010, require a license in accordance with this rule.

Although the Export Administration Act expired on August 20, 2001, the President, through Executive Order 13222 of August 17, 2001, 3 CFR, 2001 Comp., p. 783 (2002), as extended by the Notice of August 13, 2009, 74 FR 41325 (August 14, 2009), has continued the Export Administration Regulations in effect under the International Emergency Economic Powers Act.

Rulemaking Requirements

1. This rule has been determined to be not significant for purposes of Executive Order 12866.

2. Notwithstanding any other provision of law, no person is required to respond to nor be subject to a penalty for failure to comply with a collection of information, subject to the requirements of the Paperwork Reduction Act of 1995 (44 U.S.C. 3501 *et seq.*) (PRA), unless that collection of information displays a currently valid Office of Management and Budget (OMB) Control Number. This regulation involves collections previously approved by the OMB under control numbers 0694–0088, "Multi-Purpose Application," which carries a burden hour estimate of 58 minutes to prepare and submit form BIS–748. Miscellaneous and recordkeeping activities account for 12 minutes per submission. Total burden hours associated with the Paperwork Reduction Act and Office and Management and Budget control number 0694–0088 are expected to increase slightly as a result of this rule.

3. This rule does not contain policies with Federalism implications as that term is defined in Executive Order 13132.

4. The provisions of the Administrative Procedure Act (5 U.S.C. 553) requiring notice of proposed rulemaking, the opportunity for public participation, and a delay in effective date, are inapplicable because this regulation involves a military or foreign affairs function of the United States. (*See* 5 U.S.C. 553(a)(1)). Further, no other law requires that a notice of proposed rulemaking and an opportunity for public comment be given for this rule. Because a notice of proposed rulemaking and an opportunity for public comment are not required to be given for this rule by 5 U.S.C. 553, or by any other law, the analytical requirements of the Regulatory Flexibility Act, 5 U.S.C. 601 *et seq.,* are not applicable.

List of Subjects in 15 CFR Part 744

Exports, Reporting and recordkeeping requirements, Terrorism.

■ Accordingly, part 744 of the Export Administration Regulations (15 CFR parts 730–774) is amended as follows:

PART 744—[AMENDED]

■ 1. The authority citation for 15 CFR part 744 continues to read as follows:

Authority: 50 U.S.C. app. 2401 *et seq.;* 50 U.S.C. 1701 *et seq.;* 22 U.S.C. 3201 *et seq.;* 42 U.S.C. 2139a; 22 U.S.C. 7201 *et seq.;* 22 U.S.C. 7210; E.O. 12058, 43 FR 20947, 3 CFR, 1978 Comp., p. 179; E.O. 12851, 58 FR 33181, 3 CFR, 1993 Comp., p. 608; E.O. 12938, 59 FR 59099, 3 CFR, 1994 Comp., p. 950; E.O. 12947, 60 FR 5079, 3 CFR, 1995 Comp., p. 356; E.O. 13026, 61 FR 58767, 3 CFR, 1996 Comp., p. 228; E.O. 13099, 63 FR 45167, 3 CFR, 1998 Comp., p. 208; E.O. 13222, 66 FR 44025, 3 CFR, 2001 Comp., p. 783; E.O. 13224, 66 FR 49079, 3 CFR, 2001 Comp., p. 786; Notice of August 13, 2009, 74 FR 41325 (August 14, 2009); Notice of November 6, 2009, 74 FR 58187 (November 10, 2009).

■ 2. Supplement No. 4 to part 744 is amended:

■ a. By adding under Hong Kong, in alphabetical order, six Hong Kong entities; and

■ b. By adding, in alphabetical order, the destination of Taiwan under the Country column and four Taiwanese entities;

The additions read as follows:

Supplement No. 4 to Part 744—Entity List

Country	Entity	License requirement	License review policy	Federal Register citation
*	*	*	*	*
HONG KONG				
*	*	*	*	*
	ACTeam Logistics Ltd., Unit B1–B3, 21/F, Block B, Kong Nam Industrial Building, 603–609 Castle Peak Road, Tsuen Wan, N.T., Hong Kong.	For all items subject to the EAR. (See § 744.11 of the EAR).	Presumption of denial	75 FR [INSERT FR PAGE NUMBER], 2/19/10.

Country	Entity	License requirement	License review policy	Federal Register citation
*	*	* *	*	* *
	Dick Kuo, Room 9–11, 5/F, Block B, Hoplite Industrial Centre, 3–5 Wang Tai Road, Kowloon, Hong Kong.	For all items subject to the EAR. (See § 744.11 of the EAR).	Presumption of denial	75 [INSERT FR PAGE NUMBER], 2/19/10.
	Dick Leung, GF Seapower Industrial Building 177, Hoi Bun Road, Kowloon, Hong Kong.	For all items subject to the EAR. (See § 744.11 of the EAR).	Presumption of denial	75 FR [INSERT FR PAGE NUMBER], 2/19/10.
*	*	* *	*	* *
	Joe Shih, Room 9–11, 5/F, Block B, Hoplite Industrial Centre, 3–5 Wang Tai Road, Kowloon, Hong Kong.	For all items subject to the EAR. (See § 744.11 of the EAR).	Presumption of denial	75 FR [INSERT FR PAGE NUMBER], 2/19/10.
*	*	* *	*	* *
	Signet Express Co., Ltd., Room 9–11, 5/F, Block B, Hoplite Industrial Centre, 3–5 Wang Tai Road, Kowloon, Hong Kong.	For all items subject to the EAR. (See § 744.11 of the EAR).	Presumption of denial	75 FR [INSERT FR PAGE NUMBER], 2/19/10.
*	*	* *	*	* *
	Tex-Co Logistics Ltd., GF Seapower Industrial Building 177, Hoi Bun Road, Kowloon, Hong Kong, and Room 2202, 22F, Causeway Bay Plaza 1, 489 Hennessey Road, Causeway Bay, Hong Kong, and Room B03, 6/F, Cheong Wah Factory Building, 39–41 Sheung Heung Road, Tokwawan, Kowloon, Hong Kong.	For all items subject to the EAR. (See § 744.11 of the EAR).	Presumption of denial	75 FR [INSERT FR PAGE NUMBER], 2/19/10.
*	*	* *	*	* *
TAIWAN	Christine Sun, 7th Floor, Number 17, Zhonghua Rd., Sec 2, Xinzhuang City, Taipei, Taiwan.	For all items subject to the EAR. (See § 744.11 of the EAR).	Presumption of denial	75 FR [INSERT FR PAGE NUMBER], 2/19/10.
	In-Tech Company, a.k.a., In-Tech Telecom, Number 15, Lane 347, Jhongjheng Road, Sinjihuang City, Taipei, Taiwan, and 7th Floor, Number 17, Zhonghua Rd., Sec 2, Xinzhuang City, Taipei, Taiwan.	For all items subject to the EAR. (See § 744.11 of the EAR).	Presumption of denial	75 FR [INSERT FR PAGE NUMBER], 2/19/10.
	Landstar Tech Company Ltd., 13/F, Number 181, Sec 1, Datong Rd., Sijhih City, Taipei, Taiwan.	For all items subject to the EAR. (See § 744.11 of the EAR).	Presumption of denial	75 FR [INSERT FR PAGE NUMBER], 2/19/10.
	Yi-Lan Chen, a.k.a., Kevin Chen, 13/F, Number 181, Sec 1, Datong Rd., Sijhih City, Taipei, Taiwan, and 7th Floor, Number 17, Zhonghua Rd., Sec 2, Xinzhuang City, Taipei, Taiwan.	For all items subject to the EAR. (See § 744.11 of the EAR).	Presumption of denial	75 FR [INSERT FR PAGE NUMBER], 2/19/10.
*	*	* *	*	* *

Dated: February 3, 2010.

Matthew S. Borman,

Deputy Assistant Secretary for Export Administration.

[FR Doc. 2010–3278 Filed 2–18–10; 8:45 am]

BILLING CODE 3510–33–P

DEPARTMENT OF COMMERCE

National Oceanic and Atmospheric Administration

15 CFR Part 902

50 CFR Part 300

[Docket No. 070717350–9936–02]

RIN 0648–AV63

International Fisheries; Western and Central Pacific Fisheries for Highly Migratory Species; Initial Implementation of the Western and Central Pacific Fisheries Convention; Correction

AGENCY: National Marine Fisheries Service (NMFS), National Oceanic and Atmospheric Administration (NOAA), Commerce.

ACTION: Final rule; correction.

SUMMARY: This action corrects the effective date of final regulations published in the Federal Register on January 21, 2010, from February 22, 2010, to April 21, 2010. The rule establishes regulations needed to carry out the obligations of the United States under the Convention on the Conservation and Management of Highly Migratory Fish Stocks in the Western and Central Pacific Ocean (Convention). The regulations include requirements related to permitting, vessel monitoring systems, vessel observers, vessel markings, reporting and recordkeeping, at-sea transshipment, and boarding and inspection on the high seas, among others. The rule will have the effect of requiring that all relevant U.S. fishing vessels are operated in conformance with the provisions of the Convention.

DATES: The effective date of the final regulations published in the Federal Register on January 21, 2010, at 75 FR 3335, is April 21, 2010.

FOR FURTHER INFORMATION CONTACT: Tom Graham, NMFS Pacific Islands Region, 808–944–2219.

SUPPLEMENTARY INFORMATION:

Need for Correction

In the document published January 21, 2010 (75 FR 3335), under the **DATES** section, the effective date of the final rule was erroneously stated as being February 22, 2010. This document corrects the effective date to read as follows:

DATES: This final rule is effective April 21, 2010.

Authority: 16 U.S.C. 5501 et seq; 16 U.S.C. 6901 et seq.

Dated: February 12, 2010.

Samuel D. Rauch III,

Deputy Assistant Administrator for Regulatory Programs, National Marine Fisheries Service.

[FR Doc. 2010–3277 Filed 2–18–10; 8:45 am]

BILLING CODE 3510–22–S

DEPARTMENT OF COMMERCE

National Oceanic and Atmospheric Administration

15 CFR Part 922

[Docket No. 090122043–0025–02]

RIN 0648–AX37

Gray's Reef National Marine Sanctuary Regulations on the Use of Spearfishing Gear

AGENCY: Office of National Marine Sanctuaries (ONMS), National Ocean Service (NOS), National Oceanic and Atmospheric Administration (NOAA), Department of Commerce (DOC).

ACTION: Final rule.

SUMMARY: The National Oceanic and Atmospheric Administration (NOAA) is issuing a final rule to prohibit the use of spearfishing gear in Gray's Reef National Marine Sanctuary (GRNMS or sanctuary). Possession of spearfishing gear is also prohibited except for vessels passing through the sanctuary without interruption, and only when the gear is stowed and not available for immediate use. Spearfishing can selectively target larger fish, and can significantly reduce abundance and alter the relative size structure of target species toward smaller fish. In addition, spearfishing can impact ecosystem health by altering the composition of the overall natural communities of species. The largest fish are important as predators in maintaining a balanced and complete ecosystem; their selective removal may cause ecological imbalance. Therefore, the prohibition provides protection to the fishes and natural live-bottom community for which the sanctuary was designated. The final rule also facilitates enforcement of an existing prohibition against the use of powerheads within the sanctuary. An environmental assessment has been prepared for this proposed action.

DATES: *Effective Date:* These regulations are effective on March 22, 2010.

ADDRESSES: Copies of the environmental assessment and the socio-economic study described in this rule are available upon request to Gray's Reef National Marine Sanctuary, 10 Ocean Science Circle, Savannah, GA 31411, Attn: Dr. George Sedberry, Superintendent. These documents can also be viewed on the Web and downloaded at *http://graysreef.noaa.gov.*

FOR FURTHER INFORMATION CONTACT: Stewardship Coordinator Becky Shortland at (912) 598–2381.

SUPPLEMENTARY INFORMATION:

I. Background

A. Gray's Reef National Marine Sanctuary

GRNMS was designated as the nation's fourth national marine sanctuary in 1981 for the purposes of protecting the quality of its unique and fragile ecological community; promoting scientific understanding of the live bottom ecosystem; and enhancing public awareness and wise use of this significant regional resource. GRNMS protects 16.68 square nautical miles of open ocean and submerged lands of particularly dense and nearshore patches of productive live bottom habitat. The sanctuary is influenced by complex ocean currents and serves as a mixing zone for temperate (colder water) and sub-tropical species. The series of rock ledges and sand expanses has produced a complex habitat of caves, burrows, troughs, and overhangs that provide a solid base upon which a rich carpet of temperate and tropical marine flora and fauna attach and grow.

This flourishing ecosystem attracts mackerel, grouper, black sea bass, angelfish, and a host of other fishes. An estimated 180 species of fish, encompassing a wide variety of sizes, forms, and ecological roles, have been recorded at GRNMS. Loggerhead sea turtles, a threatened species, use GRNMS year-round for foraging and resting, and the highly endangered northern right whale is occasionally seen in Gray's Reef. GRNMS is one of the most popular sportfishing areas along the Georgia coast.

B. Need for Action

This regulation is being promulgated for two reasons. First, the action provides greater protection to sanctuary resources by removing a gear type that can be used to selectively target larger fish, and can thereby negatively alter the size structure of fish populations. While the number of recreational divers spearfishing at GRNMS appears to be

small, spearfishing is a highly efficient harvesting gear that allows larger fish to be selectively targeted relative to other fishing gears. Such fishing can significantly reduce abundance and alter the relative size structure of target species toward smaller fish. Some fish populations that are present in GRNMS are regionally overfished or approaching overfished status and researchers have commented on the lack of large snapper-grouper individuals at GRNMS.

Second, the action facilitates improved enforcement of an existing prohibition against the use of powerheads within the sanctuary. Powerheads, also sometimes referred to as bang sticks or shark sticks, are a specialized type of firearm intended for use underwater that employ an ammunition cartridge that fires upon direct contact with the target. Powerheads are often attached to the end of a spear gun and used for spear fishing, or may be used for self-defense underwater. Under existing GRNMS regulations, it is unlawful to injure, catch or harvest any marine resource within the sanctuary, by using a powerhead (50 CFR 922.02(a)(5)(i)).

Law enforcement officials have expressed the need to prohibit all spearfishing to enable them to more effectively enforce the existing powerhead prohibition. Although NOAA has prohibited the use of powerheads since the 1981 GRNMS designation, powerhead spear tips and spent shells are still found in GRNMS. Spearguns with a powerhead and without a powerhead are similar in appearance, which can make it much more difficult to detect and prove a violation of the powerhead prohibition. Prohibiting spearfishing in the sanctuary would make the restriction against powerheads more enforceable by law enforcement officers.

C. Previous Regulatory Action Regarding Spearfishing Gear

NOAA considered regulating spearfishing during the original management plan of 1981, but only spearfishing with powerheads was prohibited at the time. A complete spearfishing prohibition was again considered during the review and revision of the GRNMS Management Plan beginning in 1999. Along with the fact that visitor use had increased (primarily recreational fishing), evidence of powerhead use (despite the 1981 ban) created a growing concern. NOAA proposed to prohibit all spearfishing activities with the 2003 Draft Environmental Impact Statement/Draft Management Plan (DEIS/DMP) and associated proposed rule (68 FR 62033, October 31, 2003).

However, after consideration of public comments on the DEIS/DMP, NOAA concluded that additional socioeconomic information was needed and thus deferred any regulatory action on spearfishing. The 2006 Final EIS/MP instead included a commitment to gather additional socioeconomic information on spearfishing in GRNMS and review the issue again in two years.

Additional socioeconomic information was collected, analyzed and presented to the Sanctuary Advisory Council in September 2007. That information indicates no charter spearfishing activity and only a very small amount of private spearfishing activity within the GRNMS. Moreover, abundant opportunities to conduct spearfishing in nearby locations outside the sanctuary already exist. Copies of this report are available at the address and Web site listed in the **ADDRESSES** section of this rule.

D. Participation of the South Atlantic Fishery Management Council (SAFMC)

In accordance with Section 304(a)(5) of the NMSA (16 U.S.C. 1434(a)(5)) GRNMS provided the South Atlantic Fishery Management Council with the opportunity to prepare spearfishing regulations for the sanctuary.

In 2003, the SAFMC agreed with NOAA that spearfishing should be prohibited in the sanctuary and requested that NOAA promulgate the regulations. As previously discussed, however, after consideration of public comments on the Draft Environmental Impact Statement/Draft Management Plan (DEIS/DMP) and the proposed rule, NOAA concluded that additional information was needed and thus deferred taking regulatory action on spearfishing for two years. The final rule (71 FR 60055, October 12, 2006) stated that NOAA would assess socioeconomic factors of spearfishing in GRNMS and would conduct a study to determine the level of spearfishing and other fishing activities. NOAA would then determine what action to take, if any, given the additional data.

NOAA presented an update of this issue, including the additional socioeconomic information that had been collected, at the October 2007 meeting of the Joint Habitat/Ecosystem Based Management Advisory Panel of the SAFMC and again at the December 2007 and March 2008 SAFMC meetings. In June 2008, NOAA provided the SAFMC with the opportunity to prepare draft sanctuary fishing regulations concerning spearfishing activities for GRNMS, recommending that the Council prohibit spearfishing. The SAFMC again concurred with the proposed ban on spearfishing, and requested that NOAA prepare the regulations.

II. Summary of the Changes to the Regulations

This rule amends the regulations for GRNMS by prohibiting the use of all spearfishing gear in the Sanctuary. Specifically, this rule eliminates the phrase "spearfishing gear without powerheads" from the list of allowable gear set forth at 15 CFR 922.92(a)(5)(i). This action also prohibits the possession of spearfishing gear in GRNMS, except when stowed on a vessel and not available for immediate use, and only while passing through the Sanctuary without interruption. Section 922.91(6) has also been revised for greater clarity and to correct an unintended result that was contained in the proposed rule (74 FR 9378, March 4, 2009). As proposed, possession of all fishing gear except rod and reel and handline gear would have been allowed in the Sanctuary only if it was stowed on a vessel, not available for immediate use, and only if the vessel was passing through the Sanctuary without interruption. As revised, the language of the amended regulation is consistent with the current regulations that were promulgated in 2006 and reflects NOAA's intent to allow vessels to enter and stop in the Sanctuary with types of fishing gear on board other than rod and reel and handline gear, (except spearfishing gear), provided that the gear is stowed and not available for immediate use. The requirement for uninterrupted passage is being applied only to vessels with spearfishing gear on board to facilitate enforcement of the prohibitions against spearfishing and the use of powerheads, as explained in greater detail in the responses to comments.

These and all regulations issued pursuant to the National Marine Sanctuaries Act are applied in accordance with generally recognized principles of international law, and in accordance with treaties, conventions, and other agreements to which the United States is a party. No regulation shall apply to or be enforced against a person who is not a citizen, national, or resident alien of the United States, unless in accordance with: (1) Generally recognized principles of international law; (2) an agreement between the United States and the foreign state of which the person is a citizen; or (3) an agreement between the United States and the flag state of a foreign vessel, if the person is a crewmember of the vessel (16 U.S.C. 1435).

III. Classification

A. National Environmental Policy Act

NOAA has prepared an environmental assessment to evaluate the impacts of the rulemaking. A finding of no significant impact was issued on December 23, 2009. Copies are available at the address and Web site listed in the **ADDRESSES** section of this rule.

B. Executive Order 12866: Regulatory Impact

This final rule has been determined to be not significant within the meaning of Executive Order 12866.

C. Executive Order 13132: Federalism Assessment

NOAA has concluded this regulatory action does not have federalism implications sufficient to warrant preparation of a federalism assessment under Executive Order 13132.

D. Regulatory Flexibility Act

The Chief Counsel for Regulation of the Department of Commerce certified to the Chief Counsel for Advocacy of the Small Business Administration (SBA) that this final rule would not have a significant economic impact on a substantial number of small entities. The factual basis for the certification was published with the proposed rule. No comments were received regarding this certification.

E. Paperwork Reduction Act

This final rule does not require any additional collection of information, and therefore no paperwork reduction act action is required. Notwithstanding any other provision of the law, no person is required to respond to, nor shall any person be subject to a penalty for failure to comply with, a collection of information subject to the requirements of the PRA, unless that collection of information displays a currently valid OMB Control Number.

IV. Responses to Public Comments

1. *Comment:* The proposed rule should not be adopted.

Response: As a result of a thorough review of data, literature, surveys, and public and expert comment, NOAA has determined the proposed rule should be adopted to better protect sanctuary resources and facilitate the enforcement of the existing prohibition against the use of powerheads. Spearfishing can be used to selectively target larger fish, and can significantly reduce abundance and alter the relative size structure of target species toward smaller fish. In addition, spearfishing can impact ecosystem health by altering the composition of the overall natural communities of species. The largest fish are important as predators in maintaining a balanced and complete ecosystem; their selective removal may cause ecological imbalance. Therefore, prohibition of all spearfishing gear in GRNMS will provide needed protection to the fishes and the overall natural live-bottom community for which the sanctuary was designated. In addition, the combination of the absence of charter spearfishing activity at GRNMS and the abundant substitution opportunities nearby lead to the conclusion that a prohibition on spearfishing at GRNMS would result in no measurable economic impact.

2. *Comment:* The proposed action will set a precedent of compromising fishing rights.

Response: NOAA disagrees that the action establishes a precedent. NOAA considers the need for regulations in each national marine sanctuary individually, based on a rigorous analysis of the circumstances at each location. The promulgation of a regulation in one sanctuary does not automatically result in an export of that regulation to other sanctuaries.

3. *Comment:* The decision to ban spearfishing gear in GRNMS was made on biased, unsubstantiated information; the action is unwarranted, discriminatory and arbitrary.

Response: NOAA disagrees. As noted in the response to comment #1, the action to ban spearfishing was carefully considered after evaluation of the best science available. The proposed rule is based on multiple, scientifically-sound, peer-reviewed studies of the biological impacts of spearfishing activities in numerous locations around the world.

The socioeconomic surveys and analysis methods were based on OMB-approved guidelines. These methods have been used in the past for other socioeconomic studies (*e.g.:* FKNMS, CINMS and Dry Tortugas Ecological Reserve in Florida.) The purpose of the socioeconomic review—which showed there would be little economic impact—was not to enumerate the number of spearfishermen, but to evaluate the overall economic impact of a ban, including alternatives to a ban.

In addition, GRNMS has learned that allowing spearfishing makes it difficult to enforce the prohibition against powerheads, due to the similarity in the gear. The decision to prohibit spearfishing is justified for this separate, additional reason. See response to comment 16, below.

4. *Comment:* Data are unclear or unknown regarding the percentages of take between spearfishing and rod and reel fishing.

Response: NOAA acknowledges that the percentage of take between spearfishing and rod and reel fishing is unknown, not only in GRNMS, but regionally. The current level of spearfishing activity at GRNMS is anticipated to be low and the corresponding level of take could also be low. It is known that rod and reel fishing comprises the majority of recreational fishing at GRNMS with the majority of rod and reel fishermen targeting coastal pelagic species around and during tournaments.

However, impacts from spearfishing and impacts from rod and reel fishing differ. Scientific evidence indicates that larger fish are favored targets of recreational spearfishermen. Spearfishing allows fishermen to more effectively select for larger individuals within target species populations. Spearfishing has been shown to remove greater biomass of reef fishes than rod and reel fishing relative to effort expended. Scientific research has also found that the intrinsic vulnerability of fish populations under pressure is exacerbated by spearfishing. SCUBA-supported spearfishing is likely to have a significantly greater catch per unit effort than non-SCUBA-supported spearfishing. The effectiveness and efficiency of SCUBA-supported spearfishing has resulted in bans on this activity in numerous parts of the world.

5. *Comment:* Fishing regulatory discard figures in the rulemaking are wrong.

Response: NOAA has reconsidered the 3 percent figure that was cited in the draft environmental assessment as regulatory discards by spearfishing. This figure does not apply to this action because the discards in the referenced study included lobster, which are not known to be a target of spearfishing at GRNMS. Nevertheless, the best available data on regulatory discards (fish caught but discarded due to size restrictions) indicates that a small percentage of fish speared may be discarded and that some percentage of fish also escape with spear induced injuries.

6. *Comment:* GRNMS lacks sufficient baseline data to determine the effect of the prohibition on spearfishing over time.

Response: NOAA disagrees that there is a lack of baseline information on fish size and abundance. NOAA has conducted visual fish censuses for almost 20 years, resulting in information on fish size and abundance in the sanctuary. NOAA anticipates that future censuses will provide information that can be used to detect a change in fish size and abundance over time.

7. *Comment:* GRNMS's assumption that spearfishing targets larger, more reproductively-valuable fish is incorrect for the following reasons:

• There is no scientific evidence that spearfishing targets larger fish and that taking larger fish decreases reproductive capacity of breeding stock;

• There is no scientific evidence to show there is more impact on specific kinds and sizes of fish from spearfishing than rod and reel fishing;

• Spearfishermen must harvest larger fish due to catch size limits;

• Spearfishermen do not harvest the larger fish because fish swim away from spearfishermen;

• Spearfishermen can harvest the largest and most prolific species in tropical clear water, but not in waters off Georgia where visibility is poor and target species are migratory in nature;

• The lack of larger individual fish at GRNMS may be due to lack of food supply and not spearfishing.

Response: Scientific evidence indicates that larger fish are favored targets of recreational spearfishermen. Spearfishing also allows fishermen to more effectively select for larger individuals within target species populations.

Spearfishing is an efficient harvesting activity that can significantly alter abundance and size structure of target species toward fewer and smaller fish by selective removal of larger individual fish. The removal of larger individual fish of the target species leaves behind smaller individuals to spawn. Over time this can decrease the size and age at sexual maturity and decrease the average size of the population.

Studies of areas where fishing pressure has been removed have shown that populations of spearfishing target species, often larger predatory fish such as snapper and grouper, have improved in size distribution and, often, in fish abundance. While a ban on spearfishing would result only in the removal of a small amount of fishing pressure at GRNMS, NOAA believes that the removal of selected targeting of larger predatory fish, which is typical of spearfishing, may result in more robust populations.

In addition, selectively removing larger individuals from populations of protogynous (sex-changing) species can make such populations susceptible to sperm limitation. This is especially true for species such as gag grouper, a regionally overfished, protogynous resident of GRNMS, that form small spawning aggregations. Vulnerable pre-spawning aggregations of gag occur at GRNMS.

Reduction in the larger predatory fishes can also have a "top-down" effect on fish assemblages by allowing other fish populations to increase, altering the composition of the overall natural community of species, including invertebrates. The largest fish are important as predators in maintaining a balanced and complete ecosystem; their selective removal may cause ecological imbalance.

Many snapper-grouper species of fish are regionally overfished or undergoing overfishing. All indications are that large individuals of the targeted snapper-grouper species in GRNMS are already limited. Large individual snapper-grouper fish are a source of reproductive abundance for the sanctuary. Recent research using tagging techniques is showing a high amount of site fidelity, versus migratory behavior, by individual snapper and grouper fish at GRNMS. All indications are that food supply for the top predator fish species is abundant in GRNMS.

Other studies of acoustically-tagged snapper and grouper fish in GRNMS also seem to indicate site fidelity, making these resident fish more vulnerable to spearfishing. Although the overall level of spearfishing at GRNMS is low, recent research suggests that a very low level of increased fishing pressure on the sanctuary's ledges could reduce local abundance of snapper-grouper complex species within a short amount of time. Compared to the no action alternative, the proposed action is expected to prevent potential negative impacts to the sanctuary's large predatory fish species. This may in turn have a positive effect on the larger ecosystem as a whole by maintaining its natural balance.

NOAA has found no scientific references indicating decreased visibility changes the preference of larger fish as the target for spearfishermen, or that spearfishermen are unable to harvest larger fish because the larger fish swim away from them.

8. *Comment:* A study of private, boat-based spearfishing should be done to show the full socioeconomic impact of the proposed rule.

Response: Although NOAA did not conduct a study of private, boat-based spearfishing, the socioeconomic study showed the existence of adequate substitution areas for spearfishing in the vicinity of GRNMS for charter boats. This suggests that there are nearby opportunities as well for private-boat based spearfishing. Therefore, NOAA believes that any potential displacement caused by the proposed action could be mitigated by the presence of substitution areas.

9. *Comment:* Spearfishing opportunities are limited outside of GRNMS; GRNMS is best location for small boats.

Response: The socioeconomic survey shows there are multiple—and preferred—substitution areas to spearfish in the vicinity. Some of these are at a shorter distance from shore than GRNMS and thus a good destination for smaller boats.

10. *Comment:* The proposed rule is unnecessary because there are so few people spearfishing in GRNMS; therefore, the no action alternative is preferred.

Response: While the current number of divers spearfishing within GRNMS appears to be small, as stated above (*see* response to comment #7), spearfishing is an efficient harvesting gear that selectively targets larger fish relative to other fishing gears and can significantly alter abundance and size structure of targeted species toward fewer and smaller fish. Prohibition of all spearfishing gear in GRNMS will enhance enforcement for the prohibition against the use of powerheads. Allowing spearfishing at any level undermines the enforcement of this restriction. In addition, although the overall level of spearfishing at GRNMS is low, recent research suggests that a very low level of increased fishing pressure on the sanctuary's ledges could reduce local abundance of snapper-grouper complex species within a short amount of time.

11. *Comment:* NOAA should establish zones in the sanctuary where spearfishing would be allowed and zones where spearfishing would be prohibited instead of banning spearfishing gear throughout the sanctuary; or NOAA should at least conduct controlled impact studies of spearfishing in GRNMS.

Response: Given the priorities for resource protection and research and the relatively small size of GRNMS, zoning for allowed and prohibited spearfishing activities would be less effective, more difficult to enforce, and provide less protection to sanctuary resources. The costs associated with zoning (e.g., controlled impact studies, outreach and public awareness) and the complexities for user compliance and law enforcement would also complicate management of the sanctuary.

12. *Comment:* Spearfishing is beneficial and should not be eliminated from GRNMS for the following reasons:

• Spearfishing is a selective form of fishing with no bycatch;

• There is no marine debris associated with spearfishing;

• Spearfishermen could contribute to research data.

Response: NOAA acknowledges that spearfishing generates little marine debris. Nevertheless, spearfishing gear and ammunition shells associated with powerhead use have been found discarded (*i.e.,* debris) on the bottom at GRNMS. The properties of spearfishing gear are quite selective and thus could result in low waste (*e.g.,* regulatory discards or bycatch). As stated above (*see* response to comment #5) NOAA has determined that the operation of spearfishing gear can result in some regulatory discard. Also, the benefit of selectivity is dependent upon what the fisherman is selecting for and the ability of the targeted fish population to sustain the pressure. As noted above, the selectivity of spearfishing gear allows spearfishermen to often remove large individuals within the target population. A slight increase in the fishing pressure at GRNMS could lead to significant impact. Studies of areas where fishing pressure has been removed have shown that populations of spearfishing target species, often larger predatory fish such as snapper and grouper, have improved in size distribution and, often, in fish abundance. Studies also show that spearfishing can alter fish behavior. Fish are learning to hide from divers and sometimes move to less beneficial habitat as a result.

13. *Comment:* The proposed rule would unfairly restrict the number of fish allocated to spearfishermen and unfairly restrict access to spearfishing harvest.

Response: As described above in the responses to comments 8 and 9, numerous and preferred alternatives exist in the vicinity of GRNMS for charter spearfishing, thus access and harvest opportunities are not unfairly restricted.

14. *Comment:* The proposed rule punishes law-abiding spearfishermen who don't use prohibited powerheads in GRNMS.

Response: The reason for this action is not only to facilitate enforcement of the powerhead ban. It is also to protect sanctuary resources from the impacts of all spearfishing activities.

15. *Comment:* If spearfishing is banned in GRNMS, rod and reel fishing should also be banned; where fishing is allowed, spearfishing should be allowed.

Response: Impacts from spearfishing and impacts from rod and reel fishing differ. See response to comment #7 above.

16. *Comment:* The law enforcement rationale to prohibit spearfishing gear in GRNMS is flawed for the following reasons:

- Spearfishermen using powerheads and powerheaded fish should be easy to detect;
- The fact that there have been no law enforcement cases made in GRNMS of spearfishermen using powerheads indicates that powerhead use is not an issue;
- Evidence of powerhead use in GRNMS is unsubstantiated;
- Prohibiting the use of spearfishing gear will not result in effective law enforcement due to limited law enforcement resources.

Response: Although the use of powerheads is prohibited at GRNMS, powerhead spear tips and spent shells found in the sanctuary indicate that this gear has been used since the ban went into place. Powerheads are so closely associated with spearguns that it is difficult to determine from a distance whether a speargun has a powerhead. Because the powerhead may be removed without detection upon approach by enforcement, there may be difficulties proving that a speargun with a powerhead was in the sanctuary. Proof may not be self-evident from the fish itself, which may require forensic testing to determine, if possible, the method of injury or harvest sufficient for evidentiary purposes. Law enforcement officials have expressed the desire to prohibit the use of all spearguns in order to effectively enforce the powerhead prohibition. While NOAA acknowledges the need to increase enforcement presence in sanctuaries in general, the proposed action will better protect resources within the sanctuary by facilitating effective enforcement of the existing prohibition against the use of powerheads.

17. *Comment:* Law enforcement efforts should be increased to address concerns on the use of powerheads instead of banning all spearfishing gear.

Response: See response to comment #16 above. The way that powerheads are designed and used make them difficult to distinguish from spearguns that are not equipped with powerheads. Increasing enforcement effort for an activity that may be extremely difficult to detect is also not an efficient or reasonable approach to addressing the issue.

18. *Comment:* Spearfishing gear (*i.e.,* powerhead) is easily stowed away when not in use, so enforcement relies largely on the rare coincidence of an officer watching while spearfishing gear is pulled out or is already in use.

Response: NOAA agrees that there is difficulty in enforcing the existing regulation prohibiting spearfishing with a powerhead because the gear can be easily concealed or discarded without detection. See response to comment 19.

19. *Comment:* A complete ban on spearfishing gear in GRNMS will aid law enforcement in the sanctuary; powerhead equipment can be jettisoned without notice during an approach by law enforcement personnel.

Response: NOAA agrees that law enforcement will be greatly enhanced with a prohibition on all spearfishing gear and with the "no stopping" provision for transit if spearfishing gear is on board. As noted above, illegal powerhead spearfishing is difficult to detect when spearfishing gear is allowed. Powerheads are generally small attachments to spearfishing gear that allow the use of ammunition cartridges to harvest fish. The close association between a speargun and a powerhead makes it difficult for law enforcement officers to detect from a distance. A powerhead can also easily be jettisoned, hidden or dropped into the water.

20. *Comment:* NOAA should prohibit all non-research activities in GRNMS to enhance law enforcement capacity, which is subject to insufficient resources, and to achieve the purposes of the NMSA and GRNMS designation.

Response: The scope of this action is limited to problems related to spearfishing and enforcement of the prohibition of powerhead spearfishing in particular. Prohibiting spearguns is necessary to ensure adequate law enforcement of the powerhead prohibition. In addition to the primary purpose of resource protection under the National Marine Sanctuaries Act (NMSA), one of the purposes of the national marine sanctuaries is to "to facilitate to the extent compatible with the primary objective of resource protection, all public and private uses of the resources of these marine areas not prohibited pursuant to other authorities" (16 U.S.C. 1431(b)(6)). Therefore, NOAA believes that banning all recreational activities throughout GRNMS to enhance law enforcement is not consistent with the purposes and policies of the NMSA.

21. *Comment:* No fishing of any kind should be permitted in any marine sanctuary.

Response: Each sanctuary in the national marine sanctuary system is unique. One of the purposes and policies of the NMSA is to "facilitate to the extent compatible with the primary objective of resource protection, all public and private uses of the resources of these marine areas not prohibited pursuant to other authorities." Given this mandate, NOAA must consider all uses of a marine sanctuary and make a

case-by-case determination of compatibility with the Act's primary objective of resource protection.

22. *Comment:* Spearfishing is a threat to the purpose and goals of GRNMS and the primary purpose of resource protection.

Response: NOAA agrees that given the circumstances and conditions at GRNMS continued spearfishing, particularly with powerheads, would make harvest of large snapper-grouper species more likely and could complicate achievement of GRNMS goals as outlined in the purposes for designation of the sanctuary and in the purposes and policies of the NMSA.

23. *Comment:* Although NOAA appears unable to provide specific data as to the quantity of spearfishing that occurs in GRNMS, a spearfishing ban will likely address at least one of the causes for declines in larger fish and fish populations and is worth adopting.

Response: As noted above, impacts from spearfishing and impacts from rod and reel fishing differ. Spearfishing has generally been shown to target larger fish and remove more biomass per unit of effort than recreational fishermen using rod and reel gear. A recent 2008 study found that free-diving (non-SCUBA) spearfishermen removed larger fish than rod and reel fishermen and that they removed more biomass per unit of effort, if baitfish are excluded. The study also noted that SCUBA-supported spearfishing is likely to have a significantly greater catch per unit of effort than that found in their study. The intrinsic vulnerability of fish populations under pressure is exacerbated by spearfishing. The effectiveness and efficiency of SCUBA-supported spearfishing have resulted in bans on this activity in numerous parts of the world.

A ban on spearfishing will protect resources. NOAA will continue to monitor fish size and abundance in GRNMS after the prohibition is in place, using that information to detect changes to the larger fish population over time. NOAA agrees that a ban on all spearfishing gear in GRNMS and a provision to transit without stopping if spearfishing gear is on board a vessel will enhance NOAA's ability to protect fish and other natural marine resources, particularly fish of the snapper-grouper species complex which are in decline regionally.

24. *Comment:* There should be no spearfishing allowed in GRNMS; a decline in abundance and size of targeted fish species in GRNMS is cause to ban spearfishing gear.

Response: NOAA has determined that the preferred alternative to prohibit all spearfishing gear in GRNMS will enhance the capabilities of law enforcement to protect resources such as large, reproductively-valuable individual fish in the sanctuary. Compared to the no action alternative, the proposed action is expected to prevent potential negative impacts, and as a result to improve, measurably but not significantly, the condition of sanctuary's biological resources.

According to NOAA's National Marine Fisheries Service, some reef-associated fish species are regionally overfished (snowy grouper, black sea bass and red porgy), approaching overfished status (gag) and/or undergoing overfishing (vermilion snapper, red snapper, snowy grouper, red grouper, black sea bass, gag, speckled hind, warsaw grouper, tilefish and black grouper). Gag and scamp have decreased in abundance in visual census transects at GRNMS, and length-frequency measurements of black sea bass, gag and scamp (from trap and visual census data) indicate that a large portion of the population is removed upon reaching minimum size, either by fishing or by migration out of the sanctuary. The reduced abundance of selected key species may inhibit full community development and function in GRNMS.

25. *Comment:* Spearfishing by its nature encourages taking of reproductively mature (larger), more successful members of the fisheries communities at GRNMS; therefore, spearfishing should be banned in GRNMS.

Response: NOAA agrees. See response to comment #7.

26. *Comment:* Spearfishing activities are increasing; there is more efficiency with the current use of camouflage wetsuits, mirrored lenses in dive masks, and more powerful spearguns.

Response: NOAA shares concerns expressed by this commenter that gear is available to spearfishing enthusiasts for the purpose of increasing spearfishing harvest efficiency. That concern highlights the need to protect the limited resources in GRNMS from activities that could reduce predator fish abundance thus altering the natural live-bottom community of the sanctuary.

27. *Comment:* How will the presence of increased numbers of large predatory fish impact other smaller fish species and the availability of food for other residents of the reef?

Response: Increased numbers of large predatory fish in GRNMS would be expected to result in a more natural community balance. Scientists, in fact, have commented on the absence of numbers of large predatory fish which would be expected to be found in GRNMS. Reduction/absence in the larger predatory fishes can have a "top-down" effect on fish assemblages by allowing other fish populations to increase, altering the composition of the overall natural community of species, including invertebrates. The largest fish are important as predators in maintaining a balanced and complete ecosystem; their selective removal causes ecological imbalance.

28. *Comment:* No studies have been done on the effects of the no-anchoring rule, which was banned in part to prevent spearfishermen from taking fish around anchor lines.

Response: The prohibition on anchoring in GRNMS was adopted to protect bottom habitat from anchor damage, thus enhancing the overall health of the sanctuary's natural systems that depend on the hard bottom and the invertebrates attached and growing (71 FR 60055). The purpose of the anchor prohibition was not related to the prevention of spearfishing around anchor lines.

29. *Comment:* Stop commercial fishing to protect fish instead of banning spearfishing gear in GRNMS.

Response: GRNMS regulations allow only rod and reel, handline, and spearfishing gear without powerheads. There is little to no indication that commercial fishing takes place in GRNMS.

30. *Comment:* Some spearfishermen may want to just dive without spearing in GRNMS when transiting through the sanctuary after a spearfishing trip further offshore, but they are not permitted to stop with spearfishing gear on board.

Response: NOAA considered an alternative allowing boats to stop in the sanctuary with spearfishing gear, provided it was stowed and unavailable for use. That alternative was eliminated because NOAA found that it did not meet the purpose and need for this action. The ability to more effectively enforce GRNMS regulations, one of the purposes of this action, would be further compromised under this alternative. Law enforcement officials have expressed concerns about enforcing a provision that would allow stopping when spearfishing gear is on board even if it is stowed.

31. *Comment:* Fishing pressure will increase on other areas outside of GRNMS, and/or rod and reel fishing will increase in GRNMS while spearfishing increases outside of GRNMS.

Response: NOAA acknowledges that fishing pressure could increase outside of GRNMS as a result of this action.

However, given the relatively small amount of spearfishing that seems to occur in GRNMS, and the indication from surveys that most spearfishing activity already occurs outside of the sanctuary, a prohibition on spearfishing is not likely to result in significant changes in fishing activities in or outside of the sanctuary.

32. *Comment:* Size limits could address the problem of spearfishing selectively targeting larger fish.

Response: NOAA interprets the comment to mean that rather than banning spearfishing altogether, NOAA should consider banning the take of large fish by spearfishing (*i.e.,* maximum size limit). The suggestion provided by the commenter would not address the powerhead ban enforcement issue, which is one of the purposes of this action.

33. *Comment:* NOAA should limit fishing to only those fish species that are not at risk (*e.g.,* king mackerel) to address the mandate to protect resources while allowing compatible uses.

Response: This comment is suggesting that NOAA should restrict all kinds of fishing activities and gear, limiting them only to fish species that are not at risk. This is beyond the scope of this action (*see* response to comments #20, 21, 22).

34. *Comment:* NOAA should postpone a decision on the proposed rule and work with spearfishermen to thoroughly research the issue.

Response: NOAA postponed its previous decision to ban spearfishing in 2006, for the purpose of gathering further socioeconomic information on the impact of a possible ban on all spearfishing in GRNMS. In addition, NOAA has thoroughly researched the possible detrimental effects to the natural marine resources of GRNMS that NOAA is mandated to protect. Therefore, NOAA is satisfied with the level of information on natural marine resources as well as socioeconomic impact used as a basis for this action.

V. References for Citations

All references that NOAA used as a basis for this rule may be found in the environmental assessment (EA), which is available as specified in the **ADDRESSES** section.

List of Subjects in 15 CFR Part 922

Administrative practice and procedure, Coastal zone, Fishing gear, Marine resources, Natural resources, Penalties, Recreation and recreation areas, Wildlife.

(Federal Domestic Assistance Catalog Number 11.429 Marine Sanctuary Program)

Dated: February 2, 2010.

Holly Bamford,

Acting Assistant Administrator for Ocean Services and Coastal Zone Management.

■ Accordingly, for the reasons set forth above, NOAA is amending part 922, title 15 of the Code of Federal Regulations, as follows:

PART 922—NATIONAL MARINE SANCTUARY PROGRAM REGULATIONS

■ 1. The authority citation for part 922 continues to read as follows:

Authority: 16 U.S.C. 1431 et seq.

■ 2. Amend § 922.92:

■ a. By revising paragraph (a)(5)(i);

■ b. By revising paragraph (a)(6);

■ c. And by adding a new paragraph (a)(11).

The revisions and addition read as follows:

§ 922.92 Prohibited or otherwise regulated activities.

(a) * * *

(5) * * *

(i) Injuring, catching, harvesting, or collecting, or attempting to injure, catch, harvest, or collect, any marine organism, or any part thereof, living or dead, within the Sanctuary by any means except by use of rod and reel, and handline gear;

* * * * *

(6) Using any fishing gear within the Sanctuary except rod and reel, and handline gear, or for law enforcement purposes.

* * * * *

(11) Possessing or carrying any fishing gear within the Sanctuary except:

(i) Rod and reel, and handline gear;

(ii) Fishing gear other than rod and reel, handline gear, and spearfishing gear, provided that it is stowed on a vessel and not available for immediate use;

(iii) Spearfishing gear provided that is stowed on a vessel, not available for immediate use, and the vessel is passing through the Sanctuary without interruption; and

(iv) For law enforcement purposes.

* * * * *

[FR Doc. 2010–2808 Filed 2–18–10; 8:45 am]

BILLING CODE 3510–NK–P

DEPARTMENT OF LABOR

Employment and Training Administration

20 CFR Part 655

Wage and Hour Division

29 CFR Part 501

Announcement of Public Briefings on the Changes to the Labor Certification Process for the Temporary Agricultural Employment of H–2A Aliens in the United States

AGENCIES: Employment and Training Administration and Wage and Hour Division; Department of Labor.

ACTION: Notice of meeting.

SUMMARY: On February 12, 2010, the Department of Labor (the Department or DOL) amended the H–2A regulations at 20 CFR part 655 governing the certification of temporary employment of nonimmigrant workers in temporary or seasonal agricultural employment. *See,* Temporary Agricultural Employment of H–2A Aliens in the United States, Final Rule, 75 FR 6884, Feb. 12, 2010 (the Final Rule). The Department's Final Rule also amended the regulations at 29 CFR part 501 to provide for enhanced enforcement under the H–2A program requirements when employers fail to meet their obligations under the H–2A program. The Department has also made changes to the *Application for Temporary Employment Certification,* ETA Form 9142.

The Final Rule will become effective on March 15, 2010. All H–2A program users will be required to file their applications under the new regulations, and to comply with all applicable program requirements.

The Department is issuing this notice to announce that it has scheduled three public briefings to educate stakeholders, program users, and other interested members of the public on changes to the H–2A program made by the Final Rule and on applying for H–2A temporary labor certifications under the new regulations using the ETA Form 9142.

As currently planned, the three briefings will take place in late February and early March of 2010 in San Diego, California; Dallas, Texas; and Raleigh, North Carolina. This notice provides the public with locations, dates, and registration information regarding the briefings. These briefings are subject to change and/or cancellation without further notice in the **Federal Register**. However, the Department will notify

registered participants of any changes to the briefings.

DATES:

1. Tuesday, February 23, 2010, San Diego, California.

   Time: 8:30 a.m.–3 p.m.

2. Thursday, February 25, 2010, Dallas, Texas.

   Time: 8:30 a.m.–3 p.m.

3. Tuesday, March 2, 2010, Raleigh, North Carolina.

   Time: 8:30 a.m.–3 p.m.

ADDRESSES: The meeting locations are:

1. San Diego—San Diego Marriott Hotel and Marina, 333 West Harbor Drive, San Diego CA 92101, *Tel:* 1–619–234–1500, *fax:* 1–619–234–8678.
2. Dallas—Anatole Hilton, 2201 Stemmons Freeway, Dallas, TX 75207, *Tel:* 1–214–748–1200, *fax:* 1–214–761–7520.
3. Raleigh—Hilton North Raleigh, 3415 Wake Forest Road, Raleigh, NC 27609, *Tel:* 1–919–872–2323, *fax:* 1–919–876–0890.

To Register: To register for a briefing session please complete the registration process on-line, by visiting *www.acclaroresearch.com/oflcbriefings.* Due to space considerations, attendance will be limited to those who register online. In the event of cancellation or change, participants will be notified.

FOR FURTHER INFORMATION CONTACT: For further information regarding the Employment and Training Administration's portion of the briefings, contact William L. Carlson, PhD, Administrator, Office of Foreign Labor Certification, Employment and Training Administration, 200 Constitution Avenue, NW., Room C–4312, Washington, DC 20210; *Telephone:* (202) 693–3010 (this is not a toll-free number).

For further information regarding the Wage and Hour Division's portion of the briefings, contact James Kessler, Farm Labor Branch Chief, Wage and Hour Division, U.S. Department of Labor, 200 Constitution Avenue, NW., Room S–3510, Washington, DC 20210; Telephone (202) 693–0070 (this is not a toll-free number). Please do not call these offices to register as they cannot accept registrations.

SUPPLEMENTARY INFORMATION: The registration information should be used by any member of the public planning to attend a briefing session.

Signed in Washington, DC, this 16th day of February 2010.

Jane Oates,

Assistant Secretary, Employment and Training Administration.

Nancy Leppink,

Deputy Administrator, Wage and Hour Division.

[FR Doc. 2010–3282 Filed 2–16–10; 4:15 pm]

BILLING CODE 4510–FP–P

FEDERAL COMMUNICATIONS COMMISSION

47 CFR Part 79

[CG Docket No. 05–231; FCC 09–109]

Closed Captioning of Video Programming

AGENCY: Federal Communications Commission.

ACTION: Final rule.

SUMMARY: In this document, the Commission amends the closed captioning rules to add another method by which video programming distributors may provide contact information to the Commission for the handling of immediate closed captioning concerns and written closed captioning complaints.

DATES: 47 CFR 79.1(i)(3), published at 74 FR 1594, January 13, 2009, and the revisions in this document are effective February 19, 2010.

FOR FURTHER INFORMATION CONTACT: Amelia Brown, Consumer and Governmental Affairs Bureau, Disability Rights Office at (202) 418–2799 (voice), (202) 418–7804 (TTY), or e-mail at *Amelia.Brown@fcc.gov.*

SUPPLEMENTARY INFORMATION: This is a summary of the Commission's document FCC 09–109, *Closed Captioning of Video Programming,* CG Docket No. 05–231, Order, adopted December 4, 2009, and released December 11, 2009. The full text of document FCC 09–109 and copies of any subsequently filed documents in this matter will be available for public inspection and copying during regular business hours at the FCC Reference Information Center, Portals II, 445 12th Street, SW., Room CY–A257, Washington, DC 20554. Document FCC 09–109 and copies of subsequently filed documents in this matter also may be purchased from the Commission's duplicating contractor at Portals II, 445 12th Street, SW., Room CY–B402, Washington, DC 20554. Customers may contact the Commission's duplicating contractor at its Web site *http://www.bcpiweb.com* or by calling 1–800–378–3160.

To request materials in accessible formats for people with disabilities (Braille, large print, electronic files, audio format), send an e-mail to *fcc504@fcc.gov* or call the Consumer and Governmental Affairs Bureau at (202) 418–0530 (voice) or (202) 418–0432 (TTY). Document FCC 09–109 also can be downloaded in Word or Portable Document Format (PDF) at: *http://www.fcc.gov/cgb/dro/caption.html.*

Synopsis

1. On November 7, 2008, the Commission released *Closed Captioning of Video Programming, Closed Captioning Requirements for Digital Television Receivers,* CG Docket No. 05–231, ET Docket No. 99–254, Declaratory Ruling, Order, and Notice of Proposed Rulemaking, FCC 08–255 (*2008 Closed Captioning Order*), published at 74 FR 1594, January 13, 2009, which, among other things, requires video programming distributors to provide the Commission with contact information for the handling of immediate closed captioning concerns and written closed captioning complaints. Specifically, in a new § 79.1(i)(3) of its rules, the Commission required video programming distributors to file the required contact information with the Chief of the Disability Rights Office, Consumer and Governmental Affairs Bureau, or by sending the information to *CLOSEDCAPTIONING_POC@fcc.gov.*

2. In anticipation of a large number of submissions and volume of information the Commission expects to receive, it has established an electronic webform as an additional method by which video programming distributors may submit their contact information to the Commission. To submit their contact information in this manner, video programming distributors will enter contact information in specific fields and, once submitted, this information will be available almost immediately for online searching by the public. This approach will promote compliance with the rule by facilitating the submission and availability of complete and accurate contact information. While video programming distributors may use any of the three methods described in § 79.1(i)(3), the Commission encourages video programming distributors to submit their contact information through this online, self-service webform. Because this additional method of providing contact information was not provided for in the *2008 Closed Captioning Order* or in § 79.1(i)(3) of the Commission's rules, the Commission is amending § 79.1(i)(3)

of its rules to allow for the filing of contact information through a webform.

Congressional Review Act

The Commission has sent a copy of the document FCC 09–109 in a report to be sent to Congress and the Government Accountability Office pursuant to the Congressional Review Act.

Ordering Clause

Pursuant to 47 U.S.C. 154(i), 303(r) and 613, document FCC 09–109 is adopted.

List of Subjects in 47 CFR Part 79

Cable television operators, Multichannel video programming distributors (MVPDs), Satellite television service providers, Television broadcasters.

Federal Communications Commission.

Marlene H. Dortch,

Secretary.

Rule Changes

■ For the reasons discussed in the preamble, the Federal Communications Commission amends 47 CFR part 79 to read as follows:

PART 79—CLOSED CAPTIONING OF VIDEO PROGRAMMING

■ 1. The authority citation for part 79 continues to read as follows:

Authority: 47 U.S.C. 151, 152(a), 154(i), 303, 307, 309, 310, 613.

■ 2. Section 79.1 is amending by revising paragraph (i)(3) to read as follows:

§ 79.1 Closed captioning of video programming.

* * * * *

(i) * * *

(3) *Providing contact information to the Commission.* Video programming distributors shall file the contact information described in this section with the Commission in one of the following ways: through a webform located on the FCC website; with the Chief of the Disability Rights Office, Consumer and Governmental Affairs Bureau; or by sending an e-mail to *CLOSED CAPTIONING_POC@fcc.gov*. Contact information shall be available to consumers on the FCC Web site or by telephone inquiry to the Commission's Consumer Center. Distributors shall notify the Commission each time there is a change in any of this required information within 10 business days.

* * * * *

[FR Doc. 2010–3264 Filed 2–18–10; 8:45 am]

BILLING CODE 6712–01–P

FEDERAL COMMUNICATIONS COMMISSION

47 CFR Part 79

[CG Docket No. 05–321; FCC 09–71]

Closed Captioning of Video Programming

AGENCY: Federal Communications Commission.

ACTION: Final rule; stay of effectiveness.

SUMMARY: In this document, the Commission temporarily stays the effectiveness of the closed captioning rule that requires video programming distributors in certain circumstances to forward closed captioning complaints to third parties. Because the "forwarding" requirement contained in the rule may conflict with statutory provisions under the Communications Act (the Act), a stay is appropriate pending review by the Commission of the "forwarding" provision of the rule.

DATES: 47 CFR 79.1(g)(3), published at 74 FR 1594, January 13, 2009, is stayed beginning February 19, 2010.

FOR FURTHER INFORMATION CONTACT: Amelia Brown, Consumer and Governmental Affairs Bureau, Disability Rights Office at (202) 418–2799 (voice), (202) 418–7804 (TTY), or e-mail at *Amelia.Brown@fcc.gov.*

SUPPLEMENTARY INFORMATION: This is a summary of the Commission's Order, FCC 09–71, *Closed Captioning of Video Programming,* CG Docket No. 05–231, Order Suspending Effective Date, adopted September 8, 2009, and released December 11, 2009. The full text of FCC 09–71 and copies of any subsequently filed documents in this matter will be available for public inspection and copying during regular business hours at the FCC Reference Information Center, Portals II, 445 12th Street, SW., Room CY–A257, Washington, DC 20554. FCC 09–71 and copies of subsequently filed documents in this matter also may be purchased from the Commission's duplicating contractor at Portals II, 445 12th Street, SW., Room CY–B402, Washington, DC 20554. Customers may contact the Commission's duplicating contractor at its Web site *http://www.bcpiweb.com* or by calling 1–800–378–3160.

To request materials in accessible formats for people with disabilities (Braille, large print, electronic files, audio format), send an e-mail to *fcc504@fcc.gov* or call the Consumer and Governmental Affairs Bureau at (202) 418–0530 (voice) or (202) 418–0432 (TTY). FCC 09–71 also can be downloaded in Word or Portable Document Format (PDF) at: *http://www.fcc.gov/cgb/dro/caption.html.*

Synopsis

1. On November 7, 2008, the Commission released *Closed Captioning of Video Programming, Closed Captioning Requirements for Digital Television Receivers,* CG Docket No. 05–231, ET Docket No. 99–254, Declaratory Ruling, Order, and Notice of Proposed Rulemaking, FCC 08–255, (*2008 Closed Captioning Order*), published at 74 FR 1594, January 13, 2009, which, among other things, requires video programming distributors in certain circumstances to forward closed captioning complaints to third parties. Such a requirement, however, appears to conflict with certain provisions of the Act that prohibit disclosure of personally identifiable information to third parties. To avoid placing video programming distributors in the untenable position of having to choose whether to comply with the closed captioning rule or with a conflicting statutory provision, the Commission temporarily suspends the effective date of the rule while the Commission considers how to revise it.

2. Specifically, amended 47 CFR 79.1(g)(3), adopted in the *2008 Closed Captioning Order,* appears to conflict with the prohibitions contained in Sections 631(c) and 338(i) of the Act. In particular, cable or satellite operators would violate these provisions if they complied with 47 CFR 79.1(g)(3) by forwarding complaints containing a subscriber's personal information without first obtaining the subscriber's consent to disclose personally identifiable information. Given this apparent conflict, the Commission finds good cause to suspend the effective date of 47 CFR 79.1(g)(3) temporarily without prior notice and comment. Because allowing this rule to take effect would subject companies to conflicting legal obligations, the Commission finds that seeking comment on whether to suspend the rule would be impractical, unnecessary, and contrary to the public interest. The Commission intends to issue a notice of proposed rulemaking to seek comment on a revised rule for handling closed captioning complaints, to replace 47 CFR 79.1(g)(3) as adopted in the *2008 Closed Captioning Order.*

Congressional Review Act

The Commission will send a copy of the *Order Suspending Effective Date* in a report to be sent to Congress and the Government Accountability Office pursuant to the Congressional Review Act.

Ordering Clause

Pursuant to 47 U.S.C. 154(i), 303(r) and 613, the *Order Suspending Effective Date* is adopted.

Federal Communications Commission.

Marlene H. Dortch,

Secretary.

[FR Doc. 2010–3267 Filed 2–18–10; 8:45 am]

BILLING CODE 6712–01–P

FEDERAL COMMUNICATIONS COMMISSION

47 CFR Part 79

[CG Docket No. 05–231; ET Docket No. 99–254; FCC 08–255]

Closed Captioning of Video Programming; Closed Captioning Requirements for Digital Television Receivers

AGENCY: Federal Communications Commission.

ACTION: Final rule; announcement of effective date.

SUMMARY: In this document, the Commission announces that the Office of Management and Budget (OMB) has approved, for a period of three years, the information collection associated with the Commission's *Closed Captioning of Video Programming; Closed Captioning Requirements for Digital Television Receivers,* Declaratory Ruling and Order (*2008 Closed Captioning Order*). This notice is consistent with the *2008 Closed Captioning Order,* which stated that the Commission would publish a document in the **Federal Register** announcing the effective date of those rules.

DATES: 47 CFR 79.1(g)(1) through (5), (i), published at 74 FR 1594, January 13, 2009, is effective February 19, 2010. Video programming distributors must comply with 47 CFR 79.1(i) by March 22, 2010.

FOR FURTHER INFORMATION CONTACT: Amelia Brown, Disabilities Rights Office, Consumer and Governmental Affairs Bureau, at (202) 418–2799 (voice) or (202) 418–7804 (TTY).

SUPPLEMENTARY INFORMATION: This document announces that, on July 27, 2009, OMB approved, for a period of three years, the information collection requirements contained in the Commission's *2008 Closed Captioning Order,* FCC 08–255, published at 74 FR 1594, January 13, 2009. The OMB Control Number is 3060–0761. The Commission publishes this notice as an announcement of the effective date of the rules. If you have any comments on the burden estimates listed below, or how the Commission can improve the collections and reduce any burdens caused thereby, please contact Cathy Williams, Federal Communications Commission, Room 1–C823, 445 12th Street, SW., Washington, DC 20554. Please include the OMB Control Number, 3060–0761, in your correspondence. The Commission will also accept your comments via the Internet if you send them to *PRA@fcc.gov.* To request materials in accessible formats for people with disabilities (braille, large print, electronic files, audio format), send an e-mail to *fcc504@fcc.gov* or call the Consumer and Governmental Affairs Bureau at (202) 418–0530 (voice), (202) 418–0432 (TTY).

Synopsis

As required by the Paperwork Reduction Act of 1995 (44 U.S.C. 3507), the FCC is notifying the public that it received OMB approval on July 27, 2009, for the information collection requirements contained in the Commission's rules at 47 CFR 79.1(g)(1) through (5) and 47 CFR 79.1(i). The OMB Control Number is 3060–0761. The total annual reporting burden for respondents for these collections of information, including the time for gathering and maintaining the collection of information, is estimated to be: 14,283 respondents, 111,247 responses, a total annual hourly burden of 226,452 hours, and $38,283,630 in total annual costs.

Under 5 CFR 1320, an agency may not conduct or sponsor a collection of information unless it displays a current, valid OMB Control Number.

No person shall be subject to any penalty for failing to comply with a collection of information subject to the Paperwork Reduction Act, that does not display a current, valid OMB Control Number. The foregoing notice is required by the Paperwork Reduction Act of 1995, Public Law 104–13, October 1, 1995, and 44 U.S.C. 3507.

Federal Communications Commission.

Marlene H. Dortch,

Secretary.

[FR Doc. 2010–3265 Filed 2–18–10; 8:45 am]

BILLING CODE 6712–01–P

DEPARTMENT OF TRANSPORTATION

National Highway Traffic Safety Administration

49 CFR Part 571

[Docket No. NHTSA–2010–0015

RIN 2127–AK60

Federal Motor Vehicle Safety Standards; Door Locks and Door Retention Components

AGENCY: National Highway Traffic Safety Administration (NHTSA), Department of Transportation (DOT).

ACTION: Final rule; response to petitions for reconsideration; technical amendments.

SUMMARY: This final rule responds to petitions for reconsideration of a February 6, 2007 final rule that amended Federal Motor Vehicle Safety Standard No. 206 to add and update requirements and test procedures and to harmonize with the world's first global technical regulation for motor vehicles. This is the second of two documents responding to the petitions; an earlier final rule delayed the compliance date of the sliding door provisions for a year. In today's document, the agency is granting some aspects of the petitions while denying other aspects, and makes several technical amendments to the regulatory text.

DATES: This rule is effective February 19, 2010. Any petitions for reconsideration of today's final rule must be received by NHTSA not later than April 5, 2010.

ADDRESSES: If you wish to petition for reconsideration of this rule, your petition should refer to the docket number and be submitted to: Administrator, National Highway Traffic Safety Administration, 1200 New Jersey Avenue, SE., West Building, 4th Floor, Washington, DC 20590. Note that all documents received will be posted without change to the docket, including any personal information provided. Please see the Privacy Act discussion under the section entitled, Rulemaking Analyses and Notices.

FOR FURTHER INFORMATION CONTACT: For technical issues, contact Ms. Shashi Kuppa, Office of Crashworthiness Standards, by telephone at (202) 366–4902, or by fax at (202) 366–2990. For legal issues, contact Ms. Sarah Alves, Office of the Chief Counsel, by telephone at (202) 366–2992, or by fax at (202) 366–3820.

Both persons may be reached by mail at the following address: National Highway Traffic Safety Administration,

U.S. Department of Transportation, 1200 New Jersey Avenue, SE., Washington, DC 20590.

SUPPLEMENTARY INFORMATION:

Table of Contents

I. Background
II. Summary of Responses to Petitions for Reconsideration
a. NHTSA's Part I Response
b. Today's Part II Response
III. Technical Issues
a. Sliding Door Requirements and Test Procedures
1. Test Force Application Duration
2. Test Force Application Load Plate Positioning
3. Test Force Application Load Plate Rotation
4. Closure Warning Devices
b. Exclusion of Wheelchair Lift Doors
IV. Other Issues
a. Correction of S5.1.1.4(b)(2)
b. Technical Amendment to Figure 7
c. Distinguishing Between Primary and Auxiliary Door Latches
d. Certification Information
e. Applicability of the Standard to Vehicles Over 10,000 lb GVWR
V. GTR Process
VI. Rulemaking Analyses and Notices

I. Background

Summary of 2007 Final Rule

In this document, NHTSA responds to petitions for reconsideration of its February 6, 2007 final rule adding and updating requirements and test procedures for Federal Motor Vehicle Safety Standard (FMVSS) No. 206, *Door Locks and Door Retention Components* (49 CFR 571.206) (72 FR 5385; Docket No. NHTSA–2006–23882). That rule improved FMVSS No. 206 in several areas, and harmonized with the world's first global technical regulation (GTR) for motor vehicles.[1] Consistent with the GTR, the final rule retained all previously existing provisions in the standard, but added a new full vehicle test procedure for sliding doors, added secondary latched position requirements for doors other than hinged side doors and back doors, provided a new optional test procedure for assessing inertial forces, and extended the application of FMVSS No. 206 to buses with a gross vehicle weight rating (GVWR) of 10,000 pounds (lb) or less, including 12–15 passenger vans. The final rule also eliminated an exclusion from the requirements of the standard for doors equipped with wheelchair platform lifts. The effective date for the final rule was September 1, 2009.

Petitions for Reconsideration

In response to the February 2007 final rule, NHTSA received petitions for reconsideration from the Alliance of Automobile Manufacturers (the Alliance), Ford Motor Company (Ford), Advocates for Highway Safety (Advocates), and Thomas Built Buses, Inc. (Thomas Built Buses). The suggestions of each of the petitioners are summarized below:

- The Alliance petitioned to change the requirements and test procedures for sliding doors and to extend the effective date of the final rule.
- Ford petitioned NHTSA to extend the effective date of the final rule or at a minimum change the date as it pertains to sliding doors.
- Advocates questioned the GTR procedure under which the February 2007 final rule was developed. It also petitioned the agency to require sliding doors latches to have secondary latching positions and to remove the option for a visual door closure warning system.
- Thomas Built Buses petitioned the agency to reinstate the exclusion for wheelchair lift doors on buses with lift platforms that retracts to provide a barrier to occupants being ejected.

The agency also received a letter from the TriMark Corporation (TriMark), which sought clarification of some provisions of the February 2007 final rule.

II. Summary of Responses to Petitions for Reconsideration

a. NHTSA's Part I Response

To accommodate manufacturers' design and production cycles while allowing the agency more time to analyze the petitions in regards to other issues, the agency published a final rule on July 20, 2009 that delayed the compliance date of the sliding door provisions of S4.2.2 from September 1, 2009, to September 1, 2010. (74 FR 35131; Docket No. NHTSA 2009–0116.) The original effective date of September 1, 2009 for all other provisions was retained. In that final rule, the agency explained that the other issues raised in the petitions for reconsideration would be addressed by the agency in a subsequent document, which we are issuing today.

b. Today's Part II Response

Today's final rule makes the following technical changes to the 2007 final rule. This final rule amends—

- S5.2.2.4(a), to specify a time requirement instead of a load application rate of the sliding door test, which considers the Alliance request while paralleling the GTR requirements;
- S5.2.2.3(f), S5.2.2.3(g)(3), and S5.2.2.3(h)(3), to more accurately specify sliding door test force application load plate positioning;
- S5.2.2.3(f)(1)(ii), S5.2.2.3(g)(1)(ii), and S5.2.2.3(h)(1)(ii), to better define the allowable rotation for test plates; and,
- S4, to reinstate an exclusion of doors equipped with wheelchair lift systems.
- This final rule also corrects provisions in the standard for closing windows and tethering doors during the test (S5.1.1.4(b)(2)(i)(C)), and amends Figure 7 to make the vehicle coordinate reference system for inertial testing consistent with Society of Automotive Engineers (SAE) Standard J211 (Instrumentation for Impact Test) and with the sign conventions used in other Federal motor vehicle safety standards such as FMVSS No. 208, *Occupant Crash Protection,* and FMVSS No. 214, *Side Impact Protection.*

In addition to the above, this final rule responds to the petitions by clarifying or explaining provisions of the 2007 final rule. We also respond to, and deny, Advocates' request that sought a determination that the GTR process under which the final rule was developed is flawed and contrary to the rulemaking procedures required by the Administrative Procedure Act.

III. Technical Issues

a. Sliding Door Requirements and Test Procedures

1. Test Force Application Duration

The February 2007 final rule required that the sliding door test procedure load rate application be applied at any rate not to exceed 2,000 newtons (N) per minute (N/min), until a force of 9,000 N is achieved on each force application device or until either force application device reaches a total displacement of 300 mm (S5.2.2.4(a)). The maximum load is held for 30 seconds.

In its petition for reconsideration, the Alliance requested that NHTSA shorten the load application rate for the sliding door system test procedure. The Alliance stated that testing in accordance with the specifications in S5.2.2.4(a) will require a minimum of 4.5 minutes, because S4.2.2.1 specifies that the "track and slide combination or other supporting means for each sliding door, while in the closed fully latched position, shall not separate from the door frame when a total force of 18,000

[1] The U.S. is a Contracting Party of the 1998 Global Agreement which is administered by the U.N. Economic Commission for Europe's World Forum for the Harmonization of Vehicle Regulations (WP.29). The U.S. voted in favor of establishing the GTR at the November 18, 2004 Session of the Executive Committee and was obligated under the Agreement to initiate the process for adopting the provisions of the GTR.

N [9,000 N on each side of the door] along the vehicle transverse axis is applied to the door as specified in S5.2.2." (Dividing the test load, 9,000 N, by the maximum allowable rate of 2,000 N/min produces a duration of approximately 4.5 minutes for each test.) The Alliance requested shortening the test duration to achieve the required force loading in 30 seconds.

The Alliance provided several reasons for its request. The petitioner stated that longer test durations introduce "creep," or minor sheet metal deformations, that are not representative of the loading that might be experienced in a dynamic crash situation where loads are applied for a fraction of a second.[2] To illustrate the occurrence of these deformations under sustained load, the Alliance provided the results of a developmental sliding door test that was conducted using a 29-second load application, followed by a 28-second hold, and then a ramp to overload (see Graphs A, B and C in the Alliance petition, Docket No. NHTSA–2006–23882–0007). The figures show that, after the load was stabilized, 29 seconds into the test (33 seconds after the start of data collection as shown in Graph A of the petition) and during the period while the load was held constant, the rear load actuator displaced transversely 6 millimeters (mm) (Graph B) and the upper rear point on the door displaced transversely 8 mm (Graph C).

In its petition, the Alliance stated its belief that because most of the testing that supported the development of the GTR was performed using 10-second load applications, "[m]odifying the procedure in a manner that lengthens the load application duration by a factor of 27 may call into question the cost-benefit analysis" in NHTSA's Final Regulatory Evaluation (FRE) (Docket No. NHTSA–2006–23882–0002). The Alliance stated that this is because the FRE estimated benefits by comparing the occupant ejection rate through sliding doors equipped with one versus two latches, and estimated costs as those of adding a second latch and striker to vehicles equipped with a single latch. The Alliance implies that the FRE costs may be too low or incomplete because, the petitioner believes, supporting the test loads over a longer period of time may ultimately require additional structure in the vehicle, and such changes were not addressed in NHTSA's FRE.

On May 22, 2007, the Alliance met with NHTSA to discuss the latter's concerns with the test force application duration (Docket No. NHTSA–2006–23882–0012). A presentation was given by General Motors (GM) to help explain how "creep" can occur with longer force application durations. The Alliance and GM believed that the creep (yielding) that occurs while maintaining the load could be used to predict the amount of creep (yielding) that will occur while applying the force loads for longer force applications. GM claimed that the increase in deformation that occurs for longer force application durations could be the difference between passing or failing the test. GM also claimed that a load duration of 30 seconds is justified because in tests conducted by Transport Canada and NHTSA's Vehicle Research & Test Center (VRTC), the peak loads, or the required load limit of 18,000 N (9,000 N of each loading device), could be achieved within this time period.

The Alliance further stated that requiring a load application time of at least 4.5 minutes diverges from the GTR requirement and the GTR's developmental testing. The GTR specifies a load rate between 20 to 90 mm/min. The Alliance stated that manufacturers will likely specify maximum allowable speed, and that full load will be reached in considerably less than 4.5 minutes. Thus, the Alliance claims that the differences in load duration now make it possible for a vehicle certified to the GTR in other countries to not comply in the United States.

Agency Response

We are denying the request to shorten the time duration to 30 seconds. A 30-second load rate would unreasonably diminish the stringency of the sliding door load test. However, after considering the Alliance's petition, the agency has decided that the load application rate up to 2,000 N/min resulted in an unnecessarily long duration for the test. Rather than specifying a force application rate (apply the force at any rate not to exceed 2,000 N/min until a force of 9,000 N is achieved on each force application device), to simplify the test procedure we are amending S5.2.2.4(a) to specify that the 9,000 N force is achieved in not less than 90 seconds and not more than 120 seconds. The 90 to 120 second duration corresponds to loading rates of 4,500 N/min to 6,000 N/min, which according to data from the tests conducted at VRTC is comparable to the loading rates of 20 to 90 mm/min specified in the GTR.

The agency developed the test parameters for the sliding door test specified in the February 2007 final rule based on the results of eight tests conducted by Transport Canada and seven conducted by VRTC. Table 1 below, "Transport Canada and VRTC Sliding Door Evaluation Test Results," summarizes the results of Transport Canada's and VRTC's sliding door tests used to develop the February 2007 final rule. The table identifies the makes and models of the vehicles tested, the number of sliding door latches, the peak loads applied during the test, the approximate time (in seconds) to achieve either 8,900 N or the peak load, the approximate displacement rate (in mm/min) at the peak load, and the approximate loading rate (in N/min).

[2] Metals do not "creep" at room temperature. We assume "creep" describes a yielding or deformation of the material.

TABLE 1—TRANSPORT CANADA AND VRTC SLIDING DOOR EVALUATION TEST RESULTS

Model year	Make	Model	Number of latches	Peak loads (N)	Approx. duration to achieve 8,900 N or peak load (sec)*		Approx. displacement rate at peak load (mm/min)*		Approx. loading rate (N/min)*	
Transport Canada Test Results					(F)	(R)	(F)	(R)	(F)	(R)
1995	Dodge	Caravan	1	(F) 9526 (R) 10008	10	10	150	240	53400	53400
1998	Dodge	Caravan	1	(F) 7239 (R) 11142	13	40	2031	315	33411	16713
2000	Mazda	MPV	1	(F) 10895 (R) 10810	14	14	NA	NA	38143	38143
1999	Honda	Odyssey	1	(F) 6451 (R) 13334	7	13	NA	NA	55294	41077
1997	Chevy	Venture	2	(F) 11129 (R) 11155	12	12	0.59	350	44500	44500
2000	Pontiac	Transport	2	(F) 11148 (R) 11108	14	14	NA	NA	38143	38143
1998	Ford	Windstar	2	(F) 11119 (R) 11088	12	12	NA	NA	44500	44500
1999	Ford	Windstar	2	(F) 11144 (R) 11095	14	14	NA	NA	38143	38143
Averages					12	16	727	302	43129	39327
NHTSA (VRTC) Test Results					(F)	(R)	(F)	(R)	(F)	(R)
1993	Dodge	Caravan	1	(F) 9009 (R) 9018	38.5	38.9	225	315	14040	13909
2001	Dodge	Caravan	1	(F) 7162 (R) 8900	387	260	19.74	18.46	1110	2053
1992	Chevy	Lumina	1	(F) 6266 (R) 6266	21.4	21.4	196	393	17568	17568
2002	Honda	Odyssey (Drv. dr)	1	(F) 7875 (R) 8900	980	340	19.9	19.06	482	1571
2002	Honda	Odyssey (Pass dr.)	1	(F) 7749 (R) 8900	520	300	19.62	20	894	1780
2001	Ford	Windstar (Drv. dr)	2	(F) 8900 (R) 8900	150	340	20	19.4	3560	1571
2001	Ford	Windstar (Pass dr.)	2	(F) 8900 (R) 8900	120	320	22	18.8	4450	1685
Averages					317	231	75	115	6015	5734

* In the column, the first number represents readings for the front force application device (F) and the second represents the rear force application device (R).

Note that the force application rate for the sliding door test specified in the February 2007 final rule was determined using only the data from the VRTC tests. The average time to attain 8,900 N, or peak load, in the VRTC tests was 274 (= (317+231)/2) seconds. This corresponds to the approximate loading rate of 2,000 N/min specified in the final rule.[3]

In view of the petition for reconsideration, we have reexamined the VRTC test data to review the time durations for conducting the test. We have determined that the average force application rate in the sliding door test at VRTC presented in Table 1 was approximately 6,000 N/min ((6,015+5,734)/2 = 5,874 N/min). This corresponds approximately to an average displacement rate of 95 mm/min ((75+115)/2 = 95 mm/min) which is close to the upper limit of the displacement rate specified in the GTR (90 mm/min). Regarding the lower limit, of the VRTC tests in Table 1 that exhibited displacement rates of approximately 20 mm/min (corresponding to the lower limit of the displacement rate specified in the GTR), the highest corresponding force application rate was approximately 4,500 N/min. Force application rates between 4,500 to 6,000 N/min in the sliding door test correspond to test durations between 90 and 120 seconds. In short, when we calculated the time duration to achieve the test force of 9,000 N when applying the loads at 4,500 N/min and 6,000 N/min (the loading rates resulting in the displacements of 20 mm to 90 mm/min, respectively), we found durations of between 90 and 120 seconds. The 90 to 120 second duration better parallels the GTR requirements. Accordingly, we are modifying the load application rate for the sliding door system test procedure by specifying in S5.2.2.4(a) to increase the force, as linearly as possible, until a force of 9,000 N is achieved on each force application device in not less than 90 seconds and not more than 120 seconds.

We disagree with the petitioner's belief that, because Transport Canada had used the 10-second load application in developing data supporting the GTR, a 10-second load application should be used. The Transport Canada tests were only used to develop the initial procedural aspects of the sliding door tests. We excluded these test results in

[3] The NPRM and the GTR prescribed a load rate application of 20–90 mm/min until a force of 9,000 N is achieved on each of the loading devices, followed by a 10-second hold. In response to the NPRM, the Alliance commented that the test procedure should be controlled using a force application rate rather than a displacement rate, because controllers currently in use do not allow for simultaneous control of both displacement and load, and that the procedure as specified would raise practicability concerns. NHTSA agreed with the comment and adopted in the February 2007 final rule that the load be controlled at a rate not to exceed 2,000 N/min.

calculating the appropriate force application rates for the February 2007 final rule because the test setup was not identical to that specified in the February 2007 final rule. The Transport Canada tests were conducted with the load plates joined by a connecting bar that caused the result of one door edge to affect the other. In addition, the force application device in the Transport Canada tests lacked sufficient structural reinforcement to prevent displacements on the vehicle floor and off-axis loading that could cause the loads to be applied in directions other than transverse.

NHTSA is concerned that testing at exceptionally fast force application rates, such as a 30-second force application rate, will unacceptably reduce the stringency of the sliding door test. Table 1 shows that testing conducted on similar Dodge Caravans (with only one latch system and manufactured from 1992–1995) showed that one vehicle was able to achieve the required loads on both door edges during Transport Canada testing when tested within 10 seconds and at a rate of 53,400 N/min, while the other failed the load requirement when tested by VRTC within 40 seconds and at a rate of approximately 14,000 N/min.[4]

As for the Alliance's concern about the yielding of the metal it saw during the hold period in the Alliance developmental test, we were not persuaded that there was a problem with the test. Yielding in and of itself does not invalidate a test. The yielding could have resulted from a redistribution of loads in the door structure. The petitioner did not provide any specifics of the door used in this developmental sliding door test. We believe that the door was equipped with only a single latch system since the door deformations in this test were in excess of 100 mm, and that the yielding noted by the Alliance could have been avoided had the door been equipped with two latch systems. In any event, because the test duration has been amended by this final rule, the issue is moot.

With regard to the Alliance's concern that the FRE did not include vehicle structural changes, the Alliance comment was not supported by either analysis or data. Although the earlier model year vehicles tested at VRTC failed the sliding door test requirements, more recent model year vehicles, which had the addition of another door latching system, were able to meet the requirements. In addition, we are not aware of any vehicle requiring significant structural changes to meet the requirements of the sliding door test. Thus, we disagree with the Alliance's assertion that supporting the test loads over a period of time longer than the petitioner's suggested 30-second duration will require additional structure in the vehicle.

2. Test Force Application Load Plate Positioning

The February 2007 final rule specified that "the force application plate is positioned such that the long edge of the plate is as close to the interior edge of the door as possible, but not such that the forward edge of plate is more than 12.5 mm from the interior edge" (S5.2.2.3(f)(3), S5.2.2.3(g)(3), and S5.2.2.3(h)(3)).

The Alliance petitioned NHTSA to slightly revise the wording of the provision because it believes that NHTSA intended to apply this requirement to both the forward edge of the forward plate as well as the rearward edge of the rear plate. Accordingly, the Alliance recommended NHTSA revise the above-mentioned sections to read: "The force application plate is positioned such that the long edge of the plate is as close to the interior edge of the door as possible, but not such that the forward edge of forward plate and the rear edge of the rear plate are more than 12.5 mm from the respective interior edges."

Agency Response

We are granting this request. The Alliance's suggested wording more accurately reflects the intent of the requirement; the suggested wording is clearer that the specification applies to the positioning of both plates. Therefore, we are modifying the specifications for load plate positioning for the sliding door system force application test specified in sections S5.2.2.3(f)(3), S5.2.2.3(g)(3), and S5.2.2.3(h)(3), as suggested by the Alliance.

3. Test Force Application Load Plate Rotation

The February 2007 final rule specified that the force application plates used for applying the force in the sliding door test may "allow for longitudinal rotation with respect to the vehicle's centerline axis" (S5.2.2.3(f)(1)(ii), S5.2.2.3(g)(1)(ii) and S5.2.2.3(h)(1)(ii)). In its petition for reconsideration, the Alliance stated that the final rule's description of the force application plate rotation is unclear. The Alliance petitioned NHTSA to amend S5.2.2.3(f)(1)(ii), S5.2.2.3(g)(1)(ii), and S5.2.2.3(h)(1)(ii) to read as follows:

> The plates are fixed perpendicular to the force application devices and move in the transverse direction. For alignment purposes, each plate is attached to the application device in a manner that allows for rotation about the vehicle's y-axis. In this manner, the face of each plate remains parallel to the vertical plane which passes through the vehicle's longitudinal centerline.

Agency Response

We are granting this request. The Alliance's suggested clarification better defines the allowable rotation for the test plates. The specification as written in the February 2007 final rule does not clearly distinguish which vehicle centerline is being referenced. Therefore, we are modifying the specifications for permissible load plate rotation for the sliding door system force application test in sections S5.2.2.3(f)(1)(ii), S5.2.2.3(g)(1)(ii), and S5.2.2.3(h)(1)(ii), as the petitioner suggested.

4. Closure Warning Devices

In the February 2007 final rule, NHTSA required sliding doors to have either: (1) a primary door latch system that meets the same requirements as primary door latch systems on hinged side doors (i.e., has both a fully and secondary latched position); or (2) a system with a fully latched position and a door closure warning system to alert the driver when the door is not in the fully latched position.[5] NHTSA explained that FMVSS No. 206 did not previously require either a primary or a secondary latch system for sliding doors; the fully latched position and the associated loading requirements were newly required by the final rule.

The final rule explained that these options for backup protection for sliding door latches have been permitted in the Economic Commission of Europe (ECE) regulations for decades. Further, during the discussions of the GTR, the European governments said there were no data showing better ejection prevention with either of the options. Since NHTSA did not have any data showing a problem with either approach and no commenter provided data showing a problem, NHTSA adopted the

[4] The Alliance points out in its petition that tests conducted by Transport Canada and by VRTC on the Dodge Caravan and Chevy Lumina were performed within 30 seconds or less. However, these tests were not used for determining the application rate adopted in the final rule since door separation exceeded the limit before a force of 9,000 N was achieved on each force application device.

[5] Under the first option, the secondary latched position is subject to loads 50% or less of what the fully latched position must meet. The second option contemplates that the driver will close the sliding door so that it is fully latched, thus providing occupants the protection associated with the fully latched loading requirements.

options in the upgraded FMVSS No. 206.

In its petition for reconsideration of the February 2007 final rule, Advocates objected to the option that allows sliding door latches to be equipped with only a primary latching position if a door closure warning system is present. The petitioner had similarly objected to the option in its comments to the NPRM. In its petition, Advocates requested NHTSA to require that all sliding door latches be equipped with both primary and secondary latching positions.

The petitioner believed that the arguments presented by NHTSA in the February 2007 final rule did not sufficiently support NHTSA's decision to oppose Advocates' comment seeking a mandatory secondary latching position on sliding door latches. Advocates stated that lack of clear data was insufficient for denying its request, since door closure warning systems do not ensure the same degree of fail-safe redundancy as would a mechanical secondary latching system. The petitioner argued that "common sense" supports the view that not all drivers will notice or react appropriately to a warning that the primary latching system is not functioning properly.

The petitioner also believed that NHTSA's not requiring a secondary latching position is contradictory to the agency's decision in the final rule with regard to hinged side door locks and was thus "arbitrary and capricious." For hinged side door locks, we require two separate actions to unlatch and then unlock a door from the inside of the vehicle, in part to prevent children from easily opening a door while the vehicle is in motion. Advocates stated that "[e]ven though the agency admitted [in the hinged side door lock situation] that there are no definitive data on the use of child door safety locks, the agency decided that reliance on human behavior would pose a risk to the safety of children." The petitioner believed that the two situations address nearly identical issues of vehicle safety and should be addressed by NHTSA consistently, by requiring a mechanical secondary latching system for side sliding doors.[6]

Agency Response

We are denying Advocates' request to require that all sliding door latches be equipped with both primary and secondary latching positions. We reiterate our determination in the final rule that the lack of data showing the superiority of one system over the other is noteworthy and important, when the one system at issue[7] has been in existence for decades in Europe. This is not a situation where we are deliberating whether to permit a system that has been unproven in the real world. The European governments have permitted the system for decades, and available data from Europe do not show better ejection prevention with either of the options. Data also do not show a problem with the systems. Based on the best available information, NHTSA has determined that the systems performed equally. With performance being equal, the agency has concluded that both systems should be permitted. Today's final rule confirms that determination.

This is also not a situation where we relaxed an existing requirement but failed to analyze the basis for changing our previous decisions underlying the requirement. Currently, the only requirement applicable to sliding side doors in FMVSS No. 206 is that the entire door, track and slide entire system must not separate when a total transverse load of 18,000 N is applied. There are no requirements for the individual latch components for sliding doors. The February 2007 final rule newly required the doors to have a backup system for supplemental protection. As to the requirements that should apply to the backup, as explained above, information available to NHTSA from Europe indicates that having either a secondary latched position or a door closure warning system was equivalent. Accordingly, the decision was made to permit either system.

We do not believe we were arbitrary and capricious in not requiring a secondary latching position. The decision not to require a mechanical secondary latching system for side sliding doors was based on different considerations than the decision to require an action distinct from activation of the door handle to open a door. In the latter situation, NHTSA rejected the Alliance request to permit a door to be unlocked and unlatched with a single pull of the handle when the door is equipped with a child safety lock. The Alliance request pertained to the primary locking mechanism, not to a backup system. There was no alarm or warning provided to the driver informing him or her that the child lock was not engaged. If two distinct actions were not provided to open a rear door, a child could open the door and tumble out by a single pull of the door handle. The safety of the primary system would be too easily overridden by allowing a door to open by a single pull of a handle. Stated differently, the safety of the primary system could be too easily thwarted by human inattention. Further, the requirement for a distinct action to unlock and to open the door has been in FMVSS No. 206 since 1968, and the agency was not convinced there was reason to lessen the requirement.

In contrast, Advocates' request related to a supplemental backup system that has never before been required by the standard. Based on available information, NHTSA selected appropriate requirements for the backup system. Similar to its decision on the child lock issue, the agency did not adopt any requirement for the backup system that would lessen the performance of the primary latching system. We did not allow the backup system to make it easier for a properly latched sliding door to be inadvertently opened. In this regard, the agency's decisions regarding the requirements for the side sliding doors and for the child safety locks are reasonable and consistent. For the reasons stated above, NHTSA denies Advocates' petition to require all sliding door latches to have both primary and secondary latching positions.[8]

[6] The petitioner also believed that the difference in outcomes between the two situations can be explained by NHTSA's participation in the GTR process. "Having forged its position in the international setting, the agency is reluctant to reverse its views it previously espoused in the domestic rulemaking proceeding. This specific instance illustrates the disadvantage at which participants in the domestic APA [Administrative Procedure Act] rulemaking process are placed when that proceeding is superceded [sic] by the prior global rulemaking process under the 1998 Global Agreement." March 23, 2007 petition, page 10. NHTSA seeks to reassure that the GTR process does not detract from or contravene agency rulemaking under the APA and the National Traffic and Motor Vehicle Safety Act (49 U.S.C. 30101 *et seq.*). The discussion in this section responds to the petitioner's specific concerns about the door closing system for side sliding doors and explains why we disagree that a mechanical secondary latching system should be required. In a separate section of this preamble, we respond to the petitioner's overall objections to the GTR process.

[7] A system with a fully latched position and a door closure warning system.

[8] Advocates also believed that a response by the agency to its comment on the NPRM opposing the second option was "inapposite" to the comment. The agency had stated in the final rule: "We believe these new requirements achieve Advocates' suggestion that a mechanical solution is more dependable than one that requires some human behavior." 72 FR at 5391. In its petition, Advocates stated that its NPRM comments had advocated the need to have a mechanical secondary latching system, and that the primary system is mechanical has no relevance to the issue of what means are used to provide the backup system.

A clarification of NHTSA's statement in the final rule would be helpful. The agency was explaining that the February 2007 final rule upgraded the current FMVSS No. 206 such that, among other matters, a latch will have to be provided that has a fully latched position that meets more stringent

Continued

b. Exclusion of Wheelchair Lift Doors

The February 2007 final rule removed a provision that had been in the standard since 1985, which excluded from the standard doors equipped with wheelchair lifts.[9] The doors have been excluded because the agency determined, in response to a petition for rulemaking submitted in the early 1980's from Thomas Built Buses, that a wheelchair lift platform acted as a barricade in the doorway when it was stored. When stored, the platform retracted to a vertical orientation parallel to and in close proximity with the interior surface of the lift door, and covered the complete opening. The 2007 final rule stated that "wheelchair lift designs have evolved such that they no longer provide adequate protection for vehicle occupants as contemplated when the exclusion was adopted," according to a 1998 evaluation. 72 FR at 5396. The agency believed that current lift system have platforms not covering or only partially covering the vehicle doorway, e.g., some have platforms that are stored horizontally above the vehicle floor. *Id.* NHTSA further noted that current wheelchair lift designs can be installed without modifying an OEM door system, so that "installation of a wheelchair platform lift does not necessitate removal of a vehicle door from compliance with FMVSS No. 206." *Id.*

In response to the February 2007 final rule, Thomas Built Buses petitioned NHTSA to reinstate the exclusion. The petitioner stated that it uses single panel lift doors that provide a barrier to ejection. It requested excluding a door that "has a wheelchair lift that sets in the wheelchair lift door opening when retracted adequately providing a barrier to bus occupants from being ejected."

Agency Response

We are granting this request. The agency was not aware that lift platforms continued to be manufactured that completely cover the door opening when retracted and act to barricade the doorway. While the former exclusion of all doors equipped with a wheelchair lift was too broad given that some lifts made today do not completely block the door when retracted, the agency sees no reason to subject to FMVSS No. 206 doors with lifts that do block the doorway, as reasoned in the 1985 rulemaking. The agency is amending the February 2009 final rule to exclude doors equipped with a permanently attached wheelchair lift system meeting the following criteria: (a) When the lift is in the retracted position, the lift platform retracts to a vertical orientation parallel to and in close proximity with the interior surface of the lift door; (b) in that position, the platform completely covers the doorway opening and provides a barricade to the doorway; and, (c) the wheelchair lift door is linked to an alarm system consisting of either a flashing visible signal located in the driver's compartment or an alarm audible to the driver that is activated when the door is not fully closed and the vehicle ignition is activated.

IV. Other Issues

a. Correction of S5.1.1.4(b)(2)

In its petition for reconsideration of the February 2007 final rule, the Alliance suggested that the words "if provided" should be included in S5.1.1.4(b)(2) (one of the provisions specifying the test procedure for a hinged door test). The petitioner correctly noted that there is a corresponding section, S5.1.1.4(b)(1)(i)(C), which includes that phrase. We agree to include the phrase, "if provided," in S5.1.1.4(b)(2). The phrase is appropriate for both sections, and the amendment makes the procedures consistent. Also, for additional consistency, we will clarify in this section that doors "may" be tethered to avoid damaging recording equipment.

b. Technical Amendment to Figure 7

Prior to the February 2007 final rule, FMVSS No. 206 did not have a figure that graphically displayed the vehicle coordinate reference system to be used for inertial testing. The GTR provided such a figure because part of the GTR referenced various directions with respect to different vehicle axes. The NPRM proposed, and the February 2007 final rule adopted, this same GTR figure as Figure 7.

Although the agency did not receive any comment regarding Figure 7 in response to both the NPRM and the February 2007 final rule, after publication of the final rule NHTSA realized that x-axis and the z-axis in Figure 7 were not consistent with SAE J211 (Instrumentation for Impact Test) or with the sign conventions used in other Federal motor vehicle safety standards such as FMVSS No. 208 and FMVSS No. 214. Therefore, NHTSA is making a technical amendment to FMVSS No. 206 by modifying Figure 7 to be consistent with SAE J211 and the sign convention for other Federal motor vehicle safety standards as follows:

loading requirements than now required. To comply with the final rule's sliding door requirements and test procedure, we believe that manufacturers may have to install two latching systems—on the front and rear edges of the door—rather than only one latching system in only one location. The "mechanical solution" to which the agency referred was to the two-latch system, or an otherwise mechanically enhanced latch system, that would have to be installed to meet the upgraded strength requirements. Further, the agency was acknowledging the final rule's adoption into FMVSS No. 206 a requirement that did not exist before in the standard. That requirement for a backup system (either having a secondary latching position for each of the two sliding door latches or having the vehicle have an alert that the latches are not in the fully latched position) was seen by the agency to further supplement safety by providing a vehicle-based attribute that addressed partial latching of the door.

[9] The door must also be linked to an alarm system consisting of either a flashing visible signal located in the driver's compartment or an alarm audible to the driver that is activated when the door is open. See S4(c) of FMVSS No. 206.

FIGURE 7 - VEHICLE COORDINATE REFERENCE SYSTEM FOR INERTIAL TESTING

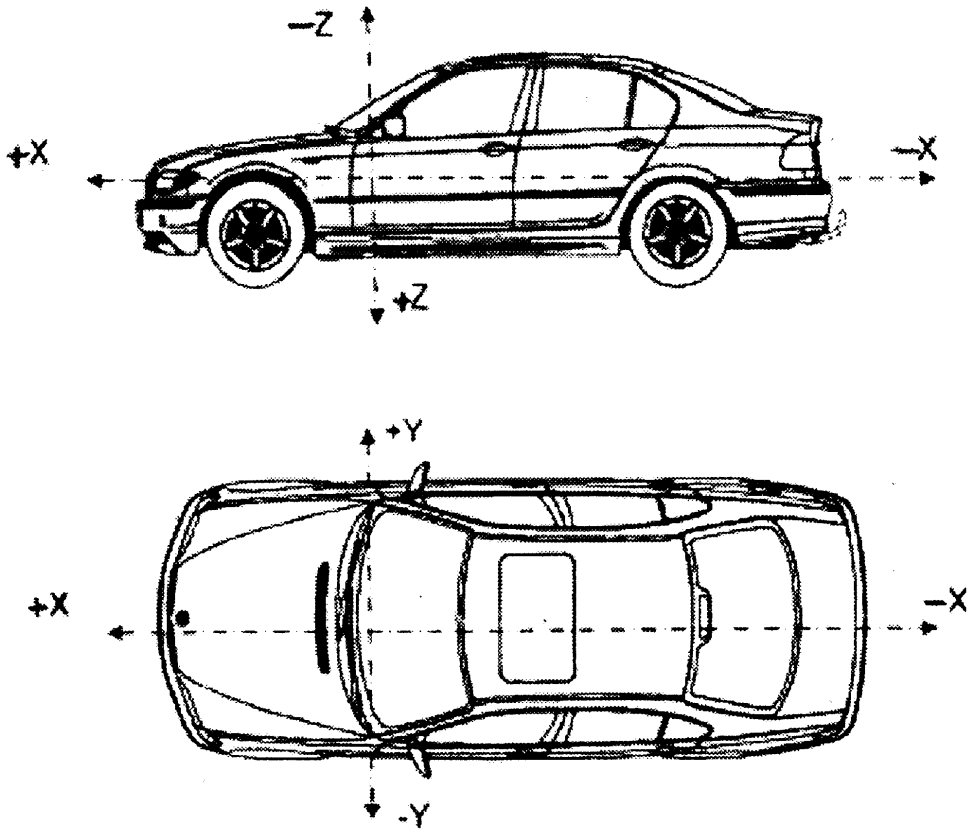

X = longitudinal direction
Y = transverse direction
Z = vertical direction

c. Distinguishing Between Primary and Auxiliary Door Latches

The February 2007 final rule mandated that each hinged door system be equipped with at least one "primary door latch system" (S4.1.1). "Primary door latch system" was defined as consisting of a "primary door latch(s) and a striker(s)." A "primary door latch" was defined as "a latch equipped with both a fully latched position and a secondary latched position and is designated as a 'primary door latch' by the manufacturer." The reason for the phrase "and is designated as a 'primary door latch' by the manufacturer" was to deal with a potential problem for NHTSA in identifying, for compliance testing purposes, the "primary latch" of a door or door system if the door or door system is also equipped with an auxiliary latch that has a secondary latch position.[10] If both the primary door latch and the auxiliary latch have a secondary latched position, it is not obvious which latch is the primary latch.

TriMark requested that NHTSA not have "a physical identification of the primary and auxiliary latch because of the cost involved and ability to use a similar/identical latch in both primary and auxiliary applications." TriMark asked how the agency envisioned that this requirement for latch designation be addressed from a practical matter.

Agency Response

The final rule required the vehicle manufacturer to designate one of the latches as the primary latch in connection with the manufacturer's certification of compliance, and to identify the primary door latch when asked to do so by the agency.[11] We did not intend, and the final rule did not require, that the primary door latch be physically marked differently on the vehicle than the auxiliary door latch. Door latch suppliers may provide the same latch for both primary and auxiliary applications, if the performance requirements are satisfied. NHTSA continues to believe the approach used in the February 2007 final rule will not be unduly burdensome to latch suppliers. Vehicle manufacturers simply must identify the primary door latch at the time of certification of the vehicle. In practice, prior to conducting a compliance test on

[10] "Auxiliary door latch" was defined as a latch equipped with a fully latched position, with or without a secondary latched position, and fitted to a door or door system equipped with a primary door latch system.

[11] Such a request would be made in connection with an agency inquiry regarding compliance with the standard.

a vehicle, NHTSA will ask the manufacturer which is the primary door latch for that vehicle and will test the vehicle in accordance with the manufacturer's response.

d. Certification Information

The February 2007 final rule specifies that each primary and auxiliary door latch system shall meet either dynamic requirements or a calculation of inertial load resistance developed to ensure that the door latch system will remain latched when properly assembled in the vehicle door (S4.1.1.4). TriMark asked if a computer simulation could be used as a method of evaluation for the inertial analysis.

Agency Response

NHTSA does not prohibit a manufacturer from certifying its vehicle based on a method that is different than that specified in the FMVSS. As explained in the final rule, FMVSS test procedures specify the procedures that will be used by the agency to determine if a motor vehicle complies with the applicable requirements. A manufacturer is not required to use the procedures to certify its vehicle. However, NHTSA may ask the vehicle manufacturer for the basis for its certification. In the event of a noncompliance with an FMVSS, a manufacturer may defend itself against civil penalties for violating the National Traffic and Motor Vehicle Safety Act if it could show that it exercised due care in making its certification. Whether a manufacturer exercised due care in basing a certification on a computer simulation depends on the particularities of the case, including the characteristics of the computer simulation, and is determined in the context of a particular compliance proceeding.

e. Applicability of the Standard to Vehicles Over 10,000 lb GVWR

The February 2007 final rule applies to passenger cars, multipurpose passenger vehicles, and trucks. It also applies to buses with a gross vehicle weight rating (GVWR) of 4,536 kg (10,000 lbs) or less. In response to the final rule, Trimark asked NHTSA to comment on the applicability of this standard to motor homes, fire trucks, ambulances, and Class 7/8 heavy trucks in excess of a GVWR of 4,536 kg (10,000 lbs).

Agency Response

With regard to applicability, note 49 CFR 571.3, which provides specific definitions for the vehicle types of concern in the Trimark comment. Specifically, a *motor home* is defined as "a multi-purpose vehicle with motive power that is designed to provide temporary residential accommodations, as evidenced by the presence of at least four of the following facilities: Cooking; refrigeration or ice box; self-contained toilet; heating and/or air conditioning; a potable water supply system including a faucet and a sink; and a separate 110–125 volt electrical power supply and/or propane." Paragraph S2 of the February 2007 final rule states applicability to multipurpose passenger vehicles; [12] therefore, the 2007 final rule applies to motor homes.

NHTSA considers fire trucks to be a type of *truck,* which is defined in 49 CFR 571.3 as "a motor vehicle with motive power, except a trailer, designed primarily for the transportation of property or special purpose equipment." Since paragraph S2 of the February 2007 final rule states its applicability to trucks, the final rule applies to fire trucks.

Ambulances are typically *multipurpose passenger vehicles* (MPVs) for purposes of the FMVSSs, and thus must meet the standards for MPVs (including FMVSS No. 206). In addition, ambulances are also subject to regulation through separate standards administered by the General Services Administration (GSA) in the *Federal Specifications for the Star-of-Life Ambulance.*[13] Section 3.10.9 of the GSA standard states, "Door latches, hinges, and hardware furnished by original equipment manufacturers and final stage ambulance manufacturers shall comply with FMVSS 206."

Regarding Class 7/8 heavy trucks, these vehicles fall under the definition of *truck* as defined in 49 CFR 571.3. FMVSS No. 206 applied to trucks, regardless of their GVWR, prior to the February 2007 final rule, as does the amended FMVSS No. 206. S2 of amended FMVSS No. 206 states that the standard applies to "passenger cars, multipurpose passenger vehicles, *and* trucks, *and* buses with a gross vehicle weight rating (GVWR) of 4,536 kg or less" (emphasis added). In other words, the February 2007 final rule applies to all passenger cars, multipurpose passenger vehicles, and trucks, regardless of their GVWR, and is also applicable to buses with a GVWR of 4,536 kg (10,000 lb) or less.[14]

V. GTR Process

The February 2007 final rule responded to a comment from Advocates that had expressed concern about the opportunity for consumer organizations to be involved in the GTR process, and about what Advocates had said was an "after-the-fact" presentation of a draft GTR which, the commenter believed, threatened to abridge the agency's authority. In responding to the comment, the final rule sought to address what appeared to be Advocates' fundamental misunderstanding of the GTR process. NHTSA clarified in the final rule that consumer groups have an opportunity to be involved in all aspects of the GTR process, and explained how the process is transparent and inviting of public participation in the formation of draft proposals. 72 FR at 5388. The final rule explained how information regarding the meetings and negotiations was made publicly available through **Federal Register** notices, and that meeting agendas, presentations, reports and test results were made available to the public on the UNECE Web site after each international meeting. The final rule pointed out that public comment on the GTR discussions were requested multiple times, and that domestic consumer organizations were able to participate in the GTR negotiations as a part of Consumer International. Importantly, the final rule explained that under the GTR process, countries voting "yes" on a GTR have only agreed to begin their processes for adopting the provisions of the GTR, i.e., to issue an NPRM or Advance NPRM. The GTR process leaves the ultimate decision to each country of whether to adopt the GTR into their domestic law. That is, the process leaves it up to NHTSA to decide whether to issue a final rule adopting the proposed requirements into the FMVSS, after receiving and considering comments on the NPRM.

In its petition for reconsideration, Advocates repeated many of the concerns it had expressed in its comment on the NPRM. The petitioner again described its belief that the procedure under which the final rule was developed was flawed. The petitioner believed that the final rule was negotiated in proceedings with foreign stakeholders since, Advocates stated, only international organizations having standing to participate at UNECE

[12] "*Multipurpose passenger vehicle*" means a motor vehicle with motive power, except a low-speed vehicle or trailer, designed to carry 10 persons or less which is constructed either on a truck chassis or with special features for occasional off-road operation." 49 CFR 571.3.

[13] *See* KKK-A-1822F (Aug. 1, 2007), *available at http://www.deltaveh.com/KKK-A-1822F.htm.* This standard was created by the U.S. General Services Administration as a guideline for the proper construction of an ambulance.

[14] The preamble of the final rule explained that it "extends the application of FMVSS No. 206 to buses with a gross vehicle weight rating (GVWR) of 4,536 kg (10,000 pounds) or less, including 12–15 passenger vans." 72 FR 5385, 5386.

sponsored Working Party on Passive Safety committee meetings are allowed to "influence" the GTR negotiations. (Advocates stated that U.S. consumer groups were unable to participate in the GTR negotiations as a part of Consumer International, a group with standing, because of cost and location constraints.)

The petitioner also believed that by participating in the GTR process and adopting the GTR, NHTSA subverted the rulemaking procedures required by the Administrative Procedure Act (APA) (5 U.S.C. 553). Advocates stated that the purpose of the APA notice and comment rulemaking requirement is to ensure that the U.S. public is able to comment on the rule while it is still in the formative or proposed stage. The petitioner believed that, because the U.S. will have already voted for the GTR when NHTSA presents it as a proposed rule, the APA proceeding is tainted because the agency has put its credibility on the line in adopting the GTR. Advocates contended that as a result of this, the agency's commitment to the international process and the GTR/proposed rule makes the agency more resistant to adopting changes and alternatives and prejudices Advocates' participation in the rulemaking proceeding.

Agency Response

We appreciate this opportunity to explain again the GTR process and to address the petitioner's reservations about the process. The GTR process under the UN/ECE 1998 Agreement on Global Technical Regulations provides opportunities for NHTSA to enhance vehicle safety and improve government efficiency. It assists us in adopting best safety practices from around the world, identifying and reducing unwarranted regulatory requirements, and leveraging scarce government resources for research and regulation. The process facilitates our effort to continuously improve and seek high levels of safety, particularly by helping us develop regulations that reflect a global consideration of current and anticipated technology and safety problems.[15]

The final rule described in detail the benefits that the GTR process afforded the American public in the development of the upgraded FMVSS No. 206. 72 FR 5388, col. 3. It also explained the high degree to which public participation was pursued and encouraged by NHTSA in developing the NPRM and final rule.[16] Advocates is concerned about its inability to be directly involved at international meetings. Attendance at the meetings by non-governmental parties is not crucial to the process. Alternative opportunities are provided for participation, such as by commenting to agency notices of WP.29 programs of work.[17] Moreover, the point at which public participation is crucial, and where Advocates is wholly able to participate, is subsequent and in response to publication of NHTSA's NPRM. The GTR process recognizes and embraces that participation and fully accords with the requirements of the APA.

Under the APA, an administrative agency must issue a notice of the intention to adopt rules, which must contain either the terms or substance of the proposed rule or a description of the subjects and issues involved. *See* 5 U.S.C. 553. The APA requires that an agency must issue an NPRM that must be published in the **Federal Register,** unless persons subject thereto are named and either personally served or otherwise have actual notice thereof in accordance with law. *Id.* at § 553(b). Notice under § 553(b) is sufficient if it affords interested parties a reasonable and meaningful opportunity to participate in the rulemaking process by providing a description of the subjects and issues involved.[18] Under the APA, following publication of an NPRM a Federal agency must give interested persons an opportunity to participate in the rulemaking through submission of written data, views, or arguments. *Id.* at § 553(c). There is no requirement in the APA for public participation in formation of the NPRM.[19]

The GTR process and NHTSA's policy implementing the process[20] were developed with these APA requirements for notice and opportunity to comment foremost in mind. Following a vote by the U.S. for establishment of a GTR, our procedure entails publishing an NPRM requesting public comment on adopting the regulation as a U.S. standard. Any decision by us as to the next agency action with regard to the NPRM (whether to issue a final rule adopting the regulation, a supplemental NPRM, or a notice terminating the rulemaking action) is made in accordance with applicable U.S. law, after careful consideration and analysis of public comments.[21] With regard to the rulemaking at issue, NHTSA met the APA with the NPRM (December 15, 2004) and the subsequent final rule (February 7, 2007). We thoroughly analyzed and considered Advocates' comments to the NPRM (*see* 72 FR 5385, 5388–5391). Our disagreement with the petitioner's comments was based upon our analysis of the issues presented and our conclusion that the views expressed by the commenter were unpersuasive.

Advocates believes that NHTSA failed to accept its suggestions because NHTSA would lose face in the international community. This is an erroneous and unfortunate view of the agency and the GTR process. When the agency meets with international parties to consider current and anticipated technology and safety problems, NHTSA is seeking to learn from the expertise and experience of governmental bodies and consumer and industry groups worldwide at a preliminary stage in the rulemaking. The agency determines in that dialogue the best practices of other countries or regions, and whether there is a bases and rationale for those practices. When the agency votes for establishment of the GTR, the agency is acknowledging that it has made an initial determination that there appears to be a technical basis for the regulation and that the motor vehicle problem the agency seeks to address in the U.S. could possibly be addressed by the GTR. A similar kind of determination is made when we decide,

[15] See, 49 CFR Part 553, Appendix C, "Statement of Policy: Implementation of the United Nations/Economic Commission for Europe (UN/ECE) 1998 Agreement on Global Technical Regulations—Agency Policy Goals and Public Participation."

[16] *Id.,* col. 2.

[17] Advocates did participate in the GTR process via the opportunity to submit comments to several notices published by NHTSA concerning the GTR process. Advocates did in fact take advantage of this opportunity by submitting comments in response to a 2003 notice NHTSA issued regarding activities under the UNECE 1998 Agreement. *See* Docket No. NHTSA–2003–14395–0005 (March 5, 2003) (submitted in response to Notice of activities under the 1998 Global Agreement and request for comments, 68 FR 5333, February 3, 2003). Advocates also submitted comments to other notices announcing information on other international negotiations. *See* Docket No. NHTSA–2000–7638–0014 (Sept. 11, 2000) (submitted in response to NHTSA's Recommendations for Global Technical Regulations Under the UNECE 1998 Global Agreement, 65 FR 44565, July 18, 2000).

[18] The APA further requires that the NPRM must also include (1) a statement of the time, place, and nature of public rulemaking proceedings; (2) reference to the legal authority under which the rule is proposed; and (3) either the terms or substance of the proposed rule or a description of the subjects and issues involved. *Id.*

[19] Advocates cites to the Negotiated Rulemaking Procedure provisions, 5 U.S.C. 561–570a, as authority that those prescribed procedures are the only permissible method by which agencies can consult with outside parties in establishing the content of proposed rules. In fact, the stated purpose of the Negotiated Rulemaking Procedure subchapter is "to encourage the agencies to use the process when it enhances the informal rulemaking process." 5 U.S.C. 561. Significantly, "[n]othing in this subchapter should be construed as an attempt to limit innovation and experimentation with the negotiated rulemaking process or with other innovative rulemaking procedures otherwise authorized by law." *Id.*

[20] 49 CFR Part 553, Appendix C.

[21] *Id.*

in our non-GTR rulemakings, to go forward and publish a proposal or advance notice of proposed rulemaking in the **Federal Register**. We fully acknowledge and hold in high consideration that "the decision to issue a final rule will be made in accordance with the U.S. law and only after careful consideration and analysis of public comments." 49 CFR Part 553, Subpart C. NHTSA values and learns from public comment on its NPRMs and shapes its decisions on rulemaking proposals based on those comments.[22]

The APA does not prohibit Federal agencies from developing proposals or having dialogues with any particular group (including international communities) prior to the issuance of a notice of proposed rulemaking. To the extent the petitioner asks us to refrain from such dialogue, we do not believe that public policy would be served by limiting the GTR's pre-proposal proceedings. The GTR provides a forum to share information and resources that could facilitate the development of a possible rulemaking initiative that might address a motor vehicle safety problem in the U.S. The process advances our research and rulemaking efforts and enables us to better leverage scarce agency resources through partnering with other countries. It provides us an opportunity and means to better manage our resources and address more motor vehicle safety harm, and more rapidly, than would be possible by NHTSA acting alone.

Advocates correctly states that the legal standard for sufficiency of APA notice is that "parties be able to comment on the rule while it is still in the formative or 'proposed' stage." *See, National Tour Brokers Ass'n* v. *US,* 591 F.2d 896, 902 (D.C. Cir. 1978). Yet, the petitioner does not believe that NHTSA can maintain a flexible and open-minded attitude towards an NPRM developed in the GTR process. We strongly disagree, and note that Advocates has made no showing that the agency has been closed-minded to the comments other than to assert that as the cause underlying the agency's decision not to concur with its suggestions. The NPRM laid out in detail reasons in support of each GTR provision, and NHTSA thoroughly considered and addressed all comments in the final rule. Also, as mentioned previously, the final rule (and today's document) changed some provisions of the GTR, which demonstrates the agency's flexibility in reconsidering tentative decisions made in the NPRM stage. To the extent that NHTSA did not adopt provisions that Advocates supported or suggested, that is a reflection of the agency's determination that those provisions were not the best way to proceed.

Comments were requested on the NPRM when the rule was still in the proposed stage. When NHTSA issues an NPRM, including those formed in the GTR process, the agency is seeking to enhance its knowledge of the subject matter. We know there may be issues bearing on the substance of the rulemaking that the agency has not fully understood or perhaps whose significance the agency may not have even recognized. We seek to be as informed as possible, so as to make the best decisions possible armed with all available information. NHTSA's implementation of the GTR process recognizes the crucial role of public participation in the development of regulations. At the same time, however, the GTR process enhances NHTSA's knowledge about safety problems and possible solutions by facilitating the interaction of the agency with safety specialists from around the world at the pre-NPRM stage. This knowledge improves our efficiency and enhances the quality of the FMVSS that may be ultimately proposed. For the aforementioned reasons, we are denying Advocates' request to reconsider the final rule based upon its view that the GTR process is flawed or that NHTSA violated APA rulemaking procedures.

VI. Rulemaking Analyses and Notices

Executive Order 12866 and DOT Regulatory Policies and Procedures

This rulemaking document was not reviewed by the Office of Management and Budget under E.O. 12866. It is not considered to be significant under E.O. 12866 or the Department's Regulatory Policies and Procedures (44 FR 11034; February 26, 1979). Although the February 6, 2007 final rule was significant due to public interest in the issues, today's document makes minor amendments to the regulatory text of that final rule. The minimal impacts of today's amendment do not warrant preparation of a regulatory evaluation.

Executive Order 13132 (Federalism)

NHTSA has examined today's final rule pursuant to Executive Order 13132 (64 FR 43255, August 10, 1999) and concluded that no additional consultation with States, local governments or their representatives is mandated beyond the rulemaking process. The agency has concluded that the rule does not have federalism implications because the rule does not have "substantial direct effects on the States, on the relationship between the national government and the States, or on the distribution of power and responsibilities among the various levels of government."

Further, no consultation is needed to discuss the issue of preemption in connection with today's rule. The issue of preemption can arise in connection with NHTSA rules in at least two ways. First, the National Traffic and Motor Vehicle Safety Act contains an express preemptive provision: "When a motor vehicle safety standard is in effect under this chapter, a State or a political subdivision of a State may prescribe or continue in effect a standard applicable to the same aspect of performance of a motor vehicle or motor vehicle equipment only if the standard is identical to the standard prescribed under this chapter." 49 U.S.C. 30103(b)(1). It is this statutory command that preempts State law, not today's rulemaking, so consultation would be unnecessary.

Second, the Supreme Court has recognized the possibility of implied preemption: in some instances, State requirements imposed on motor vehicle manufacturers, including sanctions imposed by State tort law, can stand as an obstacle to the accomplishment and execution of a NHTSA safety standard. When such a conflict is discerned, the Supremacy Clause of the Constitution makes the State requirements unenforceable. *See Geier* v. *American Honda Motor Co.,* 529 U.S. 861 (2000). However, NHTSA has considered the nature and purpose of today's final rule and does not currently foresee any potential State requirements that might conflict with it. Without any conflict, there could not be any implied preemption.

Executive Order 13045

E.O. 13045 (62 FR 19885, April 23, 1997) applies to any rulemaking that: (1) is determined to be "economically significant" as defined under E.O. 12866, and (2) concerns an environmental, health or safety risk that NHTSA has reason to believe may have a disproportionate effect on children.

[22] To illustrate, in response to comments on the NPRM, NHTSA's February 2007 final rule changed some of the requirements that had been proposed. In accordance with Alliance's comments to the NPRM, the load application in the sliding door test that was specified in the NPRM in terms of the displacement rate of the load application device was modified in the final rule to be specified in terms of the rate of load application. Along those lines, today's final rule has also amended provisions of the GTR in response to petitions for reconsideration.

This rulemaking is not subject to the Executive Order because it is not economically significant as defined in E.O. 12866.

Executive Order 12988 (Civil Justice Reform)

With respect to the review of the promulgation of a new regulation, section 3(b) of Executive Order 12988, "Civil Justice Reform" (61 FR 4729, February 7, 1996) requires that Executive agencies make every reasonable effort to ensure that the regulation: (1) Clearly specifies the preemptive effect; (2) clearly specifies the effect on existing Federal law or regulation; (3) provides a clear legal standard for affected conduct, while promoting simplification and burden reduction; (4) clearly specifies the retroactive effect, if any; (5) adequately defines key terms; and (6) addresses other important issues affecting clarity and general draftsmanship under any guidelines issued by the Attorney General. This document is consistent with that requirement.

Pursuant to this Order, NHTSA notes as follows. The issue of preemption is discussed above in connection with E.O. 13132. NHTSA notes further that there is no requirement that individuals submit a petition for reconsideration or pursue other administrative proceeding before they may file suit in court.

Regulatory Flexibility Act

Pursuant to the Regulatory Flexibility Act (5 U.S.C. 601 *et seq.,* as amended by the Small Business Regulatory Enforcement Fairness Act (SBREFA) of 1996) whenever an agency is required to publish a notice of rulemaking for any proposed or final rule, it must prepare and make available for public comment a regulatory flexibility analysis that describes the effect of the rule on small entities (*i.e.,* small businesses, small organizations, and small governmental jurisdictions). However, no regulatory flexibility analysis is required if the head of an agency certifies the rule would not have a significant economic impact on a substantial number of small entities. SBREFA amended the Regulatory Flexibility Act to require Federal agencies to provide a statement of the factual basis for certifying that a rule would not have a significant economic impact on a substantial number of small entities.

I certify that this final rule does not have a significant economic impact on a substantial number of small entities. This rule affects motor vehicle manufacturers, multistage manufacturers and alterers. To the extent some of these entities qualify as small businesses, they will not be significantly affected by this rulemaking. This final rule does not establish new requirements, but instead only adjusts some test procedures and makes minor technical amendments to the February 2007 final rule.

National Environmental Policy Act

We have analyzed this final rule for the purposes of the National Environmental Policy Act and determined that it does not have any significant impact on the quality of the human environment.

Paperwork Reduction Act

Under the Paperwork Reduction Act of 1995, a person is not required to respond to a collection of information by a Federal agency unless the collection displays a valid Office of Management and Budget (OMB) control number. The final rule does not have any requirements that are considered to be information collection requirements as defined by OMB in 5 CFR part 1320.

National Technology Transfer and Advancement Act

Section 12(d) of the National Technology Transfer and Advancement Act of 1995 (NTTAA), Public Law 104–113, section 12(d) (15 U.S.C. 272) directs us to use voluntary consensus standards in its regulatory activities unless doing so would be inconsistent with applicable law or otherwise impractical. Voluntary consensus standards are technical standards (*e.g.,* materials specifications, test methods, sampling procedures, and business practices) that are developed or adopted by voluntary consensus standards bodies, such as the Society of Automotive Engineers (SAE). The NTTAA directs us to provide Congress, through OMB, explanations when we decide not to use available and applicable voluntary consensus standards.

No voluntary consensus standards were used in developing today's final rule. This final rule only adjusts some test procedures and makes minor technical amendments to the February 2007 final rule. There are no voluntary standards that address the subject of this rulemaking.

Unfunded Mandates Reform Act

Section 202 of the Unfunded Mandates Reform Act of 1995 (UMRA) requires Federal agencies to prepare a written assessment of the costs, benefits and other effects of proposed or final rules that include a Federal mandate likely to result in the expenditure by State, local or tribal governments, in the aggregate, or by the private sector, of more than $100 million in any one year (adjusted for inflation with base year of 1995). Before promulgating a NHTSA rule for which a written statement is needed, section 205 of the UMRA generally requires us to identify and consider a reasonable number of regulatory alternatives and adopt the least costly, most cost-effective or least burdensome alternative that achieves the objectives of the rule. The provisions of section 205 do not apply when they are inconsistent with applicable law. Moreover, section 205 allows us to adopt an alternative other than the least costly, most cost-effective or least burdensome alternative if we publish with the final rule an explanation why that alternative was not adopted.

The final rule will not impose any unfunded mandates under the Unfunded Mandates Reform Act of 1995. This rulemaking does not meet the definition of a Federal mandate because it would not result in costs of $100 million (adjusted annually for inflation with a base year of 1995 or 116 million in 2003 dollars) or more to either State, local, or tribal governments, in the aggregate, or to the private sector. Thus, this rulemaking is not subject to the requirements of sections 202 and 205 of the UMRA.

Plain Language

Executive Order 12866 requires each agency to write all rules in plain language. Application of the principles of plain language includes consideration of the following questions:

- Has the agency organized the material to suit the public's needs?
- Are the requirements in the rule clearly stated?
- Does the rule contain technical language or jargon that is not clear?
- Would a different format (grouping and order of sections, use of headings, paragraphing) make the rule easier to understand?
- Would more (but shorter) sections be better?
- Could we improve clarity by adding tables, lists, or diagrams?
- What else could we do to make the rule easier to understand?

If you have any responses to these questions, please write to us about them.

Regulation Identifier Number (RIN)

The Department of Transportation assigns a regulation identifier number (RIN) to each regulatory action listed in the Unified Agenda of Federal Regulations. The Regulatory Information Service Center publishes the Unified

Agenda in April and October of each year. You may use the RIN contained in the heading at the beginning of this document to find this action in the Unified Agenda.

Privacy Act

Please note that anyone is able to search the electronic form of all documents received into any of our dockets by the name of the individual submitting the document (or signing the document, if submitted on behalf of an association, business, labor union, etc.). You may review DOT's complete Privacy Act Statement in the **Federal Register** published on April 11, 2000 (65 FR 19477–78) or you may visit *http://www.dot.gov/privacy.html.*

List of Subjects in 49 CFR Part 571

Motor vehicle safety, Report and recordkeeping requirements, Tires.

■ In consideration of the foregoing, NHTSA amends 49 CFR part 571 as follows:

PART 571—FEDERAL MOTOR VEHICLE SAFETY STANDARDS

■ 1. The authority citation for part 571 continues to read as follows:

Authority: 49 U.S.C. 322, 30111, 30115, 30117, and 30166; delegation of authority at 49 CFR 1.50.

■ 2. Section 571.206 is amended by revising paragraphs S4, S5.1.1.4(b)(2)(i)(C), S5.2.2.3(f)(1)(ii), S5.2.2.3(f)(3), S5.2.2.3(g)(1)(ii), S5.2.2.3(g)(3), S5.2.2.3(h)(1)(ii), S5.2.2.3(h)(3), S5.2.2.4(a), and Figure 7 to read as follows:

§ 571.206 Standard No. 206; Door locks and door retention components.

* * * * *

S4. *Requirements.* The requirements apply to all side and back doors, that lead directly into a compartment that contains one or more seating accommodations and the associated door components, except for those on folding doors, roll-up doors, detachable doors, bus doors used only for emergency egress purposes and labeled accordingly and on bus doors to accommodate a permanently attached wheelchair lift system that when the device is in the retracted position, the lift platform retracts to a vertical orientation parallel to and in close proximity with the interior surface of the lift door and in that position, the platform completely covers the doorway opening, has fixed attachments to the vehicle and provides a barricade to the doorway. The bus wheelchair lift door must be linked to an alarm system consisting of either a flashing visible signal located in the driver's compartment or an alarm audible to the driver that is activated when the door is not fully closed and the vehicle ignition is activated.

* * * * *

S5.1.1.4 * * *

(b) * * *

(2) * * *

(i) * * *

(C) Ensure that the door latch is in the fully-latched position, that the door is unlocked (doors may be tethered to avoid damaging the recording equipment), and that any windows, if provided, are closed.

* * * * *

S5.2.2.3 * * *

(f) * * *

(1) * * *

(ii) The plates are fixed perpendicular to the force application devices and move in the transverse direction. For alignment purposes, each plate is attached to the application device in a manner that allows for rotation about the vehicle's y-axis. In this manner, the face of each plate remains parallel to the vertical plane which passes through the vehicle's longitudinal centerline.

* * * * *

(3) The force application plate is positioned such that the long edge of the plate is as close to the interior edge of the door as possible, but not such that the forward edge of forward plate and the rear edge of the rear plate are more than 12.5 mm from the respective interior edges.

(g) * * *

(1) * * *

(ii) The plates are fixed perpendicular to the force application devices and move in the transverse direction. For alignment purposes, each plate is attached to the application device in a manner that allows for rotation about the vehicle's y-axis. In this manner, the face of each plate remains parallel to the vertical plane which passes through the vehicle's longitudinal centerline.

* * * * *

(3) The force application plate is positioned such that the long edge of the plate is as close to the interior edge of the door as possible, but not such that the forward edge of forward plate and the rear edge of the rear plate are more than 12.5 mm from the respective interior edges.

(h) * * *

(1) * * *

(ii) The plates are fixed perpendicular to the force application devices and move in the transverse direction. For alignment purposes, each plate is attached to the application device in a manner that allows for rotation about the vehicle's y-axis. In this manner, the face of each plate remains parallel to the vertical plane which passes through the vehicle's longitudinal centerline.

* * * * *

(3) The force application plate is positioned such that the long edge of the plate is as close to the interior edge of the door as possible, but not such that the forward edge of forward plate and the rear edge of the rear plate are more than 12.5 mm from the respective interior edges.

* * * * *

S5.2.2.4 *Test Procedure.*

(a) Increase the force on each force application device as linearly as practicable until a force of 9,000 N is achieved on each force application device in not less than 90 seconds and not more than 120 seconds, or until either force application device reaches a total displacement of 300 mm.

* * * * *

TABLES AND FIGURES TO § 571.206

* * * * *

FIGURE 7 - VEHICLE COORDINATE REFERENCE SYSTEM FOR INERTIAL TESTING

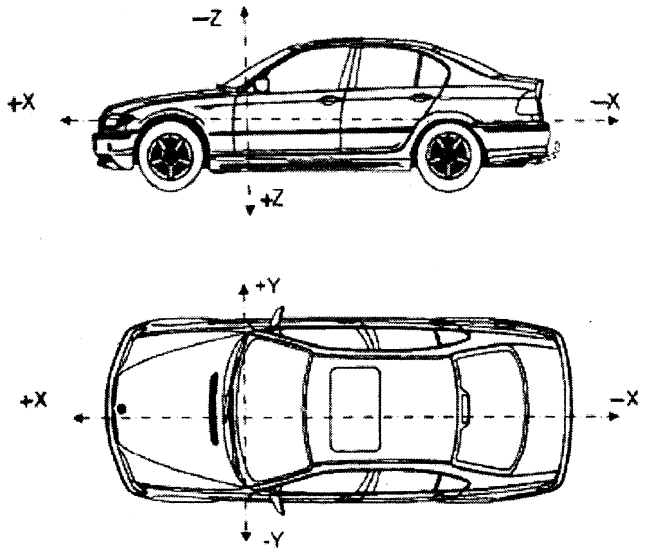

X = longitudinal direction
Y = transverse direction
Z = vertical direction

* * * * *

Issued: February 4, 2010.

David L. Strickland,

Administrator.

[FR Doc. 2010–2837 Filed 2–18–10; 8:45 am]

BILLING CODE 4910–59–P

DEPARTMENT OF COMMERCE

National Oceanic and Atmospheric Administration

50 CFR Part 229

[Docket No. 080721862–8864–01]

RIN 0648–AW51

Taking of Marine Mammals Incidental to Commercial Fishing Operations; Harbor Porpoise Take Reduction Plan Regulations

AGENCY: National Marine Fisheries Service (NMFS), National Oceanic and Atmospheric Administration (NOAA), Commerce.

ACTION: Final rule.

SUMMARY: NMFS issues this final rule to amend the regulations implementing the Harbor Porpoise Take Reduction Plan (HPTRP) to address the increased incidental mortality and serious injury of the Gulf of Maine/Bay of Fundy (GOM/BOF) stock of harbor porpoises (*Phocoena phocoena*) in gillnet fisheries throughout the stock's U.S. range.

DATES: Effective March 22, 2010.

ADDRESSES: Copies of the final Environmental Assessment (EA) and Regulatory Impact Review/Final Regulatory Flexibility Analysis (RIR/FRFA) for this action, as well as the Harbor Porpoise Take Reduction Team (HPTRT) meeting summaries and supporting documents, may be obtained from the HPTRP Web site (*http://www.nero.noaa.gov/hptrp*) or by writing to Diane Borggaard, NMFS, Northeast Region, Protected Resources Division, 55 Great Republic Drive, Suite 04–400, Gloucester, MA 01930.

FOR FURTHER INFORMATION CONTACT: Amanda Johnson, NMFS, Northeast Region, 978–282–8463, *amanda.johnson@noaa.gov;* or Melissa Andersen, NMFS, Office of Protected Resources, 301–713–2322, *melissa.andersen@noaa.gov.*

SUPPLEMENTARY INFORMATION:

Background

The HPTRP was developed pursuant to section 118(f) of the Marine Mammal Protection Act (MMPA), 16 U.S.C. 1361–1423h, to reduce the level of serious injury and mortality of the GOM/BOF stock of harbor porpoises. This final rule implements modifications to the HPTRP to address increased mortalities of harbor porpoises in commercial gillnet fisheries due to non-compliance with the HPTRP requirements and observed interactions occurring outside of existing HPTRP management areas. These modifications implement measures that apply to both the New England and Mid-Atlantic portions of the HPTRP.

Recent harbor porpoise bycatch estimates indicate that, when calculating the average estimated mortality for the period between 2002 and 2006, bycatch exceeded the stock's potential biological removal level (PBR). The 2008 Stock Assessment Report (SAR) indicates that the current annual estimated harbor porpoise incidental bycatch is 866 animals per year, which exceeds the current PBR of 610 animals (Waring *et al.,* 2009). In December 2007, NMFS reconvened the HPTRT to discuss the most recent harbor porpoise abundance and bycatch information for gillnet fisheries from Maine through North Carolina. The HPTRT used this information to develop a suite of recommended modifications to the HPTRP that would reduce takes to below the stock's PBR level and to a rate approaching a zero mortality and serious injury rate, known as the zero mortality rate goal (ZMRG), which is defined as 10 percent of PBR. The recommendations included expanding seasonal and temporal requirements within the HPTRP management areas, incorporating additional management areas, and creating areas that would seasonally close to gillnet fisheries if certain levels of harbor porpoise bycatch

are exceeded (consequence closure area strategy).

The HPTRT also recommended a number of non-regulatory measures that complement NMFS' strategy for monitoring the effectiveness of the HPTRP. NMFS will collaborate with its state partners in both the New England and Mid-Atlantic regions to conduct annual workshops with gillnet fishermen to increase compliance with the HPTRP and to provide information on recent compliance and harbor porpoise bycatch data. These meetings are especially important for gillnet fishermen in New England who fish in those HPTRP management areas that could potentially be impacted by the consequence closure strategy. Additionally, codifying the HPTRP into state regulations has the potential to increase compliance through future joint enforcement efforts between NMFS and state agencies.

NMFS supports efforts undertaken by the states to develop education and enforcement efforts to increase HPTRP compliance, and will assist in these efforts as needed. NMFS will assist these efforts by providing HPTRT members with annual compliance and bycatch information for both New England and the Mid-Atlantic, based on observed harbor porpoise serious injuries and mortalities. It is crucial that HPTRT members disseminate this information to their constituents, especially the gillnet industry, because these updates will analyze harbor porpoise bycatch rates in comparison to the target bycatch rates specified for the consequence closure areas.

To support the implementation of the regulatory and non-regulatory components of this action, NMFS will continue to work with its partners to monitor compliance and enforce the regulatory components of the HPTRP. In addition to collecting vital fisheries and incidental take information, the Northeast Fisheries Observer Program will continue its efforts to acquire new pinger detectors that will be sufficient for field use. NMFS also will continue its enforcement efforts through collaboration with its state enforcement partners, as well as the U.S. Coast Guard and NOAA Office of Law Enforcement. Such efforts include directed enforcement patrols and detecting functional pingers through the use of in-water pinger detection devices.

NMFS issued a proposed rule (74 FR 63058, July 21, 2009) that included a suite of additional HPTRP measures that will reduce harbor porpoise mortality due to interaction with commercial gillnet fisheries in New England and the Mid-Atlantic to levels below the stock's current PBR of 610 animals. This final rule implements the measures, many of which were based on consensus recommendations from the HPTRT, contained in the proposed rule. This action pursues the conservation goals established by the MMPA to reduce harbor porpoise bycatch to below PBR, and approaching insignificant levels.

Detailed background information on the development of this action, including a review of regional harbor porpoise bycatch information and recommendations provided to NMFS by the HPTRT, was provided in the July 21, 2009, proposed rule and is not repeated here.

Modifications to the HPTRP

This action addresses the bycatch of harbor porpoises that is currently above the stock's PBR level in New England and Mid-Atlantic waters. Many of the measures implemented through this rule are a result of consensus recommendations made by the HPTRT during their two recent meetings, which occurred in December 2007 and January 2008. For New England, NMFS is expanding seasonal and temporal requirements within the HPTRP management areas, incorporating additional management areas, and establishing "consequence" closure areas, which would seasonally close specific areas to gillnet fishing, should the specified target bycatch rate be exceeded by the observed average bycatch rate over the course of two consecutive management seasons. In the Mid-Atlantic, NMFS is establishing an additional management area and modifying the current tie-down requirement for large mesh gillnet gear. Additionally, NMFS is incorporating a provision within both the New England and Mid-Atlantic regulations to allow research to be conducted within the HPTRP management areas when the research is authorized through a NMFS scientific research permit. Finally, NMFS is making regulatory text corrections and clarifications.

New England Component

In the New England component of the HPTRP, NMFS is augmenting the existing HPTRP by incorporating two new management areas with seasonal pinger requirements: The Stellwagen Bank and Southern New England Management Areas. The Stellwagen Bank Management Area will require pingers from November through May. The Southern New England Management Area will require pingers on gillnets from December through May, while retaining the Cape Cod South Closure Area during March. NMFS is modifying one of the latitudinal boundaries of the Massachusetts Bay Management Area to 42°15′ N. lat., to eliminate the small gap of unregulated waters between this management area and the southern boundary of the Western Gulf of Maine Closure Area under the Northeast Multispecies Fishery Management Plan. Additionally, NMFS is extending the seasonal pinger requirements in the Massachusetts Bay Management Area to include November. Figure 1 depicts the management measures for the New England component of the HPTRP implemented by this action.

BILLING CODE 3510–22–P

Figure 1: HPTRP management scheme for New England when target bycatch rates are not exceeded

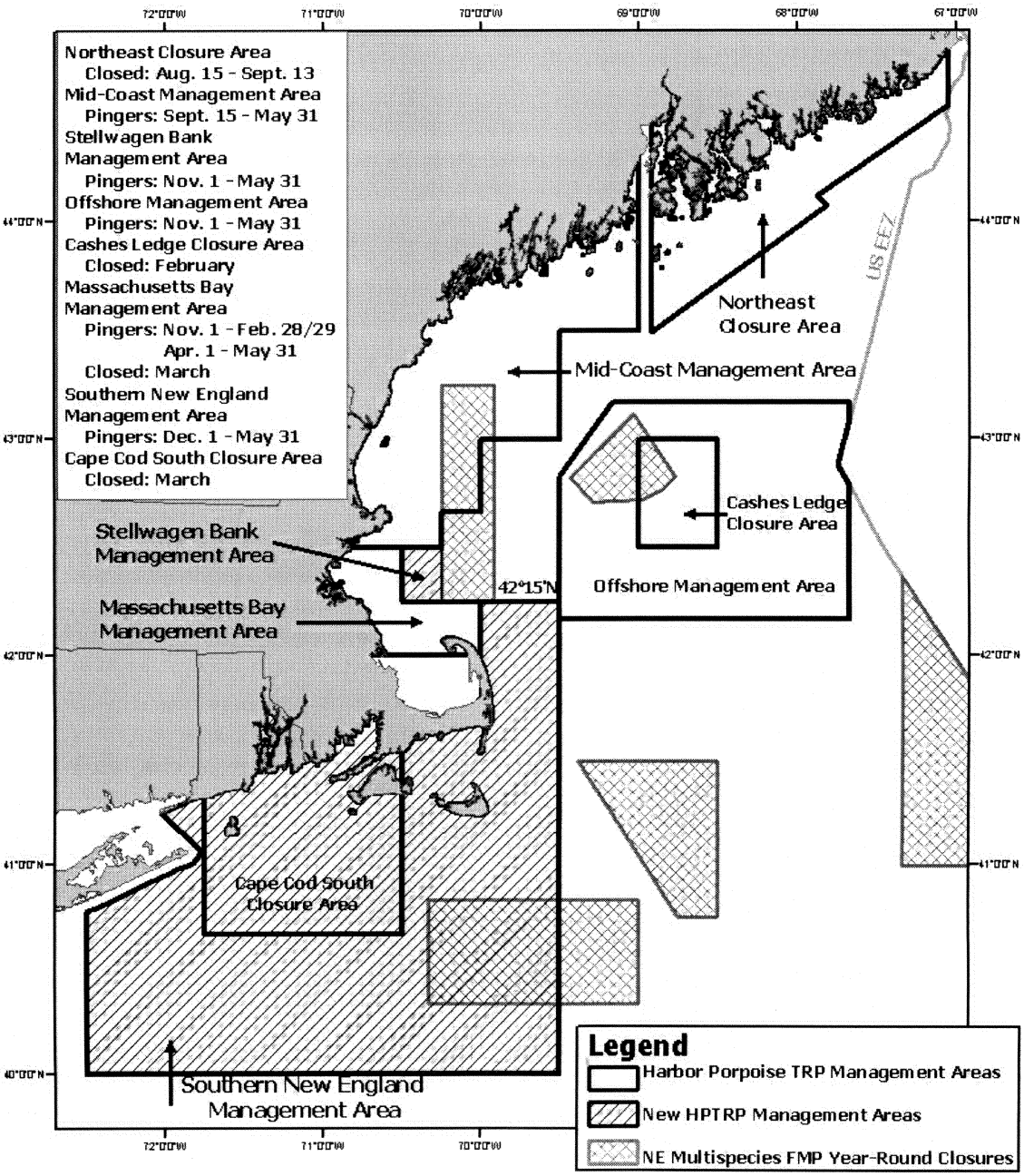

This action also incorporates the concept of "consequence" closure areas to alleviate non-compliance with pinger requirements in certain management areas. The Cape Cod South Expansion and East of Cape Cod Consequence Closure Areas, and their associated seasonal gillnet gear closures, will be triggered if the observed average bycatch rate of harbor porpoises in the Southern New England Management Area exceeds the target bycatch rate of 0.023 harbor porpoise takes/mtons after two consecutive management seasons (December through May). If triggered, these two areas will be closed annually to gillnet fishing from February through April. When the consequence closure areas are not closed (December, January, and May), the seasonal pinger requirements of the Southern New England Management Area will remain in effect.

The Coastal Gulf of Maine Consequence Closure Area, and its associated seasonal gillnet gear closure, will be triggered if the observed average

bycatch rates of harbor porpoises in the Mid-Coast, Stellwagen Bank, and Massachusetts Bay Management Areas (combined) exceed the target bycatch rate of 0.031 harbor porpoise takes/mtons after two consecutive management seasons (September 15 through May 31 for the Mid-Coast Management Area, and November 1 through May 31 for the Stellwagen Bank and Massachusetts Bay Management Areas). If the target bycatch rate is met, this area will be closed annually to gillnet fishing in October and November. When this area is not closed, the seasonal requirements of the three management areas will remain in effect, including the March gillnet closure in the Massachusetts Bay Management Area.

Figure 2 depicts the management measures for the New England component implemented by this action, including the three consequence closure areas.

Figure 2: HPTRP management scheme for New England when both target bycatch rates are exceeded (i.e., consequence closure areas triggered)

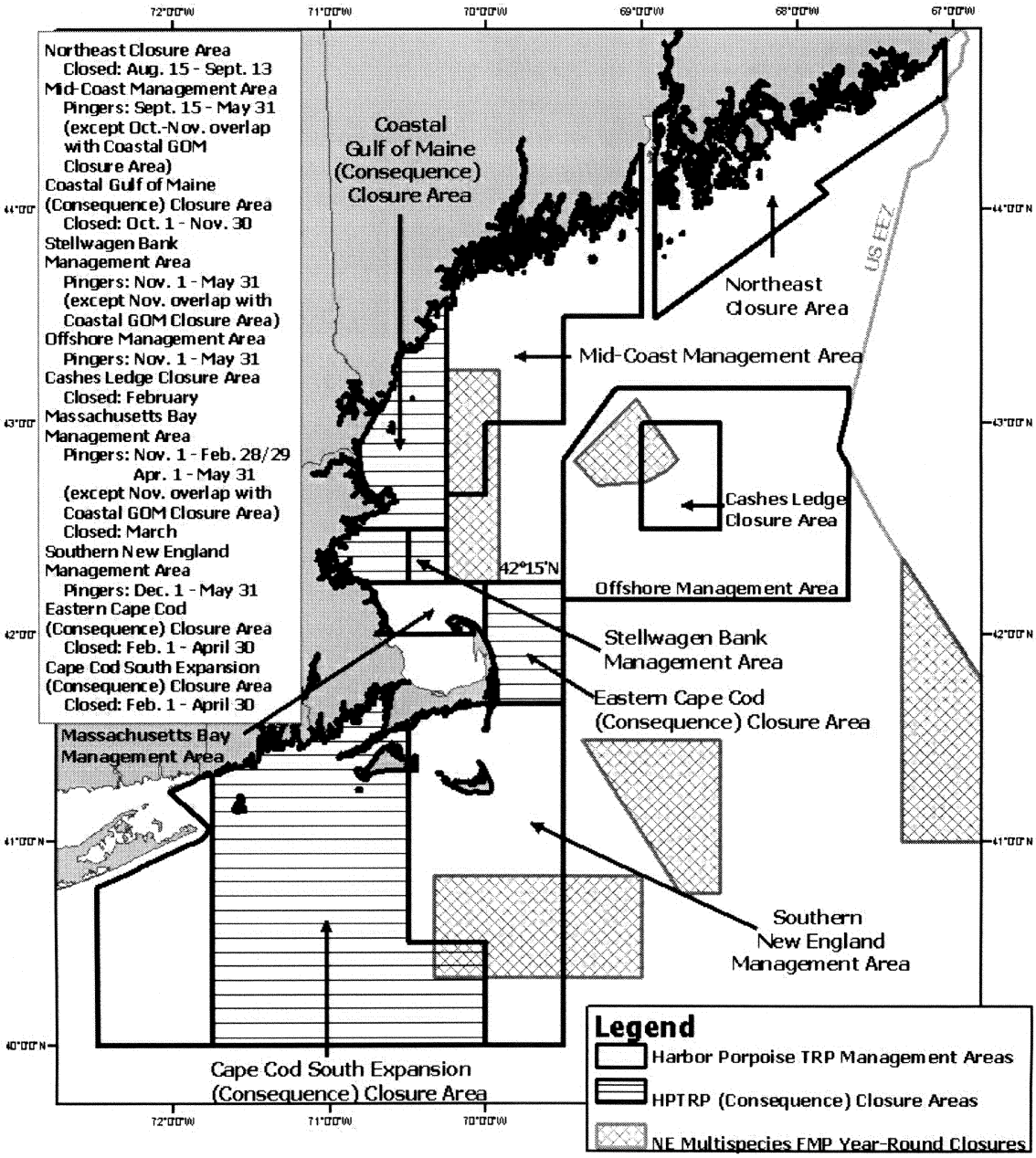

If any of the consequence closure areas are triggered, they will remain in effect until bycatch levels of the GOM/BOF stock of harbor porpoises approach ZMRG, or until the HPTRT and NMFS develop and implement new conservation measures. If the consequence closure areas are not triggered after the first two management seasons have elapsed, NMFS will continue to monitor the observed bycatch rates in these management areas and adopt a rolling trigger in which the most recent 2 years of bycatch information will be averaged and compared on an annual basis to the specified bycatch rates for each management area.

All impacts of the consequence closure areas have been evaluated in the EA that accompanies this action. If it is necessary to establish consequence closure areas in the future, based on the most recent 2 years of observed harbor

porpoise bycatch data, NMFS will establish the appropriate consequence closure area(s) via notice in the **Federal Register.**

Technical Corrections—New England Component

This final rule incorporates all of the technical corrections for the New England component of the HPTRP as described in the preamble of the proposed rule. These include: (1) Incorporating shoreline latitude/longitude coordinates to more clearly specify HPTRP management area boundaries; (2) renaming "closure" areas as "management" areas, except for areas that exist only as complete closures; (3) clarifying the geographical enclosure of the Offshore and Cashes Ledge Management Areas by repeating the first area coordinate as the last coordinate; (4) correcting the regulatory text for the Mid-Coast Management Area to indicate that gillnet fishing is allowed within this area as long as pingers are used; (5) including a statement specifying that pingers must be placed every 300 ft (91.4 m) for gillnets that exceed 300 ft (91.4 m) in length; and (6) modifying the eastern boundary of the Offshore Management Area so that it does not cross the boundary of the Exclusive Economic Zone (EEZ).

Mid-Atlantic Component

In the Mid-Atlantic component of the HPTRP, NMFS is creating the Mudhole South Management Area, with seasonal gear restrictions and a closure period from February 1 through March 15 (Figure 3).

Figure 3: HPTRP management scheme for the Mid-Atlantic.

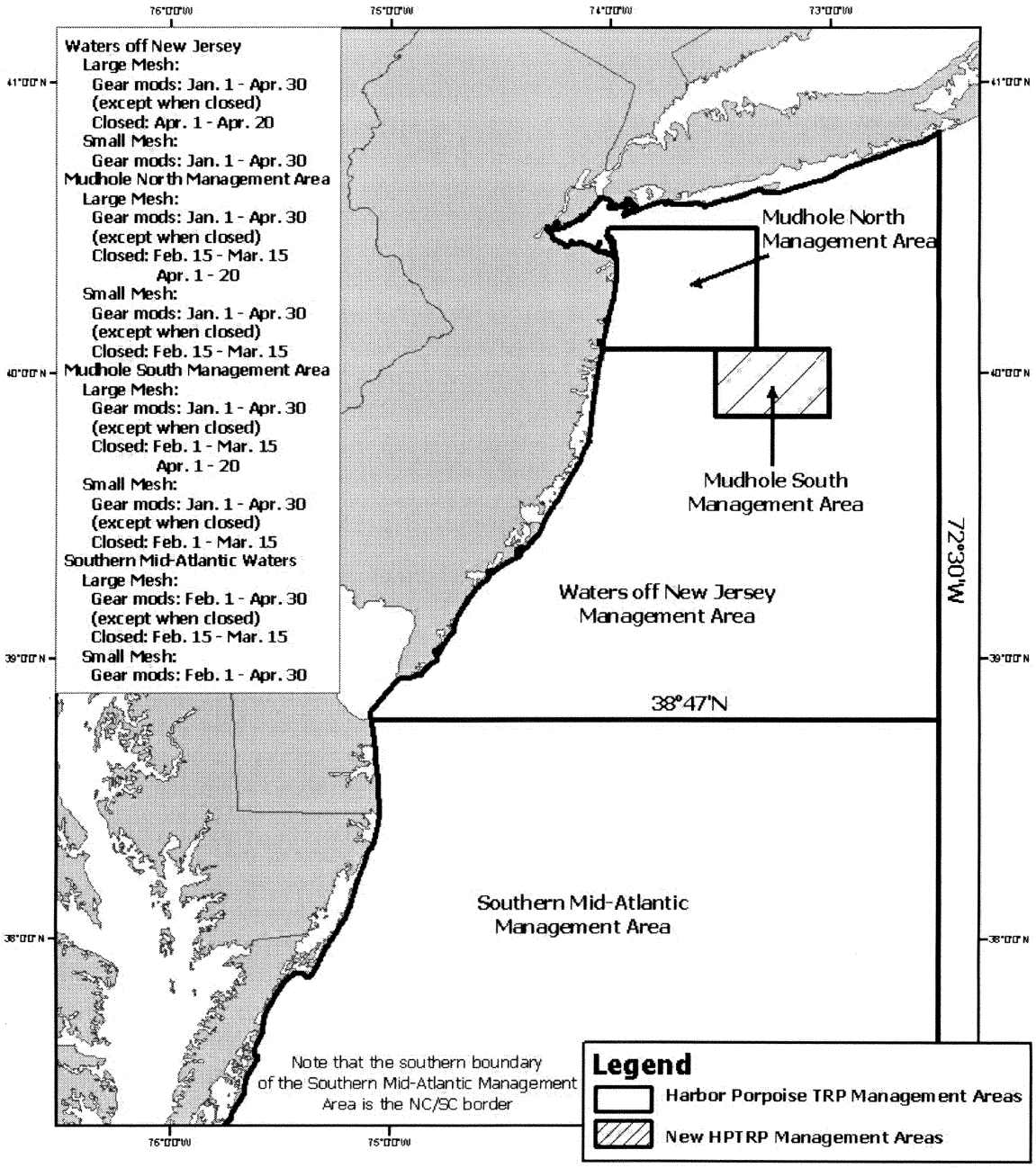

BILLING CODE 3510–22–C

Additionally, this action will increase the current tie-down spacing for large mesh gillnet gear to no more than 24 ft (7.3 m) apart along the floatline.

Technical Corrections—Mid-Atlantic Component

This final rule incorporates all of the technical corrections for the Mid-Atlantic component of the HPTRP as described in the preamble of the proposed rule. These include: (1) Incorporating shoreline latitude/longitude coordinates to more clearly specify HPTRP management area boundaries; (2) clarifying the number of nets per string allowed within the management areas for both large and small mesh gillnet gear; (3) extending the northern boundary of the Waters off New Jersey Management Area to the southern shoreline of Long Island, NY, at 40°50.1′ N. lat. and 72°30′ W. long.; (4) correcting the geographic boundary of the Mudhole North Management Area by incorporating a coordinate that intersects with the New Jersey shoreline at 40°28.1′ N. lat. and 74°00′ W. long.; (5) redefining the southern latitudinal boundary of the Southern Mid-Atlantic Management Area located at the North Carolina/South Carolina border to correspond with 33°51.1′ N. lat.; (6) amending the description of exempted waters in Virginia from Chincoteague to Ship Shoal Inlet to be the waters landward of the 72 COLREGS demarcation lines between these two inlets; and (7) removing the net tagging

requirement for large and small mesh gillnet gear.

Scientific Research

This action includes a scientific research component to the HPTRP regulations that would allow scientific research on gear and/or fishing practice modifications for reducing harbor porpoise takes to be conducted within the HPTRP management areas during the times the seasonal requirements are in effect, so long as the research is authorized through a scientific research permit granted under the MMPA. A scientific research permit would be obtained through the existing permit application process administered by NMFS, which includes a regional review and public comment period after publication of an announcement in the **Federal Register.**

Comments and Responses

NMFS published the proposed rule amending the HPTRP in the **Federal Register** on July 21, 2009 (74 FR 36058). Upon its publication, NMFS issued a press release summarizing the rule; posted the proposed rule on the HPTRP Web site; and notified affected fishermen and interested parties via several NMFS email distribution outlets. The publication of the proposed rule was followed by a 30-day public comment period, which ended on August 20, 2009. NMFS received nine comments via facsimile, letter, or electronic submission. All comments received were thoroughly reviewed by NMFS. The comments addressed several topics, such as education and outreach, management area boundaries and requirements, pingers, and the consequence closure strategy. The comments received are summarized below, followed by NMFS's responses.

General Comments

Comment 1: The majority of commenters expressed general support for the proposed rule.

Response: NMFS appreciates the comments it has received in support of this action, and notes that many of the proposed measures were based on consensus recommendations provided by the HPTRT during its December 2007 and January 2008 meetings.

Comment 2: One commenter expressed general opposition to the proposed rule by stating that bycatch of harbor porpoises in commercial gillnet gear needs to be immediately reduced to zero.

Response: NMFS understands the commenter's concern. However, the level of harbor porpoise takes need not be set to zero to ensure that the goals of the MMPA for harbor porpoise protection are met. Over the past two decades, NMFS has undertaken a variety of efforts to reduce the bycatch of harbor porpoises in commercial gillnet fisheries. After implementation of the HPTRP in late 1998 (63 FR 66464, December 2, 1998), bycatch of harbor porpoises was significantly reduced to below the stock's PBR level from levels as high as 1,500 animals per year, prior to implementation of the HPTRP, to a low of 310 animals per year. At that time, the bycatch level for harbor porpoises was below PBR and the bycatch trend was approaching ZMRG, which is defined in 50 CFR 229.2 as 10 percent of PBR.

However, as detailed in the EA supporting this rule, when data began to show that harbor porpoise interactions with gillnet fisheries were rising, NMFS immediately took actions to address the issue by sending permit holder letters, conducting outreach meetings from Maine through New Jersey, and reconvening the HPTRT in December 2007 to discuss recent bycatch and abundance information to assist the HPTRT in providing recommendations to NMFS on additional measures to reduce harbor porpoise takes. As described in the preamble to the proposed rule for this action, documented interactions between harbor porpoises and gillnet gear were observed both within and outside of existing HPTRP management areas. As such, the HPTRT was charged with providing recommendations to NMFS for modifying the HPTRP that would address both issues. The HPTRT reached consensus on many of the measures that are implemented in this final rule. Once implemented, these measures will achieve a harbor porpoise take level that is below PBR and approaching ZMRG, meeting NMFS' obligations under the MMPA.

Management Areas

Comment 3: The State of Connecticut's Department of Environmental Protection disagreed with the upper northwest boundary of the proposed Southern New England Management Area, requesting that the boundary as it crosses Long Island Sound be moved eastward to be consistent with the Atlantic Large Whale Take Reduction Plan (ALWTRP) exemption line in this area.

Response: NMFS has evaluated the request to modify the western boundary of the Southern New England Management Area in the vicinity of Long Island Sound, and has determined that the modification is not warranted for a variety of reasons. First, the basis provided for modifying the line to become consistent with the exemption line in this area as defined by the ALWTRP is not appropriate. The ALWTRP exemption line was established based on the rarity of large whale sightings westward of the ALWTRP exemption line. The HPTRP Southern New England Management Area was established based on the presence of harbor porpoise in that area.

Regarding consistency, this line was recommended by the HPTRT because it is a boundary line that is consistent with an existing boundary line under the Northeast Multispecies Fishery Management Plan, and is a line with which gillnet fishermen in this area are familiar. The commenter also noted that the ALWTRP exemption line delineates the locations in which residents of the states of New York, Connecticut, and Rhode Island are authorized to fish. However, these authorizations are state-driven; therefore, the boundary line of the Southern New England Management Area will not affect state authority in determining where state permitted vessels may fish.

Comment 4: Two commenters requested that NMFS codify the Northeast Multispecies Fishery Management Plan (FMP) Western Gulf of Maine Closure Area into the HPTRP as recommended by the HPTRT. Both commenters encouraged this in the event that the Western Gulf of Maine Closure Area is removed from the Northeast Multispecies FMP. One commenter noted that the Massachusetts Bay Management Area was originally a Northeast Multispecies FMP closure that was codified into the HPTRP and subsequently removed as a groundfish closure.

Response: NMFS acknowledges that the HPTRT recommended, by consensus, the incorporation of the Multispecies FMP Western Gulf of Maine Closure Area into the HPTRP. However, NMFS disagrees with this recommendation. As described in the preamble to the regulations implementing the HPTRP (63 FR 66464, December 2, 1998), NMFS established the boundaries of the HPTRP management areas based on the distribution of harbor porpoises and bycatch rates along the New England coast. The portion of the Western Gulf of Maine Closure Area that had a high bycatch of harbor porpoises prior to implementation of the HPTRP was included under the HPTRP as part of the Mid-Coast Management Area. Therefore, since the portion of the Western Gulf of Maine Closure Area that has traditionally had high bycatch rates of harbor porpoises is already contained

within the Mid-Coast Management Area under the HPTRP, should the Western Gulf of Maine Closure Area be reopened to gillnet fishing in the future, the area with historically high harbor porpoise bycatch levels is already contained within the overlapping Mid-Coast Management Area under the HPTRP. At the present time, harbor porpoise bycatch information within the remaining portion of the Western Gulf of Maine Closure Area (not overlapping with the Mid-Coast Management Area) does not exist since this area has been closed to gillnet fishing since 1998. Consequently, NMFS cannot evaluate the conservation benefit or the economic impacts of the entire closure area if it were codified under the HPTRP. For these reasons, NMFS believes codifying the Western Gulf of Maine Closure Area under the HPTRP is not warranted at this time.

Comment 5: One commenter requested that NMFS adjust the mesh size requirements or the seasons of the Southern Mid-Atlantic Management Area to not affect striped bass fishermen in this area. Conversely, another commenter commended NMFS for not making adjustments to the Southern Mid-Atlantic Management Area to exempt striped bass fishermen, noting that it is outside of common practice for a take reduction plan to regulate by target species, rather than by gear type.

Response: NMFS decided not to modify the closure period or the definition of large mesh gillnets for the Southern Mid-Atlantic Management Area. To ensure adequate management of incidental interactions between marine mammals and fisheries, take reduction plans manage fisheries by gear type, rather than by sub-fisheries or target species. In addition, modifying the definition of large mesh gillnets would conflict with the Bottlenose Dolphin Take Reduction Plan, as this plan uses the same definition, and therefore would likely result in confusion for gillnet fishermen in this region.

Further, during the December 2007 HPTRT meeting, a member requested that the HPTRT consider a verbal proposal to exempt striped bass fishermen using large mesh gillnets in Virginia state waters from the seasonal large mesh gillnet closure from February 15 through March 15 in the Southern Mid-Atlantic Management Area. The rationale provided for the exemption was that this closure affected the brief window of opportunity for fishing for the striped bass ocean fishing season for southern states. The HPTRT did not have sufficient time to fully discuss this request at the December meeting. Therefore, NMFS included this issue as a topic for discussion on the agenda for the January 2008 HPTRT follow-up teleconference meeting.

Prior to the teleconference, the HPTRT representative from the Commonwealth of Virginia sent the meeting facilitator a report completed by the Virginia Institute of Marine Science to further support the request for an exemption. This document was forwarded to NMFS and the HPTRT for consideration during the teleconference.

The report examined net size selectivity for capturing striped bass in Virginia's coastal and estuarine waters from mid-February through March of 2005, indicating that 8-inch (20.32-cm) mesh nets captured striped bass of legal size 99.9 percent of the time, whereas 7-inch (17.78-cm) mesh nets captured legal-sized bass only 70 percent of the time.

During the teleconference, the HPTRT was unable to reach consensus on this issue. After the teleconference, NMFS requested that Virginia submit a proposal outlining the exemption request and justification of its necessity. The proposal requested an adjustment to the definition of large mesh gillnets under the HPTRP by increasing the restricted mesh size from the current 7 inches (17.78 cm) to 8 inches (20.32 cm) for Virginia state waters from February 15 through March 15; the proposal also suggested incorporating a consequence closure strategy for this area. This 1-inch (2.54-cm) increase in mesh size would allow striped bass fishing from February 15 through March 15, and would also reduce the catch of undersized striped bass. This proposal, along with a separate proposal from NMFS, which included either no change or an examination of shifting the closure period to March 1–31, was considered, but, for the reasons provided above, none were adopted by the HPTRT or NMFS.

Pingers

Comment 6: One commenter recommended that NMFS allow the use of pingers that have different specifications from those required by the HPTRP, including the use of pingers that emit a tone of a frequency higher than 10 kHz.

Response: NMFS has not proposed any modifications to the pinger specifications that are outlined in the HPTRP. Recent analyses completed by the NMFS Northeast Fisheries Science Center further support the conclusion that pingers of the current specifications successfully decrease harbor porpoise bycatch in gillnet fisheries when the pingers function properly and are deployed in the correct manner (Palka *et al.,* 2008).

NMFS acknowledges that, in certain areas, pingers may alert seals to the presence of gillnet gear, which can result in depredation on the fish caught in the nets. To alleviate this problem, the HPTRT and others have discussed experimenting with pingers of a higher frequency, in which the pinger is inaudible to seals but is still within the hearing range of harbor porpoises. Higher frequency pingers are currently being used in some gillnet fisheries in Europe. However, to date, no testing has been conducted in U.S. waters to examine the effects of these devices on the Gulf of Maine/Bay of Fundy stock of harbor porpoises and U.S. gillnet fisheries. NMFS cannot incorporate higher frequency pingers into the HPTRP without first examining the effects on harbor porpoises and other marine species. NMFS notes that this action will incorporate a scientific research provision into the HPTRP, which would allow for such experimentation within HPTRP management areas so long as a scientific research permit is acquired. If it becomes necessary, NMFS will revise this rule through notice and comment rulemaking to allow different pinger standards.

Comment 7: One commenter stated that NMFS should provide pinger detection devices to fishery observers to determine if pingers on nets are functioning properly. Alternatively, the commenter recommended that NMFS should provide observers with pingers to give to fishermen in exchange for collecting pingers on each end of an observed harbor porpoise take for testing.

Response: The NMFS Northeast Fishery Observer Program (NEFOP) currently has six open-air pinger detectors that are routinely provided to observers on gillnet vessels for the detection of functioning pingers. NEFOP staff are developing a contract for the design and purchase of new, improved open-air pinger detectors to replace the current detectors. The new detectors will be more durable than the current detectors.

According to the NEFOP Fisheries Observer Program Manual (revised January 1, 2008), observers must record the condition of an active deterrent device (e.g., pinger) immediately following the incidental take of a marine mammal, sea turtle, or sea bird. If possible, immediately preceding an incidental take the observer must also record the condition of the active deterrent device in use. Based on these protocols and the ability of observers to

detect functioning pingers, it is not necessary to exchange new pingers for pingers on gillnet gear in which an incidental take is observed.

Comment 8: One commenter recommended that, due to the difficulty associated with checking pinger functionality at sea, NMFS establish a shoreside pinger inspection program to ensure that all gillnet fishermen fishing in areas in which pingers are mandatory have the required number of fully functional pingers on their gear.

Response: NMFS disagrees that there are difficulties associated with checking pinger functionality at sea. NMFS has strategies and tools in place to check for functioning pingers at sea. First, NMFS has purchased underwater pinger detectors that can check for functioning pingers on gillnet gear while the gear is being fished in the water, or while the gear is being hauled back onto the vessel. NMFS is currently working with state and Federal enforcement partners on the use of these detectors within the HPTRP management areas in New England. The states of Maine, Massachusetts, and Rhode Island have been loaned four of these detectors for use aboard state enforcement vessels during patrols. Additionally, as described in the response to Comment 7, the NEFOP staff is in the process of purchasing new open-air pinger detectors that can check the functionality of pingers on gillnet gear as it is hauled on board the vessel.

Additionally, NMFS disagrees with the necessity to establish a shoreside pinger inspection program, because such a program would be costly and would ultimately not ensure that all gillnet fishermen that fish within the HPTRP management areas have the required number of functional pingers on their gear. NMFS currently has an established pinger training and authorization program, which ensures that gillnet vessel operators receive one-time training in the use of pingers and maintain on board their vessel a valid pinger training authorization provided by NMFS. Additionally, the HPTRT recommended a consequence closure area strategy in New England for the purpose of providing an incentive for increasing compliance with the pinger requirements. This rule will implement this strategy in the GOM and Southern New England (SNE) areas, which are historically areas of high harbor porpoise bycatch. NMFS recognizes the importance of compliance to ensure that the effectiveness of the HPTRP in reducing interactions between harbor porpoises and gillnet fisheries is maximized. As such, NMFS will continue to work with its various partners (e.g., states, U.S. Coast Guard, NOAA Office of Law Enforcement, NEFOP) to monitor compliance with the HPTRP and enforce its regulatory components.

Consequence Closure Strategy

Comment 9: Two commenters requested that NMFS act quickly in implementing the consequence closure areas if the target bycatch rates in their respective management areas are exceeded. One commenter suggested that NMFS complete the required analyses for implementing the consequence closure areas in conjunction with this rulemaking in order to expedite the potential implementation of these closures in the future.

Response: NMFS agrees that it is imperative to act as quickly as possible to implement consequence closure areas, should target bycatch rates be exceeded after two consecutive management seasons. Through this action and through completion of the final EA, NMFS has completed the required analyses for implementing consequence closure areas, should they occur over the course of the next 10 years. NMFS has also established language in the regulatory text of this action that explains the annual review process for consequence area closure actions, including the establishment of the consequence closure areas if the target bycatch levels are exceeded; notification to the HPTRT and affected gillnet permit holders (e.g., advance notification through mailings, publication in the **Federal Register,** and postings on the HPTRP Web site) should consequence areas become triggered; and continued monitoring of harbor porpoise bycatch rates after implementation of consequence closure areas.

Outreach and Enforcement

Comment 10: One commenter, in expressing support for the proposed rule, stressed the importance of future outreach and education efforts with the commercial fishing industry as being crucial to the effectiveness of this management plan.

Response: NMFS agrees that future outreach and education efforts are important components for ensuring the effectiveness of the HPTRP. The HPTRP monitoring strategy incorporates a number of measures designed to increase education and outreach efforts. First, NMFS will provide annual updates to the HPTRT to provide compliance and bycatch information. This information is especially important for New England, and therefore this information will focus on the consequence closure area strategy. Also, NMFS will work with its New England and Mid-Atlantic state partners to conduct annual workshops with the gillnet industry to provide updated information on compliance and harbor porpoise bycatch data. In New England, these meetings are especially important for reviewing bycatch rates in those management areas affected by the consequence closure area strategy, and for reviewing how those bycatch rates relate to the target bycatch rates. Finally, NMFS supports the development of additional state education and enforcement efforts to increase compliance with the HPTRP.

Comment 11: One commenter noted that HPTRP enforcement and industry outreach efforts must be more vigorous in the future than they have been in the past.

Response: NMFS agrees with this comment and will continue to work with its various partners, such as state agencies, the U.S. Coast Guard, and the NOAA Office of Law Enforcement, on HPTRP enforcement and industry outreach efforts. By consensus recommendation, the HPTRT state agency members committed to conducting annual workshops with the gillnet industry after publication of this rule to increase compliance with the HPTRP, as well as to provide updated harbor porpoise bycatch and compliance information. These workshops will be especially important in the New England areas that would potentially be affected by the implementation of consequence closure areas. In addition, NMFS will continue to provide pinger training. This training provides information on the HPTRP management areas and requirements, as well as information on the use of pingers. Also, NMFS will continue to maintain its existing outreach efforts, which include ensuring that the HPTRP Web site contains relevant and current information, communicating directly with HPTRT members, and sending permit holder letters to the gillnet industry.

NMFS is committed to maintaining and improving upon its relationship with the U.S. Coast Guard and the NOAA Office of Law Enforcement, as well as its state enforcement partners, to monitor the effectiveness of the HPTRP. As discussed in response to Comment 8, state enforcement officials in Maine, Massachusetts, and Rhode Island have incorporated in-water pinger detectors into their patrols. NMFS is also coordinating with its Federal enforcement partners on the use of this equipment, as well as on the ability to

conduct dedicated enforcement patrols to ensure gillnet gear is in compliance with the HPTRP. Finally, NMFS will coordinate with all of these partners to ensure updated enforcement information is provided to the HPTRT in its annual compliance updates.

Harbor Porpoise Bycatch Estimates

Comment 12: One commenter stated that NMFS should base harbor porpoise bycatch estimates on all regional fisheries in which mortalities and serious injuries occur, including trawl gear and Canadian fisheries.

Response: NMFS monitors harbor porpoise bycatch in all commercial fisheries through the annual SAR process. The majority of fishery interactions for the GOM/BOF stock of harbor porpoises occurs in the Northeast sink gillnet and Mid-Atlantic gillnet fisheries. Bycatch estimates in Canadian gillnet fisheries are unknown, as the fishery has not been observed from 2002 through the present time. NMFS will continue to monitor the annual SARs for interactions between harbor porpoises and all fisheries.

Comment 13: One commenter recommended that NMFS consult with its Canadian counterpart regarding the need to increase Canadian gillnet observer coverage to assess harbor porpoise bycatch in the Canadian sink gillnet fishery.

Response: NMFS agrees. NMFS is working with Canada's Department of Fisheries and Oceans (DFO) to address this issue. Nonetheless, harbor porpoise bycatch in U.S. gillnet fisheries exist and must be addressed by NMFS through the HPTRP.

Changes From the Proposed Rule

There are no changes from the proposed rule.

Classification

The Office of Management and Budget (OMB) has determined that this action is significant for the purposes of Executive Order 12866.

A description of the action and its legal basis are contained in the preamble of this final rule. This final rule does not include any reporting or recordkeeping requirements, nor does it include compliance requirements other than those described in the preamble. No duplicative, overlapping, or conflicting Federal rules have been identified.

NMFS has prepared a final regulatory flexibility analysis (FRFA) that describes the economic impact this rule will have on small entities. A summary of the analysis follows. No comments were received on the initial regulatory flexibility analysis (IRFA) or the economic impacts of the proposed rule.

All of the entities (fishing vessels) affected by this action are considered small entities under the Small Business Act size standards for small fishing businesses. The fisheries affected by this final rule are the Northeast sink gillnet and Mid-Atlantic gillnet fisheries. These fisheries are currently regulated under the HPTRP to reduce the serious injury and mortality of harbor porpoises; this rule implements additional restrictions. The population of vessels affected by this action includes all commercial gillnet vessels fishing in Federal waters from the U.S./Canada border to North Carolina, as well as vessels fishing in state waters that are managed under the HPTRP. In 2006 and under the current HPTRP, there were 975 gillnet vessels that landed an estimated 23,276 mt of fish, generating approximately $40,643,000 in revenue.

In preparing this action, NMFS considered multiple alternatives—Alternative 1, no action; Alternative 2, immediate implementation of closures; Alternative 3, broad-based pinger requirements; Alternative 4, this action, or the "preferred alternative"; and Alternative 5, modified preferred alternative.

Under Alternative 1, NMFS would maintain the status quo HPTRP. This would result in no changes to the current measures under the HPTRP and, as such, would result in no additional economic effects to the affected commercial fisheries. However, this alternative would not achieve the reduction in incidental mortality and serious injury of harbor porpoises in commercial fishing gear required under the MMPA, because it would not reduce the estimated harbor porpoise mortality of 1,063 animals in 2006, which is above the PBR level. Therefore, NMFS rejected this alternative.

Under Alternative 2, NMFS would immediately implement additional area closures to the existing measures of the HPTRP. This alternative includes immediate implementation of the closure areas recommended by the HPTRT, known in this rule as consequence closure areas, in New England. Out of the five alternatives, Alternative 2 had the lowest estimated reduction in harbor porpoise bycatch of all the alternatives considered, at 54 percent, or 573 fewer animals from the status quo 2006 estimate of 1,063 animals. Additionally, Alternative 2 had the highest estimated cost to the commercial fishing industry of all the alternatives considered, with a 5-percent ($1,947,000) reduction in annual revenues. For these reasons, NMFS rejected this alternative.

Under Alternative 3, NMFS would implement broad-based pinger management areas covering the geographic range of the GOM/BOF stock of harbor porpoises in New England and the Mid-Atlantic region. Alternative 3 had a higher estimated cost for the commercial fishing industry per harbor porpoise saved than the preferred alternative (if consequence areas are not triggered), with less than 1-percent ($374,000) reduction in annual revenues, and a lower estimated reduction in harbor porpoise bycatch, at 60 percent. In part because it would result in a higher cost per porpoise saved, while providing a lower reduction in porpoise bycatch than the other alternatives, NMFS rejected this alternative.

Under Alternative 4, existing management areas in New England and the Mid-Atlantic are expanded and additional management areas are created to address areas of high harbor porpoise bycatch. This alternative incorporates additional measures to the existing HPTRP. For New England (Maine through Rhode Island), new measures include (1) additional pinger requirements; (2) the establishment of new management areas; and (3) the incorporation of consequence closure areas should the observed average bycatch rate in certain management areas exceed a specified target bycatch rate averaged over the course of two consecutive management seasons. For the Mid-Atlantic (New York through North Carolina), new measures include (1) the establishment of a new management area, which includes a seasonal closure; and (2) a modification to the large mesh gillnet tie-down spacing requirement (which is not included in the analysis because it would not result in additional costs to gillnet fishermen).

This alternative incorporates the potential for future closures. Accordingly, this analysis examines four different scenarios for this alternative, based on the potential for implementation of consequence closure areas. The first scenario examines impacts of additional HPTRP conservation measures (e.g., establishment of new pinger and closure areas) prior to triggering the closure of any consequence closure area (Pre-closure). The second scenario examines the impacts if only the Coastal Gulf of Maine Consequence Closure Area is implemented (GOM-closure), and the third scenario analyzes the impacts if only the Cape Cod South Expansion and Eastern Cape Cod Consequence Closure

Areas are implemented (SNE-closure). The fourth scenario investigates the impacts should all three consequence closure areas be implemented simultaneously, which would occur if both target bycatch rates are exceeded (GOM/SNE-closures).

(1) The Pre-closure scenario would have the smallest impact on the gillnet industry out of the four scenarios that are possible under this alternative, because it is assumed that, for GOM ports (Maine to South of Boston), 82 to 98 percent of these vessels already own pingers. Therefore, the expanded requirements for the use of pingers are not expected to result in significant impacts. The majority of the affected vessels under this scenario at the regional, or port, level consist of vessels in port groups East of Cape Cod to New Jersey, due to the creation of the Southern New England Management Area with new pinger requirements and the Mudhole South Management Area, which incorporates a seasonal closure. In addition, the impact of the Pre-closure scenario in terms of landings is small. For the East of Cape Cod through New Jersey port groups, the percentage change in landings varies between a 1-percent increase (East of Cape Cod) and a 1-percent reduction. Percentage reductions in revenues for these port groups range from 1 to 3-percent, with the highest (3 percent) in the New York port group.

Revenues for affected vessels under the Pre-closure scenario vary for small vessels (less than 40 ft (12.2 m)) and for large vessels (40 ft (12.2 m) and greater). Revenues for small vessels would be reduced between 1 and 6 percent (approximately $800 to $4,700), while annual revenues for large vessels would be reduced between 1 and 7 percent (approximately $2,600 to $7,200). At the industry (i.e., small entity) level, the Pre-closure scenario can be expected to affect 10 percent of gillnet vessels in the fleet, or 101 vessels. This equates to less than a 1-percent reduction in landings and revenues. Less than a 1-percent (6-mt) decline in overall industry landings is expected, which equates to an approximate $183,000 decrease in revenues.

(2) The GOM-closure scenario would implement the Coastal Gulf of Maine Consequence Closure Area as a result of non-compliance with the HPTRP in three GOM management areas. Therefore, this scenario would most heavily affect GOM port groups, which include those from Maine to South of Boston. At the regional level, the impact on port group landings varies by port group. The New Hampshire port group, which is estimated to face a 14-percent reduction in landings, and the North of Boston port group, with an expected 6-percent decrease, would feel most of the impacts. Slight landings reductions would also be apparent from South of Cape Cod through New Jersey, due to the creation of the SNE and Mudhole South Management Areas.

Percentage reductions in revenues for these port groups would vary consistent with the percentage reductions seen in landings, with the highest reduction, of 11-percent, for the New Hampshire port group, a 5-percent reduction for the North of Boston port group, and a 1-percent reduction for each of four port groups, including Maine, South of Cape Cod, New York, and New Jersey.

Similar to the Pre-closure scenario, revenues for affected vessels under the GOM-closure scenario vary by vessel size class. For small vessels, revenues are reduced in the range of less than 1 percent to 28 percent (approximately $160 to $26,400), while large vessels' revenues would be reduced by less than 1 percent to 4 percent (approximately $160 to $7,800). At the industry level, approximately 17.5 percent of the gillnet fleet, which equates to 171 vessels, could be affected by the GOM-closure scenario, and most of these vessels would be from GOM port groups. Under this scenario, a decrease of approximately 2 percent (466 mt) in annual landings would be expected, which amounts to a decline of approximately $815,000 in annual revenue.

(3) The SNE-closure scenario would implement two consequence closure areas resulting from non-compliance in the Southern New England Management Area: The Cape Cod South Expansion and Eastern Cape Cod Consequence Closure Areas. In this scenario, the South of Cape Cod port group would be most heavily affected, because 64 percent of landings in this port group are caught in the Cape Cod South Expansion Consequence Closure Area. Reductions in landings for the South of Cape Cod port group could be as high as 6 percent. In addition, closure of the Eastern Cape Cod Consequence Closure Area would affect vessels originating from the East of Cape Cod port group, with an approximately 2 percent reduction in landings. Other affected port groups, from New Hampshire through New Jersey, could expect annual landing reductions of up to approximately 3 percent. Percentage reductions in annual revenues for these port groups vary similarly to the percent reductions seen in landings, with the highest reduction, of 10 percent, in the South of Cape Cod port group.

The range of annual revenue reductions for affected vessels differs for small and large vessels, with expected reductions of 1 to 10 percent (approximately $1,300 to $8,100) for small vessels, and reductions of 1 to 25 percent (approximately $1,500 to $15,300) for large vessels. At the industry level, approximately 21.1 percent of gillnet vessels, or 206 vessels, could be affected, with the largest group being from the South of Cape Cod port group. Under this scenario, a decrease in landings of 2 percent (378 mt) could be expected, totaling approximately $1.2 million decline in annual revenues.

(4) The GOM/SNE-closure scenario would result from non-compliance in both the GOM and SNE areas, and would trigger the closure of all three consequence closure areas. Port groups most heavily affected by this scenario include GOM ports from Maine to South of Boston (resulting from implementation of the Coastal Gulf of Maine Consequence Closure Area) and the South of Cape Cod and East of Cape Cod port groups (resulting from implementation of the Cape Cod South Expansion and Eastern Cape Cod Consequence Closure Areas). The New Hampshire and South of Cape Cod port groups would experience the highest reductions in revenues, with 11 percent (approximately $293,000) and 10 percent (approximately $734,000) declines, respectively. Similar percentage losses in landings for these port groups would also be expected.

As with the scenarios described above, the range of annual revenue reductions for affected vessels differs for small and large vessels. Small vessels are expected to face reductions between 2 to 28 percent (approximately $2,600 to $26,400), while large vessels are expected to have revenue reductions between 1 to 25 percent (approximately $1,500 to $15,300). At the industry level, approximately 29.7 percent of gillnet vessels (290 vessels) could be affected. Under this scenario, a decrease in annual landings of 4 percent (838 mt) can be expected. An approximately $2-million decrease in revenues per year could also occur.

Based on this analysis, the Pre-closure scenario has the least amount of annual impacts of the four proposed action scenarios considered, because no consequence closure areas would be seasonally closed. A cost-effectiveness analysis using a 10-yr time horizon was conducted to examine the temporal differences in the impacts of the scenarios considered. Costs in future years were discounted at a rate of 3 percent and 7 percent (for comparison purposes), because the future dollar

does not have the same value as today's dollar. The discounted annual costs were summed to provide an estimate of the Present Value of Cost (PVC) over the 10-yr time period for both a 3 and 7 percent discount rate. The total PVC does not change over the 10-yr time period for scenarios that are fully implemented in the first year, such as the Pre-closure scenario, if consequence closure areas are never triggered. For the other three scenarios that involve the triggering of consequence closure areas at any point during the 10-yr time period, after the third year of implementation of the final rule, the earlier the closure area is implemented, the higher the total PVC would be over the 10-yr period. This occurs because a closure costs more than pinger requirements, so delaying the onset of a closure lowers the total cost.

Of the four proposed action scenarios examined, using a 3-percent discount rate, the Pre-closure scenario had the lowest PVC across the 10-yr time period: $770,000 for each year, which means that no consequence closure areas are triggered during that time period. When using a 7-percent discount rate, the PVC across the 10-yr time period is even lower, at $674,000 for each year.

For the GOM-closure scenario, if the Coastal Gulf of Maine Consequence Closure Area were triggered in year 3 using a 3-percent discount rate, the PVC would be $5,810,000. However, if it were triggered in year 10, the PVC would be $1,337,000. When using a 7-percent discount rate, triggering the consequence area in year 3 would result in a PVC of $4,801,000, and a value of $1,076,000 if triggered in year 10.

Similarly, for the SNE-closure scenario, implementing the consequence closure areas in year 3 using a 3-percent discount rate would cost $8,558,000, whereas it would cost $1,646,000 if implemented in year 10. When using a 7-percent discount rate, triggering these consequence closure areas in year 3 would cost $7,051,000, and $1,296,000 in year 10.

Finally, for the GOM/SNE-closure scenario, implementing all three consequence areas in year 3 would have a PVC of $13,585,000, whereas the PVC would be $2,211,000 if implemented in year 10. When using a 7-percent discount rate, triggering the three consequence closure areas in year 3 would cost $11,168,000, and $1,697,000 if triggered in year 10.

Therefore, of the four scenarios presented, the Pre-closure scenario is the most cost-effective overall when discounting using both a 3 and 7-percent rate. This demonstrates the necessity for immediate industry compliance with the HPTRP requirements in order to avoid triggering the closure of the consequence closure areas and thus higher costs. If any or all of the consequence closure areas are triggered, it is more cost-effective if they are triggered later in the 10-yr time period rather than sooner, under both the 3 and 7-percent discount rate scenarios.

The Alternative 4 Pre-closure scenario is estimated to result in a 59-percent reduction in harbor porpoise bycatch, while the Alternative 4 SNE-closure scenario is estimated to result in a 60-percent reduction. The GOM-closure scenario and the GOM/SNE-closure scenario demonstrated a similar estimated reduction in harbor porpoise bycatch of 63 percent. The GOM/SNE-closure scenario showed a slightly higher decline in the number of animals taken at 671, with a total estimated bycatch for this alternative scenario of 392 animals. This alternative is estimated to cost the commercial fishing industry $108 (7-percent discount rate) or $124 (3-percent discount rate) per harbor porpoise saved in the pre-consequence closure scenario, and $729 (7-percent discount rate) or $882 (3-percent discount rate) per harbor porpoise saved in the consequence closure scenario if triggered in Year 3.

Based on these analyses, Alternative 4 is the preferred alternative because it will achieve the goals of the MMPA while minimizing the overall economic impact to the affected fisheries.

Under Alternative 5, NMFS would implement a modified version of Alternative 4, the preferred alternative. Alternative 5 would remove the Offshore Management Area, remove the large mesh gillnet closure period in the Southern Mid-Atlantic Management Area (February 15 through March 15), and codify the Northeast Multispecies Western Gulf of Maine Closure Area under the HPTRP. Note that this analysis examines two rather than four scenarios for Alternative 5: Pre-closure and GOM/SNE closure. The Alternative 5 Pre-closure scenario is estimated to reduce harbor porpoise bycatch by 59 percent, and the GOM/SNE-closure scenario is estimated to reduce harbor porpoise bycatch by 63 percent. The decline in revenues for the commercial gillnet industry for this alternative are estimated to be less than 1 percent ($127,000) in the pre-consequence closure scenario, and 5 percent ($1,901,000) in the Alternative 5 GOM/SNE closure scenario. These costs are comparatively similar to those incurred under the Pre-closure and GOM/SNE closure scenarios in Alternative 4. However, when considering the range of harbor porpoise bycatch levels that could be expected under each Alternative, Alternative 5 results in a higher maximum bycatch level (i.e., closer to PBR) than all the scenarios considered under Alternative 4. In considering this alternative, NMFS also concluded that the removal of existing HPTRP management areas while harbor porpoise bycatch levels remain above PBR was not warranted. Based on these analyses, NMFS rejected this alternative.

In summary, Alternative 4 will best allow NMFS to achieve its mandates under the MMPA. This action will implement modifications to the HPTRP that will reduce harbor porpoise takes to below the stock's PBR level, while also minimizing the overall impact to affected gillnet fisheries. Impacts will remain low so long as compliance with the pinger requirements in New England does not trigger the implementation of consequence closure areas in the future.

NMFS has determined that this action is consistent to the maximum extent practicable with the approved coastal management programs of Maine, New Hampshire, Massachusetts, Rhode Island, Connecticut, New York, New Jersey, Delaware, Maryland, Virginia, and North Carolina. This determination was submitted for review by the responsible state agencies under section 307 of the Coastal Zone Management Act. The following states submitted responses concurring with NMFS' determination: New Hampshire, Rhode Island, Connecticut, New Jersey, Delaware, Virginia, and North Carolina. Maine, Massachusetts, New York, and Maryland did not respond; therefore, consistency is inferred.

This action contains policies with federalism implications that were sufficient to warrant preparation of a federalism assessment under Executive Order 13132. Accordingly, the Assistant Secretary for Legislative and Intergovernmental Affairs provided notice of the action to the appropriate officials in the states of Maine, New Hampshire, Massachusetts, Rhode Island, Connecticut, New York, New Jersey, Delaware, Maryland, Virginia, and North Carolina.

If a member of the public requests a scientific research permit for conducting research with fishing gear within a HPTRP management area, an existing information collection requirement, approved under OMB Control No. 0648–0084, would apply. The public reporting burden for completing an application for a scientific research permit is estimated to average 32 hr per response, including the time for reviewing instructions, searching existing data

sources, gathering and maintaining the data needed, and completing and reviewing the collection of information. Notwithstanding any other provision of the law, no person is required to respond to, nor shall any person be subject to a penalty for failure to comply with, a collection of information subject to the requirements of the Paperwork Reduction Act, unless that collection of information displays a currently valid OMB Control Number.

NMFS conducted a section 7 consultation on this action pursuant to the Endangered Species Act (ESA), which was concluded on November 19, 2008. Because this action will not have effects on listed species that were not previously considered during the informal consultation on the initial HPTRP (concluded on November 12, 1998), reinitiating consultation on this action is not warranted.

The Small Business Regulatory Enforcement Fairness Act of 1996 states that, for each rule or group of related rules for which an agency is required to prepare a FRFA, the agency shall publish one or more guides to assist small entities in complying with the rule, and shall designate such publications as "small entity compliance guides." The agency shall explain the actions a small entity is required to take to comply with a rule or a group of rules. As part of this rulemaking process, NMFS will send a letter to state and Federal gillnet permit holders in the states of Maine through North Carolina, which letters will serve as the small entity compliance guide. In addition, copies of this final rule and compliance guide (i.e., permit holder letter) are available from NMFS (see **ADDRESSES**) as well as the HPTRP Web site: *http://www.nero.noaa.gov/hptrp.*

References

Palka, D., M. Rossman, A. VanAtten, and C. Orphanides. 2008. Effect of Pingers on Harbor Porpoise and Seal Bycatch in the US Northeast Gillnet Fishery. Paper SC/60/SM2 presented to the Scientific Committee, June 2008 (unpublished); 27pp. Paper available from the IWC Secretariat: *secretariat@iwcoffice.org.*

Waring, G.T., E. Josephson, C.P. Fairfield-Walsh, and K. Maze-Foley (ed). 2009. U.S. Atlantic and Gulf of Mexico Marine Mammal Stock Assessments—2008. NOAA Tech Memo NMFS–NE–210; 440 p.

List of Subjects in 50 CFR Part 229

Administrative practice and procedure, Confidential business information, Fisheries, Marine mammals, Reporting and recordkeeping requirements.

Dated: February 5, 2010.

James W. Balsiger,

Acting Assistant Administrator for Fisheries, National Marine Fisheries Service.

■ For the reasons stated in the preamble, 50 CFR part 229 is amended as follows:

PART 229—AUTHORIZATION FOR COMMERCIAL FISHERIES UNDER THE MARINE MAMMAL PROTECTION ACT OF 1972

■ 1. The authority citation for 50 CFR part 229 continues to read as follows:

Authority: 16 U.S.C. 1361 *et seq.*

■ 2. In § 229.2, the definitions of "Mudhole", "Southern Mid-Atlantic waters", and "Waters off New Jersey" are removed.

■ 3. In § 229.3, paragraphs (q) and (r) are removed and reserved, and paragraphs (m), (n), (o), and (p) are revised to read as follows:

§ 229.3 Prohibitions.

* * * * *

(m) It is prohibited to fish with, set, haul back, possess on board a vessel unless stowed in accordance with § 229.2, or fail to remove sink gillnet gear or gillnet gear capable of catching multispecies from the areas and for the times specified in § 229.33(a)(1), (a)(3), (a)(6), and (a)(8). This prohibition also applies to areas where pingers are required, unless the vessel owner or operator complies with the pinger provisions specified in § 229.33 (a)(2) through (a)(5) and (a)(7). This prohibition does not apply to vessels fishing with a single pelagic gillnet (as described and used as set forth in § 648.81(f)(2)(ii) of this title).

(n) It is prohibited to fish with, set, haul back, possess on board a vessel unless stowed in accordance with § 229.2, or fail to remove gillnet gear from the areas and for the times as specified in § 229.34 (b)(1)(i), (b)(2)(i), (b)(3)(i), or (b)(4)(i).

(o) It is prohibited to fish with, set, haul back, possess on board a vessel unless stowed in accordance with § 229.2, or fail to remove any large mesh or small mesh gillnet gear from the areas and for the times specified in § 229.34(b) unless the gear complies with the specified gear restrictions set forth in the provisions of paragraphs (b)(1)(ii) or (iii), (b)(2)(ii) or (iii), (b)(3)(ii) or (iii), or (b)(4)(ii) or (iii) of § 229.34.

(p) It is prohibited to fish with, set, haul back, possess on board a vessel unless stowed in accordance with § 229.2, or fail to remove sink gillnet gear or gillnet gear capable of catching multispecies in areas where pingers are required, as specified under § 229.33 (a)(2) through (a)(5) and (a)(7), unless the operator on board the vessel during fishing operations possesses and retains on board the vessel a valid pinger training authorization issued by NMFS as specified under § 229.33(c).

* * * * *

■ 4. Section 229.33 is revised to read as follows:

§ 229.33 Harbor Porpoise Take Reduction Plan Regulations—New England.

(a) *Restrictions*—(1) *Northeast Closure Area*—(i) *Area restrictions.* From August 15 through September 13, it is prohibited to fish with, set, haul back, possess on board a vessel unless stowed in accordance with § 229.2, or fail to remove sink gillnet gear or gillnet gear capable of catching multispecies from the Northeast Closure Area. This restriction does not apply to vessels fishing with a single pelagic gillnet (as described and used as set forth in § 648.81(f)(2)(ii) of this title).

(ii) *Area boundaries.* The Northeast Closure Area is bounded by straight lines connecting the following points in the order stated:

NORTHEAST CLOSURE AREA

Point	N. Lat.	W. Long.
NE1	44°27.3′	68°55.0′ (ME shoreline)
NE2	43°29.6′	68°55.0′
NE3	44°04.4′	67°48.7′
NE4	44°06.9′	67°52.8′
NE5	44°31.2′	67°02.7′
NE6	44°45.8′	67°02.7′ (ME shoreline)

(2) *Mid-Coast Management Area*—(i) *Area restrictions.* From September 15 through May 31, it is prohibited to fish with, set, haul back, possess on board a vessel unless stowed in accordance with § 229.2, or fail to remove sink gillnet gear or gillnet gear capable of catching multispecies from the Mid-Coast Management Area, unless the gillnet gear is equipped with pingers in accordance with paragraphs (b) and (c) of this section. This prohibition does not apply to vessels fishing with a single pelagic gillnet (as described and used as set forth in § 648.81(f)(2)(ii) of this title).

(ii) *Area boundaries.* The Mid-Coast Management Area is the area bounded by straight lines connecting the following points in the order stated:

MID-COAST MANAGEMENT AREA

Point	N. Lat.	W. Long.
MC1	42°30.0′	70°50.1′ (MA shoreline)

MID-COAST MANAGEMENT AREA—Continued

Point	N. Lat.	W. Long.
MC2	42°30.0′	70°15.0′
MC3	42°40.0′	70°15.0′
MC4	42°40.0′	70°00.0′
MC5	43°00.0′	70°00.0′
MC6	43°00.0′	69°30.0′
MC7	43°30.0′	69°30.0′
MC8	43°30.0′	69°00.0′
MC9	44°17.8′	69°00.0′ (ME shoreline)

(iii) *Closing procedures.* According to paragraphs (d)(1), (d)(3), and (d)(4) of this section, NMFS shall close the western portion of the Mid-Coast Management Area (west of 70°15′ W. long.) from October 1 through November 30 annually by incorporating it into the Coastal Gulf of Maine Closure Area if, after two full, consecutive management seasons, the average observed bycatch rate of harbor porpoises for the Mid-Coast, Massachusetts Bay, and Stellwagen Bank Management Areas combined exceeds the target harbor porpoise bycatch rate of 0.031 harbor porpoises per metric tons of landings.

(3) *Massachusetts Bay Management Area*—(i) *Area restrictions.* From November 1 through February 28/29 and from April 1 through May 31, it is prohibited to fish with, set, haul back, possess on board a vessel unless stowed in accordance with § 229.2, or fail to remove sink gillnet gear or gillnet gear capable of catching multispecies from the Massachusetts Bay Management Area, unless the gillnet gear is equipped with pingers in accordance with paragraphs (b) and (c) of this section. From March 1 through March 31, it is prohibited to fish with, set, haul back, possess on board a vessel unless stowed in accordance with § 229.2, or fail to remove sink gillnet gear or gillnet gear capable of catching multispecies from the Massachusetts Bay Management Area. These restrictions do not apply to vessels fishing with a single pelagic gillnet (as described in § 648.81(f)(2)(ii) of this title).

(ii) *Area boundaries.* The Massachusetts Bay Management Area is bounded by straight lines connecting the following points in the order stated:

MASSACHUSETTS BAY MANAGEMENT AREA

Point	N. Lat.	W. Long.
MB1	42°30.0′	70°50.1′ (MA shoreline)
MB2	42°30.0′	70°30.0′
MB3	42°15.0′	70°30.0′
MB4	42°15.0′	70°00.0′

MASSACHUSETTS BAY MANAGEMENT AREA—Continued

Point	N. Lat.	W. Long.
MB5	42°00.0′	70°00.0′
MB6	42°00.0′	70°01.2′ (MA shoreline)
MB7	42°00.0′	70°04.8′ (MA shoreline)
MB8	42°00.0′	70°42.2′ (MA shoreline)

(iii) *Closing procedures.* According to paragraphs (d)(1), (d)(3), and (d)(4) of this section, NMFS shall close a portion of the Massachusetts Bay Management Area (north of 42°15′ N. lat.) from October 1 through November 30 annually by incorporating it into the Coastal Gulf of Maine Closure Area if, after two full, consecutive management seasons, the average observed bycatch rate of harbor porpoises for the Massachusetts Bay, Mid-Coast, and Stellwagen Bank Management Areas combined exceeds the target harbor porpoise bycatch rate of 0.031 harbor porpoises per metric tons of landings.

(4) *Stellwagen Bank Management Area*—(i) *Area restrictions.* From November 1 through May 31, it is prohibited to fish with, set, haul back, possess on board a vessel unless stowed in accordance with § 229.2, or fail to remove sink gillnet gear or gillnet gear capable of catching multispecies from the Stellwagen Bank Management Area, unless the gillnet gear is equipped with pingers in accordance with paragraphs (b) and (c) of this section. This restriction does not apply to vessels fishing with a single pelagic gillnet (as described in § 648.81(f)(2)(ii) of this title).

(ii) *Area boundaries.* The Stellwagen Bank Management Area is bounded by straight lines connecting the following points in the order stated:

STELLWAGEN BANK MANAGEMENT AREA

Point	N. Lat.	W. Long.
SB1	42°30.0′	70°30.0′
SB2	42°30.0′	70°15.0′
SB3	42°15.0′	70°15.0′
SB4	42°15.0′	70°30.0′
SB1	42°30.0′	70°30.0′

(iii) *Closing procedures.* According to paragraphs (d)(1), (d)(3), and (d)(4) of this section, NMFS shall close the Stellwagen Bank Management Area from October 1 through November 30 annually by incorporating it into the Coastal Gulf of Maine Closure Area if, after two full, consecutive management seasons, the average observed bycatch rate of harbor porpoises for the Stellwagen Bank, Mid-Coast, and Massachusetts Bay Management Areas combined exceeds the target harbor porpoise bycatch rate of 0.031 harbor porpoises per metric tons of landings.

(5) *Southern New England Management Area*—(i) *Area restrictions.* From December 1 through May 31, it is prohibited to fish with, set, haul back, possess on board a vessel unless stowed in accordance with § 229.2, or fail to remove sink gillnet gear or gillnet gear capable of catching multispecies from the Southern New England Management Area, unless the gillnet gear is equipped with pingers in accordance with paragraphs (b) and (c) of this section. This prohibition does not apply to vessels fishing with a single pelagic gillnet (as described in § 648.81(f)(2)(ii) of this title).

(ii) *Area boundaries.* The Southern New England Management Area is bounded by straight lines connecting the following points in the order stated:

SOUTHERN NEW ENGLAND MANAGEMENT AREA

Point	N. Lat.	W. Long.
SNE1	Western boundary as specified [1].	
SNE2	40°00.0′	72°30.0′
SNE3	40°00.0′	69°30.0′
SNE4	42°15.0′	69°30.0′
SNE5	42°15.0′	70°00.0′
SNE6	41°58.3′	70°00.0′ (MA shoreline)

[1] Bounded on the west by a line running from the Rhode Island shoreline at 41°18.2′ N. lat. and 71°51.5′ W. long. (Watch Hill, RI), southwesterly through Fishers Island, NY, to Race Point, Fishers Island, NY; and from Race Point, Fishers Island, NY; southeasterly to the intersection of the 3-nautical mile line east of Montauk Point; southwesterly along the 3-nautical mile line to the intersection of 72°30.0′ W. long.

(iii) *Closing procedures.* According to paragraphs (d)(2), (d)(3), and (d)(4) of this section, NMFS shall close two areas (Cape Cod South Expansion Closure Area and Eastern Cape Cod Closure Area) within the Southern New England Management Area from February 1 through April 30 annually if, after two full, consecutive management seasons, the average observed bycatch rate of harbor porpoises for the Southern New England Management Area exceeds the target harbor porpoise bycatch rate of 0.023 harbor porpoises per metric tons of landings.

(6) *Cape Cod South Closure Area*—(i) *Area restrictions.* From March 1 through March 31, it is prohibited to fish with, set, haul back, possess on board a vessel unless stowed in accordance with

§ 229.2, or fail to remove sink gillnet gear or gillnet gear capable of catching multispecies from the Cape Cod South Closure Area. This prohibition does not apply to vessels fishing with a single pelagic gillnet (as described in § 648.81(f)(2)(ii) of this title).

(ii) *Area boundaries.* The Cape Cod South Closure Area is bounded by straight lines connecting the following points in the order stated:

CAPE COD SOUTH CLOSURE AREA

Point	N. Lat.	W. Long.
CCS1	41°19.6′	71°45.0′ (RI shoreline)
CCS2	40°40.0′	71°45.0′
CCS3	40°40.0′	70°30.0′
CCS4	41°20.9′	70°30.0′
CCS5	41°23.1′	70°30.0′
CCS6	41°33.1′	70°30.0′ (MA shoreline)

(iii) *Closing procedures.* According to paragraphs (d)(2), (d)(3), and (d)(4) of this section, NMFS shall close the Cape Cod South Closure Area and an area to its south (Cape Cod South Expansion Closure Area) from February 1 through April 30 annually if, after two full, consecutive management seasons, the average observed bycatch rate of harbor porpoises for the Southern New England Management Area exceeds the target harbor porpoise bycatch rate of 0.023 harbor porpoises per metric tons of landings.

(7) *Offshore Management Area*—(i) *Area restrictions.* From November 1 through May 31, it is prohibited to fish with, set, haul back, possess on board a vessel unless stowed in accordance with § 229.2, or fail to remove sink gillnet gear or gillnet gear capable of catching multispecies from the Offshore Management Area, unless the gillnet gear is equipped with pingers in accordance with paragraphs (b) and (c) of this section. This restriction does not apply to vessels fishing with a single pelagic gillnet (as described in § 648.81(f)(2)(ii) of this title).

(ii) *Area boundaries.* The Offshore Management Area is bounded by straight lines connecting the following points in the order stated:

OFFSHORE MANAGEMENT AREA

Point	N. Lat.	W. Long.
OFS1	42°50.0′	69°30.0′
OFS2	43°10.0′	69°10.0′
OFS3	43°10.0′	67°40.0′
OFS4	43°05.8′	67°40.0′ (EEZ boundary)
OFS5	42°53.1′	67°44.5′ (EEZ boundary)

OFFSHORE MANAGEMENT AREA—Continued

Point	N. Lat.	W. Long.
OFS6	42°47.3′	67°40.0′ (EEZ boundary)
OFS7	42°10.0′	67°40.0′
OFS8	42°10.0′	69°30.0′
OFS1	42°50.0′	69°30.0′

(8) *Cashes Ledge Closure Area*—(i) *Area restrictions.* During the month of February, it is prohibited to fish with, set, haul back, possess on board a vessel unless stowed in accordance with § 229.2, or fail to remove sink gillnet gear or gillnet gear capable of catching multispecies from the Cashes Ledge Closure Area. This restriction does not apply to vessels fishing with a single pelagic gillnet (as described in § 648.81(f)(2)(ii) of this title).

(ii) *Area boundaries.* The Cashes Ledge Closure Area is bounded by straight lines connecting the following points in the order stated:

CASHES LEDGE CLOSURE AREA

Point	N. Lat.	W. Long.
CL1	42°30.0′	69°00.0′
CL2	42°30.0′	68°30.0′
CL3	43°00.0′	68°30.0′
CL4	43°00.0′	69°00.0′
CL1	42°30.0′	69°00.0′

(b) *Pingers*—(1) *Pinger specifications.* For the purposes of this subpart, a pinger is an acoustic deterrent device which, when immersed in water, broadcasts a 10 kHz (plus or minus 2 kHz) sound at 132 dB (plus or minus 4 dB) re 1 micropascal at 1 m, lasting 300 milliseconds (plus or minus 15 milliseconds), and repeating every 4 seconds (plus or minus 0.2 seconds).

(2) *Pinger attachment.* An operating and functional pinger must be attached at each end of a string of gillnets and at the bridle of every net, or every 300 feet (91.4 m or 50 fathoms), whichever is closer.

(c) *Pinger training and authorization.* The operator of a vessel may not fish with, set, haul back, possess on board a vessel unless stowed in accordance with § 229.2, or fail to remove sink gillnet gear or gillnet gear capable of catching multispecies in closed areas where pingers are required as specified under paragraph (b) of this section, unless the operator has satisfactorily received pinger training and possesses and retains on board the vessel a valid pinger training authorization issued by NMFS.

(d) *Annual review for consequence area actions*—(1) *Coastal Gulf of Maine Closure Area*—(i) *Establishment.* If, after two full, consecutive management seasons, the calculated average observed bycatch rate of the Mid-Coast, Massachusetts Bay, and Stellwagen Bank Management Areas exceeds the target bycatch rate of 0.031 harbor porpoises per metric tons of landings, the Coastal Gulf of Maine Closure Area shall be established.

(ii) *Restrictions.* From October 1 through November 30, it will be prohibited to fish with, set, haul back, possess on board a vessel unless stowed in accordance with § 229.2, or fail to remove sink gillnet gear or gillnet gear capable of catching multispecies from the Coastal Gulf of Maine Closure Area. This prohibition will not apply to vessels fishing with a single pelagic gillnet (as described in § 648.81(f)(2)(ii) of this title). When the area is open to fishing, the requirements of the Mid-Coast (as described in paragraph (a)(2) of this section), Massachusetts Bay (as described in paragraph (a)(3) of this section), and Stellwagen Bank (as described in paragraph (a)(4) of this section) Management Areas will remain in effect.

(iii) *Area boundaries.* The Coastal Gulf of Maine Closure Area is bounded by straight lines connecting the following points in the order stated:

COASTAL GULF OF MAINE CLOSURE AREA

Point	N. Lat.	W. Long.
CGM1	43°33.0′	70°15.0′ (ME shoreline)
CGM2	42°15.0′	70°15.0′
CGM3	42°15.0′	70°46.0′ (MA shoreline)

(2) *Cape Cod South Expansion and Eastern Cape Cod Closure Areas*—(i) *Establishment.* If, after two full, consecutive management seasons, the calculated average observed bycatch rate of the Southern New England Management Area exceeds the target bycatch rate of 0.023 harbor porpoises per metric tons of landings, the Cape Cod South Expansion Closure Area and the Eastern Cape Cod Closure Area shall be established.

(ii) *Restrictions.* From February 1 through April 30, it will be prohibited to fish with, set, haul back, possess on board a vessel unless stowed in accordance with § 229.2, or fail to remove sink gillnet gear or gillnet gear capable of catching multispecies from the Cape Cod South Expansion Closure Area and the Eastern Cape Cod Closure Area. This prohibition will not apply to vessels fishing with a single pelagic

gillnet (as described in § 648.81(f)(2)(ii) of this title). When the areas are open to fishing, the requirements of the Southern New England Management Area, as described in paragraph (a)(5) of this section, will remain in effect.

(iii) *Area boundaries.* (A) The Cape Cod South Expansion Closure Area is bounded by straight lines connecting the following points in the order stated:

CAPE COD SOUTH EXPANSION CLOSURE AREA

Point	N. Lat.	W. Long.
CCSE1	41°19.6′	71°45.0′ (RI shoreline)
CCSE2	40°00.0′	71°45.0′
CCSE3	40°00.0′	70°00.0′
CCSE4	40°30.0′	70°00.0′
CCSE5	40°30.0′	70°30.0′
CCSE6	41°20.9′	70°30.0′
CCSE7	41°23.1′	70°30.0′
CCSE8	41°33.1′	70°30.0′ (MA shoreline)

(B) The Eastern Cape Cod Closure Area is bounded by straight lines connecting the following points in the order stated:

EASTERN CAPE COD CLOSURE AREA

Point	N. Lat.	W. Long.
ECC1	41°58.3′	70°00.0′ (MA shoreline)
ECC2	42°15.0′	70°00.0′
ECC3	42°15.0′	69°30.0′
ECC4	41°40.0′	69°30.0′
ECC5	41°40.0′	69°56.8′ (MA shoreline)

(3) *Notification.* Upon determining that establishing a consequence closure area as described in paragraphs (d)(1) and (d)(2) of this section is necessary, NMFS will notify, in advance of the closure, the Harbor Porpoise Take Reduction Team and gillnet permit holders through mail notification. NMFS will also publish notification in the **Federal Register** and post information on the Harbor Porpoise Take Reduction Plan Web site related to the establishment of the closure area(s).

(4) If any or all of the closure areas discussed in paragraphs (d)(1) and (d)(2) are implemented, NMFS will monitor harbor porpoise bycatch rates throughout the New England region. The provisions set forth in paragraphs (d)(1) and (d)(2) shall remain in effect each year after implementation until bycatch levels approach a zero mortality and serious injury rate (ZMRG), or until NMFS, in collaboration with the Harbor Porpoise Take Reduction Team, develops and implements new measures.

(e) *Research permits.* An exemption to the requirements set forth in this section may be acquired for the purposes of conducting scientific or gear research within the restricted areas described in this section. A scientific research permit must be acquired through NMFS's existing permit application process, administered by NMFS.

(f) *Other special measures.* The Assistant Administrator may revise the requirements of this section through notification published in the **Federal Register** if:

(1) NMFS determines that pinger operating effectiveness in the commercial gillnet fishery is inadequate to reduce bycatch below the stock's PBR level; or

(2) NMFS determines that the boundary or timing of a closed area is inappropriate, or that gear modifications (including pingers) are not reducing bycatch to below the PBR level.

■ 5. Section 229.34 is revised to read as follows:

§ 229.34 Harbor Porpoise Take Reduction Plan Regulations—Mid-Atlantic.

(a)(1) *Regulated waters.* The regulations in this section apply to all waters in the Mid-Atlantic bounded on the east by 72°30′ W. long. at the southern coast of Long Island, NY at 40°50.1′ N. lat. and on the south by the NC/SC border (33°51.1′ N. lat.), except for the areas exempted in paragraph (a)(2) of this section.

(2) *Exempted waters.* The regulations within this section are not applicable to waters landward of the first bridge over any embayment, harbor, or inlet, or to waters landward of the following lines:

New York

40°45.70′ N., 72°45.15′ W. to 40°45.72′ N., 72°45.30′ W. (Moriches Bay Inlet)

40°37.32′ N., 73°18.40′ W. to 40°38.00′ N., 73°18.56′ W. (Fire Island Inlet)

40°34.40′ N., 73°34.55′ W. to 40°35.08′ N., 73°35.22′ W. (Jones Inlet)

New Jersey/Delaware

39°45.90′ N., 74°05.90′ W. to 39°45.15′ N., 74°06.20′ W. (Barnegat Inlet)

39°30.70′ N., 74°16.70′ W. to 39°26.30′ N., 74°19.75′ W. (Beach Haven to Brigantine Inlet)

38°56.20′ N., 74°51.70′ W. to 38°56.20′ N., 74°51.90′ W. (Cape May Inlet)

All marine and tidal waters landward of the 72 COLREGS demarcation line (International Regulations for Preventing Collisions at Sea, 1972), as depicted or noted on nautical charts published by NOAA (Coast Charts 1:80,000 scale), and as described in 33 CFR part 80. (Delaware Bay)

Maryland/Virginia

38°19.48′ N., 75°05.10′ W. to 38°19.35′ N., 75°05.25′ W. (Ocean City Inlet)

All marine and tidal waters landward of the 72 COLREGS demarcation line (International Regulations for Preventing Collisions at Sea, 1972), as depicted or noted on nautical charts published by NOAA (Coast Charts 1:80,000 scale), and as described in 33 CFR part 80. (Chincoteague to Ship Shoal Inlet)

37°11.10′ N., 75°49.30′ W. to 37°10.65′ N., 75°49.60′ W. (Little Inlet)

37°07.00′ N., 75°53.75′ W. to 37°05.30′ N., 75°56.′ W. (Smith Island Inlet)

North Carolina

All marine and tidal waters landward of the 72 COLREGS demarcation line (International Regulations for Preventing Collisions at Sea, 1972), as depicted or noted on nautical charts published by NOAA (Coast Charts 1:80,000 scale), and as described in 33 CFR part 80.

(b) *Restrictions*—(1) *Waters off New Jersey Management Area.* The Waters off New Jersey Management Area is bounded by straight lines connecting the following points in the order stated:

WATERS OFF NEW JERSEY MANAGEMENT AREA

Point	N. Lat.	W. Long.
WNJ1	40°50.1′	72°30.0′ (NY shoreline)
WNJ2	38°47.0′	72°30.0′
WNJ3	38°47.0′	75°05.0′ (DE shoreline)

(i) *Closure.* From April 1 through April 20, it is prohibited to fish with, set, haul back, possess on board a vessel unless stowed in accordance with § 229.2, or fail to remove any large mesh gillnet gear from the Waters off New Jersey Management Area.

(ii) *Gear limitations and requirements—large mesh gillnet gear.* From January 1 through April 30, except during April 1 through April 20, as described in paragraph (b)(1)(i) of this section, no person may fish with, set, haul back, possess on board a vessel unless stowed in accordance with § 229.2, or fail to remove any large mesh gillnet gear in the Waters off New Jersey Management Area, unless the gear complies with the specified gear characteristics described in paragraphs (b)(1)(ii)(A) through (F) of this section. During this period, no vessel may enter or remain in the Waters off New Jersey Management Area with large mesh gillnet gear on board, unless the gear complies with the specified gear characteristics described in paragraphs (b)(1)(ii)(A) through (F) of this section,

or is stowed in accordance with § 229.2. In order to comply with these specified gear characteristics, the gear must have all the following characteristics:

(A) *Floatline length.* The floatline is not more than 4,800 ft (1,463.0 m).

(B) *Twine size.* The twine is at least 0.035 inches (0.90 mm) in diameter.

(C) *Size of nets.* Individual nets or net panels are not more than 300 ft (91.44 m or 50 fathoms) in length.

(D) *Number of nets.* The total number of individual nets or net panels for a vessel, including all nets on board the vessel, hauled by the vessel, or deployed by the vessel, does not exceed 80.

(E) *Number of nets per string.* The total number of nets or net panels in a net string does not exceed 16.

(F) *Tie-down system.* The gillnet gear is equipped with tie-downs spaced not more than 24 ft (7.3 m) apart along the floatline, and each tie-down is not more than 48 inches (18.90 cm) in length from the point where it connects to the floatline to the point where it connects to the lead line.

(iii) *Gear limitations and requirements—small mesh gillnet gear.* From January 1 through April 30, no person may fish with, set, haul back, possess on board a vessel unless stowed in accordance with § 229.2, or fail to remove any small mesh gillnet gear in the Waters off New Jersey Management Area unless the gear complies with the specified gear characteristics described in paragraphs (b)(1)(iii)(A) through (F) of this section. During this period, no vessel may enter or remain in the Waters off New Jersey Management Area with small mesh gillnet gear on board, unless the gear complies with the specified gear characteristics described in paragraphs (b)(1)(iii)(A) through (F) of this section, or is stowed in accordance with § 229.2. In order to comply with these specified gear characteristics, the gear must have all the following characteristics:

(A) *Floatline length.* The floatline is not more than 3,000 ft (914.4 m) in length.

(B) *Twine size.* The twine is at least 0.031 inches (0.81 mm) in diameter.

(C) *Size of nets.* Individual nets or net panels are not more than 300 ft (91.4 m or 50 fathoms) in length.

(D) *Number of nets.* The total number of individual nets or net panels for a vessel, including all nets on board the vessel, hauled by the vessel or deployed by the vessel, does not exceed 45.

(E) *Number of nets per string.* The total number of nets or net panels in a net string does not exceed 10.

(F) *Tie-down system.* Tie-downs are prohibited.

(2) *Mudhole North Management Area.* The Mudhole North Management Area is bounded by straight lines connecting the following points in the order stated:

MUDHOLE NORTH MANAGEMENT AREA

Point	N. Lat.	W. Long.
MN1	40°28.1′	74°00.0′ (NJ shoreline)
MN2	40°30.0′	74°00.0′
MN3	40°30.0′	73°20.0′
MN4	40°05.0′	73°20.0′
MN5	40°05.0′	74°02.0′ (NJ shoreline)

(i) *Closures.* From February 15 through March 15, it is prohibited to fish with, set, haul back, possess on board a vessel unless stowed in accordance with § 229.2, or fail to remove any large or small mesh gillnet gear from the Mudhole North Management Area. In addition, from April 1 through April 20, it is prohibited to fish with, set, haul back, possess on board a vessel unless stowed in accordance with § 229.2, or fail to remove any large mesh gillnet gear from the Mudhole North Management Area.

(ii) *Gear limitations and requirements—large mesh gillnet gear.* From January 1 through April 30, except during February 15 through March 15 and April 1 through April 20 as described in paragraph (b)(2)(i) of this section, no person may fish with, set, haul back, possess on board a vessel unless stowed in accordance with § 229.2, or fail to remove any large mesh gillnet gear in the Mudhole North Management Area unless the gear complies with the specified gear characteristics described in paragraphs (b)(2)(ii)(A) through (F) of this section. During this period, no vessel may enter or remain in the Mudhole North Management Area with large mesh gillnet gear on board, unless the gear complies with the specified gear characteristics described in paragraphs (b)(2)(ii)(A) through (F) of this section, or is stowed in accordance with § 229.2. In order to comply with these specified gear characteristics, the gear must have all the following characteristics:

(A) *Floatline length.* The floatline is not more than 3,900 ft (1,188.7 m).

(B) *Twine size.* The twine is at least 0.035 inches (0.90 mm) in diameter.

(C) *Size of nets.* Individual nets or net panels are not more than 300 ft (91.44 m or 50 fathoms) in length.

(D) *Number of nets.* The total number of individual nets or net panels for a vessel, including all nets on board the vessel, hauled by the vessel or deployed by the vessel, does not exceed 80.

(E) *Number of nets per string.* The total number of nets or net panels in a net string does not exceed 13.

(F) *Tie-down system.* The gillnet gear is equipped with tie-downs spaced not more than 24 ft (7.3 m) apart along the floatline, and each tie-down is not more than 48 inches (18.90 cm) in length from the point where it connects to the floatline to the point where it connects to the lead line.

(iii) *Gear limitations and requirements—small mesh gillnet gear.* From January 1 through April 30, except during February 15 through March 15 as described in paragraph (b)(2)(i) of this section, no person may fish with, set, haul back, possess on board a vessel unless stowed in accordance with § 229.2, or fail to remove any small mesh gillnet gear in the Mudhole North Management Area unless the gear complies with the specified gear characteristics described in paragraphs (b)(2)(iii)(A) through (F) of this section. During this period, no vessel may enter or remain in the Mudhole North Management Area with small mesh gillnet gear on board unless the gear complies with the specified gear characteristics described in paragraphs (b)(2)(iii)(A) through (F) of this section, or is stowed in accordance with § 229.2. In order to comply with these specified gear characteristics, the gear must have all the following characteristics:

(A) *Floatline length.* The floatline is not more than 3,000 ft (914.4 m) in length.

(B) *Twine size.* The twine is at least 0.031 inches (0.81 mm) in diameter.

(C) *Size of nets.* Individual nets or net panels are not more than 300 ft (91.4 m or 50 fathoms) in length.

(D) *Number of nets.* The total number of individual nets or net panels for a vessel, including all nets on board the vessel, hauled by the vessel or deployed by the vessel, does not exceed 45.

(E) *Number of nets per string.* The total number of nets or net panels in a net string does not exceed 10.

(F) *Tie-down system.* Tie-downs are prohibited.

(3) *Mudhole South Management Area.* The Mudhole South Management Area is bounded by straight lines connecting the following points in the order stated:

MUDHOLE SOUTH MANAGEMENT AREA

Point	N. Lat.	W. Long.
MS1	40°05.0′	73°31.0′
MS2	40°05.0′	73°00.0′
MS3	39°51.0′	73°00.0′
MS4	39°51.0′	73°31.0′
MS1	40°05.0′	73°31.0′

(i) *Closures.* From February 1 through March 15, it is prohibited to fish with, set, haul back, possess on board a vessel unless stowed in accordance with § 229.2, or fail to remove any large or small mesh gillnet gear in the Mudhole South Management Area. In addition, from April 1 through April 20, it is prohibited to fish with, set, haul back, possess on board a vessel unless stowed in accordance with § 229.2, or fail to remove any large mesh gillnet gear from the Mudhole South Management Area.

(ii) *Gear limitations and requirements—large mesh gillnet gear.* From January 1 through April 30, except during February 1 through March 15 and April 1 through April 20 as described in paragraph (b)(3)(i) of this section, no person may fish with, set, haul back, possess on board a vessel unless stowed in accordance with § 229.2, or fail to remove any large mesh gillnet gear in the Mudhole South Management Area unless the gear complies with the specified gear characteristics described in paragraphs (b)(3)(ii)(A) through (F) of this section. During this period, no vessel may enter or remain in the Mudhole South Management Area with large mesh gillnet gear on board, unless the gear complies with the specified gear characteristics described in paragraphs (b)(3)(ii)(A) through (F) of this section, or is stowed in accordance with § 229.2. In order to comply with these specified gear characteristics, the gear must have all the following characteristics:

(A) *Floatline length.* The floatline is not more than 3,900 ft (1,188.7 m).

(B) *Twine size.* The twine is at least 0.035 inches (0.90 mm) in diameter.

(C) *Size of nets.* Individual nets or net panels are not more than 300 ft (91.44 m or 50 fathoms) in length.

(D) *Number of nets.* The total number of individual nets or net panels for a vessel, including all nets on board the vessel, hauled by the vessel or deployed by the vessel, does not exceed 80.

(E) *Number of nets per string.* The total number of nets or net panels in a net string does not exceed 13.

(F) *Tie-down system.* The gillnet gear is equipped with tie-downs spaced not more than 24 ft (7.3 m) apart along the floatline, and each tie-down is not more than 48 inches (18.90 cm) in length from the point where it connects to the floatline to the point where it connects to the lead line.

(iii) *Gear limitations and requirements—small mesh gillnet gear.* From January 1 through April 30 of each year, except during February 1 through March 15 as described in paragraph (b)(3)(i) of this section, no person may fish with, set, haul back, possess on board a vessel unless stowed in accordance with § 229.2, or fail to remove any small mesh gillnet gear in the Mudhole South Management Area unless the gear complies with the specified gear characteristics described in paragraphs (b)(3)(iii)(A) through (F) of this section. During this period, no vessel may enter or remain in the Mudhole South Management Area with small mesh gillnet gear on board unless the gear complies with the specified gear characteristics described in paragraphs (b)(3)(iii)(A) through (F) of this section, or is stowed in accordance with § 229.2. In order to comply with these specified gear characteristics, the gear must have all the following characteristics:

(A) *Floatline length.* The floatline is not more than 3,000 ft (914.4 m) in length.

(B) *Twine size.* The twine is at least 0.031 inches (0.81 mm) in diameter.

(C) *Size of nets.* Individual nets or net panels are not more than 300 ft (91.4 m or 50 fathoms) in length.

(D) *Number of nets.* The total number of individual nets or net panels for a vessel, including all nets on board the vessel, hauled by the vessel or deployed by the vessel, does not exceed 45.

(E) *Number of nets per string.* The total number of nets or net panels in a net string does not exceed 10.

(F) *Tie-down system.* Tie-downs are prohibited.

(4) *Southern Mid-Atlantic Management Area.* The Southern Mid-Atlantic Management Area is bounded by straight lines connecting the following points in the order stated:

SOUTHERN MID-ATLANTIC MANAGEMENT AREA

Point	N. Lat.	W. Long.
SMA1	38°47.0′	75°05.0′ (DE shoreline)
SMA2	38°47.0′	72°30.0′
SMA3	33°51.1′	72°30.0′
SMA4	33°51.1′	78°32.5′ (NC/SC border)

(i) *Closures.* From February 15 through March 15, it is prohibited to fish with, set, haul back, possess on board a vessel unless stowed in accordance with § 229.2, or fail to remove any large mesh gillnet gear from the Southern Mid-Atlantic Management Area.

(ii) *Gear limitations and requirements—large mesh gillnet gear.* From February 1 through April 30, except during February 15 through March 15 as described in paragraph (b)(4)(i) of this section, no person may fish with, set, haul back, possess on board a vessel unless stowed in accordance with § 229.2, or fail to remove any large mesh gillnet gear in the Southern Mid-Atlantic Management Area unless the gear complies with the specified gear characteristics described in paragraphs (b)(4)(ii)(A) through (F) of this section. During this period, no vessel may enter or remain in the Southern Mid-Atlantic Management Area with large mesh gillnet gear on board, unless the gear complies with the specified gear characteristics described in paragraphs (b)(4)(ii)(A) through (F) of this section, or is stowed in accordance with § 229.2. In order to comply with these specified gear characteristics, the gear must have all the following characteristics:

(A) *Floatline length.* The floatline is not more than 3,900 ft (1,188.7 m) in length.

(B) *Twine size.* The twine is at least 0.035 inches (0.90 mm) in diameter.

(C) *Size of nets.* Individual nets or net panels are not more than 300 ft (91.4 m or 50 fathoms) in length.

(D) *Number of nets.* The total number of individual nets or net panels for a vessel, including all nets on board the vessel, hauled by the vessel or deployed by the vessel, does not exceed 80.

(E) *Number of nets per string.* The total number of nets or net panels in a net string does not exceed 13.

(F) *Tie-down system.* The gillnet gear is equipped with tie-downs spaced not more than 24 ft (7.3 m) apart along the floatline, and each tie-down is not more than 48 inches (18.90 cm) in length from the point where it connects to the floatline to the point where it connects to the lead line.

(iii) *Gear limitations and requirements—small mesh gillnet gear.* From February 1 through April 30, no person may fish with, set, haul back, possess on board a vessel unless stowed in accordance with § 229.2, or fail to remove any small mesh gillnet gear in the Southern Mid-Atlantic Management Area unless the gear complies with the specified gear characteristics described in paragraphs (b)(4)(iii)(A) through (F) of this section. During this period, no vessel may enter or remain in the Southern Mid-Atlantic Management Area with small mesh gillnet gear on board, unless the gear complies with the specified gear characteristics described in paragraphs (b)(4)(iii)(A) through (F) of this section, or is stowed in accordance with § 229.2. In order to comply with these specified gear characteristics, the gear must have all the following characteristics:

(A) *Floatline length.* The floatline is no longer than 2,118 ft (645.6 m).

(B) *Twine size.* The twine is at least 0.031 inches (0.81 mm) in diameter.

(C) *Size of nets.* Individual nets or net panels are not more than 300 ft (91.4 m or 50 fathoms) in length.

(D) *Number of nets.* The total number of individual nets or net panels for a vessel, including all nets on board the vessel, hauled by the vessel or deployed by the vessel, does not exceed 45.

(E) *Number of nets per string.* The total number of nets or net panels in a net string does not exceed 7.

(F) *Tie-down system.* Tie-downs are prohibited.

(c) *Research permits.* An exemption to the requirements set forth in this section may be acquired for the purposes of conducting scientific or gear research within the restricted areas described in this section. A scientific research permit must be acquired through NMFS' existing permit application process, administered by NMFS.

(d) *Other special measures.* The Assistant Administrator may revise the requirements of this section through notification published in the **Federal Register** if NMFS determines that the boundary or timing of a closed area is inappropriate, or that gear modifications are not reducing bycatch to below the stock's PBR level.

[FR Doc. 2010–3273 Filed 2–18–10; 8:45 am]

BILLING CODE 3510–22–P

DEPARTMENT OF COMMERCE

National Oceanic and Atmospheric Administration

50 CFR Part 622

[Docket No. 001005281–0369–02]

RIN 0648–XU33

Fisheries of the Caribbean, Gulf of Mexico, and South Atlantic; Coastal Migratory Pelagic Resources of the Gulf of Mexico and South Atlantic; Closure

AGENCY: National Marine Fisheries Service (NMFS), National Oceanic and Atmospheric Administration (NOAA), Commerce.

ACTION: Temporary rule; closure.

SUMMARY: NMFS closes the commercial hook-and-line fishery for king mackerel in the southern Florida west coast subzone. This closure is necessary to protect the Gulf king mackerel resource.

DATES: This rule is effective 12:01 a.m., local time, February 15, 2010, through June 30, 2010.

FOR FURTHER INFORMATION CONTACT: Susan Gerhart, telephone 727–824–5305, fax 727–824–5308, e-mail *susan.gerhart@noaa.gov*.

SUPPLEMENTARY INFORMATION: The fishery for coastal migratory pelagic fish (king mackerel, Spanish mackerel, cero, cobia, little tunny, and, in the Gulf of Mexico only, dolphin and bluefish) is managed under the Fishery Management Plan for the Coastal Migratory Pelagic Resources of the Gulf of Mexico and South Atlantic (FMP). The FMP was prepared by the Gulf of Mexico and South Atlantic Fishery Management Councils (Councils) and is implemented under the authority of the Magnuson-Stevens Fishery Conservation and Management Act (Magnuson-Stevens Act) by regulations at 50 CFR part 622.

On April 27, 2000, NMFS implemented the final rule (65 FR 16336, March 28, 2000) that divided the Florida west coast subzone of the eastern zone into northern and southern subzones, and established their separate quotas. The quota for the hook-and-line fishery in the southern Florida west coast subzone is 520,312 lb (236,010 kg)(50 CFR 622.42(c)(1)(i)(A)(*2*)(*i*)).

Under 50 CFR 622.43(a), NMFS is required to close any segment of the king mackerel commercial fishery when its quota has been reached, or is projected to be reached, by filing a notification at the Office of the **Federal Register**. NMFS has determined the commercial quota for Gulf group king mackerel in the southern Florida west coast subzone will be reached by February 15, 2010. Accordingly, the commercial fishery for Gulf group king mackerel in the southern subzone is closed effective 12:01 a.m., local time, February 15, 2010, through June 30, 2010, the end of the fishing year.

From November 1 through March 31, the southern subzone is that part of the Florida west coast subzone off Collier and Monroe Counties, Florida. This is the area south and west from 25° 20.4' N. lat. (a line directly east from the Miami-Dade/Monroe County boundary on the east coast of Florida) to 26° 19.8' N. lat. (a line directly west from the Lee/Collier County boundary on the west coast of Florida). Beginning April 1, the southern subzone is reduced to the area off Collier County, Florida, between 25° 48' N. lat. and 26° 19.8' N. lat.

During the closure period, no person aboard a vessel for which a commercial permit for king mackerel has been issued may fish for or retain Gulf group king mackerel in Federal waters of the closed subzone. There is one exception, however, for a person aboard a charter vessel or headboat. A person aboard a vessel that has a valid charter/headboat permit and also has a commercial king mackerel permit for coastal migratory pelagic fish may continue to retain king mackerel in or from the closed subzone under the 2–fish daily bag limit, provided the vessel is operating as a charter vessel or headboat. Charter vessels or headboats that hold a commercial king mackerel permit are considered to be operating as a charter vessel or headboat when they carry a passenger who pays a fee or when more than three persons are aboard, including operator and crew.

Classification

This action responds to the best available information recently obtained from the fishery. The Assistant Administrator for Fisheries, NOAA (AA), finds that the need to immediately implement this action to close the fishery constitutes good cause to waive the requirements to provide prior notice and opportunity for public comment pursuant to the authority set forth in 5 U.S.C. 553(b)(B), as such procedures would be unnecessary and contrary to the public interest. Such procedures would be unnecessary because the rule itself already has been subject to notice and comment, and all that remains is to notify the public of the closure.

Allowing prior notice and opportunity for public comment is contrary to the public interest because of the need to immediately implement this action to protect the fishery since the capacity of the fishing fleet allows for rapid harvest of the quota. Prior notice and opportunity for public comment would require time and would potentially result in a harvest well in excess of the established quota.

For the aforementioned reasons, the AA also finds good cause to waive the 30–day delay in effectiveness of the action under 5 U.S.C. 553(d)(3).

This action is taken under 50 CFR 622.43(a) and is exempt from review under Executive Order 12866.

Authority: 16 U.S.C. 1801 *et seq.*

Dated: February 12, 2010.

Emily H. Menashes,

Acting Director, Office of Sustainable Fisheries, National Marine Fisheries Service.

[FR Doc. 2010–3092 Filed 2–12–10; 4:15 pm]

BILLING CODE 3510–22–S

DEPARTMENT OF COMMERCE

National Oceanic and Atmospheric Administration

50 CFR Part 679

[Docket No. 0810141351–9087–02]

RIN 0648–XU36

Fisheries of the Exclusive Economic Zone Off Alaska; Pacific Cod by Catcher/Processors Using Hook-and-Line Gear in the Bering Sea and Aleutian Islands Management Area

AGENCY: National Marine Fisheries Service (NMFS), National Oceanic and Atmospheric Administration (NOAA), Commerce.

ACTION: Temporary rule; closure.

SUMMARY: NMFS is prohibiting directed fishing for Pacific cod by catcher/processors using hook-and-line gear in the Bering Sea and Aleutian Islands management area (BSAI). This action is necessary to prevent exceeding the A season allowance of the 2010 Pacific cod total allowable catch (TAC) allocated to catcher/processors using hook-and-line gear in the BSAI.

DATES: Effective 1200 hrs, Alaska local time (A.l.t.), February 9, 2010, through 1200 hrs, A.l.t., June 10, 2010.

FOR FURTHER INFORMATION CONTACT: Josh Keaton, 907–586–7228.

SUPPLEMENTARY INFORMATION: NMFS manages the groundfish fishery in the BSAI according to the Fishery Management Plan for Groundfish of the Bering Sea and Aleutian Islands Management Area (FMP) prepared by the North Pacific Fishery Management Council under authority of the Magnuson-Stevens Fishery Conservation and Management Act. Regulations governing fishing by U.S. vessels in accordance with the FMP appear at subpart H of 50 CFR part 600 and 50 CFR part 679.

The A season apportionment of the 2010 Pacific cod TAC allocated as a directed fishing allowance to catcher/processors using hook-and-line gear in the BSAI is 37,230 metric as established by the final 2009 and 2010 harvest specifications for groundfish in the BSAI (74 FR 7359, February 17, 2009) and inseason adjustment (74 FR 68717, December 29, 2009).

In accordance with § 679.20(d)(1)(iii), the Regional Administrator finds that the A season apportionment of the 2010 Pacific cod directed fishing allowance allocated to catcher/processors using hook-and-line gear in the BSAI has been reached. Consequently, NMFS is prohibiting directed fishing for Pacific cod by catcher/processors using hook-and-line gear in the BSAI.

After the effective date of this closure the maximum retainable amounts at § 679.20(e) and (f) apply at any time during a trip.

Classification

This action responds to the best available information recently obtained from the fishery. The Assistant Administrator for Fisheries, NOAA (AA), finds good cause to waive the requirement to provide prior notice and opportunity for public comment pursuant to the authority set forth at 5 U.S.C. 553(b)(B) as such requirement is impracticable and contrary to the public interest. This requirement is impracticable and contrary to the public interest as it would prevent NMFS from responding to the most recent fisheries data in a timely fashion and would delay the closure of directed fishing for Pacific cod by catcher/processors using hook-and-line gear in the BSAI. NMFS was unable to publish a notice providing time for public comment because the most recent, relevant data only became available as of February 8, 2010.

The AA also finds good cause to waive the 30–day delay in the effective date of this action under 5 U.S.C. 553(d)(3). This finding is based upon the reasons provided above for waiver of prior notice and opportunity for public comment.

This action is required by section 679.20 and is exempt from review under Executive Order 12866.

Authority: 16 U.S.C. 1801 *et seq.*

Dated: February 12, 2010.

Emily H. Menashes,

Acting Director, Office of Sustainable Fisheries, National Marine Fisheries Service.

[FR Doc. 2010–3083 Filed 2–12–10; 4:15 pm]

BILLING CODE 3510–22–S

DEPARTMENT OF COMMERCE

National Oceanic and Atmospheric Administration

50 CFR Part 679

[Docket No. 0810141351–9087–02]

RIN 0648–XU34

Fisheries of the Exclusive Economic Zone Off Alaska; Bering Sea and Aleutian Islands Trawl Limited Access Fishery in the *C. opilio* Bycatch Limitation Zone of the Bering Sea and Aleutian Islands Management Area

AGENCY: National Marine Fisheries Service (NMFS), National Oceanic and Atmospheric Administration (NOAA), Commerce.

ACTION: Temporary rule; closure.

SUMMARY: NMFS is prohibiting directed fishing for vessels in the Bering Sea and Aleutian Islands (BSAI) trawl limited access fisheries, except American Fisheries Act (AFA) vessels using pelagic trawl gear for walleye pollock, in the *C. opilio* bycatch limitation zone (COBLZ) of the BSAI management area. This action is necessary to prevent exceeding the 2010 COBLZ bycatch allowance of *C. opilio* specified for the BSAI trawl limited access fishery in the BSAI management area.

DATES: Effective 1200 hrs, Alaska local time (A.l.t.), February 8, 2010, through 2400 hrs, A.l.t., December 31, 2010.

FOR FURTHER INFORMATION CONTACT: Steve Whitney, 907–586–7269.

SUPPLEMENTARY INFORMATION: NMFS manages the groundfish fishery in the BSAI according to the Fishery Management Plan for Groundfish of the Bering Sea and Aleutian Islands Management Area (FMP) prepared by the North Pacific Fishery Management Council under authority of the Magnuson-Stevens Fishery Conservation and Management Act. Regulations governing fishing by U.S. vessels in accordance with the FMP appear at subpart H of 50 CFR part 600 and 50 CFR part 679.

The 2010 COBLZ bycatch allowance of *C. opilio* Tanner crab specified for vessels participating in the BSAI trawl limited access fishery in the BSAI is 1,248,494 animals as established by the final 2009 and 2010 harvest specifications for groundfish in the BSAI (74 7359, February 17, 2009).

The Administrator, Alaska Region, NMFS, has determined that the 2010 COBLZ bycatch allowance of *C. opilio* specified for vessels participating in the BSAI trawl limited access fishery in the BSAI has been caught. Consequently, in accordance with § 679.21(e)(7)(iv), NMFS is closing directed fishing in the COBLZ of the BSAI management area for vessels participating in the BSAI trawl limited access fishery, except American Fisheries Act (AFA) vessels using pelagic trawl gear for walleye pollock.

After the effective date of this closure the maximum retainable amounts at § 679.20(e) and (f) apply at any time during a trip.

Classification

This action responds to the best available information recently obtained from the fishery. The Assistant Administrator for Fisheries, NOAA

(AA), finds good cause to waive the requirement to provide prior notice and opportunity for public comment pursuant to the authority set forth at 5 U.S.C. 553(b)(B) as such requirement is impracticable and contrary to the public interest. This requirement is impracticable and contrary to the public interest as it would prevent NMFS from responding to the most recent fisheries data in a timely fashion and would delay the closure of directed fishing in the COBLZ by vessels participating in the BSAI trawl limited access fishery of the BSAI. NMFS was unable to publish a notice providing time for public comment because the most recent, relevant data only became available as of February 5, 2010.

The AA also finds good cause to waive the 30–day delay in the effective date of this action under 5 U.S.C. 553(d)(3). This finding is based upon the reasons provided above for waiver of prior notice and opportunity for public comment.

This action is required by § 679.21 and is exempt from review under Executive Order 12866.

Authority: 16 U.S.C. 1801 *et seq.*

Dated: February 12, 2010.

Emily H. Menashes,

Acting Director, Office of Sustainable Fisheries, National Marine Fisheries Service.

[FR Doc. 2010–3090 Filed 2–12–10; 4:15 pm]

BILLING CODE 3510–22–S

Proposed Rules

Federal Register
Vol. 75, No. 33
Friday, February 19, 2010

This section of the FEDERAL REGISTER contains notices to the public of the proposed issuance of rules and regulations. The purpose of these notices is to give interested persons an opportunity to participate in the rule making prior to the adoption of the final rules.

DEPARTMENT OF TRANSPORTATION

Federal Aviation Administration

14 CFR Part 39

[Docket No. FAA–2010–0123; Directorate Identifier 2010–CE–004–AD]

RIN 2120–AA64

Airworthiness Directives; British Aerospace Regional Aircraft Model Jetstream Series 3101 and Jetstream Model 3201 Airplanes

AGENCY: Federal Aviation Administration (FAA), Department of Transportation (DOT).

ACTION: Notice of proposed rulemaking (NPRM).

SUMMARY: We propose to adopt a new airworthiness directive (AD) for the products listed above. This proposed AD results from mandatory continuing airworthiness information (MCAI) originated by an aviation authority of another country to identify and correct an unsafe condition on an aviation product. The MCAI describes the unsafe condition as:

BAE Systems have received three reports of uncommanded flap extensions affecting different Jetstream 31 aeroplanes. In one instance, the aeroplane exceeded the airspeed limit allowed for the uncommanded flap configuration, resulting in damage to the wing trailing edge.

Following investigation, it was considered that a loss of electrical signal to the "up" solenoid of the flap selector valve had occurred and, combined with the normal internal leakage in the hydraulic system, resulted in hydraulic pressure being supplied to the "down" side of the flap hydraulic jack. The loss of signal could have been intermittent, and the evidence strongly implicated oxide debris contamination of the flap selector switch contacts.

This condition, if not corrected, could lead to further cases of damage to the aeroplane due to airspeed limit exceedance, possibly resulting in asymmetric flap deployment, which could lead to loss of control of the aeroplane.

DATES: We must receive comments on this proposed AD by April 5, 2010.

ADDRESSES: You may send comments by any of the following methods:

- *Federal eRulemaking Portal:* Go to *http://www.regulations.gov.* Follow the instructions for submitting comments.
- *Fax:* (202) 493–2251.
- *Mail:* U.S. Department of Transportation, Docket Operations, M–30, West Building Ground Floor, Room W12–140, 1200 New Jersey Avenue, SE., Washington, DC 20590.
- *Hand Delivery:* U.S. Department of Transportation, Docket Operations, M–30, West Building Ground Floor, Room W12–140, 1200 New Jersey Avenue, SE., Washington, DC 20590, between 9 a.m. and 5 p.m., Monday through Friday, except Federal holidays.

Examining the AD Docket

You may examine the AD docket on the Internet at *http://www.regulations.gov;* or in person at the Docket Management Facility between 9 a.m. and 5 p.m., Monday through Friday, except Federal holidays. The AD docket contains this proposed AD, the regulatory evaluation, any comments received, and other information. The street address for the Docket Office (telephone (800) 647–5527) is in the **ADDRESSES** section. Comments will be available in the AD docket shortly after receipt.

FOR FURTHER INFORMATION CONTACT: Taylor Martin, Aerospace Engineer, FAA, Small Airplane Directorate, 901 Locust, Room 301, Kansas City, Missouri 64106; telephone: (816) 329–4138; fax: (816) 329–4090.

SUPPLEMENTARY INFORMATION:

Comments Invited

We invite you to send any written relevant data, views, or arguments about this proposed AD. Send your comments to an address listed under the **ADDRESSES** section. Include "Docket No. FAA–2010–0123; Directorate Identifier 2010–CE–004–AD" at the beginning of your comments. We specifically invite comments on the overall regulatory, economic, environmental, and energy aspects of this proposed AD. We will consider all comments received by the closing date and may amend this proposed AD because of those comments.

We will post all comments we receive, without change, to *http://www.regulations.gov,* including any personal information you provide. We will also post a report summarizing each substantive verbal contact we receive about this proposed AD.

Discussion

The European Aviation Safety Agency (EASA), which is the Technical Agent for the Member States of the European Community, has issued EASA AD No.: 2009–0267, dated December 17, 2009 (referred to after this as "the MCAI"), to correct an unsafe condition for the specified products. The MCAI states:

BAE Systems have received three reports of uncommanded flap extensions affecting different Jetstream 31 aeroplanes. In one instance, the aeroplane exceeded the airspeed limit allowed for the uncommanded flap configuration, resulting in damage to the wing trailing edge.

Following investigation, it was considered that a loss of electrical signal to the "up" solenoid of the flap selector valve had occurred and, combined with the normal internal leakage in the hydraulic system, resulted in hydraulic pressure being supplied to the "down" side of the flap hydraulic jack. The loss of signal could have been intermittent, and the evidence strongly implicated oxide debris contamination of the flap selector switch contacts.

This condition, if not corrected, could lead to further cases of damage to the aeroplane due to airspeed limit exceedance, possibly resulting in asymmetric flap deployment, which could lead to loss of control of the aeroplane.

To address this unsafe condition, BAE Systems have developed a modification for the wiring to the flap selector switch, connecting a different (unused) pair of contacts to provide a duplicated signal path within the switch.

For the reasons described above, this AD requires the modification of the flap selector switch wiring.

You may obtain further information by examining the MCAI in the AD docket.

Relevant Service Information

BAE Systems has issued British Aerospace Jetstream Series 3100 & 3200 Service Bulletin 27–JM7861, dated February 12, 2008. The actions described in this service information are intended to correct the unsafe condition identified in the MCAI.

FAA's Determination and Requirements of the Proposed AD

This product has been approved by the aviation authority of another country, and is approved for operation in the United States. Pursuant to our bilateral agreement with this State of

Design Authority, they have notified us of the unsafe condition described in the MCAI and service information referenced above. We are proposing this AD because we evaluated all information and determined the unsafe condition exists and is likely to exist or develop on other products of the same type design.

Differences Between This Proposed AD and the MCAI or Service Information

We have reviewed the MCAI and related service information and, in general, agree with their substance. But we might have found it necessary to use different words from those in the MCAI to ensure the AD is clear for U.S. operators and is enforceable. In making these changes, we do not intend to differ substantively from the information provided in the MCAI and related service information.

We might also have proposed different actions in this AD from those in the MCAI in order to follow FAA policies. Any such differences are highlighted in a NOTE within the proposed AD.

Costs of Compliance

We estimate that this proposed AD will affect 190 products of U.S. registry. We also estimate that it would take about 5 work-hours per product to comply with the basic requirements of this proposed AD. The average labor rate is $85 per work-hour. Required parts would cost about $50 per product.

Based on these figures, we estimate the cost of the proposed AD on U.S. operators to be $90,250, or $475 per product.

Authority for This Rulemaking

Title 49 of the United States Code specifies the FAA's authority to issue rules on aviation safety. Subtitle I, section 106, describes the authority of the FAA Administrator. "Subtitle VII: Aviation Programs," describes in more detail the scope of the Agency's authority.

We are issuing this rulemaking under the authority described in "Subtitle VII, Part A, Subpart III, Section 44701: General requirements." Under that section, Congress charges the FAA with promoting safe flight of civil aircraft in air commerce by prescribing regulations for practices, methods, and procedures the Administrator finds necessary for safety in air commerce. This regulation is within the scope of that authority because it addresses an unsafe condition that is likely to exist or develop on products identified in this rulemaking action.

Regulatory Findings

We determined that this proposed AD would not have federalism implications under Executive Order 13132. This proposed AD would not have a substantial direct effect on the States, on the relationship between the national Government and the States, or on the distribution of power and responsibilities among the various levels of government.

For the reasons discussed above, I certify this proposed regulation:

1. Is not a "significant regulatory action" under Executive Order 12866;
2. Is not a "significant rule" under the DOT Regulatory Policies and Procedures (44 FR 11034, February 26, 1979); and
3. Will not have a significant economic impact, positive or negative, on a substantial number of small entities under the criteria of the Regulatory Flexibility Act.

We prepared a regulatory evaluation of the estimated costs to comply with this proposed AD and placed it in the AD docket.

List of Subjects in 14 CFR Part 39

Air transportation, Aircraft, Aviation safety, Incorporation by reference, Safety.

The Proposed Amendment

Accordingly, under the authority delegated to me by the Administrator, the FAA proposes to amend 14 CFR part 39 as follows:

PART 39—AIRWORTHINESS DIRECTIVES

1. The authority citation for part 39 continues to read as follows:

Authority: 49 U.S.C. 106(g), 40113, 44701.

§ 39.13 [Amended]

2. The FAA amends § 39.13 by adding the following new AD:

British Aerospace Regional Aircraft: Docket No. FAA–2010–0123; Directorate Identifier 2010–CE–004–AD.

Comments Due Date

(a) We must receive comments by April 5, 2010.

Affected ADs

(b) None.

Applicability

(c) This AD applies to Jetstream Series 3101 and Jetstream Model 3201 airplanes, all serial numbers, certificated in any category.

Subject

(d) Air Transport Association of America (ATA) Code 27: Flight Controls.

Reason

(e) The mandatory continuing airworthiness information (MCAI) states:

BAE Systems have received three reports of uncommanded flap extensions affecting different Jetstream 31 aeroplanes. In one instance, the aeroplane exceeded the airspeed limit allowed for the uncommanded flap configuration, resulting in damage to the wing trailing edge.

Following investigation, it was considered that a loss of electrical signal to the 'up' solenoid of the flap selector valve had occurred and, combined with the normal internal leakage in the hydraulic system, resulted in hydraulic pressure being supplied to the 'down' side of the flap hydraulic jack. The loss of signal could have been intermittent, and the evidence strongly implicated oxide debris contamination of the flap selector switch contacts.

This condition, if not corrected, could lead to further cases of damage to the aeroplane due to airspeed limit exceedance, possibly resulting in asymmetric flap deployment, which could lead to loss of control of the aeroplane.

To address this unsafe condition, BAE Systems have developed a modification for the wiring to the flap selector switch, connecting a different (unused) pair of contacts to provide a duplicated signal path within the switch.

For the reasons described above, this AD requires the modification of the flap selector switch wiring.

Actions and Compliance

(f) Unless already done, within 6 months after the effective date of this AD, install modification JM7861, Introduction of a Wire Link to Flap Selector Switch, following the accomplishment instructions of BAE Systems British Aerospace Jetstream Series 3100 & 3200 Service Bulletin 27–JM7861, dated February 12, 2008.

FAA AD Differences

Note: This AD differs from the MCAI and/or service information as follows: No differences.

Other FAA AD Provisions

(g) The following provisions also apply to this AD:

(1) Alternative Methods of Compliance (AMOCs): The Manager, Standards Office, FAA, has the authority to approve AMOCs for this AD, if requested using the procedures found in 14 CFR 39.19. Send information to ATTN: Taylor Martin, Aerospace Engineer, FAA, Small Airplane Directorate, 901 Locust, Room 301, Kansas City, Missouri 64106; telephone: (816) 329–4138; fax: (816) 329–4090. Before using any approved AMOC on any airplane to which the AMOC applies, notify your appropriate principal inspector (PI) in the FAA Flight Standards District Office (FSDO), or lacking a PI, your local FSDO.

(2) Airworthy Product: For any requirement in this AD to obtain corrective actions from a manufacturer or other source, use these actions if they are FAA-approved. Corrective actions are considered FAA-approved if they are approved by the State of Design Authority (or their delegated agent). You are required to assure the product is airworthy before it is returned to service.

(3) Reporting Requirements: For any reporting requirement in this AD, under the provisions of the Paperwork Reduction Act (44 U.S.C. 3501 *et seq.*), the Office of Management and Budget (OMB) has approved the information collection requirements and has assigned OMB Control Number 2120–0056.

Related Information

(h) Refer to MCAI European Aviation Safety Agency AD No.: 2009–0267, dated December 17, 2009; and BAE Systems British Aerospace Jetstream Series 3100 & 3200 Service Bulletin 27–JM7861, dated February 12, 2008, for related information.

Issued in Kansas City, Missouri, on February 8, 2010.

Steven W. Thompson,

Acting Manager, Small Airplane Directorate, Aircraft Certification Service.

[FR Doc. 2010–3190 Filed 2–18–10; 8:45 am]

BILLING CODE 4910–13–P

DEPARTMENT OF TRANSPORTATION

Federal Aviation Administration

14 CFR Part 39

[Docket No. FAA–2010–0122; Directorate Identifier 2009–CE–067–AD]

RIN 2120–AA64

Airworthiness Directives; Piper Aircraft, Inc. Models PA–32R–301T and PA–46–350P Airplanes

AGENCY: Federal Aviation Administration (FAA), Department of Transportation (DOT).

ACTION: Notice of proposed rulemaking (NPRM).

SUMMARY: We propose to adopt a new airworthiness directive (AD) for certain Piper Aircraft, Inc. Models PA–32R–301T and PA–46–350P airplanes. This proposed AD would require you to replace any spot-welded V-band exhaust coupling with a riveted V-band exhaust coupling. This proposed AD results from reports that spot-welded V-band exhaust couplings are failing. We are proposing this AD to prevent failure of the V-band exhaust coupling, which could cause the exhaust pipe to detach from the turbocharger. This failure could result in release of high temperature gases inside the engine compartment and possibly cause an in-flight fire. An in-flight fire could lead to loss of control.

DATES: We must receive comments on this proposed AD by April 5, 2010.

ADDRESSES: Use one of the following addresses to comment on this proposed AD:

- *Federal eRulemaking Portal:* Go to *http://www.regulations.gov.* Follow the instructions for submitting comments.
- *Fax:* (202) 493–2251.
- *Mail:* U.S. Department of Transportation, Docket Operations, M–30, West Building Ground Floor, Room W12–140, 1200 New Jersey Avenue, SE., Washington, DC 20590.
- *Hand Delivery:* U.S. Department of Transportation, Docket Operations, M–30, West Building Ground Floor, Room W12–140, 1200 New Jersey Avenue, SE., Washington, DC 20590, between 9 a.m. and 5 p.m., Monday through Friday, except Federal holidays.

FOR FURTHER INFORMATION CONTACT: Darby Mirocha, Aerospace Engineer, FAA, Atlanta Aircraft Certification Office (ACO), 1701 Columbia Avenue, College Park, Georgia 30337; telephone: (404) 474–5573; fax: (404) 474–5606; e-mail: *darby.mirocha@faa.gov.*

SUPPLEMENTARY INFORMATION:

Comments Invited

We invite you to send any written relevant data, views, or arguments regarding this proposed AD. Send your comments to an address listed under the **ADDRESSES** section. Include the docket number, "FAA–2010–0122; Directorate Identifier 2009–CE–067–AD" at the beginning of your comments. We specifically invite comments on the overall regulatory, economic, environmental, and energy aspects of the proposed AD. We will consider all comments received by the closing date and may amend the proposed AD in light of those comments.

We will post all comments we receive, without change, to *http://www.regulations.gov,* including any personal information you provide. We will also post a report summarizing each substantive verbal contact we receive concerning this proposed AD.

Discussion

We have received reports that spot-welded V-band exhaust couplings that are installed on certain Piper Aircraft, Inc. Models PA–32R–301T and PA–46–350P airplanes are failing.

The V-band exhaust coupling attaches the exhaust pipe to the engine's turbocharger. The spot welds on the coupling can fail and the coupling may become detached from the turbocharger and expose the firewall to hot exhaust gases.

Several failures of part number 40D21162–340M, a Lycoming spot-welded coupling, on other airplane models have occurred, and some of the failures resulted in an in-flight fire. These failures caused us to issue the following ADs:

- AD 2004–23–17, Amendment 39–13872 (69 FR 67809, November 22, 2004), applicable to Mooney Airplane Company, Inc. Model M20M airplanes; and
- AD 2000–11–04, Amendment 39–11752 (65 FR 34941, June 1, 2000), applicable to Commander Aircraft Company Model 114TC airplanes.

A newer and more robust design V-band exhaust coupling has been developed by the Lycoming supplier that is assembled using rivets instead of spot welds.

This condition, if not corrected, could result in failure of the V-band exhaust coupling, which could cause the exhaust pipe to detach from the turbocharger. This failure could result in release of high temperature gases inside the engine compartment and possibly cause an in-flight fire. An in-flight fire could lead to loss of control.

FAA's Determination and Requirements of the Proposed AD

We are proposing this AD because we evaluated all information and determined the unsafe condition described previously is likely to exist or develop on other products of the same type design. This proposed AD would require replacing any spot-welded V-band exhaust coupling with a riveted V-band exhaust coupling.

Costs of Compliance

We estimate that this proposed AD could affect up to 596 airplanes in the U.S. registry provided they had the affected V-band exhaust coupling installed.

We estimate the following costs to do the proposed replacement:

Labor cost	Parts cost	Total cost per airplane	Total cost on U.S. operators based on all airplanes having the affected V-band exhaust coupling installed
2 work-hours × $85 per hour = $170	$714	$884	$526,864

Authority for This Rulemaking

Title 49 of the United States Code specifies the FAA's authority to issue rules on aviation safety. Subtitle I, section 106, describes the authority of the FAA Administrator. Subtitle VII, Aviation Programs, describes in more detail the scope of the Agency's authority.

We are issuing this rulemaking under the authority described in subtitle VII, part A, subpart III, section 44701, "General requirements." Under that section, Congress charges the FAA with promoting safe flight of civil aircraft in air commerce by prescribing regulations for practices, methods, and procedures the Administrator finds necessary for safety in air commerce. This regulation is within the scope of that authority because it addresses an unsafe condition that is likely to exist or develop on products identified in this rulemaking action.

Regulatory Findings

We have determined that this proposed AD would not have federalism implications under Executive Order 13132. This proposed AD would not have a substantial direct effect on the States, on the relationship between the national Government and the States, or on the distribution of power and responsibilities among the various levels of government.

For the reasons discussed above, I certify that the proposed regulation:

1. Is not a "significant regulatory action" under Executive Order 12866;

2. Is not a "significant rule" under the DOT Regulatory Policies and Procedures (44 FR 11034, February 26, 1979); and

3. Will not have a significant economic impact, positive or negative, on a substantial number of small entities under the criteria of the Regulatory Flexibility Act.

We prepared a regulatory evaluation of the estimated costs to comply with this proposed AD and placed it in the AD docket.

Examining the AD Docket

You may examine the AD docket that contains the proposed AD, the regulatory evaluation, any comments received, and other information on the Internet at *http://www.regulations.gov;* or in person at the Docket Management Facility between 9 a.m. and 5 p.m., Monday through Friday, except Federal holidays. The Docket Office (telephone (800) 647–5527) is located at the street address stated in the **ADDRESSES** section. Comments will be available in the AD docket shortly after receipt.

List of Subjects in 14 CFR Part 39

Air transportation, Aircraft, Aviation safety, Safety.

The Proposed Amendment

Accordingly, under the authority delegated to me by the Administrator, the FAA proposes to amend 14 CFR part 39 as follows:

PART 39—AIRWORTHINESS DIRECTIVES

1. The authority citation for part 39 continues to read as follows:

Authority: 49 U.S.C. 106(g), 40113, 44701.

§ 39.13 [Amended]

2. The FAA amends § 39.13 by adding the following new AD:

Piper Aircraft, Inc.: Docket No. FAA–2010–0122; Directorate Identifier 2009–CE–067–AD.

Comments Due Date

(a) We must receive comments on this airworthiness directive (AD) action by April 5, 2010.

Affected ADs

(b) None.

Applicability

(c) This AD applies to the following airplane models and serial numbers that are certificated in any category:

Model	Serial numbers
PA–32R–301T.	3257001 through 3257311.
PA–46–350P	4622001 through 4622200 and 4636001 through 4636341.

Subject

(d) Air Transport Association of America (ATA) Code 78: Engine Exhaust.

Unsafe Condition

This AD is the result of reports that spot-welded V-band exhaust couplings are failing. We are issuing this AD to prevent failure of the V-band exhaust coupling, which could cause the exhaust pipe to detach from the turbocharger. This failure could result in release of high temperature gases inside the engine compartment and possibly cause an in-flight fire. An in-flight fire could lead to loss of control.

Compliance

(e) To address this problem, you must do the following, unless already done:

Actions	Compliance	Procedures
(1) Replace V-band exhaust couplings, part number (P/N) Lycoming 40D21162–340M or Eaton/Aeroquip 55677–340M with an improved design Eaton/Aeroquip P/N NH1009399–10 or Lycoming P/N 40D23255–340M.	At the next regularly scheduled maintenance event after the effective date of this AD or within the next 25 hours time-in-service (TIS) after the effective date of this AD, whichever occurs first.	Remove the spot welded V-band clamp and discard. Install the new riveted clamp and tighten to an initial torque of 40 in. lbs. Tap the V-band clamp around its circumference with a rubber mallet to equalize band tension. Retorque the clamp to 60 in. lbs. and again tap the clamp around its circumference. Retorque the clamp to a 60 in. lbs. final torque and re-safety wire the V-band coupling.
(2) Do not install any Eaton/Aeroquip P/N 55677–340M or Lycoming P/N 40D21162–340M.	As of the effective date of this AD	Not applicable.

Alternative Methods of Compliance (AMOCs)

(f) The Manager, Atlanta Aircraft Certification Office (ACO), FAA, has the authority to approve AMOCs for this AD, if requested using the procedures found in 14 CFR 39.19. Send information to ATTN: Darby Mirocha, Aerospace Engineer, FAA, Atlanta ACO, 1701 Columbia Avenue, College Park, Georgia 30337; telephone: (404) 474–5573; fax: (404) 474–5606. Before using any approved AMOC on any airplane to which the AMOC applies, notify your appropriate principal inspector (PI) in the FAA Flight Standards District Office (FSDO), or lacking a PI, your local FSDO.

Issued in Kansas City, Missouri, on February 9, 2010.

Steven W. Thompson,

Acting Manager, Small Airplane Directorate, Aircraft Certification Service.

[FR Doc. 2010–3288 Filed 2–18–10; 8:45 am]

BILLING CODE 4910–13–P

DEPARTMENT OF TRANSPORTATION

Federal Aviation Administration

14 CFR Part 39

[Docket No. FAA–2010–0124; Directorate Identifier 2010–CE–002–AD]

RIN 2120–AA64

Airworthiness Directives; PIAGGIO AERO INDUSTRIES S.p.A Model PIAGGIO P–180 Airplanes

AGENCY: Federal Aviation Administration (FAA), Department of Transportation (DOT).

ACTION: Notice of proposed rulemaking (NPRM).

SUMMARY: We propose to adopt a new airworthiness directive (AD) for the products listed above. This proposed AD results from mandatory continuing airworthiness information (MCAI) originated by an aviation authority of another country to identify and correct an unsafe condition on an aviation product. The MCAI describes the unsafe condition as: A failure of fuel pump sealing, due to possible incorrect maintenance procedures and subsequent testing, caused a fuel leakage into the main landing gear bay. Presence of fuel vapours in that zone creates a risk of fire due to presence of potential ignition sources such as electrical equipment and connectors. The proposed AD actions that are intended to address the unsafe condition described in the MCAI.

DATES: We must receive comments on this proposed AD by April 5, 2010.

ADDRESSES: You may send comments by any of the following methods:

- *Federal eRulemaking Portal:* Go to *http://www.regulations.gov.* Follow the instructions for submitting comments.
- *Fax:* (202) 493–2251.
- *Mail:* U.S. Department of Transportation, Docket Operations, M–30, West Building Ground Floor, Room W12–140, 1200 New Jersey Avenue, SE., Washington, DC 20590.
- *Hand Delivery:* U.S. Department of Transportation, Docket Operations, M–30, West Building Ground Floor, Room W12–140, 1200 New Jersey Avenue, SE., Washington, DC 20590, between 9 a.m. and 5 p.m., Monday through Friday, except Federal holidays.

Examining the AD Docket

You may examine the AD docket on the Internet at *http://www.regulations.gov;* or in person at the Docket Management Facility between 9 a.m. and 5 p.m., Monday through Friday, except Federal holidays. The AD docket contains this proposed AD, the regulatory evaluation, any comments received, and other information. The street address for the Docket Office (telephone (800) 647–5527) is in the **ADDRESSES** section. Comments will be available in the AD docket shortly after receipt.

FOR FURTHER INFORMATION CONTACT: Sarjapur Nagarajan, Aerospace Engineer, FAA, Small Airplane Directorate, 901 Locust, Room 301, Kansas City, Missouri 64106; telephone: (816) 329–4145; fax: (816) 329–4090.

SUPPLEMENTARY INFORMATION:

Comments Invited

We invite you to send any written relevant data, views, or arguments about this proposed AD. Send your comments to an address listed under the **ADDRESSES** section. Include "Docket No. FAA–2010–0124; Directorate Identifier 2010–CE–002–AD" at the beginning of your comments. We specifically invite comments on the overall regulatory, economic, environmental, and energy aspects of this proposed AD. We will consider all comments received by the closing date and may amend this proposed AD because of those comments.

We will post all comments we receive, without change, to *http://www.regulations.gov,* including any personal information you provide. We will also post a report summarizing each substantive verbal contact we receive about this proposed AD.

Discussion

The European Aviation Safety Agency (EASA), which is the Technical Agent for the Member States of the European Community, has issued EASA AD No.: 2009–0228, dated October 26, 2009 (referred to after this as "the MCAI"), to correct an unsafe condition for the specified products. The MCAI states:

> A failure of fuel pump sealing, due to possible incorrect maintenance procedures and subsequent testing, caused a fuel leakage into the main landing gear bay. Presence of fuel vapours in that zone creates a risk of fire due to presence of potential ignition sources such as electrical equipment and connectors.
>
> As a consequence, this new Airworthiness Directive (AD) requires a functional check of main and stand-by fuel pumps for absence of leakage and an update of the Aircraft Maintenance Manual (AMM).

You may obtain further information by examining the MCAI in the AD docket.

Relevant Service Information

PIAGGIO AERO INDUSTRIES S.p.A. has issued Service Bulletin (Mandatory) N.: 80–0278, dated July 15, 2009. The actions described in this service information are intended to correct the unsafe condition identified in the MCAI.

FAA's Determination and Requirements of the Proposed AD

This product has been approved by the aviation authority of another country, and is approved for operation in the United States. Pursuant to our bilateral agreement with this State of Design Authority, they have notified us of the unsafe condition described in the MCAI and service information referenced above. We are proposing this AD because we evaluated all information and determined the unsafe condition exists and is likely to exist or develop on other products of the same type design.

Differences Between This Proposed AD and the MCAI or Service Information

We have reviewed the MCAI and related service information and, in general, agree with their substance. But we might have found it necessary to use different words from those in the MCAI to ensure the AD is clear for U.S. operators and is enforceable. In making these changes, we do not intend to differ substantively from the information provided in the MCAI and related service information.

We might also have proposed different actions in this AD from those in the MCAI in order to follow FAA policies. Any such differences are highlighted in a Note within the proposed AD.

Costs of Compliance

We estimate that this proposed AD will affect 63 products of U.S. registry.

We also estimate that it would take about 2 work-hours per product to comply with the basic requirements of this proposed AD. The average labor rate is $85 per work-hour. Required parts would cost about $10 per product.

Based on these figures, we estimate the cost of the proposed AD on U.S. operators to be $11,340, or $180 per product.

In addition, we estimate that any necessary follow-on actions would take about 40 work-hours and require parts costing $7,349 for a cost of $10,749 per product. We have no way of determining the number of products that may need these actions.

Authority for This Rulemaking

Title 49 of the United States Code specifies the FAA's authority to issue rules on aviation safety. Subtitle I, section 106, describes the authority of the FAA Administrator. "Subtitle VII: Aviation Programs," describes in more detail the scope of the Agency's authority.

We are issuing this rulemaking under the authority described in "Subtitle VII, Part A, Subpart III, Section 44701: General requirements." Under that section, Congress charges the FAA with promoting safe flight of civil aircraft in air commerce by prescribing regulations for practices, methods, and procedures the Administrator finds necessary for safety in air commerce. This regulation is within the scope of that authority because it addresses an unsafe condition that is likely to exist or develop on products identified in this rulemaking action.

Regulatory Findings

We determined that this proposed AD would not have federalism implications under Executive Order 13132. This proposed AD would not have a substantial direct effect on the States, on the relationship between the national Government and the States, or on the distribution of power and responsibilities among the various levels of government.

For the reasons discussed above, I certify this proposed regulation:

1. Is not a "significant regulatory action" under Executive Order 12866;

2. Is not a "significant rule" under the DOT Regulatory Policies and Procedures (44 FR 11034, February 26, 1979); and

3. Will not have a significant economic impact, positive or negative, on a substantial number of small entities under the criteria of the Regulatory Flexibility Act.

We prepared a regulatory evaluation of the estimated costs to comply with this proposed AD and placed it in the AD docket.

List of Subjects in 14 CFR Part 39

Air transportation, Aircraft, Aviation safety, Incorporation by reference, Safety.

The Proposed Amendment

Accordingly, under the authority delegated to me by the Administrator, the FAA proposes to amend 14 CFR part 39 as follows:

PART 39—AIRWORTHINESS DIRECTIVES

1. The authority citation for part 39 continues to read as follows:

Authority: 49 U.S.C. 106(g), 40113, 44701.

§ 39.13 [Amended]

2. The FAA amends § 39.13 by adding the following new AD:

Piaggio Aero Industries S.p.A.: Docket No. FAA–2010–0124; Directorate Identifier 2010–CE–002–AD.

Comments Due Date

(a) We must receive comments by April 5, 2010.

Affected ADs

(b) None.

Applicability

(c) This AD applies to Model PIAGGIO P–180 airplanes, all serial numbers up to and including serial number 1192, certificated in any category.

Subject

(d) Air Transport Association of America (ATA) Code 28: Fuel.

Reason

(e) The mandatory continuing airworthiness information (MCAI) states:

"A failure of fuel pump sealing, due to possible incorrect maintenance procedures and subsequent testing, caused a fuel leakage into the main landing gear bay. Presence of fuel vapours in that zone creates a risk of fire due to presence of potential ignition sources such as electrical equipment and connectors.

As a consequence, this new Airworthiness Directive (AD) requires a functional check of main and stand-by fuel pumps for absence of leakage and an update of the Aircraft Maintenance Manual (AMM)."

Actions and Compliance

(f) Unless already done, do the following actions:

(1) For all airplanes equipped with any main or standby fuel pump P/N 1C12–43 that has been replaced for any reason on or before doing the action in paragraph (f)(3) of this AD, within 150 hours time-in-service after the effective date of this AD do a functional inspection of the main and standby fuel pumps for leakage following steps 1 through 14 of the Accomplishment Instructions of PIAGGIO AERO INDUSTRIES S.p.A. Service Bulletin (Mandatory) N.: 80–0278, dated July 15, 2009.

(2) If any leakage is found during the inspection required in paragraph (f)(1) of this AD, before further flight, replace the fuel pump with a serviceable unit following the Accomplishment Instructions in PIAGGIO AERO INDUSTRIES S.p.A Service Bulletin (Mandatory) N.: 80–0278, dated July 15, 2009. For the purpose of this AD, a serviceable fuel pump is a pump where no leakage is found during the functional inspection as instructed in the Accomplishment Instructions of PIAGGIO AERO INDUSTRIES S.p.A Service Bulletin (Mandatory) N.: 80–0278, dated July 15, 2009.

(3) For all airplanes, within 30 days after the effective date of this AD, incorporate PIAGGIO P.180 AVANTI MAINTENANCE MANUAL Temporary Revision (TR) No. 33 and 34, dated July 7, 2009, or PIAGGIO P.180 AVANTI II MAINTENANCE MANUAL TR No. 31 and 41, dated July 7, 2009, in the approved operator's airplane maintenance program, e.g. aircraft maintenance manual (AMM).

FAA AD Differences

Note: This AD differs from the MCAI and/or service information as follows: No differences.

Other FAA AD Provisions

(g) The following provisions also apply to this AD:

(1) Alternative Methods of Compliance (AMOCs): The Manager, Standards Office, FAA, has the authority to approve AMOCs for this AD, if requested using the procedures found in 14 CFR 39.19. Send information to ATTN: Sarjapur Nagarajan, Aerospace Engineer, FAA, Small Airplane Directorate, 901 Locust, Room 301, Kansas City, Missouri 64106; telephone: (816) 329–4145; fax: (816) 329–4090. Before using any approved AMOC on any airplane to which the AMOC applies, notify your appropriate principal inspector (PI) in the FAA Flight Standards District Office (FSDO), or lacking a PI, your local FSDO.

(2) Airworthy Product: For any requirement in this AD to obtain corrective actions from a manufacturer or other source, use these actions if they are FAA-approved. Corrective actions are considered FAA-approved if they are approved by the State of Design Authority (or their delegated agent). You are required to assure the product is airworthy before it is returned to service.

(3) Reporting Requirements: For any reporting requirement in this AD, under the provisions of the Paperwork Reduction Act (44 U.S.C. 3501 *et seq.*), the Office of Management and Budget (OMB) has approved the information collection requirements and has assigned OMB Control Number 2120–0056.

Related Information

(h) Refer to MCAI EASA AD No.: 2009–0228, dated October 26, 2009; and PIAGGIO AERO INDUSTRIES S.p.A. Service Bulletin (Mandatory) N.: 80–0278, dated July 15, 2009, for related information.

Issued in Kansas City, Missouri, on February 8, 2010.

Steven W. Thompson,

Acting Manager, Small Airplane Directorate, Aircraft Certification Service.

[FR Doc. 2010–3290 Filed 2–18–10; 8:45 am]

BILLING CODE 4910–13–P

DELAWARE RIVER BASIN COMMISSION

18 CFR Part 410

Schedule of Water Charges

AGENCY: Delaware River Basin Commission.

ACTION: Notice of proposed rulemaking and public hearing.

SUMMARY: The Delaware River Basin Commission will hold a public hearing to receive comments on proposed amendments to the Administrative Manual—Part III—Basin Regulations—Water Supply Charges to revise the schedule of water charges.

DATES: The Commission will hold a public hearing on Tuesday, April 13, 2010, beginning at 1:30 p.m. The hearing will continue until the later of 3:30 p.m. or such time as all those who wish to testify have been afforded an opportunity to do so. Written comments will be accepted until 5 p.m. on Friday, April 16, 2010.

ADDRESSES: The hearing will take place in the Goddard Room at the Commission's office building, located at 25 State Police Drive, West Trenton, New Jersey. Driving directions are available on the Commission's Web site—*http://www.drbc.net.* Please do not rely on Internet mapping services as they may not provide accurate directions to the DRBC.

Written comments may be submitted at the hearing and may also be sent as follows: via e-mail to *Paula.Schmitt@drbc.state.nj.us;* otherwise, to the attention of the Commission Secretary, DRBC, either by fax to (609) 883–9522; U.S. Mail to P.O. Box 7360, West Trenton, NJ 08628–0360; or delivery service to 25 State Police Drive, West Trenton, NJ 08628–0360. Regardless of the method of submission, written comments should include the name, affiliation (if any) and address of the commenter and the subject line "Schedule of Water Charges."

FOR FURTHER INFORMATION, CONTACT: Please contact Paula Schmitt at 609–477–7224 or Katharine O'Hara at 609–477–7205 with questions about the public hearing.

SUPPLEMENTARY INFORMATION: *Background.* In response to the need to fund certain water supply storage facility projects, the Commission between 1964 and 1974 established a system of water supply charges pursuant to section 3.7 of the Delaware River Basin Compact. In December of 1964, it adopted Resolution 64–16A, "A Resolution to establish policy concerning water supply in federal projects authorized in the Comprehensive Plan." This resolution established a revenue stream to repay the obligations the Commission eventually assumed to purchase capacity at the federal government's Beltzville and Blue Marsh water storage facilities. The resolution specifically provided that the debt for DRBC's share of storage in these facilities would be repaid through the sale of water (or other products and services) and through an apportionment of the costs to the states benefiting from those projects. *See* Resolution No. 64–16A, adopted December 29, 1964 (adding to the Comprehensive Plan a "Section IX—Water Supply Policy", par. 3.a. and b. of which establish the described debt repayment mechanisms).

The Commission subsequently adopted Resolution No. 71–4, "A Resolution to amend and supplement the Comprehensive Plan by the addition of a new article on policy for water supply charges." This resolution established a schedule of rates for basin water withdrawals and provided that the "charges for water supplied will include all costs associated with making basin water supply available and maintaining its continued availability in adequate quantity and quality over time." Res. No. 71–4, adopted April 7, 1971, par. A.2. Resolution No. 71–4 requires the Commission to collect sufficient annual revenue to meet all annual project costs, "including debt service, operation, maintenance, replacement, reserves, and associated administrative costs." Res. No. 71–4, par. A.2.b. The Commission recognized that the waters of the basin formed a "unitary system" and thus applied the charges to water withdrawals made throughout the basin, including up-stream of Commission facilities. *See* Res. No. 71–4, preamble. The unitary system is sometimes referred to as the "pooled water" theory. *See,* for example, *Delaware River Basin Commission* v. *Bucks County Water & Sewer Authority,* 641 F. 2d 1087, 1094 (3rd Cir. 1982) (citing *Borough of Morrisville* v. *Delaware River Basin Comm'n,* 399 F.Supp. 469, 471 (E.D. Pa. 1975), aff'd per curiam, 532 F.2d 745 (3d Cir. 1976)). Resolution No. 71–4 imposed charges only on withdrawals from surface waters of the basin. In accordance with Section 15.1(b) of the Compact, it limited charges to the amounts of water withdrawn in excess of those "that could lawfully have been made without charge on the effective date of the Compact." Compact § 15.1(b).

The Commission has historically placed the revenues generated through the sale of water in an account called the "Water Supply Storage Facilities Fund" ("Storage Fund"). The Storage Fund holds funds dedicated to pay the costs of project construction, operation, maintenance, and replacement, as well as associated administrative costs. See Res. No. 71–4, par. A.2. The estimated balance in the Storage Fund as of June 30, 2009 was $12.1M. A snapshot of the Storage Fund at the close of fiscal year ending July 31, 2009 shows the following: The Storage Fund received approximately $2.6M in water sale revenue. It disbursed or incurred approximately $2.2M in expenses, consisting of approximately $483K in interest paid to the U.S. Treasury, $423K in asset depreciation, $310K for operations and maintenance of the Blue Marsh and Beltzville projects, $86K for contractual services from the U.S. Geological Survey for operation and maintenance of stream gauges, and $933K associated with Commission administration. The fund lost $153K on investments (the sole Storage Fund investment loss in 35 years). The approximately $204K difference between the annual costs and revenue is retained in the Storage Fund as a reserve against the future costs of expected significant repair to the facilities.

Historically, the Commission has not charged its full administrative cost against the Storage Fund. Periodic reviews of the charges have shown that the costs involved in Commission activities properly chargeable to the Storage Fund have exceeded the amounts actually charged for many years. To the extent that the Storage Fund has not been charged its full allocable costs, contributions by the signatory parties of the Delaware River Basin Compact (the states of Delaware, New Jersey, New York, Pennsylvania and the federal government) have made up the difference. In extremely challenging economic times, however, the signatories find themselves less capable of assuming this burden. In fiscal year 2010, an adjustment was made to better align charges to the Storage Fund with actual costs. Even absent this adjustment, the trend evident since 2008 is that retained Storage Fund earnings have leveled off.

Recent plant closures in the basin are expected to result in reductions of approximately $500K annually (about 20 percent) in water sale revenues, while the costs of reservoir maintenance and operations, contractual services and administration continue to rise.

DRBC's Current Schedule of Water Charges. Resolution No. 71–4 provided that water rates would consist of "the weighted-average unit cost of all water stored by or on behalf of the Commission" and specified that the unit cost of all water would be determined "by dividing all of the commission's annual project cost by the net yield of the water supply in federal reservoirs authorized in the commission's Comprehensive Plan." Res. No. 71–4, par. A.2.a. *Also see* Res. No. 78–14, preamble.

In accordance with this formula, the current schedule of water charges was established by Resolution No. 78–14 in October of 1978, based on the unit cost of water stored by the Commission in the Beltzville and Blue Marsh reservoirs. It was codified at section 5.3.1 of the Commission's Administrative Manual—Part III—Basin Regulations—Water Supply Charges (hereinafter, "WSC"). Section 5.3.1 provides that the Commission "will from time to time, after public notice and hearing, make, amend and revise a schedule of water charges" and that until changed, the charges for water shall be $.06 per thousand gallons for consumptive use ($60 per million gallons) and six-tenths of a mill per thousand gallons ($.60 per million gallons) for non-consumptive use. WSC § 5.3.1. These rates which have remain unchanged for more than 30 years, lag far behind the rates charged for raw (untreated) water by the Commission's sister agency the Susquehanna River Basin Commission (SRBC) and by the New Jersey Water Supply Authority (NJWSA) for raw water from its Raritan System.

The consumptive use rate established by SRBC in May of 1992, effective January 1, 1993, was $140 per million gallons, nearly two-and-a-half times the current rate charged by DRBC. In June of 2008, SRBC approved a two-step increase to $210 per million gallons effective January 1, 2009, and $280 per million gallons (more than four-and-a-half times DRBC's current rate) effective January 1, 2010. NJWSA charged $216 per million gallons as of July 1, 2010 and will charge $220 per million gallons (more than three-and-a-half times DRBC's current rate) as of July 1, 2011, for raw water from its Raritan System. DRBC's proposed 2010 and 2011 rates for consumptively used water remain well below those of its counterparts.

Proposed Rate Increase. Resolution No. 71–4 provided that "[c]osts, rates and charges will be recomputed * * * as often as necessary to reflect relevant changes in any cost components associated with sustaining specific base flows." Res. No. 71–4, par. A.2.a. At this time, in order to maintain net income to the Storage Fund and ensure financial stability to address future operating and maintenance costs, the Commission is proposing its first water charging rate increase in 32 years. Because many people find the expression of the rates confusing, the Commission also is proposing that the new rates be established per million gallons rather than per thousand.

In light of the difficult economic climate, the rate change is proposed in two stages. The proposed rates, calculated using the formula established by Resolution No. 71–4 and set forth above, are as follows: The consumptive use rate is proposed to be increased from $60 to $90 per million gallons effective on January 1, 2010, and from $90 to $120 per million gallons effective on January 1, 2011. The non-consumptive use rate is proposed to be increased from $.60 to $.90 per million gallons effective on January 1, 2010, and from $.90 to $1.20 per million gallons effective on January 1, 2011.

Even with the proposed increases, Delaware Basin water will remain inexpensive when compared to raw water in neighboring jurisdictions. Notably, the proposed 2012 rate of $120 per million gallons for raw water consumptively used in the Delaware Basin is less than half the rate of $280 currently in effect in the Susquehanna Basin and only a little more than half the rate of $216 currently charged by the NJWSA for its Raritan System water, which rate will increase to $220 effective January 1, 2011. The Commission's proposed 2012 rate is below the current (2010) rate of $60 per million if adjusted for inflation, which would be approximately $200 per million gallons.

No Change to Exempt Uses. No change to the list of uses exempt from charges, as set forth at WSC § 5.3.3 is proposed. The following categories of uses are currently exempt from water charges: Non-consumptive uses of less than 1,000 gallons a day and less than 100,000 gallons during any quarter (§ 5.3.3 A.); ballast water used for shipping purposes (§ 5.3.3 B.); water taken, withdrawn or diverted from streams tributary to the River Master's gauging station at Montague, New Jersey (§ 5.3.3 C.); and water taken, diverted or withdrawn below the mouth of the Cohansey River and such proportion of water withdrawn above that point and below the mouth of the Schuylkill River as the Executive Director may determine would have no discernable effect upon the maintenance of the salt front below the mouth of the Schuylkill River (§ 5.3.3 D.).

Pamela M. Bush,

Commission Secretary.

[FR Doc. 2010–3219 Filed 2–18–10; 8:45 am]

BILLING CODE 6360–01–P

DEPARTMENT OF HEALTH AND HUMAN SERVICES

Food and Drug Administration

21 CFR Parts 16, 58, 71, 101, 170, 171, 190, 312, 511, 571, and 812

[Docket No. FDA–2008–N–0115]

RIN 0910–AC59

Reporting Information Regarding Falsification of Data

AGENCY: Food and Drug Administration, HHS.

ACTION: Proposed rule.

SUMMARY: The Food and Drug Administration (FDA) is proposing to amend its regulations to require sponsors to report information indicating that any person has, or may have, engaged in the falsification of data in the course of reporting study results, or in the course of proposing, designing, performing, recording, supervising, or reviewing studies that involve human subjects or animal subjects conducted by or on behalf of a sponsor or relied on by a sponsor. A sponsor would be required to report this information to the appropriate FDA center promptly, but no later than 45 calendar days after the sponsor becomes aware of the information. This proposal is necessary because ambiguity in the current reporting scheme has caused confusion among sponsors. The proposed rule is intended to help ensure the validity of data that the agency receives in support of applications and petitions for FDA product approvals and authorization of certain labeling claims and to protect research subjects.

DATES: Submit written or electronic comments on this proposed rule by May 20, 2010. See section V of this document for the proposed effective date of a final rule based on this document. Submit comments regarding the information collection by March 22, 2010 to OMB (see **ADDRESSES**).

ADDRESSES: You may submit comments, identified by Docket No. FDA–2008–N–0115 and/RIN number 0910–AC59, by any of the following methods:

Electronic Submissions

Submit electronic comments in the following ways:

- Federal eRulemaking Portal: *http://www.regulations.gov*. Follow the instructions for submitting comments.

Written Submissions

Submit written submissions in the following ways:

- FAX: 301–827–6870.
- Mail/Hand delivery/Courier [For paper, disk, or CD–ROM submissions]: Division of Dockets Management (HFA–305), Food and Drug Administration, 5630 Fishers Lane, rm. 1061, Rockville, MD 20852.

To ensure more timely processing of comments, FDA is no longer accepting comments submitted to the agency by e-mail. FDA encourages you to continue to submit electronic comments by using the Federal eRulemaking Portal or the agency Web site, as described previously, in the **ADDRESSES** portion of this document under *Electronic Submissions*.

Instructions: All submissions received must include the agency name and Docket No(s). and Regulatory Information Number (RIN) for this rulemaking. All comments received will be posted without change to *http://www.regulations.gov*, including any personal information provided. For additional information on submitting comments, see the "Comments" heading of the **SUPPLEMENTARY INFORMATION** section of this document.

Docket: For access to the docket to read background documents or comments received, go to *http://www.regulations.gov* and insert the docket number, found in brackets in the heading of this document, into the "Search" box and follow the prompts and/or go to the Division of Dockets Management, 5630 Fishers Lane, rm. 1061, Rockville, MD 20852.

Information Collection Provisions: Submit written comments on the information collection provisions to the Office of Information and Regulatory Affairs, Office of Management and Budget (OMB). To ensure that comments on the information collection are received, please submit written comments to OMB by FAX to 202–395–7285 or by e-mail to *OIRA_submission@omb.eop.gov*. Mark your comments to the attention of the FDA desk officer and reference this rulemaking.

FOR FURTHER INFORMATION CONTACT:

For information regarding human drugs: Leslie K. Ball, Center for Drug Evaluation and Research, Office of Compliance, Food and Drug Administration, 10903 New Hampshire Ave., Bldg. 51, rm. 5342, Silver Spring, MD 20993–0002, 301–796–3150, FAX: 301–847–8750.

For information regarding biologics: Steve Ripley, Center for Biologics Evaluation and Research (HFM–17), Food and Drug Administration, 5515 Security Lane, rm. 5130, Rockville, MD 20852, 301–827–6210.

For information regarding medical devices and radiological health: Michael E. Marcarelli, Center for Devices and Radiological Health, Food and Drug Administration, 10903 New Hampshire Ave., Bldg. 66, rm. 3444, Silver Spring, MD 20993–0002, 301–796–5490.

For information regarding veterinary medicine: Gail L. Schmerfeld, Center for Veterinary Medicine (HFV–100), Food and Drug Administration, 7500 Standish Pl., Rockville, MD 20855, 240–276–8300.

For information regarding foods: Linda Katz, Center for Food Safety and Applied Nutrition (HFS–032), Food and Drug Administration, 5100 Paint Branch Pkwy., College Park, MD 20740, 301–436–1910.

For information regarding good laboratory practices for nonclinical laboratory studies: Karen Stutsman, Office of Regulatory Affairs (HFC–230), Food and Drug Administration, 15800 Crabbs Branch Way, Rockville, MD 20855, 240–632–6847.

For information regarding good clinical practice: Kathleen Pfaender, Office of Good Clinical Practice (HF–34), 5600 Fishers Lane, rm. 16–85, Rockville, MD 20857, 301–827–3340.

SUPPLEMENTARY INFORMATION:

I. Introduction

FDA is proposing to require that sponsors[1] report information indicating that any person has, or may have, engaged in the falsification of data in the course of reporting study results, or in the course of proposing, designing, performing, recording, supervising, or reviewing studies[2] that involve human subjects (e.g., clinical investigations) or animal subjects (e.g., nonclinical laboratory studies and clinical studies in animals) conducted by or on behalf of a sponsor or relied on by a sponsor. The sponsor would be required to report this information to the appropriate FDA center promptly, but no later than 45 calendar days after the sponsor becomes aware of the information. The proposed requirement for a sponsor to report information regarding falsification of data would be ongoing and cover the periods before and after study completion, including after the review, approval, or authorization of the affected product or labeling.

We are proposing to amend the appropriate regulations that govern the conduct of FDA-regulated research and the submission of information in support of applications and petitions for FDA product approvals and authorization of certain labeling claims. This requirement would be added to FDA's regulations on:

- Good laboratory practice for nonclinical laboratory studies (21 CFR part 58),
- Color additive petitions in part 71 (21 CFR part 71),
- Petitions for nutrient content claims and petitions for health claims in part 101 (21 CFR part 101),
- Information in a premarket notification for a food contact substance (FCN) in part 170 (21 CFR part 170),
- Food additive petitions (21 CFR part 171),
- Dietary supplements (21 CFR part 190),
- Investigational new drug applications (21 CFR part 312),
- New animal drugs for investigational use (21 CFR part 511),
- Food additive petitions (21 CFR part 571), and
- Investigational device exemptions (21 CFR part 812).

[1] FDA regulations on food additive, color additive, health claim, and nutrient content claim petitions refer to petitioners, rather than sponsors. In addition, the FDA regulation for the submission of new dietary ingredient notifications refers to a manufacturer or distributor, and the FDA regulation for the submission of a food contact notification (FCN) refers to a manufacturer or supplier, rather than sponsor. For the sake of brevity, FDA is using the term "sponsor" in this document to refer to petitioners submitting food additive, color additive, nutrient content claim, and health claim petitions; manufacturers or distributors submitting new dietary ingredient notifications; and sponsors as defined in §§ 58.3(f), 312.3(b), 510.3(k), and 812.3(n) (21 CFR 58.3(f), 312.3(b), 510.3(k), and 812.3(n)). The term "sponsor" as used in this document does not include a Federal agency that sponsors research or investigations through funding or contracts or an entity identified as a "sponsor" under other Federal programs (e.g., a recipient of funding from the National Institutes of Health), except to the extent that any such Federal agency or entity is a petitioner, manufacturer, distributor, or sponsor as specified in the preceding sentence.

[2] Henceforth, the term "studies" means studies involving human subjects (e.g., clinical investigations) or animal subjects (e.g., nonclinical laboratory studies and clinical studies in animals).

A. Background

Falsification of data can, if not detected, undermine subject protection and the underlying basis for FDA actions. Each year, FDA discovers falsification of data at study sites and in application submissions. Sometimes, falsification at a study site is not an isolated event and can lead to a finding of falsification of information at another site, or relating to other drugs being studied at the same site. It is critical that participants in the product development process assist FDA in detecting falsification of data.

FDA's proposal to amend the regulations has its origins in events that occurred in the mid- to late-1990s, when complaints to FDA and followup through FDA's bioresearch monitoring program revealed some particularly egregious cases of falsification of data by clinical investigators. For example, in one case, an investigator falsified data that extended across studies in 91 applications submitted to FDA by 47 different sponsors.

After discovering this widespread falsification, FDA attempted to determine why so widespread a practice remained unreported to FDA. In a series of FDA meetings, as well as congressional briefings, FDA reviewed the current requirements for sponsor reporting of noncompliant investigators, reviewed study monitoring procedures, and listened to the views of an industry trade association. In addition, the Center for Drug Evaluation and Research (CDER) established an internal working group to evaluate the effectiveness of the current reporting requirements for sponsors. The working group identified several areas of ambiguity in the current regulations related to: (1) The extent to which possible falsification of data had to be reported to the agency; (2) the amount and type of information that sponsors must report when a study and/or an investigator's participation in a study has terminated; (3) whose falsification of data must be reported; and (4) the timing of reporting.

B. Why FDA Is Proposing This Rule

We are proposing this rule for two principal reasons. First, it is important for the agency to have confidence in any data from studies conducted by, or on behalf of, a sponsor, or relied on by a sponsor for product approvals or authorization of labeling claims. This proposed rule is intended to help ensure the integrity of data submitted to FDA because reliance on falsified data could lead to clinical testing of unsafe products, approval of ineffective or unsafe products, or marketing of products with false or misleading claims. Second, it is important that the rights, safety, and welfare of subjects be protected. This proposed rule is intended to help protect research subjects[3] by making it less likely that persons who falsify data will continue to conduct studies, come in contact with research subjects, or jeopardize the rights, safety, and welfare of such subjects through unsound scientific practices.

Although our own inspections sometimes uncover falsification of data, sponsors of studies are responsible for ensuring the integrity of study data and are in a better position to discover possible falsification of data through their monitoring, auditing, and reviewing of data. We understand that in the process of reviewing and monitoring studies, some sponsors have discovered falsification of data and have been reluctant, or uncertain as to whether it was necessary, to report the information to us. For example, we are aware that in some cases, sponsors, believing that an investigator may have falsified data, have decided to retain the investigator but exclude the investigator's data without specifying the reason. In other cases, sponsors have terminated the investigator's participation in the study without notifying us of the specific reason. We are concerned that when these situations occur, an investigator who may have falsified data might continue to conduct studies, thereby jeopardizing the rights, safety, and welfare of the subjects involved in future research and the integrity of data in other studies.

Therefore, the agency is proposing this rule to clarify sponsors' reporting requirements for studies conducted by, or on behalf of, a sponsor or on which a sponsor relies to support product approvals, new dietary ingredient notifications, or authorization of labeling claims, including nutrient content claims and health claims. This proposed rule makes it clear that sponsors would be required to promptly report information indicating that any person has, or may have, engaged in the falsification of data in the course of reporting study results, or in the course of proposing, designing, performing, recording, supervising, or reviewing studies conducted by, or on behalf of, a sponsor or relied on by a sponsor. This proposed rule, when finalized, would require sponsors to report information to the appropriate FDA center about possible falsification of data whenever (before, during, or after the completion of a study) a sponsor becomes aware of the information, but in no case later than 45 calendar days after the sponsor becomes aware of that information.

The proposed regulation would allow the agency to more rapidly identify persons who have falsified data and more effectively address problems. Such persons may include those who have falsified data submitted to FDA for product reviews, approvals, and authorizations of certain labeling claims, in addition to those who have falsified data in the course of conducting FDA-regulated research. We intend to use the information collected from sponsors who notify us of possible falsification of data to identify patterns, potential signals, or other indications of misconduct, so that we can conduct further investigations. These investigations, in turn, may form the basis of administrative or enforcement actions, such as excluding clinical trials from consideration by FDA, placing a clinical trial on hold, or initiating disqualification of investigators or criminal proceedings. Taking effective action in response to falsification could lessen the magnitude and impact of the falsification in a current study, reduce the potential for delays or compromise to other studies and applications (including studies and applications from other sponsors for whom such a person might also be working), and protect the rights, safety, and welfare of research subjects.

II. Description of the Proposed Rule

A. What Changes Are We Proposing to Make?

Under proposed §§ 58.11(a), 71.1(k), 101.69(p), 101.70(k), 170.101(f), 171.1(o), 190.6(g), 312.56(e), 511.1(c), 571.1(l), and 812.46(d), sponsors would be required to report to the appropriate FDA center information indicating that any person has, or may have, engaged in the falsification of data in the course of reporting study results, or in the course of proposing, designing, performing, recording, supervising, or reviewing studies conducted by or on behalf of a sponsor or relied on by a sponsor. For the purposes of this proposed rule, "falsification of data" means creating, altering, recording, or omitting data in such a way that the data do not represent what actually occurred. These reporting requirements would apply to information related to studies including, but not limited to, clinical investigations, nonclinical laboratory studies, and clinical studies in animals.

FDA does not intend to impose any additional monitoring responsibilities under this proposed rule. This proposal

[3] For the sake of brevity, FDA is using the term "subjects" to refer to human and animal subjects.

does not relieve sponsors of any other applicable statutory or regulatory requirements.

B. Who Would Be Required to Report Information to FDA?

The proposed rule would require sponsors, as defined earlier in this preamble, to report certain information related to confirmed or possible falsification of data.

C. Whose Falsification of Data Would a Sponsor Be Required to Report?

FDA is seeking information on falsification of data by any person involved in studies conducted by or on behalf of a sponsor or relied on by a sponsor. In FDA's experience, falsification may be committed by individuals responsible for conducting studies and/or by their colleagues or subordinates. FDA believes that all persons involved in such actions must be identified so that future falsification of data can be prevented. Therefore, FDA is proposing in this regulation to require sponsors to inform FDA of any confirmed or possible falsification of data by any person involved in studies conducted by or on behalf of a sponsor or relied on by a sponsor.

D. Can FDA Provide Any Examples of Falsification of Data That Would Be Subject to the Reporting Requirements of This Proposed Rule?

"Falsification of data" is defined for the purpose of this proposed rule as creating, altering, recording, or omitting data in such a way that the data do not represent what actually occurred. Instances of falsification of data may fall into one or several of these categories. The following, although not comprehensive, represent examples of falsification of data that would be reportable under this proposed rule:

- Creating data that were never obtained (e.g., making up data or results and recording or reporting them; reporting enrollment in a study of a subject who did not exist; forging the signature on an informed consent form)
- Altering data by replacing original data with something different that does not accurately reflect study conduct or results (e.g., changing a laboratory measurement to a less extreme deviation from normal)
- Recording or obtaining data from a specimen, sample, or test whose origin is not accurately described or in a way that does not accurately reflect the data (e.g., changing the date of a specimen, sample, or test; adding a substance not called for in the study to a specimen or sample; identifying a specimen, sample, or test as coming from a specific subject when it came from a source other than the subject)
- Omitting data that were obtained and would be appropriate for recording based on study design and conduct (e.g., not recording exclusionary medical history or prohibited concomitant medications or treatments; omitting data so that a statistical analysis yields a result that would not have been obtained had all data been analyzed)

Although the examples above are each characterized as a particular type of falsification of data, we recognize that even these examples can fall into one or more categories. Because instances of falsification of data might fall into one or more of these categories, sponsors would not need to specifically characterize the falsification (e.g., creating, recording, altering, or omitting data) in the reports they would be required to submit to us.

E. Would Sponsors Be Required to Report Errors Under This Proposed Rule?

Errors, which can include, as noted in the proposed codified language, typographical errors and transposed numbers or characters, should not be reported under this proposed rule. The proposed rule is designed to address falsification of data rather than unintentional errors in recording and reporting information for several reasons:

- Falsification is more difficult for FDA to detect than errors during the normal inspectional process, in part because persons who engage in falsification are more likely to attempt to conceal their actions.
- Persons who engage in falsification of data often repeat that conduct when they are participating in multiple studies that affect multiple sponsors, so the impact of the conduct is often greater than that for errors.
- Although significant errors could potentially compromise the integrity of data submitted to FDA, it is more likely that these errors will be addressed through FDA inspections, sponsor monitoring activities, and the agency's application review processes than is the case with falsification of data.
- Requiring sponsors to report every observed error in data recording and processing could overwhelm the agency with information, much of which would already be detected through the activities noted above and would ultimately be of little concern with respect to the safety or effectiveness of regulated products.

For these reasons, at this time we are proposing to exclude errors from the proposed reporting requirement to best utilize the agency's resources.

We also are soliciting comments on whether we should include additional descriptions of what we consider "errors" and, if so, what would be specific examples of such errors.

F. Would a Sponsor Be Required to Report Possible Falsification?

The proposed codified language includes the phrase "has, or may have, engaged in the falsification of data" to make clear that the sponsor is required to report not only confirmed, but also possible, falsification. It is not always possible for an observer to know the intent of a person who may have falsified data. The proposed rule would not require a sponsor to determine definitively that data have been falsified, nor would the proposed rule require that a sponsor determine the intent of the person who has, or may have, falsified data. Rather, a sponsor would be required to report information of which it is aware suggesting that a person has, or may have, engaged in the falsification of data in connection with studies conducted by, or on behalf of, the sponsor, or relied on by the sponsor. This reporting obligation would exist regardless of the amount of evidence, if any, the sponsor has with regard to the intent of the person who has, or may have, falsified data.

We purposely are not proposing to specify in the regulations any particular information threshold that must be met before the reporting requirements are triggered, such as the exact form, quantity, or reliability of information about possible falsification that would require a sponsor to report to FDA. We do not believe that it is feasible to codify all forms of information on possible falsification (e.g., discovery of possibly altered document, report by coworker, complaint by study subject) or specify a quantity of information that would constitute a minimum threshold for sponsor reporting, and we do not want to inadvertently exclude information that, upon further investigation by the agency, could help uncover falsification. However, we invite comment on whether the regulation should specify some form of evidentiary standard or minimum threshold, such as what form(s) or quantity of information is needed to create a requirement to report and, if so, what the standard should be (see also section IX of this document).

G. How Will FDA Use This Information?

FDA would determine whether further agency investigation is warranted based on the information reported under this proposed rule in

conjunction with other information available to us. These investigations, in turn, might form the basis of administrative or enforcement actions, such as excluding clinical trials from consideration by FDA, placing a clinical trial on hold, or initiating disqualification of investigators or criminal proceedings.

Although a single sponsor may have only a small amount of information about a particular person or incident, the reporting that would be required by this proposed rule, independently or when aggregated with reports from other sources, may provide sufficient information from multiple sources about a person or situation to indicate that FDA should conduct an investigation. FDA would determine whether further agency investigation is warranted based on the information reported under this proposed rule in conjunction with other information available to FDA. Sponsors should therefore not wait to determine conclusively whether falsification actually occurred, or seek to determine the circumstances that led to it, before reporting this information to FDA.

The intent of this proposed requirement is for FDA to obtain information about possible falsification as soon as possible, with the full recognition that further investigation may be needed to substantiate allegations of possible falsification before any administrative or enforcement actions are taken. The act of being reported to FDA for possible data falsification would not necessarily mean that falsification had occurred or that the agency would make such a determination. The information likely would be assessed in light of the existing legal and regulatory framework and, as appropriate, would be considered in the context of administrative or enforcement proceedings. Persons suspected of data falsification would be entitled to the legal and procedural rights that would typically apply in any such administrative or enforcement proceedings.

Early reporting by sponsors could alert FDA to conditions that may affect data integrity and the rights, safety, and welfare of subjects. This reporting requirement would have the effect of providing FDA with an early alert to potentially serious lapses in subject protection or data integrity. If FDA were made aware of possible falsification of data sooner, FDA could undertake appropriate action, such as reviewing other studies conducted by the persons who have, or may have, falsified data to assess the reliability of the data and/or conducting site inspections.

H. What Information Should Sponsors Include in the Required Report to FDA?

The proposed rule would require the sponsor to report to FDA information it possesses regarding the possible falsification of data. The information a sponsor should report to FDA includes the following:

- The name of the person who has, or may have, falsified data;
- The last known address(es) and phone number(s) of that person;
- The specific identity of the potentially affected study, including, when applicable, application information such as the application number, investigational protocol number, study title, study site(s), and study dates; and
- Information suggesting that falsification occurred and describing the falsification. A sponsor may provide this information by any means, including telephone, mail, electronic mail, or facsimile.

We are considering whether additional information should be included in the report to FDA. One such element could be the National Clinical Trial (NCT) number assigned to a study when an applicable clinical trial is registered with ClinicalTrials.gov. We also are considering whether the regulations should specify what information about possible falsification must be reported to FDA.

Although the proposal would require only sponsors to report information about possible falsification of data, FDA also encourages other persons to report such information. FDA reminds sponsor-investigators that they would be responsible for reporting falsification of data under this proposed rule because they must adhere to the requirements applicable to both sponsors and investigators.

I. How Does a Sponsor Become Aware of Data Falsification?

There are many ways a sponsor can become aware of possible falsification, including, but not limited to, monitoring the conduct of studies, reviewing and evaluating study data (e.g., noticing unusual data in case report forms and/or analytical reports), and receiving complaints from employees or former employees.

J. When Would a Sponsor Be Required to Report Information About Falsification of Data?

The agency is proposing to require sponsors to report information regarding falsification of data "promptly," but no later than 45 calendar days after the sponsor becomes aware of the information. It is important for FDA to receive information about the falsification of data in a timely manner to ensure protection of the integrity of data reviewed by the agency and protection of subjects. We believe that 45 calendar days would provide a sponsor a reasonable amount of time to review the information and report any actual or suspected falsification to FDA. The proposed requirement for a sponsor to report information regarding falsification of data would be ongoing and cover the periods before and after study completion, including after the review, approval, or authorization of the affected product or labeling.

K. What Are the Consequences of Not Reporting Confirmed or Possible Falsification?

Failure to report possible falsification of data might constitute a violation of section 301(e) of the Federal Food, Drug, and Cosmetic Act (the act) (21 U.S.C. 331(e)) (concerning failure to make a required report) or 18 U.S.C. 1001 (concerning the submission of a false statement to the Federal government).

L. Whom Would a Sponsor Inform About Falsification?

As proposed, a sponsor would be required to report information it discovered regarding falsification of data to the appropriate FDA center. For investigations involving a combination product, the sponsor should report information on falsification to the FDA center that has primary jurisdiction for the premarket review and regulation of the product.

Current contact information for each center is listed below as follows:

Center for Biologics Evaluation and Research (CBER): Office of Compliance and Biologics Quality (HFM–650), Division of Inspections and Surveillance, Center for Biologics Evaluation and Research, FDA, 1401 Rockville Pike, rm. 200N, Rockville, MD 20852–1448, 301–827–6221, FAX 301–827–6748.

Center for Devices and Radiological Health (CDRH): Office of Compliance, Division of Bioresearch Monitoring (HFZ–310), Center for Devices and Radiological Health, FDA, 10903 New Hampshire Ave., Bldg. 66, rm. 3444, Silver Spring, MD 20993–0002, 301–796–5490, FAX 301–847–8136.

Center for Drug Evaluation and Research (CDER): Division of Scientific Investigations, Office of Compliance, Center for Drug Evaluation and Research, FDA, 10903 New Hampshire Ave., Bldg. 51, rm. 5311, Silver Spring, MD 20993–0002, 301–796–3150, FAX 301–847–8748.

Center for Food Safety and Applied Nutrition (CFSAN): Office of Compliance, Division of Enforcement (HFS–605), Center for Food Safety and Applied Nutrition, FDA, 5100 Paint Branch Pkwy., College Park, MD 20740–3835, 301–436–2417, FAX 301–436–2656.

Center for Veterinary Medicine (CVM): Office of Surveillance and Compliance, Division of Compliance (HFV–230), Center for Veterinary Medicine, FDA, 7500 Standish Pl., Rockville, MD 20850, 240–276–9200, FAX 240–276–9241.

Office of Regulatory Affairs (ORA): Office of Enforcement (HFC–230), FDA, 15800 Crabbs Branch Way, Rockville, MD 20855, 240–632–6853.

M. What Is the Proposed Definition of "Data" for the Purposes of This Proposal?

In this proposal, the term "data" includes, but is not limited to, individual facts, tests, specimens, samples, results, statistics, items of information, or statements made by individuals. This proposed rule would apply to data from studies conducted by or on behalf of a sponsor or relied on by a sponsor. Thus, it would apply not only to data from studies conducted by a sponsor, but also to data from studies not sponsored or conducted by a sponsor but cited in a petition, new dietary ingredient notification, or application to FDA in support of a claim, product marketing, or other regulatory action such as reclassification of a device.

N. Why Does FDA Want to Issue This Proposal Given Existing Regulations on Research Misconduct?

The Public Health Service (PHS) regulations at 42 CFR part 93 and the National Science Foundation (NSF) regulations at 45 CFR part 689 address "research misconduct." The PHS research misconduct regulations generally apply to PHS-conducted or PHS-supported biomedical and behavioral research, research training, research-related activities, and applications and proposals for such PHS-supported research, research training, and related activities. The NSF regulations on research misconduct address research proposals submitted to NSF and funded by NSF. As a result, neither of these regulations encompasses sufficiently the scope of research subject to evaluation by FDA.[4] FDA's proposed rule is intended to cover all studies that are subject to FDA evaluation, regardless of the source of funding.

Furthermore, FDA is not adopting any definition of "research misconduct" for the purpose of this proposal for two additional reasons. First, FDA's proposed definition of "falsification of data" describes the kinds of falsification of data that the agency has actually encountered that can affect both application reviews and the safety of subjects. Second, the PHS and NSF research misconduct regulations include the category "plagiarism" in the definitions of "research misconduct." Although plagiarism is an important issue in the context of Federal research grants and contracts, it is an area generally outside the scope of FDA compliance oversight. Accordingly, FDA is proposing to not include plagiarism in the category of activity that would trigger reporting under the proposed rule.

O. Why Is FDA Proposing to Change the Section Heading of § 312.56?

FDA is proposing to change the section heading of § 312.56 from "Review of ongoing investigations" to "Review of ongoing investigations; reporting falsification of data" to reflect the addition of this proposed reporting requirement to this section.

P. Why Is FDA Proposing to Renumber § 58.217 to § 58.12?

FDA is proposing to renumber § 58.217 to § 58.12 to place sponsor responsibilities under the regulations in consecutive sections. The proposed revisions to the language in current § 58.217 include changing the first sentence to read "subpart K of this part" instead of "this subpart" and several minor plain language edits.

Q. Why Is FDA Not Proposing to Amend Parts 314, 514, 601, and 814?

We recognize that the applicant (under 21 CFR parts 314, 514, 601, 807, and 814) is not always the sponsor for a given study and that arrangements between sponsors and applicants can sometimes be complex. We currently believe that sponsors are in the best position to detect and report falsification of data as described in this proposal. However, this proposal does not relieve applicants of any responsibilities under applicable statutes and regulations (e.g., parts 314, 514, 601, 807, and 814). It may be appropriate to extend the reporting requirements described in this proposed rule to nonsponsor applicants if we have reason to believe that they are also in a position to discover falsification of data described in this proposed rule and that existing statutes and regulations are not adequate to capture this information. Therefore, we request comment on whether we should require nonsponsor applicants to comply with the requirements in the proposed rule and whether such applicants are in a position to discover falsification of data.

III. Environmental Impact

The agency has determined under 21 CFR 25.30(h) that this action is of a type that does not individually or cumulatively have a significant effect on the human environment. Therefore, neither an environmental assessment nor an environmental impact statement is required.

IV. Legal Authority

FDA is proposing this rule under the authority granted to it by the act (21 U.S.C. 301 *et seq.*) and the Public Health Service Act (PHS Act) (42 U.S.C. 201 *et seq.*). By delegation from the Secretary of the Department of Health and Human Services (the Secretary), FDA is authorized to issue regulations for the efficient enforcement of the act (21 U.S.C. 371). Any final rule upon which this proposal is based would help with the efficient enforcement of provisions relating to the following: (1) Investigational use of human drugs, animal drugs, biologics, and devices; (2) investigational and approved use of food additives and color additives; (3) safety and, as appropriate, effectiveness of human and animal drugs, biological products, and medical devices; (4) accuracy of a health claim or nutrient content claim in food labeling; and (5) establishing that a new dietary ingredient will reasonably be expected to be safe.

FDA may require the establishment and maintenance of such records, and the making of such reports to FDA, of data obtained as a result of the investigational use of an animal drug (21 U.S.C. 360b(j)), a biologic (42 U.S.C. 262(a)(3)), a device (21 U.S.C. 360j(g)(2)(B)(ii)), a human drug (21 U.S.C. 355(i)), a food additive (21 U.S.C. 348(b), (j), and (h)), or a color additive (21 U.S.C. 379e(b)). FDA may require the submission of balanced information, which is necessary for FDA to evaluate: The safety of a food additive (21 U.S.C. 348), the safety and suitability of a color additive (21 U.S.C. 379e), the accuracy of a health claim or nutrient content claim in food labeling (21 U.S.C. 343(r)(2)(A), (r)(3)(B)), and the basis on which a manufacturer or distributor concluded that a new dietary ingredient will reasonably be expected to be safe

[4] References made in this proposed rule to "research" and "studies" that are "subject to evaluation by FDA" include research and studies that are otherwise within the scope of the codified provisions in this proposed rule.

(21 U.S.C. 350b(a)(2)). FDA may also require the establishment and maintenance of such records, and the making of such reports to FDA, as are necessary to determine whether there are, or may be, grounds to withdraw the approval or authorization of an animal drug (21 U.S.C. 360b(l)), a biologic (42 U.S.C. 262(a)(2)(A)), a device (21 U.S.C. 360i), a human drug (21 U.S.C. 355(k)), a food additive (21 U.S.C. 348), a color additive (21 U.S.C. 379e), a health claim (21 U.S.C. 343(r)(2)(A)), or a nutrient content claim (21 U.S.C. 343(r)(2)(B)), or when reasonably necessary to determine that a dietary supplement containing a new dietary ingredient may no longer meet the provisions in 21 U.S.C. 350b(a)(2).

Moreover, other provisions, such as 21 U.S.C. 355(i), 42 U.S.C. 262, and 21 U.S.C. 360b(j) and 360j(g)(2), confer broad authority upon the Secretary (and, by delegation, to FDA) to issue regulations governing the investigational use of new drugs, biologics, new animal drugs, and devices to protect the rights, safety, and welfare of subjects and otherwise protect the public health. Other provisions, such as 21 U.S.C. 355(b) to (d), 360b(b) to (d), 360e(2)(A), and 360e(c)(1), give the agency the authority to obtain the information we need to adequately assess the safety and effectiveness of drugs and devices. In determining whether a drug or device is "safe for use" under the conditions proposed, the agency may consider not only information such as data from studies, but also "any other information" or "new information" before the agency relevant to the approval decisions under 21 U.S.C. 355(d), 360b(d), and 360e(d)(2). The language in 21 U.S.C. 355(d), 360b(d), and 360e(c)(1) is intended to help ensure that consumers are not exposed to products for which safety and effectiveness have not been demonstrated.

Similarly, 21 U.S.C. 360e gives the agency the authority to obtain the information we need to determine whether a premarket approval application provides reasonable assurances of the safety and effectiveness of a device. Under 21 U.S.C. 360c(i), persons submitting premarket notifications are required to submit a summary of any information respecting safety and effectiveness or state that such information will be made available upon request.

In addition, under 21 U.S.C. 355(e), 360b(e)(1), and 360e(e)(1), approval of an application is to be withdrawn if, inter alia, new information shows that the drug or device is unsafe or has not been shown to be either safe or effective under the conditions of use.

As discussed previously, the proposal, when final, would help efficiently enforce provisions relating to: (1) The safety and, as appropriate, effectiveness of human and animal drugs, biological products, and medical devices; (2) the safety of food additives and new dietary ingredients; (3) the safety and suitability of color additives; and (4) the accuracy of nutrient content claims and health claims. FDA believes the proposal would help prevent the use of falsified data in evaluating the safety and, as appropriate, suitability, accuracy, or effectiveness of such products. The proposed changes would also help to protect research subjects.

Provisions for misbranding (21 U.S.C. 352 and 343) and adulteration (21 U.S.C. 351 and 342) also provide authority for issuance of these regulations.

V. Proposed Implementation Plan

FDA proposes that any final rule that may issue based on this proposal become effective 90 days after the date of publication in the **Federal Register**.

VI. Analysis of Impacts

FDA has examined the impacts of the proposed rule under Executive Order 12866, the Regulatory Flexibility Act (5 U.S.C. 601–612), and the Unfunded Mandates Reform Act of 1995 (Public Law 104–4). Executive Order 12866 directs agencies to assess all costs and benefits of available regulatory alternatives and, when regulation is necessary, to select regulatory approaches that maximize net benefits (including potential economic, environmental, public health and safety, and other advantages; distributive impacts; and equity). The agency believes that this proposed rule is not an economically significant regulatory action as defined by the Executive order.

The Regulatory Flexibility Act requires agencies to analyze regulatory options that would minimize any significant impact of the rule on small entities. Because most firms would not generally submit more than one report of potential data falsification per year at the estimated cost of only $210 per report, the agency does not believe that this proposed rule would have a significant economic impact on a substantial number of small entities.

Section 202(a) of the Unfunded Mandates Reform Act of 1995 requires that agencies prepare a written statement, which includes an assessment of anticipated costs and benefits, before proposing "any rule that includes any Federal mandate that may result in the expenditure by State, local, and tribal governments, in the aggregate, or by the private sector, of $100,000,000 or more (adjusted annually for inflation) in any one year." The current threshold after adjustment for inflation is $133 million, using the most current (2008) Implicit Price Deflator for the Gross Domestic Product. FDA does not expect this proposed rule to result in any 1-year expenditure that would meet or exceed this amount.

The proposed rule would amend FDA's regulations to require sponsors to report information indicating that any person has, or may have, falsified data in the course of reporting study results, or in the course of proposing, designing, performing, recording, supervising, or reviewing studies conducted by or on behalf of a sponsor or relied on by a sponsor. For the purpose of this proposal, "falsification of data" means creating, altering, recording, or omitting data in such a way that the data do not represent what actually occurred. Sponsors would be required to report this information to the appropriate FDA center promptly, but no later than 45 calendar days after the sponsor becomes aware of the information.

A. Benefits

The benefits of the changes being proposed would be the decreased likelihood that FDA would rely on falsified data for product reviews and approvals, or for authorization of certain labeling claims. The proposed changes would also decrease the likelihood of harm to research subjects by making it less likely that clinical studies would begin or continue if falsified data from nonclinical laboratory studies were reported. The proposed changes would also prevent researchers who falsify data from continuing studies, coming in contact with research subjects, or jeopardizing the safety of such subjects through unsound scientific practices.

B. Costs

Regulatory costs will reflect the added paperwork cost of submitting the information reports. Given the great flexibility provided in the manner in which the reports can be made, FDA believes that they will be simple to complete. Therefore, FDA estimates that it will take about 5 hours to prepare and report this information to the agency. The agency is uncertain of the average number of these reports to expect annually. As explained in section VII of this document, the agency estimates that it may receive 73 reports per year in compliance with this rule (see Table 1.—Estimated Annual Reporting

Burden). FDA is basing this estimate on several types of information, including reports received from sponsors of errors and reports of suspensions and terminations of clinical investigators. Because most errors do not involve falsification and because investigators may be suspended or terminated for reasons other than for falsifying data, this estimate of 73 reports is likely to be greater than the number the agency would actually receive. At a benefit-adjusted hourly wage rate of about $42 for a regulatory affairs official, these assumptions imply a total annual cost of about $15,330 per year.[5] As mentioned previously, the agency expects the total number of reports of falsified data, and therefore the total cost, to be lower. Although a small number of firms may submit more than one report in a year, most firms would not generally submit more than one report per year. At an estimated cost of only about $210 per report, the agency concludes that the proposed rule would not have a significant economic impact on a substantial number of small entities. The Unfunded Mandates Reform Act of 1995 does not require FDA to prepare a statement of costs and benefits for the proposed rule, because the proposed rule is not expected to result in any 1-year expenditure that would meet or exceed $100 million adjusted for inflation. The current inflation-adjusted statutory threshold is $133 million.

VII. Paperwork Reduction Act of 1995

This proposed rule contains information collection requirements that are subject to review by the Office of Management and Budget (OMB) under the Paperwork Reduction Act of 1995 (44 U.S.C. 3501–3520) (the PRA). Collections of information include any request or requirement that persons obtain, maintain, retain, or report information to the agency, or disclose information to a third party or to the public (44 U.S.C. 3502(3) and 5 CFR 1320.3(c)). A description of the information collection requirements included in this proposed rule is given below with an estimate of the annual reporting burden. Included in this estimate is the time for reviewing instructions, searching existing data sources, gathering and maintaining the data needed, and completing and reviewing each collection of information.

FDA invites comments on: (1) Whether the proposed collection of information is necessary for the proper performance of FDA's functions, including whether the information will have practical utility; (2) the accuracy of FDA's estimate of the burden of the proposed collection of information, including the validity of the methodology and assumptions used; (3) ways to enhance the quality, utility, and clarity of the information to be collected; and (4) ways to minimize the burden of the collection of information on respondents, including through the use of automated collection techniques, when appropriate, and other forms of information technology.

Title: Reporting Information Regarding Falsification of Data.

Description: FDA is proposing to amend its regulations on review of studies to require sponsors to report information indicating that any person has, or may have, engaged in the falsification of data in the course of reporting study results, or in the course of proposing, designing, performing, recording, supervising, or reviewing studies conducted by or on behalf of a sponsor or relied on by a sponsor. The sponsor would be required to report this information to the appropriate FDA center promptly, but no later than 45 calendar days after the sponsor becomes aware of the information. For the purpose of this proposal, "falsification of data" means creating, altering, recording, or omitting data in such a way that the data do not represent what actually occurred.

FDA believes that this proposal is necessary because ambiguity in the current regulations has caused considerable confusion among sponsors. FDA intends to make it absolutely clear that sponsors would be required to report information pertaining to the possible falsification of data as described in this proposal. This proposal is intended to help ensure the integrity of data received by FDA in support of applications and petitions for product approval and authorization of certain labeling claims and to help protect research subjects. In addition, this proposal would protect research subjects by making it less likely that falsified nonclinical laboratory studies would be relied on by the agency and that researchers who falsify data could continue to conduct studies, come in contact with research subjects, and/or jeopardize the rights, safety, and welfare of such subjects through unsound scientific practices.

Based on data concerning the number of reports of falsification received annually by FDA, FDA estimates that it will receive approximately 73 reports of falsification of data per year. FDA bases this estimate on the fact that CDER receives approximately 20 reports a year from sponsors, CBER receives approximately 30 per year, and CDRH receives approximately 15. There are approximately three incidents a year concerning nonclinical laboratory studies. CFSAN receives approximately three reports a year concerning food additive petitions and color additive petitions. CFSAN has received no reports concerning nutrient content claims, health claims, or new dietary ingredients. CVM receives approximately two reports a year.

FDA estimates that it will take approximately 5 hours to prepare and submit to FDA each report. FDA bases this estimate on the time it would take a sponsor to gather the information to report to FDA, contact FDA to report the information, and meet with FDA to present the report, if necessary.

The reporting burden posed by the proposed rule is considerably less than the burden posed by the PHS research misconduct regulations, primarily because the proposed rule would require fewer specific actions by sponsors. The PRA section of the final rule on the PHS research misconduct regulations (70 FR 28370, 28382 to 28384; May 17, 2005) describes the extensive efforts that a research institution must undertake to investigate and document research misconduct, including promptly taking custody of all records and evidence, performing an inventory of these items, and sequestering them, as well as taking custody of additional records and evidence discovered during the course of a research misconduct proceeding. FDA's proposed rule on falsification would not require extensive investigation, documentation, and recordkeeping, but rather would simply require reporting of known or potential data falsification when a sponsor becomes aware of information indicating that such activity may have occurred. This would impose a substantially lesser burden than that created by the PHS rule.

Description of Respondents: Persons and businesses, including small businesses and manufacturers.

[5] 2004 National Industry-Specific Occupational Employment and Wage Estimates, US Department of Labor, Bureau of Labor Statistics (*www.bls.gov/oes/current/naics4_325400.htm*); compliance officer wage rate for pharmaceutical and medicine manufacturing (NAICS 325400) plus a 30-percent increase for benefits.

TABLE 1.—ESTIMATED ANNUAL REPORTING BURDEN[1]

21 CFR Section	No. of Respondents	Annual Frequency per Response	Total Annual Responses	Hours per Response	Total Hours
58.11(a)	3	1	3	5	15
71.1(k)	1	1	1	5	5
101.69(p)	0	0	0	0	0
101.70(k)	0	0	0	0	0
170.101(f)	1	1	1	5	5
171.1(o)	1	1	1	5	5
190.6(g)	0	0	0	0	0
312.56(e)	50	1	50	5	250
511.1(c)(1)	2	1	2	5	10
571.1(l)	0	0	0	0	0
812.46(d)	15	1	15	5	75
Total	73	7	73	35	365

[1] There are no capital costs or operating and maintenance costs associated with this collection of information.

In compliance with the Paperwork Reduction Act of 1995 (44 U.S.C. 3507(d)), the agency has submitted the information collection provisions of this proposed rule to OMB for review. Interested persons are requested to send comments regarding this information collection to the Office of Information and Regulatory Affairs, OMB (see **ADDRESSES**).

Before this proposed rule becomes final, FDA will publish a notice in the **Federal Register** announcing OMB's decision to approve, modify, or disapprove the information collection provisions in the final rule. An agency may not conduct or sponsor, and a person is not required to respond to, a collection of information unless the information collection displays a current OMB control number.

VIII. Federalism

FDA has analyzed this proposed rule in accordance with the principles set forth in Executive Order 13132. FDA has determined that the proposed rule does not contain policies that have substantial direct effects on the States, on the relationship between the National Government and the States, or on the distribution of power and responsibilities among the various levels of government. Accordingly, the agency has concluded that the proposed rule does not contain policies that have federalism implications as defined in the Executive order and, consequently, a federalism summary impact statement is not required.

IX. Request for Comments

In addition to requesting general comments on the proposed rule, FDA has also identified several specific issues on which it invites public comment. The public comments will help FDA decide whether additional revisions to the proposed regulations are needed. The issues are as follows:

(1) We welcome comments concerning the definition of "falsification of data."

(2) The proposed rule states that the information should be reported to FDA "promptly," but no later than 45 calendar days after the sponsor becomes aware of the information. We believe that 45 calendar days would provide a sponsor a reasonable amount of time to review the information to determine if it must be reported to FDA. However, we welcome comments on whether this timeframe is appropriate.

(3) Although we have not proposed to amend regulations related to marketing applications (i.e., parts 314, 514, 807, and 814), we invite comments as to whether we should amend these regulations to require applicants to report possible falsification of data.

(4) We invite comments on whether the proposed rule should specify an evidentiary standard or threshold, such as a certain form or quantity of information that a sponsor must be aware of before the sponsor would be required to report possible falsification of data.

(5) We invite comments on whether we should include additional descriptions of what we consider "errors" (beyond the listing of examples such as typographical errors and transposed numbers or characters) that sponsors would not be required to report.

(6) We invite comments on the information that should be provided to FDA when a sponsor reports possible falsification of data, as well as on whether the regulations should specify what information must be reported.

Interested persons may submit to the Division of Dockets Management (see **ADDRESSES**) written or electronic comments on this proposal. Submit a single copy of electronic comments or two paper copies of any mailed comments, except that individuals may submit one paper copy. Comments are to be identified with the docket number found in brackets in the heading of this document. Received comments may be seen in the Division of Dockets Management between 9 a.m. and 4 p.m., Monday through Friday.

List of Subjects

21 CFR Part 16

Administrative practice and procedure.

21 CFR Part 58

Laboratories, Reporting and recordkeeping requirements.

21 CFR Part 71

Administrative practice and procedure, Color additives, Confidential business information, Cosmetics, Drugs,

Reporting and recordkeeping requirements.

21 CFR Part 101

Food labeling, Nutrition, Reporting and recordkeeping requirements.

21 CFR Part 170

Administrative practice and procedure, Food additives, Reporting and recordkeeping requirements.

21 CFR Part 171

Administrative practice and procedure, Food additives.

21 CFR Part 190

Dietary foods, Foods, Food additives, Reporting and recordkeeping requirements.

21 CFR Part 312

Drugs, Exports, Imports, Investigations, Labeling, Medical research, Reporting and recordkeeping requirements, Safety.

21 CFR Part 511

Animal drugs, Medical research, Reporting and recordkeeping requirements.

21 CFR Part 571

Administrative practice and procedure, Animal feeds, Animal foods, Food additives.

21 CFR Part 812

Health records, Medical devices, Medical research, Reporting and recordkeeping requirements.

Therefore, under the Federal Food, Drug, and Cosmetic Act and the Public Health Service Act, and under authority delegated to the Commissioner of Food and Drugs, it is proposed that 21 CFR parts 16, 58, 71, 101, 170, 171, 190, 312, 511, 571, and 812 be amended as follows:

PART 16—REGULATORY HEARING BEFORE THE FOOD AND DRUG ADMINISTRATION

1. The authority citation for 21 CFR part 16 continues to read as follows:

Authority: 15 U.S.C. 1451–1461; 21 U.S.C. 141–149, 321–394, 467f, 679, 821, 1034; 28 U.S.C. 2112; 42 U.S.C. 201–262, 263b, 364.

§ 16.1 [Amended]

2. Section 16.1 is amended in paragraph (b)(2) by removing "511.1(c)(1)" and adding in its place "511.1(d)(1)" and by removing the phrase "511.1(c)(4) and (d)" and adding in its place the phrase "511.1(d)(4) and (e)".

PART 58—GOOD LABORATORY PRACTICE FOR NONCLINICAL LABORATORY STUDIES

3. The authority citation for 21 CFR part 58 continues to read as follows:

Authority: 21 U.S.C. 342, 346, 346a, 348, 351, 352, 353, 355, 360, 360b–360f, 360h–360j, 371, 379e, 381; 42 U.S.C. 216, 262, 263b–263n.

4. Section 58.11 is added to subpart A to read as follows:

§ 58.11 Reporting falsification of data.

(a) When a sponsor becomes aware of information indicating that any person has, or may have, engaged in the falsification of data in the course of reporting study results, or in the course of proposing, designing, performing, recording, supervising, or reviewing studies conducted by or on behalf of a sponsor or relied on by a sponsor involving studies subject to this part, the sponsor must report this information to FDA. A sponsor must report this information regardless of whether the sponsor has evidence as to the intent of the person who has, or may have, falsified data. The sponsor must report this information to FDA promptly, but no later than 45 calendar days after the sponsor becomes aware of the information. For the purpose of this section only, the following definitions apply:

(1) *Falsification of data* means creating, altering, recording, or omitting data in such a way that the data do not represent what actually occurred. Examples of falsification of data include, but are not limited to, the following:

(i) Creating data that were never obtained (e.g., making up data or results and recording or reporting them; reporting enrollment in a study of a subject who did not exist; forging the signature on an informed consent form);

(ii) Altering data by replacing original data with something different that does not accurately reflect study conduct or results (e.g., changing a laboratory measurement to a less extreme deviation from normal);

(iii) Recording or obtaining data from a specimen, sample, or test whose origin is not accurately described or in a way that does not accurately reflect the data (e.g., changing the date of a specimen, sample, or test; adding a substance not called for in the study to a specimen or sample; identifying a specimen, sample, or test as coming from a specific subject when it came from a source other than the subject);

(iv) Omitting data that were obtained and would be appropriate for recording based on study design and conduct (e.g., not recording exclusionary medical history or prohibited concomitant medications or treatments; omitting data so that a statistical analysis yields a result that would not have been obtained had all data been analyzed).

(2) The term *data* includes, but is not limited to, individual facts, tests, specimens, samples, results, statistics, items of information, or statements made by individuals.

(b) Sponsors should not report errors (e.g., typographical errors, transposed numbers or characters) to FDA under this section.

5. Section 58.217 is transferred to subpart A and redesignated as § 58.12 and newly redesignated § 58.12 is revised to read as follows:

§ 58.12 Suspension or termination of a testing facility by a sponsor.

Termination of a testing facility by a sponsor is independent of, and neither in lieu of nor a precondition to, proceedings or actions authorized by subpart K of this part. If a sponsor terminates or suspends a testing facility from further participation in a nonclinical laboratory study that is being conducted as part of any application for a research or marketing permit that has been submitted to any Center of the Food and Drug Administration (whether approved or not), the sponsor must notify that center in writing within 15 working days of the action; the notice must include a statement of the reasons for such action. Suspension or termination of a testing facility by a sponsor does not relieve it of any obligation under any other applicable regulation to submit the results of the study to the Food and Drug Administration.

PART 71—COLOR ADDITIVE PETITIONS

6. The authority citation for 21 CFR part 71 continues to read as follows:

Authority: 21 U.S.C. 321, 342, 348, 351, 355, 360, 360b–360f, 360h–360j, 361, 371, 379e, 381; 42 U.S.C. 216, 262.

7. Section 71.1 is amended by adding paragraph (k) to read as follows:

§ 71.1 Petitions.

* * * * *

(k)(1) When a petitioner becomes aware of information indicating that any person has, or may have, engaged in the falsification of data in the course of reporting study results, or in the course of proposing, designing, performing, recording, supervising, or reviewing studies conducted by or on behalf of a petitioner, relied on by a petitioner, or otherwise cited in a petition under this

part, the petitioner must report this information to the Center for Food Safety and Applied Nutrition (Center). A petitioner must report this information regardless of whether the petitioner has evidence as to the intent of the person who has, or may have, falsified data. The petitioner must report this information to the Center promptly, but no later than 45 calendar days after the petitioner becomes aware of the information. For the purpose of this section only, the following definitions apply:

(i) *Falsification of data* means creating, altering, recording, or omitting data in such a way that the data do not represent what actually occurred. Examples of falsification of data include, but are not limited to, the following:

(A) Creating data that were never obtained (e.g., making up data or results and recording or reporting them; reporting enrollment in a study of a subject who did not exist; forging the signature on an informed consent form);

(B) Altering data by replacing original data with something different that does not accurately reflect study conduct or results (e.g., changing a laboratory measurement to a less extreme deviation from normal);

(C) Recording or obtaining data from a specimen, sample, or test whose origin is not accurately described or in a way that does not accurately reflect the data (e.g., changing the date of a specimen, sample, or test; adding a substance not called for in the study to a specimen or sample; identifying a specimen, sample, or test as coming from a specific subject when it came from a source other than the subject);

(D) Omitting data that were obtained and would be appropriate for recording based on study design and conduct (e.g., not recording exclusionary medical history or prohibited concomitant medications or treatments; omitting data so that a statistical analysis yields a result that would not have been obtained had all data been analyzed).

(ii) The term *data* includes, but is not limited to, individual facts, tests, specimens, samples, results, statistics, items of information, or statements made by individuals.

(2) Petitioners should not report errors (e.g., typographical errors, transposed numbers or characters) to FDA under paragraph (k) of this section.

PART 101—FOOD LABELING

8. The authority citation for 21 CFR part 101 continues to read as follows:

Authority: 15 U.S.C. 1453, 1454, 1455; 21 U.S.C. 321, 331, 342, 343, 348, 371; 42 U.S.C. 243, 264, 271.

9. Section 101.69 is amended by adding paragraph (p) to read as follows:

§ 101.69 Petitions for nutrient content claims.

* * * * *

(p)(1) When a petitioner becomes aware of information indicating that any person has, or may have, engaged in the falsification of data in the course of reporting study results, or in the course of proposing, designing, performing, recording, supervising, or reviewing studies conducted by or on behalf of a petitioner, relied on by a petitioner, or otherwise cited in a petition under this part, the petitioner must report this information to the Center for Food Safety and Applied Nutrition (Center). A petitioner must report this information regardless of whether the petitioner has evidence as to the intent of the person who has, or may have, falsified data. The petitioner must report this information to the Center promptly, but no later than 45 calendar days after the petitioner becomes aware of the information. For the purpose of this section only, the following definitions apply:

(i) *Falsification of data* means creating, altering, recording, or omitting data in such a way that the data do not represent what actually occurred. Examples of falsification of data include, but are not limited to, the following:

(A) Creating data that were never obtained (e.g., making up data or results and recording or reporting them; reporting enrollment in a study of a subject who did not exist; forging the signature on an informed consent form);

(B) Altering data by replacing original data with something different that does not accurately reflect study conduct or results (e.g., changing a laboratory measurement to a less extreme deviation from normal);

(C) Recording or obtaining data from a specimen, sample, or test whose origin is not accurately described or in a way that does not accurately reflect the data (e.g., changing the date of a specimen, sample, or test; adding a substance not called for in the study to a specimen or sample; identifying a specimen, sample, or test as coming from a specific subject when it came from a source other than the subject);

(D) Omitting data that were obtained and would be appropriate for recording based on study design and conduct (e.g., not recording exclusionary medical history or prohibited concomitant medications or treatments; omitting data so that a statistical analysis yields a result that would not have been obtained had all data been analyzed).

(ii) The term *data* includes, but is not limited to, individual facts, tests, specimens, samples, results, statistics, items of information, or statements made by individuals.

(2) Petitioners should not report errors (e.g., typographical errors, transposed numbers or characters) to FDA under paragraph (p) of this section.

10. Section 101.70 is amended by adding paragraph (k) to read as follows:

§ 101.70 Petitions for health claims.

* * * * *

(k)(1) When a petitioner becomes aware of information indicating that any person has, or may have, engaged in the falsification of data in the course of reporting study results, or in the course of proposing, designing, performing, recording, supervising, or reviewing studies conducted by or on behalf of a petitioner, relied on by a petitioner, or otherwise cited in a petition under this part, the petitioner must report this information to the Center for Food Safety and Applied Nutrition (Center). A petitioner must report this information regardless of whether the petitioner has evidence as to the intent of the person who has, or may have, falsified data. The petitioner must report this information to the Center promptly, but no later than 45 calendar days after the petitioner becomes aware of the information. For the purpose of this section only, the following definitions apply:

(i) *Falsification of data* means creating, altering, recording, or omitting data in such a way that the data do not represent what actually occurred. Examples of falsification of data include, but are not limited to, the following:

(A) Creating data that were never obtained (e.g., making up data or results and recording or reporting them; reporting enrollment in a study of a subject who did not exist; forging the signature on an informed consent form);

(B) Altering data by replacing original data with something different that does not accurately reflect study conduct or results (e.g., changing a laboratory measurement to a less extreme deviation from normal);

(C) Recording or obtaining data from a specimen, sample, or test whose origin is not accurately described or in a way that does not accurately reflect the data (e.g., changing the date of a specimen, sample, or test; adding a substance not called for in the study to a specimen or sample; identifying a specimen, sample, or test as coming from a specific subject

when it came from a source other than the subject);

(D) Omitting data that were obtained and would be appropriate for recording based on study design and conduct (e.g., not recording exclusionary medical history or prohibited concomitant medications or treatments; omitting data so that a statistical analysis yields a result that would not have been obtained had all data been analyzed).

(ii) The term *data* includes, but is not limited to, individual facts, tests, specimens, samples, results, statistics, items of information, or statements made by individuals.

(2) Petitioners should not report errors (e.g., typographical errors, transposed numbers or characters) to FDA under paragraph (k) of this section.

PART 170—FOOD ADDITIVES

11. The authority citation for 21 CFR part 170 continues to read as follows:

Authority: 21 U.S.C. 321, 341, 342, 346a, 348, 371.

12. Section 170.101 is amended by adding paragraph (f) to read as follows:

§ 170.101 Information in a premarket notification for a food contact substance (FCN).

* * * * *

(f)(1) When a manufacturer or supplier who submits a FCN becomes aware of information indicating that any person has, or may have, engaged in the falsification of data in the course of reporting study results, or in the course of proposing, designing, performing, recording, supervising, or reviewing studies conducted by or on behalf of a manufacturer or supplier, relied on by a manufacturer or supplier, or otherwise cited in the notification under this part, the manufacturer or supplier must report this information to the Center for Food Safety and Applied Nutrition (Center). A manufacturer or supplier must report this information regardless of whether the manufacturer or supplier has evidence as to the intent of the person who has, or may have, falsified data. The manufacturer or supplier must report this information to the Center promptly, but no later than 45 calendar days after the manufacturer or supplier becomes aware of the information. For the purpose of this section only, the following definitions apply:

(i) *Falsification of data* means creating, altering, recording, or omitting data in such a way that the data do not represent what actually occurred. Examples of falsification of data include, but are not limited to, the following:

(A) Creating data that were never obtained (e.g., making up data or results and recording or reporting them; reporting enrollment in a study of a subject who did not exist; forging the signature on an informed consent form);

(B) Altering data by replacing original data with something different that does not accurately reflect study conduct or results (e.g., changing a laboratory measurement to a less extreme deviation from normal);

(C) Recording or obtaining data from a specimen, sample, or test whose origin is not accurately described or in a way that does not accurately reflect the data (e.g., changing the date of a specimen, sample, or test; adding a substance not called for in the study to a specimen or sample; identifying a specimen, sample, or test as coming from a specific subject when it came from a source other than the subject);

(D) Omitting data that were obtained and would be appropriate for recording based on study design and conduct (e.g., not recording exclusionary medical history or prohibited concomitant medications or treatments; omitting data so that a statistical analysis yields a result that would not have been obtained had all data been analyzed).

(ii) The term *data* includes, but is not limited to, individual facts, tests, specimens, samples, results, statistics, items of information, or statements made by individuals.

(2) Manufacturers or suppliers should not report errors (e.g., typographical errors, transposed numbers or characters) to FDA under paragraph (f) of this section.

PART 171—FOOD ADDITIVE PETITIONS

13. The authority citation for 21 CFR part 171 continues to read as follows:

Authority: 21 U.S.C. 321, 342, 348, 371.

14. Section 171.1 is amended by adding paragraph (o) to read as follows:

§ 171.1 Petitions.

* * * * *

(o)(1) When a petitioner becomes aware of information indicating that any person has, or may have, engaged in the falsification of data in the course of reporting study results, or in the course of proposing, designing, performing, recording, supervising, or reviewing studies conducted by or on behalf of a petitioner, relied on by a petitioner, or otherwise cited in the petition under this part, the petitioner must report this information to the Center for Food Safety and Applied Nutrition (Center). A petitioner must report this information regardless of whether the petitioner has evidence as to the intent of the person who has, or may have, falsified data. The petitioner must report this information to the Center promptly, but no later than 45 calendar days after the petitioner becomes aware of the information. For the purpose of this section only, the following definitions apply:

(i) *Falsification of data* means creating, altering, recording, or omitting data in such a way that the data do not represent what actually occurred. Examples of falsification of data include, but are not limited to, the following:

(A) Creating data that were never obtained (e.g., making up data or results and recording or reporting them; reporting enrollment in a study of a subject who did not exist; forging the signature on an informed consent form);

(B) Altering data by replacing original data with something different that does not accurately reflect study conduct or results (e.g., changing a laboratory measurement to a less extreme deviation from normal);

(C) Recording or obtaining data from a specimen, sample, or test whose origin is not accurately described or in a way that does not accurately reflect the data (e.g., changing the date of a specimen, sample, or test; adding a substance not called for in the study to a specimen or sample; identifying a specimen, sample, or test as coming from a specific subject when it came from a source other than the subject);

(D) Omitting data that were obtained and would be appropriate for recording based on study design and conduct (e.g., not recording exclusionary medical history or prohibited concomitant medications or treatments; omitting data so that a statistical analysis yields a result that would not have been obtained had all data been analyzed).

(ii) The term *data* includes, but is not limited to, individual facts, tests, specimens, samples, results, statistics, items of information, or statements made by individuals.

(2) Petitioners should not report errors (e.g., typographical errors, transposed numbers or characters) to FDA under paragraph (o) of this section.

PART 190—DIETARY SUPPLEMENTS

15. The authority citation for 21 CFR part 190 is revised to read as follows:

Authority: 21 U.S.C. 321(ff), 331, 342, 350(b), 371.

16. Section 190.6 is amended by adding paragraph (g) to read as follows:

§ 190.6 Requirement for premarket notification.

* * * * *

(g)(1) When a manufacturer or distributor who submits a notification becomes aware of information indicating that any person has, or may have, engaged in the falsification of data in the course of reporting study results, or in the course of proposing, designing, performing, recording, supervising, or reviewing studies conducted by or on behalf of a manufacturer or distributor, relied on by a manufacturer or distributor, or otherwise cited in the petition under this part, the manufacturer or distributor must report this information to the Center for Food Safety and Applied Nutrition (Center). A manufacturer or distributor must report this information regardless of whether the manufacturer or distributor has evidence as to the intent of the person who has, or may have, falsified data. The manufacturer or distributor must report this information to the Center promptly, but no later than 45 calendar days after the manufacturer or distributor becomes aware of the information. For the purpose of this section only, the following definitions apply:

(i) *Falsification of data* means creating, altering, recording, or omitting data in such a way that the data do not represent what actually occurred. Examples of falsification of data include, but are not limited to, the following:

(A) Creating data that were never obtained (e.g., making up data or results and recording or reporting them; reporting enrollment in a study of a subject who did not exist; forging the signature on an informed consent form);

(B) Altering data by replacing original data with something different that does not accurately reflect study conduct or results (e.g., changing a laboratory measurement to a less extreme deviation from normal);

(C) Recording or obtaining data from a specimen, sample, or test whose origin is not accurately described or in a way that does not accurately reflect the data (e.g., changing the date of a specimen, sample, or test; adding a substance not called for in the study to a specimen or sample; identifying a specimen, sample, or test as coming from a specific subject when it came from a source other than the subject);

(D) Omitting data that were obtained and would be appropriate for recording based on study design and conduct (e.g., not recording exclusionary medical history or prohibited concomitant medications or treatments; omitting data so that a statistical analysis yields a result that would not have been obtained had all data been analyzed).

(ii) The term *data* includes, but is not limited to, individual facts, tests, specimens, samples, results, statistics, items of information, or statements made by individuals.

(2) Manufacturers or distributors should not report errors (e.g., typographical errors, transposed numbers or characters) to FDA under paragraph (g) of this section.

PART 312—INVESTIGATIONAL NEW DRUG APPLICATION

17. The authority citation for 21 CFR part 312 continues to read as follows:

Authority: 21 U.S.C. 321, 331, 351, 352, 353, 355, 356, 371, 381, 382, 383, 393; 42 U.S.C. 262.

18. Section 312.56 is amended by revising the section heading and by adding new paragraph (e) to read as follows:

§ 312.56 Review of ongoing investigations; reporting falsification of data.

* * * * *

(e)(1) When a sponsor becomes aware of information indicating that any person has, or may have, engaged in the falsification of data in the course of reporting study results, or in the course of proposing, designing, performing, recording, supervising, or reviewing studies conducted by or on behalf of a sponsor or relied on by a sponsor involving studies subject to this part, the sponsor must report this information to the Center for Drug Evaluation and Research (Center). A sponsor must report this information regardless of whether the sponsor has evidence as to the intent of the person who has, or may have, falsified data. The sponsor must report this information to the Center promptly, but no later than 45 calendar days after the sponsor becomes aware of the information. For the purpose of this section only, the following definitions apply:

(i) *Falsification of data* means creating, altering, recording, or omitting data in such a way that the data do not represent what actually occurred. Examples of falsification of data include, but are not limited to, the following:

(A) Creating data that were never obtained (e.g., making up data or results and recording or reporting them; reporting enrollment in a study of a subject who did not exist; forging the signature on an informed consent form);

(B) Altering data by replacing original data with something different that does not accurately reflect study conduct or results (e.g., changing a laboratory measurement to a less extreme deviation from normal);

(C) Recording or obtaining data from a specimen, sample, or test whose origin is not accurately described or in a way that does not accurately reflect the data (e.g., changing the date of a specimen, sample, or test; adding a substance not called for in the study to a specimen or sample; identifying a specimen, sample, or test as coming from a specific subject when it came from a source other than the subject);

(D) Omitting data that were obtained and would be appropriate for recording based on study design and conduct (e.g., not recording exclusionary medical history or prohibited concomitant medications or treatments; omitting data so that a statistical analysis yields a result that would not have been obtained had all data been analyzed).

(ii) The term *data* includes, but is not limited to, individual facts, tests, specimens, samples, results, statistics, items of information, or statements made by individuals.

(2) Sponsors should not report errors (e.g., typographical errors, transposed numbers or characters) to FDA under paragraph (e) of this section.

PART 511—NEW ANIMAL DRUGS FOR INVESTIGATIONAL USE

19. The authority citation for 21 CFR part 511 continues to read as follows:

Authority: 21 U.S.C. 321, 351, 352, 353, 360b, 371.

20. Section 511.1 is amended by redesignating paragraphs (c), (d), (e), (f), and (g) as paragraphs (d), (e), (f), (g), and (h), respectively, and by adding new paragraph (c) to read as follows:

§ 511.1 New animal drugs for investigational use exempt from section 512(a) of the act.

* * * * *

(c) *Reporting falsification of data.* (1) When a sponsor becomes aware of information indicating that any person has, or may have, engaged in the falsification of data in the course of reporting study results, or in the course of proposing, designing, performing, recording, supervising, or reviewing studies conducted by or on behalf of a sponsor or relied on by a sponsor, the sponsor must report this information to the Center for Veterinary Medicine (Center). A sponsor must report this information regardless of whether the sponsor has evidence as to the intent of the person who has, or may have, falsified data. The sponsor must report this information to the Center promptly, but no later than 45 calendar days after the sponsor becomes aware of the

information. For the purpose of this paragraph only, the following definitions apply:

(i) *Falsification of data* means creating, altering, recording, or omitting data in such a way that the data do not represent what actually occurred. Examples of falsification of data include, but are not limited to, the following:

(A) Creating data that were never obtained (e.g., making up data or results and recording or reporting them; reporting enrollment in a study of a subject who did not exist; forging the signature on an informed consent form);

(B) Altering data by replacing original data with something different that does not accurately reflect study conduct or results (e.g., changing a laboratory measurement to a less extreme deviation from normal);

(C) Recording or obtaining data from a specimen, sample, or test whose origin is not accurately described or in a way that does not accurately reflect the data (e.g., changing the date of a specimen, sample, or test; adding a substance not called for in the study to a specimen or sample; identifying a specimen, sample, or test as coming from a specific subject when it came from a source other than the subject);

(D) Omitting data that were obtained and would be appropriate for recording based on study design and conduct (e.g., not recording exclusionary medical history or prohibited concomitant medications or treatments; omitting data so that a statistical analysis yields a result that would not have been obtained had all data been analyzed).

(ii) The term *data* includes, but is not limited to, individual facts, tests, specimens, samples, results, statistics, items of information, or statements made by individuals.

(2) Sponsors should not report errors (e.g., typographical errors, transposed numbers or characters) to FDA under paragraph (c) of this section.

* * * * *

PART 571—FOOD ADDITIVE PETITIONS

21. The authority citation for 21 CFR part 571 continues to read as follows:

Authority: 21 U.S.C. 321, 342, 348, 371; 42 U.S.C. 241.

22. Section 571.1 is amended by adding paragraph (l) to read as follows:

§ 571.1 Petitions.

* * * * *

(l)(1) When a petitioner becomes aware of information indicating that any person has, or may have, engaged in the falsification of data in the course of reporting study results, or in the course of proposing, designing, performing, recording, supervising, or reviewing studies conducted by or on behalf of the petitioner, relied on by the petitioner, or otherwise cited in the petition under this part, the petitioner must report this information to the Center for Food Safety and Applied Nutrition (Center). A petitioner must report this information regardless of whether the petitioner has evidence as to the intent of the person who has, or may have, falsified data. The petitioner must report this information to the Center promptly, but no later than 45 calendar days after the petitioner becomes aware of the information. For the purpose of this section only, the following definitions apply:

(i) *Falsification of data* means creating, altering, recording, or omitting data in such a way that the data do not represent what actually occurred. Examples of falsification of data include, but are not limited to, the following:

(A) Creating data that were never obtained (e.g., making up data or results and recording or reporting them; reporting enrollment in a study of a subject who did not exist; forging the signature on an informed consent form);

(B) Altering data by replacing original data with something different that does not accurately reflect study conduct or results (e.g., changing a laboratory measurement to a less extreme deviation from normal);

(C) Recording or obtaining data from a specimen, sample, or test whose origin is not accurately described or in a way that does not accurately reflect the data (e.g., changing the date of a specimen, sample, or test; adding a substance not called for in the study to a specimen or sample; identifying a specimen, sample, or test as coming from a specific subject when it came from a source other than the subject);

(D) Omitting data that were obtained and would be appropriate for recording based on study design and conduct (e.g., not recording exclusionary medical history or prohibited concomitant medications or treatments; omitting data so that a statistical analysis yields a result that would not have been obtained had all data been analyzed).

(ii) The term *data* includes, but is not limited to, individual facts, tests, specimens, samples, results, statistics, items of information, or statements made by individuals.

(2) Petitioners should not report errors (e.g., typographical errors, transposed numbers or characters) to FDA under paragraph (l) of this section.

PART 812—INVESTIGATIONAL DEVICE EXEMPTIONS

23. The authority citation for 21 CFR part 812 continues to read as follows:

Authority: 21 U.S.C. 331, 351, 352, 353, 355, 360, 360c–360f, 360h–360j, 371, 372, 374, 379e, 381, 382, 383; 42 U.S.C. 216, 241, 262, 263b–263n.

24. Section 812.2 is amended by revising paragraph (c) introductory text to read as follows:

§ 812.2 Applicability.

* * * * *

(c) *Exempted investigations*. This part, with the exception of §§ 812.46(d) and 812.119, does not apply to investigations of the following categories of devices:

* * * * *

25. Section 812.46 is amended by adding paragraph (d) to read as follows:

§ 812.46 Monitoring investigations.

* * * * *

(d) *Falsification*. (1) When a sponsor becomes aware of information indicating that any person has, or may have, engaged in the falsification of data in the course of reporting study results, or in the course of proposing, designing, performing, recording, supervising, or reviewing studies conducted by or on behalf of a sponsor or relied on by a sponsor involving studies subject to this part, the sponsor must report this information to FDA. A sponsor must report this information regardless of whether the sponsor has evidence as to the intent of the person who has, or may have, falsified data. The sponsor must report this information to FDA promptly, but no later than 45 calendar days after the sponsor becomes aware of the information. Such reports should be submitted to the Center with jurisdiction over the product or clinical trial. For studies involving devices regulated by the Center for Devices and Radiological Health (CDRH), reports should be submitted to the Division of Bioresearch Monitoring (HFZ–310), Office of Compliance, Center for Devices and Radiological Health, Food and Drug Administration. For studies involving products regulated by the Center for Biologics Evaluation and Research (CBER), reports should be submitted to the Division of Inspections and Surveillance (HFM–650), Office of Compliance and Biologics Quality, Center for Biologics Evaluation and Research, Food and Drug Administration. For the purpose of this section only, the following definitions apply:

(i) *Falsification of data* means creating, altering, recording, or omitting

data in such a way that the data do not represent what actually occurred. Examples of falsification of data include, but are not limited to, the following:

(A) Creating data that were never obtained (e.g., making up data or results and recording or reporting them; reporting enrollment in a study of a subject who did not exist; forging the signature on an informed consent form);

(B) Altering data by replacing original data with something different that does not accurately reflect study conduct or results (e.g., changing a laboratory measurement to a less extreme deviation from normal);

(C) Recording or obtaining data from a specimen, sample, or test whose origin is not accurately described or in a way that does not accurately reflect the data (e.g., changing the date of a specimen, sample, or test; adding a substance not called for in the study to a specimen or sample; identifying a specimen, sample, or test as coming from a specific subject when it came from a source other than the subject);

(D) Omitting data that were obtained and would be appropriate for recording based on study design and conduct (e.g., not recording exclusionary medical history or prohibited concomitant medications or treatments; omitting data so that a statistical analysis yields a result that would not have been obtained had all data been analyzed).

(ii) The term *data* includes, but is not limited to, individual facts, tests, specimens, samples, results, statistics, items of information, or statements made by individuals.

(2) Sponsors should not report errors (e.g., typographical errors, transposed numbers or characters) to FDA under paragraph (d) of this section.

Dated: February 12, 2010.

Leslie Kux,

Acting Assistant Commissioner for Policy.

[FR Doc. 2010–3123 Filed 2–18–10; 8:45 am]

BILLING CODE 4160–01–S

POSTAL REGULATORY COMMISSION

39 CFR Part 3050

[Docket No. RM2010–8; Order No. 406]

Periodic Reporting

AGENCY: Postal Regulatory Commission.

ACTION: Advance notice of proposed rulemaking; availability of rulemaking petition.

SUMMARY: The Commission is noticing a Postal Service petition proposing a change in transportation cost system sampling. The proposal involves distributing rail costs using inter-BMC highway distribution factors. This notice briefly describes the Postal Service's rationale for proposing this change and addresses procedural steps associated with the petition.

DATES: Comments are due: February 24, 2010.

ADDRESSES: Submit comments electronically via the Commission's Filing Online system at *http://www.prc.gov*. Commenters who cannot submit their views electronically should contact the person identified in **FOR FURTHER INFORMATION CONTACT** by telephone for advice on alternatives to electronic filing.

FOR FURTHER INFORMATION CONTACT: Stephen L. Sharfman, General Counsel, 202–789–6820 or *stephen.sharfman@prc.gov.*

SUPPLEMENTARY INFORMATION:

Table of Contents

I. Background
II. Procedural Matters
III. Ordering Paragraphs

I. Background

On February 9, 2010, the Postal Service filed a petition to initiate an informal rulemaking proceeding to consider a change in the analytical methods approved for use in periodic reporting.[1] The Postal Service labels its proposal "Proposal One" because it intends that it relate to the FY 2010 rather than the FY 2009 compliance reporting cycle. Proposal One seeks authorization from the Commission to immediately eliminate the rail portion of the Transportation Cost System (TRACS) sampling, and proposes instead to distribute rail costs using the Inter-BC highway distribution factors.

The Postal Service states that as part of a realignment of its transportation and distribution systems, it is shifting much of its transportation needs from rail to truck. Because rail costs are rapidly dwindling, it proposes to eliminate TRACS rail sampling, and to use the TRACS inter-BMC distribtion in place of the Rail distribution key in Cost Segment 14. Table 1 of the supporting material accompanying the Petition (Proposal One) shows that Freight Rail and Rail Plant Load costs are expected to decline by 75 percent from FY 2009 to FY 2010, when they will amount to less than $15 million. *Id.,* Proposal One, at 1. Table 2 shows that substituting the inter-BMC distribution key for the Rail distribution key in FY 2009 would have had a small impact on the share of Segment 14 costs borne by each market dominant product. *Id.* at 2. The Postal Service comments that the impact will be *de minimis* in FY 2010 when Rail costs will make up a much smaller share of Segment 14 costs. The Postal Service states its desire to make the change before Quarter 3 of FY 2010 makes more efficient use of its data collection resources. *Id.*

II. Procedural Matters

The Commission sets February 24, 2010 as the due date for public comments. The Commission will determine the need for reply comments after reviewing the initial comments received.

Kenneth Moeller is designated as the Public Representative to represent the interests of the general public in this proceeding.

III. Ordering Paragraphs

It is ordered:

1. The Petition of the United States Postal Service Requesting Initiation of a Proceeding to Consider a Proposed Change in Analytic Principles (Proposal One), filed February 9, 2010, is granted.

2. The Commission establishes Docket No. RM2010–8 to consider the matters raised by the Postal Service's Petition.

3. Interested persons may submit comments on Proposal One no later than February 24, 2010.

4. Pursuant to 39 U.S.C. 505, Kenneth Moeller is appointed to serve as the Public Representative representing the interests of the general public.

5. The Secretary shall arrange for publication of this notice in the **Federal Register.**

By the Commission.

Shoshana M. Grove,

Secretary.

[FR Doc. 2010–3225 Filed 2–18–E8; 8:45 am]

BILLING CODE 7710–FW–S

[1] Petition of the United States Postal Service Requesting Initiation of a Proceeding to Consider a Proposed Change in Analytic Principles (Proposal One), February 9, 2010 (Petition).

ENVIRONMENTAL PROTECTION AGENCY

40 CFR Parts 80, 85, and 86

[EPA–HQ–OAR–2010–0052; FRL–9113–8]

RIN 2060–AI23; 2060–AQ12

Tier 2 Light-Duty Vehicle and Light-Duty Truck Emission Standards and Gasoline Sulfur Control Requirements (Section 610 Review)

AGENCY: Environmental Protection Agency (EPA).

ACTION: Request for comments on Regulatory Flexibility Act Section 610 Review.

SUMMARY: On February 10, 2000 (65 FR 6698), EPA published emission standards for light-duty vehicles and light-duty trucks requiring vehicle manufacturers to reduce tailpipe emissions. Specifically, EPA sought to reduce emissions of nitrogen oxides and non-methane hydrocarbons, pollutants which contribute to ozone pollution. The rulemaking also required oil refiners to limit the sulfur content of the gasoline they produce. Sulfur in gasoline has a detrimental impact on catalyst performance and the sulfur requirements have enabled the introduction of advanced technology emission control systems on motor vehicles.

Pursuant to Section 610 of the Regulatory Flexibility Act, EPA is now initiating a review of this rule to determine if the provisions related to small entities should be continued without change, or should be rescinded or amended to minimize adverse economic impacts on small entities.

DATES: Comments must be received on or before March 22, 2010.

ADDRESSES: Submit your comments, identified by Docket ID No. EPA–HQ–OAR–2010–0052, by one of the following methods:

- *www.regulations.gov:* Follow the on-line instructions for submitting comments.
- *E-mail: a-and-r-Docket@epa.gov.*
- *Fax:* 202–566–9744.
- *Mail:* Docket No. EPA–HQ–OAR–2010–0052, Environmental Protection Agency, Mail code 2822T, 1200 Pennsylvania Ave., NW., Washington, DC 20460.
- *Hand Delivery:* Docket No. EPA–HQ–OAR–2010–0052, Environmental Protection Agency, EPA West, Room 3334, 1301 Constitution Ave., NW., Washington, DC 20004. Such deliveries are only accepted during the Docket's normal hours of operation, and special arrangements should be made for deliveries of boxed information.

Instructions: Direct your comments to Docket ID No. EPA–HQ–OAR–2010–0052. The EPA's policy is that all comments received will be included in the public docket without change and may be made available online at *www.regulations.gov,* including any personal information provided, unless the comment includes information claimed to be Confidential Business Information (CBI) or other information whose disclosure is restricted by statute. Do not submit information that you consider to be CBI or otherwise protected through *www.regulations.gov* or e-mail. The *www.regulations.gov* Web site is an "anonymous access" system, which means EPA will not know your identity or contact information unless you provide it in the body of your comment. If you send an e-mail comment directly to EPA without going through *www.regulations.gov,* your e-mail address will be automatically captured and included as part of the comment that is placed in the public docket and made available on the Internet. If you submit an electronic comment, EPA recommends that you include your name and other contact information in the body of your comment and with any disk or CD–ROM you submit. If EPA cannot read your comment due to technical difficulties and cannot contact you for clarification, EPA may not be able to consider your comment. Electronic files should avoid the use of special characters, any form of encryption, and be free of any defects or viruses.

Docket: All documents in the docket are listed in the *www.regulations.gov* index. Although listed in the index, some information is not publicly available, e.g., CBI or other information whose disclosure is restricted by statute. Certain other material, such as copyrighted material, will be publicly available only in hard copy. Publicly available docket materials are available either electronically in *www.regulations.gov* or in hard copy at the Air and Radiation Docket and Information Center, EPA/DC, EPA West, Room 3334, 1301 Constitution Ave., NW., Washington, DC. The Public Reading Room is open from 8:30 a.m. to 4:30 p.m., Monday through Friday, excluding legal holidays. The telephone number for the Public Reading Room is (202) 566–1744 and the telephone number for the Air and Radiation Docket and Information Center is (202) 566–1742.

FOR FURTHER INFORMATION CONTACT: Tad Wysor, Office of Transportation and Air Quality, Assessment and Standards Division, Environmental Protection Agency, 2000 Traverwood Drive, Ann Arbor, MI 48105; *telephone number:* (734) 214–4332; fax number (734) 214–4816; e-mail address: *wysor.tad@epa.gov,* or Assessment and Standards Division Hotline; telephone number (734) 214–4636; e-mail address *asdinfo@epa.gov.*

SUPPLEMENTARY INFORMATION: The Agency published the Tier 2 Motor Vehicle Emissions Standards and Gasoline Sulfur Control Requirements rule (Tier 2 Program) on February 10, 2000 (65 FR 6698). The program significantly reduced emissions related to ozone and particulate matter from new passenger cars and light trucks, including pickup trucks, vans, minivans, and sport-utility vehicles. The program also required refiners to significantly reduce the level of sulfur in their gasoline.

The Tier 2 program required vehicle manufacturers to reduce new vehicle emissions, primarily nitrogen oxide, volatile organic compounds, and particulate matter. Included as 'manufacturers' were several companies that convert gasoline vehicles to operate on alternative fuel, and several that import vehicles into the U.S. and upgrade their emission control systems to EPA specifications. Most of these companies are small entities, and a SBREFA panel recommended that EPA provide special flexibility to these types of vehicle manufacturers. In the final rule, EPA adopted these recommendations, including providing more time before the companies' vehicles were required to meet the emission standards otherwise applicable to larger manufacturers.

The Tier 2 program also required oil refiners to produce gasoline with much-reduced content of sulfur, primarily to protect the improved catalyst systems anticipated on new Tier 2 vehicles. An informal coalition of small refining companies formed to participate in the rulemaking and the SBREFA panel. In this case as well, EPA adopted recommendations of the small refiners, providing more lead time for meeting the gasoline sulfur requirements.

This notice announces that EPA will review the provisions of this regulation related to small entities pursuant to section 610 of the Regulatory Flexibility Act (RFA) (5 U.S.C. 610). EPA solicits comments on the following factors: (1) The continued need for the rule; (2) the Nature of complaints or comments received concerning the rule; (3) the complexity of the rule; (4) the extent to which the rule overlaps, duplicates, or conflicts with other Federal, State, or local government rules; and (5) the degree to which technology, economic conditions, or other factors have changed in the area affected by the rule.

Comments must be received by March 22, 2010. In submitting comments, please reference Docket ID number EPA–HQ–OAR–2010–0052, and follow the instructions provided in the **ADDRESSES** section of this notice. The results of EPA's review will be summarized in a report and placed in the rulemaking docket referenced above. This docket can be accessed at *http://www.regulations.gov.*

Dated: February 12, 2010.

Alexander Cristofaro,

Director, Office of Regulatory Policy and Management.

[FR Doc. 2010–3249 Filed 2–18–10; 8:45 am]

BILLING CODE 6560–50–P

ENVIRONMENTAL PROTECTION AGENCY

40 CFR Part 790

[EPA–HQ–OPPT–2009–0894; FRL–8802–6]

RIN 2070–AJ59

Amendments to Enforceable Consent Agreement Procedural Rules

AGENCY: Environmental Protection Agency (EPA).

ACTION: Proposed rule.

SUMMARY: EPA is proposing to revise the procedures for developing Enforceable Consent Agreements (ECAs) to generate test data under the Toxic Substances Control Act (TSCA). The main features of the ECA process that EPA is proposing to change include when and how to initiate negotiations and inserting a firm deadline at which negotiations will terminate. EPA is also proposing to amend several sections in 40 CFR part 790 to place the ECA provisions in one section and the Interagency Testing Committee (ITC) provisions in a separate section, to make it clearer that there is one ECA negotiation procedure applicable to all circumstances when an ECA would be appropriate and to make conforming changes in other sections that reference the ECA procedures.

DATES: Comments must be received on or before March 22, 2010.

ADDRESSES: Submit your comments, identified by docket identification (ID) number EPA–HQ–OPPT–2009–0894, by one of the following methods:

- *Federal eRulemaking Portal*: *http://www.regulations.gov*. Follow the on-line instructions for submitting comments.
- *Mail*: Document Control Office (7407M), Office of Pollution Prevention and Toxics (OPPT), Environmental Protection Agency, 1200 Pennsylvania Ave., NW., Washington, DC 20460–0001.
- *Hand Delivery*: OPPT Document Control Office (DCO), EPA East Bldg., Rm. 6428, 1201 Constitution Ave., NW., Washington, DC. Attention: Docket ID Number EPA–HQ–OPPT–2009–0894. The DCO is open from 8 a.m. to 4 p.m., Monday through Friday, excluding legal holidays. The telephone number for the DCO is (202) 564–8930. Such deliveries are only accepted during the DCO's normal hours of operation, and special arrangements should be made for deliveries of boxed information.

Instructions: Direct your comments to docket ID number EPA–HQ–OPPT–2009–0894. EPA's policy is that all comments received will be included in the docket without change and may be made available on-line at *http://www.regulations.gov*, including any personal information provided, unless the comment includes information claimed to be Confidential Business Information (CBI) or other information whose disclosure is restricted by statute. Do not submit information that you consider to be CBI or otherwise protected through regulations.gov or e-mail. The regulations.gov website is an "anonymous access" system, which means EPA will not know your identity or contact information unless you provide it in the body of your comment. If you send an e-mail comment directly to EPA without going through regulations.gov, your e-mail address will be automatically captured and included as part of the comment that is placed in the docket and made available on the Internet. If you submit an electronic comment, EPA recommends that you include your name and other contact information in the body of your comment and with any disk or CD-ROM you submit. If EPA cannot read your comment due to technical difficulties and cannot contact you for clarification, EPA may not be able to consider your comment. Electronic files should avoid the use of special characters, any form of encryption, and be free of any defects or viruses.

Docket: All documents in the docket are listed in the docket index available at *http://www.regulations.gov*. Although listed in the index, some information is not publicly available, e.g., CBI or other information whose disclosure is restricted by statute. Certain other material, such as copyrighted material, will be publicly available only in hard copy. Publicly available docket materials are available electronically at *http://www.regulations.gov*, or, if only available in hard copy, at the OPPT Docket. The OPPT Docket is located in the EPA Docket Center (EPA/DC) at Rm. 3334, EPA West Bldg., 1301 Constitution Ave., NW., Washington, DC. The EPA/DC Public Reading Room hours of operation are 8:30 a.m. to 4:30 p.m., Monday through Friday, excluding legal holidays. The telephone number of the EPA/DC Public Reading Room is (202) 566–1744, and the telephone number for the OPPT Docket is (202) 566–0280. Docket visitors are required to show photographic identification, pass through a metal detector, and sign the EPA visitor log. All visitor bags are processed through an X-ray machine and subject to search. Visitors will be provided an EPA/DC badge that must be visible at all times in the building and returned upon departure.

FOR FURTHER INFORMATION CONTACT: *For general information contact*: Colby Lintner, Regulatory Coordinator, Environmental Assistance Division (7408M), Office of Pollution Prevention and Toxics, Environmental Protection Agency, 1200 Pennsylvania Ave., NW., Washington, DC 20460–0001; telephone number: (202) 554–1404; e-mail address: *TSCA-Hotline@epa.gov*.

For technical information contact: Jessica Barkas, Chemical Control Division (7405M), Office of Pollution Prevention and Toxics, Environmental Protection Agency, 1200 Pennsylvania Ave., NW., Washington, DC 20460–0001; telephone number: (202) 250–8880; e-mail address: *barkas.jessica@epa.gov*.

SUPPLEMENTARY INFORMATION:

I. General Information

A. Does This Action Apply to Me?

You may be potentially affected by this action if you manufacture (defined by statute to include import) or process chemical substances. Potentially affected entities may include, but are not limited to:

- Manufacturers (defined by statute to include importers) of chemical substances (NAICS codes 325 and 324110), e.g., chemical manufacturing and petroleum refineries.
- Processors of chemical substances (NAICS codes 325 and 324110), e.g., chemical manufacturing and petroleum refineries.

This listing is not intended to be exhaustive, but rather provides a guide for readers regarding entities likely to be affected by this action. Other types of entities not listed in this unit could also be affected. The North American Industrial Classification System (NAICS) codes have been provided to assist you and others in determining whether this action might apply to certain entities. If you have any questions regarding the applicability of this action to a particular entity, consult the technical person listed under **FOR FURTHER INFORMATION CONTACT**.

B. What Should I Consider As I Prepare My Comments for EPA?

1. *Submitting CBI.* Do not submit this information to EPA through regulations.gov or e-mail. Clearly mark the part or all of the information that you claim to be CBI. For CBI information in a disk or CD-ROM that

you mail to EPA, mark the outside of the disk or CD-ROM as CBI and then identify electronically within the disk or CD-ROM the specific information that is claimed as CBI. In addition to one complete version of the comment that includes information claimed as CBI, a copy of the comment that does not contain the information claimed as CBI must be submitted for inclusion in the public docket. Information so marked will not be disclosed except in accordance with procedures set forth in 40 CFR part 2.

2. *Tips for preparing your comments.* When submitting comments, remember to:

i. Identify the document by docket ID number and other identifying information (subject heading, **Federal Register** date and page number).

ii. Follow directions. The Agency may ask you to respond to specific questions or organize comments by referencing a Code of Federal Regulations (CFR) part or section number.

iii. Explain why you agree or disagree; suggest alternatives and substitute language for your requested changes.

iv. Describe any assumptions and provide any technical information and/or data that you used.

v. If you estimate potential costs or burdens, explain how you arrived at your estimate in sufficient detail to allow for it to be reproduced.

vi. Provide specific examples to illustrate your concerns and suggest alternatives.

vii. Explain your views as clearly as possible, avoiding the use of profanity or personal threats.

viii. Make sure to submit your comments by the comment period deadline identified.

II. Background

A. What Action is the Agency Taking?

EPA promulgated the ECA rules at 40 CFR part 790 in 1986. The procedures were developed in consultation with the Natural Resources Defense Council and the Chemical Manufacturers Association; several public meetings to discuss the procedures were held before the procedural rule was promulgated as an interim final rule.

ECAs are enforceable agreements between EPA and one or more chemical manufacturers or processors to conduct specific testing on a particular chemical substance. These agreements are designed to provide EPA with data identified as necessary to evaluate a particular chemical substance without the need for EPA to first make the risk- or exposure-based findings for, or promulgate, a TSCA section 4 test rule, and without introducing delays inherent in the rulemaking process. ECAs were intended to permit EPA to obtain test data more quickly than test rules, while preserving opportunity for input from the public and the affected manufacturer(s).

When EPA promulgated the original ECA rules, it anticipated that the timeline for completing an ECA, from ITC recommendation to agreement finalization, would be 50 weeks. EPA indicated uncertainty about the feasibility of the schedule from the outset, noting in Appendix A to subpart E of part 790 that the schedule was subject to amendment, by rule, should it prove unrealistic in practice. Since the publication of the ECA rule, the average time to complete an ECA has been approximately two years and negotiations have taken well over two years for several chemicals. Negotiations for ECAs on many chemicals have been started but never formally concluded, or have been terminated. EPA now proposes to revise the ECA procedural rule to increase the efficiency and flexibility of the ECA process.

EPA recognizes the value of an open and transparent process for developing these agreements, and proposes to retain the opportunities for public involvement in negotiations, to review draft agreements, and to object to agreements. Key features that EPA is proposing to change involve determining when and how to initiate negotiations and inserting a firm deadline at which negotiations will terminate, and no ECA will be agreed to absent an affirmative decision by EPA to extend negotiations. EPA is also proposing to amend several sections in 40 CFR part 790 to place the ECA procedure in one section, to make it clearer that there is one ECA negotiation procedure applicable to all circumstances when an ECA would be appropriate, and to make conforming changes in other sections that reference the ECA procedures.

B. What is the Agency's Authority for Taking This Action?

Section 4 of TSCA authorizes EPA to require manufacturers and processors of chemical substances and mixtures to test these chemicals to generate data that is relevant to determining whether the chemicals present an unreasonable risk. Section 4(a) of TSCA empowers the Agency to promulgate rules which require such testing. Section 4 of TSCA provides implied authority to enter into enforceable consent agreements requiring testing where such agreements provide procedural safeguards equivalent to those that apply where testing is conducted by rule.

C. What is An ECA?

An ECA is an enforceable legal agreement between EPA and one or more private parties, such as a group of chemical manufacturers, specifying that those private parties will conduct testing on a given chemical substance to fill an EPA-identified need. The violation of the terms of an ECA is a prohibited act under TSCA and is enforceable under sections 16 and 17 of TSCA. In addition, chemicals subject to ECAs, similar to chemicals subject to test rules, are subject to certain additional provisions of TSCA (e.g., export notification under section 12 of TSCA). Because private parties enter ECAs voluntarily, EPA need not make findings as to unreasonable risk of injury to health or the environment, significant or substantial human exposure, or other findings that would be required to issue a final test rule. ECAs were conceived as a tool for EPA to acquire test data more expeditiously than could be achieved through the typical rulemaking process.

D. When Has EPA Used ECAs and Why is EPA Proposing to Modify the ECA Procedures?

Since 1986, EPA has published a number of **Federal Register** documents announcing its interest in using ECAs to obtain various test data. In some instances, EPA selected one or more chemical substances for testing consideration based on an ITC recommendation or designation (see, e.g., ECA for cyclohexane, 59 FR 59660 (November 18, 1994) (FRL–4909–5)). In other instances, EPA selected the substance or substances based on its own initiative (see, e.g., ECA for 1,2-ethylene dichloride, 68 FR 33125 (June 3, 2003) (FRL–7300–6)). ECAs have been used for testing single chemical substances and for testing multiple chemical substances, usually chemical substances related to one another. For the reasons summarized in Unit II.A. and further explained Unit II.D., E., and F., EPA has been using ECAs with declining frequency over the last several years. EPA's data needs have not diminished, however, and the reduced number of ECAs has not been offset by an increase in the issuance of test rules. Because EPA would like to continue to use ECAs, where appropriate, it is proposing to amend the rules to make them quicker and easier to implement, to preserve existing provisions for transparency and adequate opportunities for public participation, and to make them easier for the public

to understand. EPA believes that these changes will increase Agency efficiency by enhancing EPA's ability to use ECAs where appropriate, thereby permitting EPA to focus regulatory activity (and resources) on those chemicals for which ECAs are inappropriate or for which agreement cannot be reached significantly faster than a rule can be promulgated.

E. When Does EPA Use Test Rules?

EPA typically uses test rules when it makes certain findings specified under section 4(a) of TSCA. They include the finding that either the manufacture, distribution in commerce, processing, use, or disposal of a chemical substance or mixture, or that any combination of such activities, may present an unreasonable risk of injury to health or the environment; or that a chemical substance is or will be produced in substantial quantities and it either enters or may reasonably be anticipated to enter the environment in substantial quantities, or there is or may be significant or substantial human exposure to that chemical substance or mixture. In addition, they include the findings that "there are insufficient data or experience upon which the effects of the manufacture, distribution in commerce, processing, use, or disposal of such substance or mixture or any combination of such activities on health or the environment can reasonably be determined or predicted," and that "testing of such substance or mixture with respect to such effects is necessary to develop such data" (15 U.S.C. 2603).

EPA has typically used test rules in circumstances where the ITC has designated a chemical for testing. In such circumstances, EPA has a statutory duty to either initiate a proceeding for a test rule within 12 months of the designation, or publish reasons why a test rule is not necessary. EPA has also recently used test rules to require testing of several high production volume (HPV) chemicals.

More generally, EPA may pursue a test rule whenever EPA believes it can make the necessary findings. This includes situations where no party has volunteered to participate in ECA negotiations, where ECA negotiations are tried and fail, where the testing protocols or other considerations are too complex or new to make negotiations an efficient means of requiring testing, or in other circumstances that lead EPA to believe that negotiations would be unlikely to produce an ECA.

F. What are the Specific Proposed Changes to the ECA Rule?

1. *Proposed reorganization of 40 CFR part 790, subpart B and removal of Appendix A to subpart E of part 790.* EPA is proposing to amend 40 CFR 790.20 and 40 CFR 790.22 by combining § 790.22 with portions of § 790.24, by consolidating § 790.20 with portions of § 790.26 and § 790.28, and by consolidating § 790.22 with § 790.28 to improve the organization of the rules, and to make it more clear that there is one ECA negotiation procedure for all situations in which ECAs are appropriate (generally, based on EPA's own initiative or an ITC recommendation).

EPA is proposing to move part of § 790.22 to § 790.20 so that all provisions pertaining to how ITC intends to carry out making recommendations or designations, and how EPA intends to respond to those ITC actions, are in one section, and so that all provisions pertaining to ECA development procedures (which can apply whether or not the ITC has made a recommendation or designation) are in another section. EPA proposes to expand the section currently numbered § 790.20(b)(2), which presently only covers recommendation without intent to designate, to include the same list of possible actions when ITC makes a recommendation, whether with or without intent to designate, and to move the procedures described in § 790.22(a) to § 790.20. The text presently at § 790.22(a) will replace § 790.20(b), and the current § 790.20(b) will be redesignated § 790.20(c). This will help centralize all of the ITC-related procedures and remove the potentially confusing ITC discussion from the ECA procedural rules. To further centralize and consolidate the ECA procedures, EPA proposes to move the criteria for determining when consensus is reached, currently in § 790.24 to § 790.22.

EPA proposes to remove § 790.26 (initiation and completion of rulemaking proceedings on ITC-designated chemicals) and § 790.28 (procedures for developing consent agreements and/or test rules for chemicals that have not been designated or recommended with intent to designate by the ITC). The procedures and explanations in these sections are either needlessly duplicative or would be superseded by or incorporated into the proposed changes to § 790.20 (procedures that follow ITC recommendation and designation) and § 790.22 (ECA procedures). First, the proposed amended ECA procedures already articulate the principle (in proposed § 790.22(b)(4)) that EPA may proceed to rulemaking under TSCA section 4 if ECA negotiations are not successful. Second, for the reasons described in Unit II.F.1., EPA is proposing to remove the Appendix A and schedule table referred to in § 790.26(b), and the remainder of § 790.26(b) as duplicative of EPA's existing rulemaking obligations under the Administrative Procedures Act. Third, EPA is proposing to incorporate § 790.26(c) into the text of § 790.20(c)(1)(i) (§ 790.20(b)(1)(i) in the existing rules). Fourth, § 790.28, which describes the procedures for developing ECAs for chemicals that have not been designated or recommended with intent to designate by the ITC, is unnecessary in light of the proposed expansion of the scope of § 790.22. The procedures that EPA is proposing in § 790.22 will apply to all circumstances in which ECAs are appropriate, including chemicals that have not been designated or recommended with intent to designate by the ITC.

EPA proposes to remove Appendix A to subpart E of part 790, including the schedule table, because the Agency believes that the proposed revised procedures in § 790.20 and § 790.22 adequately explain timelines for meetings and notices and because EPA is proposing to limit the required number of meetings and notices associated with ECA negotiations. The table is merely illustrative and provides little additional explanatory utility. Furthermore, the schedule table commingles events relating to ITC recommendations-with-intent-to-designate and more generic events relating to all ECA negotiations in a manner that could generate confusion over what procedures apply when EPA wishes to acquire testing information on a chemical for which the ITC has not made a recommendation with intent to designate.

In addition to the changes discussed in Unit II.F.1., EPA proposes to make additional conforming and clarifying changes to § 790.20. The title of the section will be amended to include "recommendation with intent to designate," and the title of § 790.20(c) (currently § 790.20(b)) will be amended to include ITC "designations." Finally, EPA proposes to make a few conforming changes to § 790.1, including removing the reference to the Appendix A schedule table in § 790.1(d) and removing the statement in § 790.1(c), regarding EPA's intent to proceed with rulemaking if ECA negotiations are unsuccessful, because the proposed amended § 790.22(b)(4) includes a similar statement of intent.

2. *Proposed changes to the ECA procedures.* EPA is proposing to revise the ECA procedures to reflect that negotiation of an ECA for a chemical will not commence until EPA has received and evaluated a testing agreement proposal, and until EPA believes it is likely that proceeding with negotiation of a consent agreement, based on the proposal, would be an efficient and successful means of developing the test data. When evaluating testing proposals, EPA would generally consider factors such as whether it appears to address EPA's testing interests and whether it appears to be a good faith attempt to present an agreement acceptable to EPA.

Under the current regulations, at § 790.22 (b)(1), where there is an ITC recommendation with intent to designate, solicitation for negotiation participants occurs at the same time the ITC report is published, rather than after EPA has had a chance to determine whether an ECA would even be an appropriate means for obtaining the test data in a given instance. In such circumstances, negotiation would begin before EPA is able to determine whether any party would be interested in submitting a testing proposal that might form an adequate basis to begin negotiations and before EPA has concluded that negotiating an ECA would likely be successful and more efficient than promulgating a test rule. EPA believes these circumstances create the unwarranted potential for wasting time and resources on negotiations over a clearly inadequate proposal. In EPA's judgment, not requiring that a minimally acceptable proposed testing agreement be submitted to, and evaluated by, EPA before commencing negotiations has contributed to substantial delay in ECA completion, which would be remedied by the proposed change.

Additional aspects of the current ECA regulations have also been found to contribute to delay. At present, the only time limits or deadlines in the ECA procedures are in the presumptive schedule in Appendix A to subpart E of part 790, and the provision in § 790.22(b)(6) that, in certain circumstances, EPA will terminate negotiations 10 weeks after the deadline for requests to participate in negotiations. EPA has found the schedule to be unrealistic in most circumstances in light of the number of steps it suggests, and notes that the schedule explicitly notes only one point when EPA could terminate negotiations, rather than whenever such negotiations become unproductive or unduly prolonged. Section 790.22(b)(6) currently permits EPA to terminate negotiations over chemicals that the ITC has recommended for testing with an intent to designate if the Agency concludes early in the process that negotiations will be fruitless ("EPA will terminate negotiations after 10 weeks and proceed with rulemaking unless negotiations are likely to result in a draft consent agreement within 4 additional weeks"). This opportunity occurs only ten weeks after the earliest time negotiations begin, before the comment period for the interested parties, and before the "comment resolution meeting." Further, there is no express provision at all for terminating unsuccessful ECA negotiations on chemical substances or mixtures that have not been recommended with intent to designate by the ITC (i.e., those substances that the ITC has simply recommended and those substances that EPA has selected on its own initiative).

EPA proposes to amend § 790.22 to expressly allow EPA to affirmatively terminate negotiations at any time it believes negotiations are unlikely to produce a final agreement, regardless of whether the chemical substance or mixture subject to the negotiation was selected for testing consideration based on an ITC recommendation-with-intent-to-designate, an ITC recommendation, or EPA's own initiative. Furthermore, the proposed amendments would provide that if negotiations have not concluded within six months (again, regardless of the circumstances by which the chemical substance or mixture was selected for testing consideration), ECA negotiations automatically terminate and EPA may pursue a test rule instead. For the cases in which the parties are very near agreement at the end of six months, EPA proposes that the rules be amended to permit EPA to provide one or more extensions of up to 60 days each where it seems likely to EPA that agreement will be reached in that additional time. EPA would notify all interested parties of any extension(s).

The current ECA regulations discuss a number of public meetings that do not seem to be necessary or helpful in many instances. Current § 790.22(a) and the schedule in Appendix A to subpart E of part 790 discuss a focus meeting that is to be held to discuss ITC recommendations-with-intent-to-designate. Current § 790.28 directs that the same schedule is to be followed for chemicals for which there has been no ITC designation or recommendation-with-intent-to-designate, making it unclear whether a public focus meeting must be used in situations other than when the ITC has made a recommendation-with-intent-to-designate. While such a meeting may be helpful as an initial public comment gathering tool when the ITC has made a recommendation-with-intent-to-designate, it is confusing to include this meeting in the procedures for negotiating an ECA because not all chemicals that the ITC recommends-with-intent-to-designate will ultimately be the subject of an ECA. Additionally, it would not be necessary to hold the focus meeting in other situations in which a chemical substance or mixture might be selected for testing consideration because there would not be an ITC recommendation-with-intent-to-designate to discuss (such as when EPA seeks testing data on its own initiative or based on an ITC recommendation without intent to designate).

The regulations at current § 790.22 call for a public meeting to discuss EPA's preliminary testing determinations—this is referred to in the regulations and in the schedule in Appendix A to subpart E of part 790 as the "course setting" meeting. These meetings are in addition to the ECA negotiation meeting or meetings (which are also public). EPA believes that it is unnecessary and unduly rigid to require a course setting meeting in all circumstances in which EPA intends to attempt to negotiate an ECA, regardless of need or public interest. Therefore, EPA proposes to retain this as a requirement only for ITC recommendations-with-intent-to-designate, and to move it from the ECA procedures (at § 790.22(a)(6) in the existing rule) to the ITC response procedures at § 790.20(b)(6) in this proposed rule.

EPA proposes to amend the rules so that the only meetings required by the ECA procedures, consolidated in proposed § 790.22, would be the negotiation meeting or meetings. Negotiation meetings under the proposed ECA procedures could include the draft ECA comment resolution meeting described in the current § 790.22(b)(8), so EPA believes it is unnecessary to include regulatory language in proposed § 790.22 expressly allowing for such a meeting. Other notices regarding EPA's views on testing needs, solicitation of interested parties to participate in negotiations, and invitations to submit draft testing agreement proposals can be efficiently accomplished through **Federal Register** documents, through the EPA website, and through other forms of public communication. In particular, the solicitation of interested parties to participate in negotiations through

Federal Register documents will be maintained.

The proposed amendments to § 790.22 reflect this streamlined, flexible approach to public meetings, and make several other minor changes to modernize and streamline the ECA negotiation and public communication process (e.g., rather than placing meeting minutes, other background documents, etc. into a "public file" in the OPPTS Reading Room, EPA is proposing to place these documents in an Internet-accessible public docket established by EPA at *http://www.regulations.gov*).

III. Statutory and Executive Order Reviews

A. Regulatory Review

Under Executive Order 12866, entitled *Regulatory Planning and Review* (58 FR 51735, October 4, 1993), this proposed rule is not a "significant regulatory action" subject to review by the Office of Management and Budget (OMB) under Executive Order 12866, because it does not meet the criteria in section 3(f)(4) of the Executive Order. Accordingly, EPA did not submit this proposed rulemaking to OMB for review under Executive Order 12866.

B. Paperwork Reduction Act

This action does not impose any new information collection burden, because the development of an ECA does not involve information collection activities as defined by the Paperwork Reduction Act (PRA), 44 U.S.C. 3501 *et seq*. However, the information collection requirements contained in an ECA are already approved by OMB pursuant to the PRA under OMB control number 2070–0033 (EPA ICR No. 1139). Under the PRA, an agency may not conduct or sponsor, and a person is not required to respond to, an information collection request unless it displays a currently valid control number assigned by OMB. The OMB control numbers for EPA's regulations in title 40 of the CFR are listed in 40 CFR part 9, and will be included in the individual ECAs.

C. Regulatory Flexibility Act

Pursuant to section 605(b) of the Regulatory Flexibility Act (RFA), 5 U.S.C. 601 *et seq.*, after considering the potential economic impacts of this proposed rule on small entities, the Agency hereby certifies that this proposed rule would not have a significant adverse economic impact on a substantial number of small entities.

Small entities include small businesses, small organizations, and small governmental jurisdictions. For purposes of assessing the impacts of today's proposed rule on small entities, small entity is defined as: (1) A small business as defined by the Small Business Administration's (SBA) regulations at 13 CFR 121.201; (2) a small governmental jurisdiction that is a government of a city, county, town, school district or special district with a population of less than 50,000; and (3) a small organization that is any not-for-profit enterprise which is independently owned and operated and is not dominant in its field.

This action will not have a significant economic impact on a substantial number of small entities. In determining whether a rule has a significant economic impact on a substantial number of small entities, the impact of concern is any significant adverse economic impact on small entities, since the primary purpose of regulatory flexibility analysis is to identify and address regulatory alternatives "which minimize any significant economic impact of the rule on small entities" (5 U.S.C. 603 and 604). Thus, an agency may certify that a rule will not have a significant economic impact on a substantial number of small entities if the rule relieves regulatory burden, or otherwise has a positive economic effect on all of the small entities subject to the rule.

The proposed changes discussed in this document are expected to streamline and improve the ECA procedures in a way that will benefit all participants. EPA has therefore concluded that this proposed rule will not have any adverse impacts on affected small entities. However, EPA continues to be interested in the potential impacts of the ECA procedures on small entities and welcomes comments on issues related to such impacts.

D. Unfunded Mandates Reform Act

This action does not impose any enforceable duty or contain any unfunded mandate as described under Title II of the Unfunded Mandates Reform Act of 1995 (UMRA), Public Law 104–4. Therefore, this action is not subject to the requirements of UMRA.

E. Federalism

Pursuant to Executive Order 13132, entitled *Federalism* (64 FR 43255, August 10, 1999), EPA has determined that this proposed rule does not have "federalism implications," because it will not have substantial direct effects on the States, on the relationship between the national government and the States, or on the distribution of power and responsibilities among the various levels of government, as specified in Executive Order 13132. Thus, Executive Order 13132 does not apply to this proposed rule.

F. Tribal Implications

Under Executive Order 13175, entitled *Consultation and Coordination with Indian Tribal Governments* (65 FR 67249, November 6, 2000), EPA has determined that this proposed rule does not have tribal implications because it will not have any effect on tribal governments, on the relationship between the Federal Government and the Indian tribes, or on the distribution of power and responsibilities between the Federal Government and Indian tribes, as specified in the executive order. Thus, Executive Order 13175 does not apply to this proposed rule.

G. Children's Health Protection

Executive Order 13045, entitled *Protection of Children from Environmental Health Risks and Safety Risks* (62 FR 1985, April 23, 1997), does not apply to this action because this is not designated as an "economically significant" regulatory action as defined by Executive Order 12866 (see Unit III.A.), nor does this action establish an environmental standard that is intended to have a disproportionate effect on children. To the contrary, this action will revise procedures which will facilitate the development of data and information that EPA and others can use to assess the risks of chemicals, including potential risks to children.

H. Energy Effects

This action is not subject to Executive Order 13211, entitled *Actions Concerning Regulations That Significantly Affect Energy Supply, Distribution, or Use* (66 FR 28355, May 22, 2001) because this action is not expected to affect energy supply, distribution, or use.

I. Technology Standards

Section 12(d) of the National Technology Transfer and Advancement Act of 1995 (NTTAA), Public Law No. 104–113, 12(d) (15 U.S.C. 272 note), directs EPA to use voluntary consensus standards in its regulatory activities unless to do so would be inconsistent with applicable law or otherwise impractical. Voluntary consensus standards are technical standards (e.g., materials specifications, test methods, sampling procedures, and business practices) that are developed or adopted by voluntary consensus standards bodies. The NTTAA directs EPA to provide Congress, through OMB, explanations when the Agency decides

not to use available and applicable voluntary consensus standards.

This proposed rulemaking does not involve technical standards. Therefore, EPA is not considering the use of any voluntary consensus standards.

J. Environmental Justice

This action does not involve special considerations of environmental justice related issues as delineated by Executive Order 12898, entitled *Federal Actions to Address Environmental Justice in Minority Populations and Low-Income Populations* (59 FR 7629, February 16, 1994).

List of Subjects in 40 CFR Part 790

Environmental protection, Chemicals, Hazardous substances, Reporting and recordkeeping requirements.

Dated: February 2, 2010.

Stephen A. Owens,

Assistant Administrator, Office of Prevention, Pesticides and Toxic Substances.

Therefore, it is proposed that 40 CFR part 790 be amended as follows:

PART 790—[AMENDED]

1. The authority citation for part 790 continues to read as follows:

Authority: 15 U.S.C. 2603.

2. Section 790.1 is amended as follows:

a. By revising paragraph (c).

b. By removing paragraph (d).

§ 790.1 Scope, purpose, and authority.

* * * * *

(c) EPA intends to use enforceable consent agreements to accomplish testing where a consensus exists among EPA, affected manufacturers and/or processors, and interested members of the public concerning the need for and scope of testing.

3. Section 790.20 is revised to read as follows:

§ 790.20 Recommendation, recommendation with an intent to designate, and designation of testing candidates by the ITC.

(a) *Interagency Testing Committee (ITC) recommendations and recommendations with intent to designate.* The ITC has advised EPA that it will discharge its responsibilities under section 4(e) of the Toxic Substances Control Act (TSCA) in the following manner:

(1) When the ITC identifies a chemical substance or mixture that it believes should receive expedited consideration by EPA for testing, the ITC may add the substance or mixture to its list of chemicals recommended for testing and include a statement that the ITC intends to designate the substance or mixture for action by EPA in accordance with section 4(e)(1)(B) of TSCA.

(2) Chemical substances or mixtures selected for expedited review under paragraph (a)(1) of this section may, at a later time, be designated for EPA action within 12 months of such designation. The ITC's subsequent decision would be based on the ITC's review of TSCA sections 8(a) and 8(d) data and other relevant information.

(3) Where the ITC concludes that a substance or mixture warrants testing consideration but that expedited EPA review of testing needs is not justified, the ITC will add the substance or mixture to its list of testing recommendations without expressing an intent to designate the substance or mixture for EPA action in accordance with section 4(e)(1)(B) of TSCA.

(4) The ITC reserves its right to designate any chemical that it determines the Agency should, within 12 months of the date first designated, initiate a proceeding under section 4(a) of TSCA.

(b) *Preliminary EPA evaluation of ITC recommendations with intent to designate.* Following receipt of an ITC report containing a recommendation with an intent to designate, EPA will use the following procedure for completing a preliminary evaluation of testing needs on those chemical substances that the ITC has recommended with intent to designate.

(1) EPA will publish the ITC report in the **Federal Register** and announce that interested persons have 30 days to submit comments on the ITC's testing recommendations.

(2) EPA will publish a **Federal Register** document adding all ITC-recommended chemicals to the automatic reporting provisions of its rules under sections 8(a) and 8(d) of TSCA (40 CFR parts 712 and 716).

(3) EPA will hold a public "focus meeting" to discuss the ITC's testing recommendations and obtain comments and information from interested parties.

(4) EPA will evaluate submissions received under TSCA sections 8(a) and 8(d) reporting requirements, comments filed on the ITC's recommendations, and other information and data compiled by the Agency.

(5) EPA will make a preliminary staff determination of the need for testing and, where testing appears warranted, will tentatively select the studies to be performed.

(6) EPA will hold a public meeting to announce its preliminary testing determinations.

(c) *EPA response to ITC designations and recommendations.* (1) Where a substance or mixture is designated for EPA action under section 4(e)(1)(B) of TSCA, the Agency will take either one of the following actions within 12 months after receiving the ITC designation:

(i) Initiate rulemaking proceedings under section 4(a) of TSCA. Where the testing recommendations of the ITC raise unusually complex and novel issues that require additional Agency review and opportunity for public comment, the Agency may initiate rulemaking by publishing an Advance Notice of Proposed Rulemaking (ANPRM).

(ii) Publish a **Federal Register** document explaining the Agency's reasons for not initiating such rulemaking proceedings. EPA may conclude that rulemaking proceedings under section 4(a) of TSCA are unnecessary if it determines that the findings specified in section 4(a) of TSCA cannot be made or if the Agency entered into a consent agreement requiring the testing identified by the ITC.

(2) Where a substance or mixture has been recommended for testing by the ITC, whether with or without an intent to designate, EPA will use its best efforts to act on the ITC's recommendations as rapidly as possible consistent with its other priorities and responsibilities. EPA may respond to the ITC's recommendations with action such as:

(i) Initiating rulemaking proceedings under section 4(a) of TSCA,

(ii) Publishing a **Federal Register** document explaining the Agency's reasons for concluding that testing is unnecessary, or

(iii) Entering into a consent agreement in accordance with this subpart.

4. Section 790.22 is revised to read as follows:

§ 790.22 Procedures for developing consent agreements.

(a) *Preliminary EPA evaluation of proposed consent agreement.* Where EPA believes that testing of a chemical substance or mixture may be needed, and wishes to explore whether a consent agreement may satisfy the identified testing needs, EPA will invite manufacturers and/or processors of the affected chemical substance or mixture to submit a proposed consent agreement to EPA. EPA will evaluate the proposal(s) and may request additional clarifications of or revisions to the proposal(s).

(b) *Negotiation procedures for consent agreements.* If, after evaluating the proposed consent agreement(s), EPA

believes it is likely that proceeding with negotiation of a consent agreement would be an efficient means of developing the data, EPA will use the following procedures to conduct such negotiations:

(1) In the **Federal Register**, EPA will give notice of the availability of the proposal(s) that is the basis for negotiation, invite persons interested in participating in or monitoring negotiations to contact the Agency in writing, set a deadline for interested parties to contact the Agency in writing, and set a date for the negotiation meeting(s).

(2) The Agency will meet with interested parties at the negotiation meeting(s) for the purpose of attempting to negotiate a consent agreement. Only the submitter(s) of the proposal(s) that is the basis for negotiation and those persons who submit written requests to participate in or monitor negotiations by the deadline established under paragraph (b)(1) of this section will be deemed "interested parties" for purposes of this section.

(3) All negotiation meetings will be open to members of the public, but only interested parties will be permitted to participate in negotiations. The minutes of each meeting will be prepared by EPA. Meeting minutes, the proposed consent agreement(s), background documents and other materials distributed at negotiation meetings will be placed in an Internet-accessible public docket established by EPA.

(4) If EPA concludes at any time that negotiations are unlikely to produce a final agreement, EPA will terminate negotiations and may proceed with rulemaking. If EPA terminates negotiations, no further opportunity for negotiations will be provided. EPA will notify all interested parties of the termination.

(5) The period between the first negotiation meeting and final agreement, if any ("the negotiation period"), will be no longer than six months, unless extended prior to its expiration in accordance with paragraph (b)(7) of this section. This period will include all negotiation meetings, and the processes discussed in paragraphs (b)(6) and (b)(9) of this section. If the negotiation period passes without the production of a final agreement, negotiations and development of the subject ECA will terminate automatically.

(6) EPA will circulate a draft of the consent agreement to all interested parties if EPA concludes that such draft is likely to achieve final agreement. A period of 30 days will be provided for submitting comments or written objections under paragraph (b)(8)(i)(B) of this section.

(7) If, prior to the expiration of the negotiation period, final agreement has not been reached, EPA may at its discretion provide one or more extensions, each of which may be up to 60 days, if it seems likely to EPA that a final agreement will be reached during that time. EPA will notify all interested parties of any extension(s).

(8)(i) EPA will enter into consent agreements only where there is a consensus among the Agency, one or more manufacturers and/or processors who agree to conduct or sponsor the testing, and all other interested parties who identify themselves in accordance with paragraph (b)(2) of this section. EPA will not enter into a consent agreement in either of the following circumstances:

(A) EPA and affected manufacturers and/or processors cannot reach a consensus in the timeframe described in paragraph (b)(5) of this section.

(B) A draft consent agreement is considered inadequate by other interested parties who have submitted timely written objections to the draft consent agreement, which provide a specific explanation of the grounds on which the draft agreement is objectionable.

(ii) EPA may reject objections described in paragraph (b)(8)(i)(B) of this section only where the Agency concludes the objections:

(A) Are not made in good faith;

(B) Are untimely;

(C) Do not involve the adequacy of the proposed testing program or other features of the agreement that may affect EPA's ability to fulfill the goals and purposes of the Toxic Substances Control Act (TSCA); or

(D) Are not accompanied by a specific explanation of the grounds on which the draft agreement is considered objectionable.

(iii) The unwillingness of some manufacturers and/or processors to sign the draft consent agreement does not, in itself, establish a lack of consensus if EPA concludes that those manufacturers and/or processors who are prepared to sign the agreement are capable of accomplishing the testing to be required and that the draft agreement will achieve the purposes of TSCA in all other respects.

(9) Where a consensus exists, as described in paragraph (b)(8)(i) of this section, concerning the contents of a draft consent agreement, the draft consent agreement will be circulated to EPA management and the parties that are to conduct or sponsor testing under the agreement, for final approval and signature.

(10) Upon final approval and signature of a consent agreement, EPA will publish a **Federal Register** document announcing the availability of the consent agreement and codifying (in subpart C of part 799) the name of the substance(s) to be tested and the citation to the **Federal Register** document.

§§ 790.24, 790.26, and 790.28 [Removed]

5. Remove §§ 790.24, 790.26, and 790.28.

Appendix A to Subpart E of Part 790 [Removed]

6. Remove Appendix A to subpart E of part 790.

[FR Doc. 2010–3242 Filed 2–18–10; 8:45 am]

BILLING CODE 6560–50–S

DEPARTMENT OF COMMERCE

National Oceanic and Atmospheric Administration

50 CFR Part 226

RIN 0648–AX06

Endangered and Threatened Species; Proposed Rule to Revise the Critical Habitat Designation for the Endangered Leatherback Sea Turtle; Extension of Public Comment Period

AGENCY: National Marine Fisheries Service (NMFS), National Oceanic and Atmospheric Administration (NOAA), Commerce.

ACTION: Proposed rule; extension of public comment period.

SUMMARY: On January 5, 2010, NMFS proposed regulations to revise the critical habitat designation for the endangered leatherback sea turtle (*Dermochelys coriacea*) by designating additional areas within the Pacific Ocean. Specific areas proposed for designation include two adjacent marine areas totaling approximately 46,100 square miles (119,400 square km) stretching along the California coast from Point Arena to Point Vincente; and one 24,500 square mile (63,455 square km) marine area stretching from Cape Flattery, WA, to the Umpqua River (Winchester Bay), OR, east of a line approximating the 2,000 meter depth contour. The areas proposed for designation comprise approximately 70,600 square miles (182,854 square km) of marine habitat. NMFS is extending the comment period on the proposed regulations until April 23, 2010.

DATES: Comments and information regarding this proposed rule must be received by April 23, 2010.

ADDRESSES: Written comments on the proposed rule may be submitted, identified by RIN 0648–AX06, and addressed to: David Cottingham, Chief, Marine Mammal and Sea Turtle Conservation Division, by any of the following methods:

- Electronic Submissions: Submit all electronic comments via the Federal eRulemaking Portal: *http://www.regulations.gov;*
- Facsimile (fax): 301–713–4060, Attn: David Cottingham;
- Mail: Chief, Marine Mammal and Sea Turtle Conservation Division, NMFS, Office of Protected Resources, 1315 East West Highway, Silver Spring, MD, 20910.

Instructions: No comments will be posted for public viewing until after the comment period has closed. All comments received are a part of the public record and will generally be posted to *http://www.regulations.gov* without change. NMFS may elect not to post comments that contain obscene or threatening content. All Personal Identifying Information (for example, name, address, etc.) voluntarily submitted by the commenter may be publicly accessible. Do not submit Confidential Business Information or otherwise sensitive or protected information.

NMFS will accept anonymous comments (enter N/A in the required fields, if you wish to remain anonymous). You may submit attachments to electronic comments in Microsoft Word, Excel, WordPerfect, or Adobe PDF file formats only. The proposed rule and supporting documents, including the biological report, economic report, initial regulatory flexibility analysis, and 4(b)(2) report, are also available electronically at *http://www.nmfs.noaa.gov/pr/species/turtles/leatherback.htm#documents.*

FOR FURTHER INFORMATION CONTACT: Sara McNulty, NMFS, Office of Protected Resources, 301–713–2322; Elizabeth Petras, NMFS Southwest Region, 562–980–3238; Steve Stone, NMFS Northwest Region, 503–231–2317.

SUPPLEMENTARY INFORMATION: On January 5, 2010, NMFS published the Proposed Rule to Revise the Critical Habitat Designation for the Endangered Leatherback Sea Turtle (75 FR 319). That **Federal Register** notice began NMFS' 60-day comment period, ending on March 8, 2010.

NMFS subsequently received a request from the Pacific Fishery Management Council (Council) to extend the public comment period for an additional 45 days. The date the initial comment period closes falls in the middle of the Council's March 2010 meeting, precluding an opportunity for the Council to formulate and transmit comments. Additionally, the Council felt this proposed rule would be more appropriately discussed at the April Council meeting, where they plan to develop their comments. In this notice NMFS is extending the public comment period until April 23, 2010, in order to allow adequate time for the Council and others to thoroughly review and thoughtfully comment on the proposed rule.

Authority: 16 U.S.C. 1531 *et seq.*

Dated: February 12, 2010.

Samuel D. Rauch III,

Deputy Assistant Administrator for Regulatory Programs, National Marine Fisheries Service.

[FR Doc. 2010–3275 Filed 2–18–10; 8:45 am]

BILLING CODE 3510–22–S

DEPARTMENT OF COMMERCE

National Oceanic and Atmospheric Administration

50 CFR Part 648

[Docket No. 100105009–0053–01]

RIN 0648–AY51

Fisheries of the Northeastern United States; Atlantic Deep-Sea Red Crab Fisheries; 2010 Atlantic Deep-Sea Red Crab Specifications

AGENCY: National Marine Fisheries Service (NMFS), National Oceanic and Atmospheric Administration (NOAA), Commerce.

ACTION: Proposed rule; request for comments.

SUMMARY: NMFS proposes 2010 specifications for the Atlantic deep-sea red crab fishery, including a target total allowable catch (TAC) and a fleet-wide days-at-sea (DAS) allocation. The implementing regulations for the Atlantic Deep-Sea Red Crab Fishery Management Plan (FMP) require NMFS to publish specifications for up to a period of 3 years and to provide an opportunity for public comment. The intent of this rulemaking is to specify the target TAC and other management measures in order to manage the red crab resource for fishing year (FY) 2010.

DATES: Written comments must be received no later than 5 p.m. eastern standard time, on March 22, 2010.

ADDRESSES: You may submit comments, identified by 0648–AY51, by any one of the following methods:

- Electronic Submissions: Submit all electronic public comments via the Federal eRulemaking Portal: *http://www.regulations.gov*
- Fax: (978) 281–9135, Attn: Regional Administrator.
- Mail: Patricia A. Kurkul, Regional Administrator, NMFS, Northeast Regional Office, 55 Great Republic Drive, Gloucester, MA 01930. Mark the outside of the envelope: "Comments on 2010 Red Crab Specifications."

Instructions: No comments will be posted for public viewing until after the comment period has closed. All comments received are a part of the public record and will generally be posted to *http://www.regulations.gov* without change. All Personal Identifying Information (for example, name, address, etc.) voluntarily submitted by the commenter may be publicly accessible. Do not submit Confidential Business Information or otherwise sensitive or protected information.

NMFS will accept anonymous comments (enter N/A in the required fields, if you wish to remain anonymous). You may submit attachments to electronic comments in Microsoft Word, Excel, WordPerfect, or Adobe PDF file formats only.

Copies of the specifications document, including the Environmental Assessment and Initial Regulatory Flexibility Analysis (EA/IRFA) and other supporting documents for the specifications, are available from Paul Howard, Executive Director, New England Fishery Management Council, 50 Water Street, Newburyport, MA 01950. The specifications document is also accessible via the Internet at *http://www.nero.noaa.gov.*

FOR FURTHER INFORMATION CONTACT: Moira Kelly, Fishery Policy Analyst, (978) 281–9218.

SUPPLEMENTARY INFORMATION:

Background

The FMP includes a specification process that requires the New England Fishery Management Council (Council) to recommend, on a triennial basis, a target TAC and a fleet DAS allocation that is consistent with that target TAC. In FY 2009, NMFS published an emergency rule to modify the target TAC and fleet DAS to be consistent with the recommendations of the Data Poor Stocks Working Group and Review Panel (Working Group). The Working Group recommended a reduction in the maximum sustainable yield (MSY) to 3.75–4.19 million lb (1,700–1,900 mt).

In keeping with the FMP in setting the target TAC at 95% of MSY, NMFS implemented a target TAC of 3.56 million lb (1,615 mt), and reduced the fleet DAS allocation from 780 DAS to 581 DAS. The fleet DAS allocation is divided equally among the vessels active in the fishery, which can vary from year to year. For FY 2009, the allocation was initially divided among four vessels; however, NMFS allowed the fourth vessel to opt out of the fishery for the FY and reallocated the fleet DAS to the remaining three vessels. It is expected that only three vessels will be active in the red crab fishery in FY 2010. The Council has requested waiving the 6–month notification requirement for opting out of the red crab fishery for FY 2010.

In September 2009, the Council's Scientific and Statistical Committee (SSC) accepted the Working Group's recommendation that MSY for red crab should be set within the range 3.75–4.19 million lb (1,700–1,900 mt), and recommended that the interim acceptable biological catch (ABC) be set commensurate with recent catch. The SSC determined recent catch to be the amount of red crab landed in FY 2007, which was 2.83 million lb (1,284 mt). The landings in FY 2007 were the lowest since the implementation of the FMP in 2002. During the Council's review of the SSC's recommendation at its September 2009 meeting, there was some concern among Council members that a quorum of SSC members was not present during the red crab discussion. As a result, the Council approved a motion to "send the red crab ABC back to the SSC for further analysis after new peer review information is available and that a quorum is present throughout SSC deliberations." Further, at its November 2009 meeting, the Council approved a follow-up motion to "direct the PDT and the SSC to review the SSC recommended interim ABC for red crab to determine if it should be revised." To date, the SSC has not reviewed its interim ABC recommendation, nor as any new peer-reviewed information been made available.

As described in the FMP, and specified at § 648.260(b)(2), if the effective date of a final rule falls after the start of the FY on March 1, fishing may continue under the specifications for the previous year. Because the specifications currently in place under the emergency action will expire on February 28, 2010, the target TAC and DAS allocation will revert to those specified in the regulations (5.928 million lb (2,688 mt) and 780 DAS, respectively) if the effective date of the final rule is after March 1. However, any DAS used by a vessel on or after March 1 will be counted against the DAS allocation the vessel ultimately receives for FY 2010.

Proposed Specifications

Despite the recommendation from the SSC that the target TAC not exceed an ABC of 2.83 million lb (1,284 mt), the Council recommended a target TAC and fleet DAS allocation equal to the 2009 emergency rule, 3.56 million lb (1,615 mt) and 581 DAS, respectively. The Council vote reflected the majority view of members that the ABC recommendation by the SSC is inappropriate, and that setting the ABC equal to a single year's landings, rather than a range of recent year's landings, is improper. The Council based its target TAC on the MSY advice from the Working Group, rather than that recommended by the SSC, because the Council considers the advice of the Working Group to provide an acceptably low risk of avoiding overfishing. The Council considers it their role to determine an acceptable level of risk of overfishing after receiving scientific information about what is the level of overfishing. To be consistent with the Council's SSC recommendation and relevant Magnuson-Stevens Fishery Conservation and Management Act (Magnuson-Stevens Act) provisions, NMFS is instead proposing to set the target TAC for FY 2010 equal to the SSC's recommended ABC (2.83 million lb; 1,284 mt) and a recalculated fleet DAS allocation of 464 DAS. This is the maximum allowable level of fishing effort that is consistent with the SSC recommendation; however, should the SSC revise its ABC recommendation prior to publication of final specifications for FY 2010, NMFS would consider revising these specifications to the levels recommended by the Council, so long as the revised specifications remain consistent with the advice of the SSC.

NMFS considers the best available science, as required under National Standard 2, is best represented by a recommendation from an SSC based on its review of the available scientific information. The Council's SSC accepted the Working Group's results and has recommended setting the overfishing limit (OFL) equal to the MSY range proposed by the Working Group. The SSC also concluded that "[g]iven the data-poor nature of the stock assessment, the SSC derived an interim ABC on the basis of status quo catch . . . Landings in 2007 were 1,284 mt [2.83 million lb], which is 68–76 percent of the approximate OFL. This magnitude of catch provides a 24- to 32–percent buffer between OFL and ABC, which is consistent with general guidance on buffers for data-moderate to data-poor stocks." The SSC also noted "that there should be a substantial buffer between OFL and ABC for data-poor stocks, an ABC based on the 2002–2007 average landings would contradict the [Working Group's advice]. Therefore, the SSC recommendation is for an interim ABC that is based on 2007 landings until a better estimate of OFL can be determined."

Other Proposed Measures

The Council has proposed waiving the 6–month notification requirement to opt out of the red crab fishery. Currently, vessel owners must inform NMFS of their intention to opt out of the fishery 6 months prior to the start of the next fishing; i.e., by September 1. The Council feels that because the specifications decisions were not made until November, it would seem unfair to industry to require vessel owners make business decisions without knowing what the target TAC would be for the upcoming FY. NMFS is proposing to adopt this waiver for FY 2010.

Classification

Pursuant to section 304(b)(1)(A) of the Magnuson-Stevens Act, the NMFS Assistant Administrator has preliminarily determined that this proposed rule is consistent with the Atlantic Deep-Sea Red Crab FMP, other provisions of the Magnuson-Stevens Act, and other applicable law, subject to further consideration after public comment.

This proposed rule has been determined to be not significant for purposes of Executive Order 12866.

An IRFA was prepared, as required by section 603 of the Regulatory Flexibility Act (RFA). The IRFA describes the economic impact this proposed rule, if adopted, would have on small entities. A description of the action, why it is being considered, and the legal basis for this action are contained at the beginning of this preamble and in the **SUMMARY.** A summary of the analysis follows. A copy of this analysis is available from the Council (see **ADDRESSES**).

There are no large entities that participate in this fishery, as defined in section 601 of the RFA; therefore, there are no disproportionate effects on small versus large entities. Information on costs in the fishery are not readily available, and individual vessel profitability cannot be determined directly; therefore, changes in gross revenues were used as a proxy for profitability. In the absence of

quantitative data, qualitative analyses were conducted.

The participants in the commercial sector are the owners of vessels issued limited access red crab vessel permits. There are five limited access red crab vessel permits, although only three vessels participated in the fishery in FY 2009.

The IRFA in the Draft EA analyzed three alternatives (including the no action alternative) for establishing a target TAC and fleet-wide DAS allocation for FY 2010. Alternative 1 (status quo) would set the MSY, OY, target TAC, and DAS allocation equal to those adopted through emergency action on April 6, 2009. If the status quo alternative were adopted, MSY would be 3.75 million lb (1,700 mt), OY and the target TAC would be 3.56 million lb (1,615 mt), and the fleet DAS would be 582. If the DAS were allocated equally to the four vessels that have been active in recent years, the DAS per vessel would be 146. If only three vessels remain in the fishery, the resulting DAS allocation would be 194 DAS for each active vessel. Alternative 2 would adopt the SSC's recommended interim ABC value of 2.83 million lb (1,284 mt) as the target TAC for FY 2010. The corresponding fleet DAS would be 464, based on the fleet average daily landings per charged DAS for the years 2006–2008 (6,106 lb/DAS; 2,770 kg/DAS). The fleet DAS would be divided by the five current limited access permits, or less depending on the number of permits that declare out of the fishery. As noted above, one of the limited access permits has been declared out of the fishery each year since 2004 and a second vessel opted out for FY 2009 as well. If four vessels remain in the fishery, the resulting DAS allocation would be 116 DAS for each active vessel. If only three vessels remain in the fishery, the resulting DAS allocation would be 155 DAS for each active vessel. If no action were taken (Alternative 3), MSY would revert to the 6.24–million-lb (2,830–mt) value established by the FMP, and OY and the target TAC for FY 2010 would revert to 5.93 million lb (2,689 mt). The fleet-wide DAS allocation would be 780 DAS. If these DAS were distributed equally to the four limited access vessels that have been active in the fishery in recent years, the allocation per vessel would be 195 DAS. If a second vessel were to opt out for FY 2010, the allocation for each of the remaining three vessels would be 260 DAS.

Under the Council's recommended specifications, approximately $730,000 of additional potential revenue could be available to the red crab fleet compared to NMFS's proposed specifications, and approximately $2.4 million less potential revenue than the No Action alternative. The current target TAC that would be maintained by the Council's alternative is greater than the average of the past 4 years' landings, 2 of which were higher, and 2 lower. For the past 2 years, the fleet has landed less than the target TAC that would result from the Council's recommended specifications. Whereas a limited market has been responsible for the shortfall in landings compared to the target TAC, red crab vessel owners have invested heavily in a new processing plant in New Bedford, MA, and have developed new marketing outlets with hopes to increase demand for their product.

The loss in revenue to the red crab fleet from NMFS's proposed specifications compared to the no action alternative would potentially be approximately $3.1 million. Potential losses from alternative fisheries that may result from the need to readjust vessel time among fisheries are uncertain. The loss in revenue to the red crab fleet from this target TAC compared to the Council recommended target TAC would potentially be approximately $730,000.

The target TAC prescribed by the FMP would allow for approximately $3.1 million more potential revenue for the red crab fleet in the short-term compared to NMFS's proposed target TAC, and approximately $2.4 million more revenue compared to the Council's recommended target. However, not implementing a target TAC consistent with the Working Group's advice could create potentially negative long-term economic effects due to overexploitation.

Authority: 16 U.S.C. 1801 *et seq.*

List of Subjects in 50 CFR Part 648

Fisheries, Fishing, Reporting and recordkeeping requirements.

Dated: February 12, 2010.

Samuel D. Rauch III,

Deputy Assistant Administrator for Regulatory Programs, National Marine Fisheries Service.

For the reasons stated in the preamble, 50 CFR part 648 is proposed to be amended as follows:

PART 648—FISHERIES OF THE NORTHEASTERN UNITED STATES

1. The authority citation for part 648 continues to read as follows:

Authority: 16 U.S.C. 1801 *et seq.*

2. In § 648.4, paragraph (a)(13)(i)(B)(*2*)(*ii*) is revised to read as follows:

§ 648.4 Vessel permits.

(a) * * *

(13) * * *

(i) * * *

(B) * * *

(*2*) * * *

(*ii*) A limited-access permit holder may choose to declare out of the red crab fishery for the next fishing year by submitting a binding declaration on a form supplied by the Regional Administrator, which must be received by NMFS at least 180 days before the last day of the current fishing year. NMFS will presume that a vessel intends to fish during the next fishing year unless such binding declaration is received at least 180 days before the last day of the current fishing year. Any limited-access permit holder who has submitted a binding declaration must submit either a new binding declaration or a renewal application for the year after which they were declared out of the fishery. For the 2010 fishing year only, the 6–month notification requirement is waived, and a vessel may be declared out of the fishery at any time prior to fishing under a limited access red crab DAS.

* * * * *

3. In § 648.260, paragraph (a)(1) is revised to read as follows:

§ 648.260 Specifications.

(a) * * *

(1) *Target total allowable catch.* The target TAC for fishing year 2010 will be 2.830 million lb (1,283 mt), unless modified pursuant to this paragraph.

* * * * *

4. In § 648.262, paragraph (b)(2) is revised to read as follows:

§ 648.262 Effort-control program for red crab limited access vessels.

* * * * *

(b) * * *

(2) *For fishing year 2010.* Each limited access permit holder shall be allocated 93 DAS unless one or more vessels declares out of the fishery consistent with § 648.4(a)(13)(i)(B)(*2*) or the TAC is adjusted consistent with § 648.260.

* * * * *

[FR Doc. 2010–3270 Filed 2–18–10; 8:45 am]

BILLING CODE 3510–22–S

Notices

Federal Register
Vol. 75, No. 33
Friday, February 19, 2010

This section of the FEDERAL REGISTER contains documents other than rules or proposed rules that are applicable to the public. Notices of hearings and investigations, committee meetings, agency decisions and rulings, delegations of authority, filing of petitions and applications and agency statements of organization and functions are examples of documents appearing in this section.

DEPARTMENT OF AGRICULTURE

Submission for OMB Review; Comment Request

February 12, 2010.

The Department of Agriculture has submitted the following information collection requirement(s) to OMB for review and clearance under the Paperwork Reduction Act of 1995, Public Law 104–13. Comments regarding (a) whether the collection of information is necessary for the proper performance of the functions of the agency, including whether the information will have practical utility; (b) the accuracy of the agency's estimate of burden including the validity of the methodology and assumptions used; (c) ways to enhance the quality, utility and clarity of the information to be collected; (d) ways to minimize the burden of the collection of information on those who are to respond, including through the use of appropriate automated, electronic, mechanical, or other technological collection techniques or other forms of information technology should be addressed to: Desk Officer for Agriculture, Office of Information and Regulatory Affairs, Office of Management and Budget (OMB), *OIRA_Submission@OMB.EOP.GOV* or fax (202) 395–5806 and to Departmental Clearance Office, USDA, OCIO, Mail Stop 7602, Washington, DC 20250–7602. Comments regarding these information collections are best assured of having their full effect if received within 30 days of this notification. Copies of the submission(s) may be obtained by calling (202) 720–8681.

An agency may not conduct or sponsor a collection of information unless the collection of information displays a currently valid OMB control number and the agency informs potential persons who are to respond to the collection of information that such persons are not required to respond to the collection of information unless it displays a currently valid OMB control number.

Rural Utilities Service

Title: Request for Release of Lien and/or Approval of Sale

OMB Control Number: 0572–0041

Summary of Collection: The Rural Utilities Service (RUS) is a credit agency of the U.S. Department of Agriculture (USDA) that makes mortgage loans and loan guarantees to finance electric, telecommunications, and water and waste facilities in rural areas. RUS manages loan programs in accordance with the Rural Electrification Act (RE Act) of 1936, 7 U.S.C. 901 *et seq.,* as amended (RE Act). A 1949 amendment to the RE Act established the telephone program in RUS with the purpose of making loans to furnish and improve rural telephone service. Section 201 of the RE Act provides that loans shall not be made unless RUS finds and certifies that the security for the loan is reasonably adequate and that the loan will be repaid within the time agreed. In addition to providing loans and loan guarantees, one of RUS main objectives is to safeguard loan security until the loan is repaid.

Need and Use of the Information: A borrower's assets provide the security for a Government loan. The selling of assets reduces the security and increases the risk of loss to the Government. A borrower seeking permission to sell some of its assets uses RUS Form 793. The form contains detailed information regarding the proposed sale. If the information in Form 793 is not collected when capital assets are sold, the capital assets securing the Government's loans could be liquidated and the Government's security either eliminated entirely or diluted to an undesirable level. This increases the risk of loss to the Government in the case of a default.

Description of Respondents: Not-for-profit institutions; State, local or Tribal government

Number of Respondents: 40

Frequency of Responses: Reporting: On occasion

Total Burden Hours: 110

Rural Utilities Service

Title: 7 CFR Part 1738, Rural Broadband Loan and Loan Guarantee

OMB Control Number: 0572–0130

Summary of Collection: Title VI, Rural Broadband Access, of the Rural Electrification Act of 1936, as amended (RE Act), provides loans and loan guarantees to fund the cost of construction, improvement, or acquisition of facilities and equipment for the provision of broadband service in eligible rural communities in State and territories of the United States. The regulation prescribes the types of loans available, facilities financed and eligible applicants, as well as minimum credit support requirements considered for a loan. In addition, Title VI of the RE Act requires that Rural Utilities Service (RUS) make or guarantee a loan only if there is reasonable assurance that the loan, together with all outstanding loans and obligations of the borrower, will be repaid in full within the time agreed.

Need and Use of the Information: RUS will collect information to determine whether an applicant's eligibility to borrow from RUS under the terms of the RE Act and that the applicant complies with statutory, regulatory and administrative eligibility requirements for loan assistance. RUS will use the information to determine that the Government's security for loans made are reasonable, adequate and that the loans will be repaid within the time agreed.

Description of Respondents: Business or other for-profit; not-for-profit institutions

Number of Respondents: 40

Frequency of Responses: Reporting: On occasion

Total Burden Hours: 13,480

Charlene Parker,

Departmental Information Collection Clearance Officer.

[FR Doc. 2010–3163 Filed 2–18–10; 8:45 am]

BILLING CODE 3410–15–P

DEPARTMENT OF AGRICULTURE

Farm Service Agency

Commodity Credit Corporation

Notice of Availability of the Draft Supplemental Environmental Impact Statement for the Conservation Reserve Program

AGENCY: Commodity Credit Corporation and Farm Service Agency, USDA.

ACTION: Notice of availability (NOA) and request for comments.

SUMMARY: This notice announces that the Farm Service Agency (FSA), on behalf of the Commodity Credit Corporation (CCC), has completed a Draft Supplemental Environmental Impact Statement (SEIS) to examine the potential environmental consequences associated with implementing changes to the Conservation Reserve Program (CRP) required by the Food, Conservation, and Energy Act of 2008 (2008 Farm Bill), and assist in developing new regulations. FSA is requesting comments on the Draft SEIS.

DATES: We will consider comments that we receive by April 5, 2010.

ADDRESSES: We invite you to submit comments on this Draft SEIS. In your comments, include the volume, date, and page number of this issue of the **Federal Register.** You may submit comments by any of the following methods:

- *E-Mail: CRPcomments@tecinc.com.*
- *Online:* Go to the Web site at *http://public.geo-marine.com.* Follow the online instructions for submitting comments.
- *Federal eRulemaking Portal:* Go to *http://www.regulations.gov.* Follow the online instructions for submitting comments.
- *Fax:* (757) 594–1469.
- *Mail:* CRP SEIS, c/o TEC, 11817 Canon Blvd., Suite 300, Newport News, VA 23606.
- *Hand Delivery or Courier:* Deliver comments to the above address.

Comments may be inspected in the Office of the Director, CEPD, FSA, USDA, 1400 Independence Ave., SW., Room 4709 South Building, Washington, DC, between 8:00 a.m. and 4:30 p.m., Monday through Friday, except holidays. A copy of the Draft SEIS is available through the FSA home page at *http://www.fsa.usda.gov/FSA/webapp?area=home&subject=ecrc&topic=nep-cd* or at *http://public.geo-marine.com.*

FOR FURTHER INFORMATION CONTACT: Matthew Ponish, National Environmental Compliance Manager, USDA, FSA, CEPD, Stop 0513, 1400 Independence Ave., SW., Washington, DC 20250–0513, (202) 720–6853, or e-mail: *matthew.ponish@wdc.usda.gov.* Persons with disabilities who require alternative means for communication (Braille, large print, audio tape, etc.) should contact the USDA Target Center at (202) 720–2600 (voice and TDD).

SUPPLEMENTARY INFORMATION: The 2008 Farm Bill (Pub. L. 110–246) authorizes certain changes to CRP. A Programmatic Environmental Impact Statement (PEIS) was completed in 2003 to evaluate the environmental consequences of implementing the Farm Security and Rural Investment Act of 2002 (2002 Farm Bill) provisions for CRP and a Record of Decision was published May 8, 2003 (68 FR 24848–24854). This SEIS tiers from the 2003 PEIS and, with certain exceptions, only evaluates those provisions changed in the 2008 Farm Bill governing CRP not previously addressed. The changes assessed in the SEIS include:

- In general, the CRP purposes now explicitly include addressing issues raised by state, regional and national conservation initiatives (see 16 U.S.C. 3831(a)).
- The cropping history requirements are updated to four of six years in the period from 2002 to 2007 (see 16 U.S.C. 3831b(g)(2)).
- The enrollment authority is set at 39.2 million acres through fiscal year (FY) 2009 and reduced to 32.0 million acres for fiscal years 2010, 2011, and 2012 (see 16 U.S.C. 3831(d)).
- Alfalfa and multiyear grasses and legumes in a rotation practice with an agricultural commodity may contribute towards meeting crop history requirements (see 16 U.S.C. 3831(g)).
- The authority is granted to exclude acreage enrolled under Continuous Signup and the Conservation Reserve Enhancement Program from the 25 percent cropland limitation, provided county government concurs (see 16 U.S.C. 3844 (f)(3)).
- Management activities by the participant throughout the contract term to implement the conservation plan (see 16 U.S.C. 3832(a)(5)).
- CCC may provide exceptions to general prohibitions (see 16 U.S.C. 3832 (a)(8)) on use of the property including:
  - Managed harvesting with appropriate vegetation management during named periods and with a payment reduction,
  - Managed harvesting for biomass with appropriate vegetation management during named periods and with a payment reduction,
  - Grazing of invasive species with appropriate vegetation management during named periods and with a payment reduction, and
  - Installation of wind turbines with appropriate vegetation management during named periods and with a payment reduction.
- Utilization of dryland and cash rental rates developed by the National Agricultural Statistics Service (see 16 U.S.C. 3834(c)(5)) for establishment of annual CRP rental rates.
- New incentives for socially disadvantaged farmers and ranchers, as well as limited resource farmers and ranchers and Indian tribes, to participate in conservation programs (see 16 U.S.C. 3844 (a)).
- Development of habitat for native and managed pollinators and use of CRP conservation practices that will enhance habitat for pollinators (see 16 U.S.C. 3844(h)).

Under the National Environmental Policy Act (NEPA), the EIS process provides a means for the public to provide input on program implementation alternatives and on environmental concerns. CCC provided notice of its intent (NOI) to prepare the CRP SEIS in the **Federal Register** on September 3, 2009 (74 FR 45606–45607), and solicited public comment on the proposed SEIS for CRP. Nine public scoping meetings were held in September and October 2009 to solicit comments on the proposed alternatives and to identify environmental concerns.

FSA considered comments gathered from the scoping process, initiated with the September 3, 2009 NOI, to develop the alternatives analyzed for the administration and implementation of CRP. The Draft SEIS assesses the following alternatives with the recommended changes to CRP:

- *No Action Alternative*—continuation of CRP as currently implemented.
- *Action Alternative 1*—full implementation of the applicable 2008 Farm Bill Provisions in accordance with current procedures.
- *Action Alternative 2*—implementation of CRP in accordance with applicable 2008 Farm Bill provisions exercising discretion that differs from current procedures.

The Draft SEIS also provides a means for the public to voice any suggestions they may have about the program and any ideas for rulemaking. The Draft SEIS can be reviewed online at: *http://www.fsa.usda.gov/FSA/webapp?area=home&subject=ecrc&topic=nep-cd* or at *http://public.geo-marine.com.*

The Draft SEIS was completed consistent with the National Environmental Policy Act (NEPA, 42 U.S.C. 4321–4347), the Council on Environmental Quality (CEQ) Regulations for Implementing the Procedural Provisions of NEPA (40 CFR parts 1500–1508), and FSA's regulations for compliance with NEPA (7 CFR part 799).

Signed in Washington, DC, on February 12, 2010.

Jonathan W. Coppess,

Administrator, Farm Service Agency, and Executive Vice President, Commodity Credit Corporation.

[FR Doc. 2010–3272 Filed 2–18–10; 8:45 am]

BILLING CODE 3410–05–P

DEPARTMENT OF AGRICULTURE

Forest Service

Notice of Idaho Panhandle Resource Advisory Committee Meeting

AGENCY: Forest Service, USDA.

ACTION: Notice of meeting.

SUMMARY: Pursuant to the authorities in the Federal Advisory Committee Act (Pub. L. 92–463) and under the Secure Rural Schools and Community Self-Determination Act of 2000 (Public Law 110–343) the Idaho Panhandle National Forest's Idaho Panhandle Resource Advisory Committee will meet Friday, February 19, 2010, at 9 a.m. in Coeur d'Alene, Idaho for a business meeting. The business meeting is open to the public.

DATES: February 19, 2010.

ADDRESSES: The meeting location is the Idaho Panhandle National Forests' Supervisor's Office, located at 3815 Schreiber Way, Coeur d'Alene, Idaho 83815.

FOR FURTHER INFORMATION CONTACT: Ranotta K. McNair, Forest Supervisor and Designated Federal Official, at (208) 765–7369.

SUPPLEMENTARY INFORMATION: The meeting agenda will focus on reviewing proposals for forest projects and recommending funding during the business meeting. The public forum begins at 11 a.m.

Dated: February 10, 2010.

Ranotta K. McNair,

Forest Supervisor.

[FR Doc. 2010–3066 Filed 2–18–10; 8:45 am]

BILLING CODE 3410–11–M

DEPARTMENT OF AGRICULTURE

Forest Service

Eastern Washington Cascades Provincial Advisory Committee and the Yakima Provincial Advisory Committee

AGENCY: Forest Service, USDA.

ACTION: Notice of meeting.

SUMMARY: The Eastern Washington Cascades Provincial Advisory Committee and the Yakima Provincial Advisory Committee will meet on March 9, 2010 at the Sunnyslope Fire Station, 206 Easy Street, Wenatchee, WA. During this meeting information will be shared about Okanogan-Wenatchee National Forest Restoration Strategy, Wilderness Society North Cascades Proposal, and U.S. Fish & Wildlife Service update on the justification to not list the Pika as a threatened and endangered species. All Eastern Washington Cascades and Yakima Province Advisory Committee meetings are open to the public.

FOR FURTHER INFORMATION CONTACT: Direct questions regarding this meeting to Becki Heath, Designated Federal Official, USDA, Okanogan-Wenatchee National Forest, 215 Melody Lane, Wenatchee, Washington 98801, phone 509–664–9200.

Dated: February 10, 2010.

Rebecca Lockett Heath,

Designated Federal Official, Okanogan-Wenatchee National Forest.

[FR Doc. 2010–3286 Filed 2–18–10; 8:45 am]

BILLING CODE 3410–11–P

DEPARTMENT OF AGRICULTURE

Forest Service

Oil and Gas Leasing on Lands Administered by the Dixie National Forest, Supplemental Information Report—Air Resources

AGENCY: Forest Service, USDA.

ACTION: Notice of availability—supplemental information report.

SUMMARY: The USDA Forest Service announces the availability of an additional information report to the Oil and Gas Leasing on Lands Administered by the Dixie National Forest Final Environmental Impact Statement (FEIS). The purpose of this supplemental report is to provide additional analysis and disclosure on the effects of the proposed action on air resources and climate change and to provide the opportunity for public comment on the additional information.

DATES: To ensure that comments will be considered, the FS must receive written comments on the Oil and Gas Leasing on Lands Administered by the Dixie National Forest, Supplemental Information Report—Air Resources within 30 days following the date this Notice of Availability is published in the **Federal Register.** Comments regarding the SIR should be directed to the issues of air resources and climate change and are for additional analysis purposes only. All public comments submitted by December 15, 2008 on the DEIS are still applicable and have been reviewed by the Forest. You must have commented during the 60-day DEIS comment period to be eligible to appeal the upcoming decision.

ADDRESSES: You may submit comments related to the Air Resources—Supplemental Information Report by any of the following methods:

- *Web site: http://www.fs.fed.us/r4/dixie/projects/oil_gas/index.shtml.*
- *E-mail: dixie_oil_gas_eis_comments@fs.fed.us* (e-mail comments must be in MS Word [*.doc) or rich text format (*.rtf)].
- *Fax:* (435) 865–3791.
- *Mail:* Ms. Susan Baughman, Dixie National Forest, USDA Forest Service, Oil and Gas Leasing Project, 1789 N. Wedgewood Lane, Cedar City, Utah 84721.

CDs containing the SIR are available upon request to Susan Baughman, EIS Project Manager, 1789 N. Wedgewood Lane, Cedar City, Utah 84721; 435–865–3703.

FOR FURTHER INFORMATION CONTACT: Ms. Susan Baughman, Dixie National Forest, USDA Forest Service, Oil and Gas Leasing Project Leader, 1789 N. Wedgewood Lane, Cedar City, Utah 84721.

SUPPLEMENTARY INFORMATION: This announces the availability of the Supplemental Information Report (SIR) for the Dixie National Forest (Forest) Oil & Gas Leasing Environmental Impact Statement (EIS). The Draft EIS for this project was issued for public comment on October 17, 2008. During the 60-day comment period a number of comments were received relative to the impact analysis for air resources. In their comments, the Environmental Protection Agency requested that a more rigorous air-quality modeling study be completed for inclusion in the Final EIS. They recommended that this study use different air emission factors for the subject facilities-based emission limitations, which would become effective in the future. This revised modeling was conducted in collaboration with the EPA and the Utah Division of Air Quality and the report on this modeling was revised and is hereby being made available for public review.

In January 2009, the U.S. Forest Service issued guidance on including climate change in the environmental analyses for future planning decisions. In accordance with this direction and in response to public comment, the Forest has prepared a new appendix to the EIS that considers the effects of the proposed oil and gas leasing on climate change and the effects of climate change

on the proposed action. This appendix is hereby being made available for public review.

As a result of the two new sources of information described above, the Dixie National Forest has modified the Air Resources sections of the EIS to incorporate the revised air quality impact modeling results and the evaluation of climate change. These revised air resources sections of the EIS are being made available for public review at this time as the main body of the SIR, with references to the revised Air Quality Modeling Report and the Climate Change Report. The SIR does not address any other issues or analysis.

Before including your address, phone number, e-mail address, or other personal identifying information in your comment, you should be aware that your entire comment—including your personal identifying information—may be made publicly available at any time. While you can ask us in your comment to withhold your personal identifying information from public review, we cannot guarantee that we will be able to do so.

(Authority: 40 CFR 1501.7 and 1508.22; Forest Service Handbook 1909.15, Section 21)

Dated: February 8, 2010.

Robert G. MacWhorter,

Forest Supervisor—Dixie National Forest.

[FR Doc. 2010–3136 Filed 2–18–10; 8:45 am]

BILLING CODE 3410–11–P

COMMISSION ON CIVIL RIGHTS

Hearing on the Department of Justice's Actions Related to the New Black Panther Party Litigation and Its Enforcement of Section 11(b) of the Voting Rights Act

AGENCY: United States Commission on Civil Rights.

ACTION: Notice of hearing.

Date and Time: Friday, March 19, 2010; 9:30 a.m. EST.

Place: U.S. Commission on Civil Rights, 624 Ninth Street, NW., Room 540, Washington, DC 20425.

Summary: Notice is hereby given pursuant to the provisions of the Civil Rights Commission Amendments Act of 1994, 42 U.S.C. 1975a, and 45 CFR 702.3., that public hearings before the U.S. Commission on Civil Rights will commence on Friday, March 19, 2010, beginning at 9:30 a.m. EST in Washington, DC at the Commission's offices located at 624 Ninth Street, NW., Room 540, Washington, DC 20425. An executive session not open to the public may be convened at any appropriate time before or during the hearing.

The purpose of this hearing is to collect information within the jurisdiction of the Commission, under 42 U.S.C. 1975a, related particularly to the Department of Justice's actions in the New Black Panther Party Litigation and enforcement of Section 11(b) of the Voting Rights Act.

The Commission is authorized to hold hearings and to issue subpoenas for the production of documents and the attendance of witnesses pursuant to 45 CFR 701.2. The Commission is an independent bipartisan, fact finding agency authorized to study, collect, and disseminate information, and to appraise the laws and policies of the Federal Government, and to study and collect information with respect to discrimination or denials of equal protection of the laws under the Constitution because of race, color, religion, sex, age, disability, or national origin, or in the administration of justice. The Commission has broad authority to investigate allegations of voting irregularities even when alleged abuses do not involve discrimination.

Contact Person for Further Information: Lenore Ostrowsky, Acting Chief, Public Affairs Unit (202) 376–8591. TDD: (202) 376–8116.

Persons with a disability requiring special services, such as an interpreter for the hearing impaired, should contact Pamela Dunston at least seven days prior to the scheduled date of the hearing at 202–376–8105. TDD: (202) 376–8116.

Dated: February 12, 2010.

David Blackwood,

General Counsel.

[FR Doc. 2010–3168 Filed 2–18–10; 8:45 am]

BILLING CODE 6335–01–P

DEPARTMENT OF COMMERCE

Submission for OMB Review; Comment Request

The Department of Commerce will submit to the Office of Management and Budget (OMB) for clearance the following proposal for collection of information under the provisions of the Paperwork Reduction Act (44 U.S.C. chapter 35).

Agency: U.S. Census Bureau.

Title: Current Population Survey June Fertility Supplement.

OMB Control Number: 0607–0610.

Form Number(s): None.

Type of Request: Reinstatement, without change, of an expired collection.

Burden Hours: 250 hours.

Number of Respondents: 30,000.

Average Hours per Response: 30 seconds.

Needs and Uses: The purpose of this request for review is to obtain clearance for the supplemental inquiry concerning fertility to be conducted biennially in conjunction with the June Current Population Survey (CPS). The fertility questions will be asked of females 15–44 years of age. The June Fertility Supplement, like the June 2008 Fertility Supplement, differs from the June 1998 and the June 1995 supplements because it only includes fertility items. The 1998 supplement contained fertility and birth expectations items. The 1995 supplement contained fertility and marital history items.

The data collected from this supplement are used primarily by government and private analysts to project future population growth, to analyze childbearing patterns, and to assist policymakers in making decisions that are affected by changes in family size and composition. Past studies have documented profound changes to historical patterns that have occurred in fertility rates, family structures, premarital births, and the timing of the first birth. The CPS characteristics, such as family income, household relationships, and labor force status, when matched with fertility data, can produce estimates of potential needs families may have for governmental assistance: for example, aid to families with dependent children, childcare, and maternal health care for single-parent households. The fertility data also assist researchers and analysts who explore such important issues as premarital childbearing and postponement of childbirth because of educational or occupational responsibilities and goals. As a result of the rapid changes in the economy, the June Fertility supplement offers analysts a key indicator of family economic resources, namely, the employment status of women with infant children.

Item SF1 establishes the number of children ever born, and Item SF2 asks the month and year the last child was born. Fertility Items SF1 and SF2 were included in the June CPS Supplement annually since 1971, with the exception of 1989, 1991, 1993, 1996, 1997, and 1999. Discontinuance of the Fertility Supplement would interrupt a data series, which is built upon previous surveys first collected in June 1971. Without current fertility data, data for the most recent female cohorts (age 18–24) would be missing in fertility projections. The statistics and projections from these data are useful

for legislators in the public sector and businesses that make policy and resource decisions about childcare, development, and changes in family life.

Affected Public: Individuals or households.

Frequency: Biennially.

Respondent's Obligation: Voluntary.

Legal Authority: Title 13, United States Code, Section 182.

OMB Desk Officer: Brian Harris-Kojetin, (202) 395–7314.

Copies of the above information collection proposal can be obtained by calling or writing Diana Hynek, Departmental Paperwork Clearance Officer, (202) 482–0266, Department of Commerce, Room 6625, 14th and Constitution Avenue, NW., Washington, DC 20230 (or via the Internet at *dhynek@doc.gov*).

Written comments and recommendations for the proposed information collection should be sent within 30 days of publication of this notice to Brian Harris-Kojetin, OMB Desk Officer either by fax (202–395–7245) or e-mail (*bharrisk@omb.eop.gov*).

Dated: February 12, 2010.

Glenna Mickelson,

Management Analyst, Office of the Chief Information Officer.

[FR Doc. 2010–3139 Filed 2–18–10; 8:45 am]

BILLING CODE 3510–07–P

DEPARTMENT OF COMMERCE

Submission for OMB Review; Comment Request

The Department of Commerce will submit to the Office of Management and Budget (OMB) for clearance the following proposal for collection of information under the provisions of the Paperwork Reduction Act (44 U.S.C. chapter 35).

Agency: U.S. Census Bureau.

Title: Survey of State Research and Development.

OMB Control Number: 0607–0933.

Form Number(s): SRD–1.

Type of Request: Reinstatement, without change, of an expired collection.

Burden Hours: 958.

Number of Respondents: 552.

Average Hours per Response: 1 hour and 44 minutes.

Needs and Uses: The U.S. Census Bureau is requesting a reinstatement of the collection of state government research and development (R&D) expenditures that is conducted by the Census Bureau and for the benefit of the National Science Foundation (NSF).

This collection is authorized under Title 13, Section 8(b) of the United States Code, which allows the Secretary of Commerce to "make special statistical compilations and surveys, for departments, agencies and establishments of the Federal Government." Title 15, Section 1525 of the United States Code also authorizes the Secretary of Commerce "upon the request of any person, firm, organization, or others, public or private, to make special studies on matters within the authority of the Department of Commerce."

The NSF Act of 1950 includes a statutory charge to "provide a central clearinghouse for the collection, interpretation, and analysis of data on scientific and engineering resources and to provide a source of information for policy formulation by other agencies in the Federal Government." Under the aegis of this legislative mandate, NSF and its predecessors have sponsored surveys of R&D since 1953, including the Survey of Industrial Research and Development and the Survey of State Research and Development Expenditures. This survey has helped to expand the scope of R&D collections to include state governments, where previously there had been no established collection efforts.

NSF sponsors surveys of R&D activities of Federal agencies, higher education institutions, and private industries. The data collected from this survey instrument fills the void that previously existed for collection of R&D activities at the state government department or agency level. The results of these surveys provide a consistent information base for government officials, industry professionals, and researchers to use in formulating public policy and planning in science and technology. These surveys allow for the analysis of current and historical trends in research and development in the U.S., as well as, comparisons with other countries.

The Census Bureau, serving as collection agent, employs a methodology similar to the one used to collect information from state and local governments on established censuses and surveys. This methodology involves identifying a central coordinator in each state who will assist Census Bureau staff in identifying appropriate state departments/agencies to survey. These state contacts also verify data responses and assist with nonresponse follow-up. The collection approach using a central state contact is used successfully at the Census Bureau in surveys of local school districts, municipal and county governments, and state government finances.

Items on the survey form include research and development expenditures according to the source of funding, by performer of the work (internal and external to state agencies), and by character (*i.e.,* basic, applied, or developmental). Final results produced by NSF contain state and national estimates and are useful to a variety of data users interested in research and development performance including: the National Science Board; the Office of Management and Budget; the Office of Science and Technology Policy and other science policy makers; institutional researchers; and private organizations.

Legislators, policy officials, and researchers rely on statistics to make informed decisions about R&D investment at the Federal, state, and local level. These statistics are derived from the existing NSF sponsored surveys of Federal agencies, higher education institutions, and private industry. The total picture of R&D expenditures, however, had been incomplete due to the lack of relevant and timely data from state governments prior to this survey collection, which now fills that void.

State government officials and policy makers garner the most benefit from the results of this survey. Governors and legislatures need a reliable, comprehensive source of data to help in evaluating how best to attract the high-tech, R&D industries to their state. Officials are able to evaluate their investment in R&D based on comparisons with other states. These comparisons include the sources of funding, the type of R&D being conducted, and the actual performer of the work.

The information collected from the Survey of State R&D is used at the Federal level to assess and direct investment in technology and economic issues. Congressional committees and the Congressional Research Service use results of the R&D surveys extensively. Inquiries made to NSF by congressional staff concerning industry and academic data are well documented. In addition, officials from several Federal agencies make use of the data.

NSF also uses data from this survey in various publications produced about the state of R&D in the U.S. The Science and Engineering Indicators series, for example, is a biennial report mandated by Congress and describes quantitatively the condition of the country's R&D efforts. Results are also likely to be included in the National Patterns of Research and Development Resources tabulations and in the

Science and Engineering Indicators report.

Private industry, either individually or through trade associations, will also find these data useful, particularly statistics concerning funds transferred from state agencies to businesses. The current R&D surveys often receives prominent mention in industry publications such as *Research and Development* magazine, which releases its "State of Global R&D" report.

The availability of state R&D data on the Internet makes this survey visible to several other users, as well. Media, university researchers, nonprofit organizations, and foreign government officials are also consumers of state R&D statistics. All users are able to utilize this information in an attempt to better understand the nation's R&D resources.

Affected Public: State, local or Tribal Government.

Frequency: Biennially.

Respondent's Obligation: Voluntary.

Legal Authority: 13 U.S.C., Section 8(b); 15 U.S.C., Section 1525; NSF Act of 1950.

OMB Desk Officer: Brian Harris-Kojetin, (202) 395–7314.

Copies of the above information collection proposal can be obtained by calling or writing Diana Hynek, Departmental Paperwork Clearance Officer, (202) 482–0266, Department of Commerce, Room 6625, 14th and Constitution Avenue, NW., Washington, DC 20230 (or via the Internet at *dhynek@doc.gov*).

Written comments and recommendations for the proposed information collection should be sent within 30 days of publication of this notice to Brian Harris-Kojetin,

OMB Desk Officer either by fax (202–395–7245) or e-mail (*bharrisk@omb.eop.gov*).

Dated: February 12, 2010.

Glenna Mickelson,

Management Analyst, Office of the Chief Information Officer.

[FR Doc. 2010–3155 Filed 2–18–10; 8:45 am]

BILLING CODE 3510–07–P

DEPARTMENT OF COMMERCE

National Oceanic and Atmospheric Administration

RIN 0648–XU26

Endangered Species; File No. 14381

AGENCY: National Marine Fisheries Service (NMFS), National Oceanic and Atmospheric Administration (NOAA), Commerce.

ACTION: Issuance of permit.

SUMMARY: Notice is hereby given that NMFS Pacific Islands Region, 1601 Kapiolani Boulevard, Honolulu, HI 96814 has been issued a permit to take green (*Chelonia mydas*), leatherback (*Dermochelys coriacea*), loggerhead (*Caretta caretta*), olive ridley (*Lepidochelys olivacea*), and hawksbill (*Eretmochelys imbricata*) sea turtles for purposes of scientific research.

ADDRESSES: The permit and related documents are available for review upon written request or by appointment in the following office(s):

Permits, Conservation and Education Division, Office of Protected Resources, NMFS, 1315 East-West Highway, Room 13705, Silver Spring, MD 20910; phone (301)713–2289; fax (301)713–0376; and

Pacific Islands Region, NMFS, 1601 Kapiolani Blvd., Rm 1110, Honolulu, HI 96814–4700; phone (808)944–2200; fax (808)973–2941.

FOR FURTHER INFORMATION CONTACT: Kate Swails or Amy Hapeman, (301)713–2289.

SUPPLEMENTARY INFORMATION: On May 22, 2009, notice was published in the **Federal Register** (74 FR 23995) that a request for a scientific research permit had been submitted by the above-named organization. The requested permit has been issued under the authority of the Endangered Species Act of 1973, as amended (ESA; 16 U.S.C. 1531 *et seq.*) and the regulations governing the taking, importing, and exporting of endangered and threatened species (50 CFR parts 222–226).

The researchers will collect scientific data on sea turtles incidentally captured in the Hawaii Deep-Set Longline Fishery, the Hawaii Shallow-Set Longline Fishery, and the American Samoa Longline Fishery. These data will assist NMFS efforts to understand sea turtle interactions with the fisheries and to mitigate their threat to these species. The applicant will flipper tag, measure, photograph, tissue sample, and attach satellite tags to an anticipated annual take of up to 46 loggerhead, 16 leatherback, 1 green, and 4 olive ridley sea turtles captured in the Hawaii Shallow-Set Longline Fishery; up to 6 loggerhead, 6 leatherback, 12 green, 12 olive ridley, and 6 hawksbill sea turtles captured in the American Samoa Longline Fishery; and up to 6 (18 over three years) loggerhead, 13 (39 over three years) leatherback, 7 (21 over three years) green, and 41 (123 over three years) olive ridley sea turtles captured in the Hawaii Deep-Set Longline Fishery. The research will occur in the Pacific Ocean through the permit's expiration on March 1, 2015. No mortalities are expected from the research. Researchers would also collect sea turtle carcasses of animals killed in fishery activities that occur in the Pacific Ocean.

Issuance of this permit, as required by the ESA, was based on a finding that such permit (1) was applied for in good faith, (2) will not operate to the disadvantage of such endangered or threatened species, and (3) is consistent with the purposes and policies set forth in section 2 of the ESA.

Dated: February 12, 2010.

P. Michael Payne,

Chief, Permits, Conservation and Education Division, Office of Protected Resources, National Marine Fisheries Service.

[FR Doc. 2010–3274 Filed 2–18–10; 8:45 am]

BILLING CODE 3510–22–S

DEPARTMENT OF COMMERCE

National Oceanic and Atmospheric Administration

RIN 0648–XU44

Western Pacific Fishery Management Council; Public Meeting

AGENCY: National Marine Fisheries Service (NMFS), National Oceanic and Atmospheric Administration (NOAA), Commerce.

ACTION: Notice of public meetings

SUMMARY: The Western Pacific Fishery Management Council (Council) will hold a half day meeting of its Pelagics Plan Team (PPT) in Honolulu, HI to discuss fishery issues and develop recommendations for future management.

DATES: The meeting of the PPT will be held on March 4, 2010, from 1 p.m. to 5 p.m.

ADDRESSES: The meeting will be held at the Council Office Conference Room, Western Pacific Fishery Management Council, 1164 Bishop St., Suite 1400, Honolulu, HI 96813; telephone: (808) 522–8220.

FOR FURTHER INFORMATION CONTACT: Kitty M. Simonds, Executive Director; telephone: (808) 522–8220.

SUPPLEMENTARY INFORMATION: The Pelagic Plan Team will be convened at the Council Office, 1164 Bishop Street, Suite 1400, Honolulu, HI 96814 between 1 p.m. and 5 p.m. Interested parties who are unable to attend in person will be able to participate via teleconference using the Council's teleconferencing facility (1–888–482–3560, pass code 5228220). The PPT will meet on Thursday, March 4, 2010 at the Council Conference Room to discuss the following agenda items:

Thursday March 4, 2010, 1 p.m.

1. Introduction
2. Hawaii longline bigeye tuna catch limit management
3. Hawaii deep-set longline swordfish trip catch limit
4. Regulatory definition of shortline fishing gear
5. Non-commercial fishing for Pelagic Management Unit Species in Rose Atoll, Marians Trench, and Pacific Remote Island Area National Marine Monuments
6. Potential changes to American Samoa limited entry program,
7. Other fisheries related issues
8. Other business
9. Public comments
10. Pelagic Plan Team Recommendations

The order in which the agenda items are addressed may change. The PPT will meet as late as necessary to complete scheduled business.

Although non-emergency issues not contained in this agenda may come before the PPT for discussion, those issues may not be the subject of formal action during these meetings. Plan Team action will be restricted to those issues specifically listed in this document and any issue arising after publication of this document that requires emergency action under section 305(c) of the Magnuson-Stevens Fishery Conservation and Management Act, provided the public has been notified of the Council's intent to take final action to address the emergency.

Special Accommodations

These meetings are physically accessible to people with disabilities. Requests for sign language interpretation or other auxiliary aids should be directed to Kitty M. Simonds, (808) 522–8220 (voice) or (808) 522–8226 (fax), at least 5 days prior to the meeting date.

Authority: 16 U.S.C. 1801 *et seq.*

Dated: February 16, 2010.

William D. Chappell,

Acting Director, Office of Sustainable Fisheries, National Marine Fisheries Service.

[FR Doc. 2010–3194 Filed 2–18–10; 8:45 am]

BILLING CODE 3510–22–S

DEPARTMENT OF COMMERCE

National Oceanic and Atmospheric Administration

RIN 0648–XU45

Gulf of Mexico Fishery Management Council; Public Meeting

AGENCY: National Marine Fisheries Service (NMFS), National Oceanic and Atmospheric Administration (NOAA), Commerce.

ACTION: Notice of a public meeting.

SUMMARY: The Gulf of Mexico Fishery Management Council (Council) will convene a web based meeting of the ABC Control Rule Working Group (Group).

DATES: The webinar meeting will convene at 10 a.m. eastern time on Friday, March 5, 2010 and is expected end at 12 noon.

ADDRESSES: The webinar will be accessible via internet. Please go to the Gulf of Mexico Fishery Management Council's website at *www.gulfcouncil.org* for instructions.

Council address: Gulf of Mexico Fishery Management Council, 2203 N. Lois Avenue, Suite 1100, Tampa, FL 33607.

FOR FURTHER INFORMATION CONTACT: Steven Atran, Population Dynamics Statistician; Gulf of Mexico Fishery Management Council; telephone: (813) 348–1630.

SUPPLEMENTARY INFORMATION: The ABC Control Rule Working Group will meet to discuss and finalize a draft of the acceptable biological catch (ABC) control rule being developed. The discussion will include completion of a table of dimensions, tiers within dimensions, and points for use in developing the appropriate probability of overfishing to use for stocks that have adequate data to use the P-star approach to determining ABC. For data-poor stocks, those with inadequate data to apply the P-star approach, the Group will complete development of a decision tree of dimensions and tiers within dimensions to use in selecting an appropriate alternative approach to setting ABC that makes the best use of the available data. For each of the methods, the Group will select stocks to use as case studies in applying the method. The Group will also discuss what advice it can provide to the Council on setting a minimum stock threshold below which harvest will not be allowed.

Copies of the agenda and other related materials can be obtained by calling (813) 348–1630. Materials will also be available to download from the ABC Control Rule Working Group folder of the Council's FTP site (*http://ftp.gulfcouncil.org*, login i.d. is anonymous, leave password blank).

Although other non-emergency issues not on the agenda may come before the ABC Control Rule Working Group for discussion, in accordance with the Magnuson-Stevens Fishery Conservation and Management Act (Magnuson-Stevens Act), those issues may not be the subject of formal action during this meeting. Actions of the Working Group will be restricted to those issues specifically identified in the agenda and any issues arising after publication of this notice that require emergency action under Section 305(c) of the Magnuson-Stevens Act, provided the public has been notified of the Council's intent to take action to address the emergency.

Special Accommodations

This webinar is accessible to people with disabilities. For assistance with any of our webinars contact Tina O'Hern at the Council (see **ADDRESSES**) at least 5 working days prior to the webinar.

Dated: February 16, 2010.

William D. Chappell,

Acting Director, Office of Sustainable Fisheries, National Marine Fisheries Service.

[FR Doc. 2010–3197 Filed 2–18–10; 8:45 am]

BILLING CODE 3510–22–S

DEPARTMENT OF COMMERCE

National Oceanic and Atmospheric Administration

RIN 0648–XU46

Gulf of Mexico Fishery Management Council; Public Meetings

AGENCY: National Marine Fisheries Service (NMFS), National Oceanic and Atmospheric Administration (NOAA), Commerce.

ACTION: Notice of a public meeting.

SUMMARY: The Gulf of Mexico Fishery Management Council (Council) will convene its Law Enforcement Advisory Panel.

DATES: The meeting will convene at 1:30 p.m. on Tuesday, March 9, 2010 and conclude no later than 5 p.m.

ADDRESSES: The meeting will be held at the Perdido Beach Resort, 27200 Perdido Beach Blvd., Orange Beach, AL 36561.

Council address: Gulf of Mexico Fishery Management Council, 2203 North Lois Avenue, Suite 1100, Tampa, FL 33607.

FOR FURTHER INFORMATION CONTACT: Dr. Richard Leard, Deputy Executive Director, Gulf of Mexico Fishery Management Council; telephone: (813) 348–1630.

SUPPLEMENTARY INFORMATION: The Council will convene the Law Enforcement Advisory Panel to consider the use of catch shares as a fishery management tool and the law

enforcement implications. The Law Enforcement Advisory Panel will also review a recently completed Red Snapper Regulatory Amendment and an Options Paper for Amendment 32 to the Reef Fish Fishery Management Plan that addresses gag and red grouper. The Law Enforcement Advisory Panel will also review the current action schedule and the status of amendments and other regulatory actions. Finally, the Law Enforcement Advisory Panel will discuss the use of fish traps in federal waters.

The Law Enforcement Advisory Panel consists of principal law enforcement officers in each of the Gulf States, as well as NOAA Law Enforcement, U.S. Fish and Wildlife Service (FWS), the U.S. Coast Guard, and the NOAA General Counsel for Law Enforcement. A copy of the agenda and related materials can be obtained by calling the Council office at (813) 348–1630.

Although other non-emergency issues not on the agendas may come before the Law Enforcement Advisory Panel for discussion, in accordance with the Magnuson-Stevens Fishery Conservation and Management Act (Magnuson-Stevens Act), those issues may not be the subject of formal action during this meeting. Actions of the Law Enforcement Advisory Panel will be restricted to those issues specifically identified in the agendas and any issues arising after publication of this notice that require emergency action under Section 305(c) of the Magnuson-Stevens Act, provided the public has been notified of the Council's intent to take action to address the emergency.

Special Accommodations

These meetings are physically accessible to people with disabilities. Requests for sign language interpretation or other auxiliary aids should be directed to Tina O'Hern at the Council (see **ADDRESSES**) 5 working days prior to the meeting.

Dated: February 16, 2010.

William D. Chappell,

Acting Director, Office of Sustainable Fisheries, National Marine Fisheries Service.

[FR Doc. 2010–3209 Filed 2–18–10; 8:45 am]

BILLING CODE 3510–22–S

DEPARTMENT OF COMMERCE

National Oceanic and Atmospheric Administration

RIN 0648–XU48

Western Pacific Fishery Management Council; Public Meetings

AGENCY: National Marine Fisheries Service (NMFS), National Oceanic and Atmospheric Administration (NOAA), Commerce.

ACTION: Notice of public meetings.

SUMMARY: The Western Pacific Fishery Management Council (Council) will hold meetings of its American Samoa and Hawaii Archipelagic Fishery Ecosystem Plan (FEP) Plan Teams to discuss potential management measures for non-commercial fishing in the Rose Atoll Marine National Monument and Pacific Remote Islands Marine National Monument, respectively.

DATES: The American Samoa FEP Plan Team meeting will be held on Monday, March 8, 2010, from 2–4 p.m. HST. The Hawaii FEP Plan Team meeting will be held March 9, 2010, from 1–3 p.m. HST.

ADDRESSES: The American Samoa meeting will be held at the American Samoa Department of Marine and Wildlife Resources Building, Pago Pago, AS 96799: telephone: (684) 633–4456.

The Hawaii meeting will be held at the Council Office Conference Room, Western Pacific Fishery Management Council, 1164 Bishop St., Suite 1400, Honolulu, HI, 96813; telephone: (808) 522–8220.

FOR FURTHER INFORMATION CONTACT: Kitty M. Simonds, Executive Director; telephone: (808) 522–8220.

SUPPLEMENTARY INFORMATION: The agenda for the American Samoa FEP Plan Team meeting will focus primarily on one issue: non-commercial fishing in the Rose Atoll Marine National Monument as prescribed in Presidential Proclamation 8337 (January 6, 2009). The agenda for the Hawaii FEP Plan Team meeting will also only consider primarily one issue: non-commercial fishing in the Pacific Remote Islands Marine National Monument as prescribed in Presidential Proclamation 8336 (January 6, 2009). Interested parties who are unable to attend in person will be able to participate via teleconference using the Council's teleconferencing facility (1–888–482–3560, pass code 5228220). The plan teams will meet as late as necessary to complete scheduled business.

Although non-emergency issues not contained in this agenda may come before the plan teams for discussion, those issues may not be the subject of formal action during these meetings. Plan Team action will be limited to issues regarding non-commercial fishing in the Rose Atoll Marine National Monument and the Pacific Remote Islands Marine National Monument, respectively.

Special Accommodations

These meetings are physically accessible to people with disabilities. Requests for sign language interpretation or other auxiliary aids should be directed to Kitty M. Simonds, (808) 522–8220 (voice) or (808) 522–8226 (fax), at least 5 days prior to the meeting date.

Authority: 16 U.S.C. 1801 *et seq.*

Dated: February 16, 2010.

William D. Chappell,

Acting Director, Office of Sustainable Fisheries, National Marine Fisheries Service.

[FR Doc. 2010–3210 Filed 2–18–10; 8:45 am]

BILLING CODE 3510–22–S

DEPARTMENT OF COMMERCE

National Oceanic and Atmospheric Administration

RIN 0648–XU47

Pacific Fishery Management Council; Public Meetings

AGENCY: National Marine Fisheries Service (NMFS), National Oceanic and Atmospheric Administration (NOAA), Commerce.

ACTION: Notice of public meetings.

SUMMARY: The Pacific Fishery Management Council (Council) and its advisory entities will hold public meetings.

DATES: The Council and its advisory entities will meet March 5–11, 2010. The Pacific Council meeting will begin on Saturday, March 6, 2010 at 10 a.m., reconvening each day through Thursday, March 11, 2010. All meetings are open to the public, except a closed session will be held from 11 a.m. until 12 noon on Saturday, March 6 to address litigation and personnel matters. The Pacific Council will meet as late as necessary each day to complete its scheduled business.

ADDRESSES: The meetings will be held at the Doubletree Hotel Sacramento, 2001 Point West Way, Sacramento, CA 95815; telephone: (916) 929–8855.

Council address: Pacific Fishery Management Council, 7700 NE Ambassador Place, Suite 101, Portland, OR 97220.

FOR FURTHER INFORMATION CONTACT: Dr. Donald O. McIsaac, Executive Director; telephone: (503) 820–2280 or (866) 806–7204 toll free; or access the Pacific Council website, *http://www.pcouncil.org* for the current meeting location, proposed agenda, and meeting briefing materials.

SUPPLEMENTARY INFORMATION: The following items are on the Pacific Council agenda, but not necessarily in this order:

A. Call to Order

1. Opening Remarks and Introductions
2. Roll Call
3. Executive Director's Report
4. Approve Agenda

B. Open Comment Period

Comments on Non-Agenda Items

C. Habitat

Current Habitat Issues

D. Administrative Matters

1. National Oceanic and Atmospheric Administration Report on Activities of the Ocean Policy Task Force and Catch Shares Task Force
2. Council Comments on Proposed Revisions to National Standard 2 - Scientific Information
3. Legislative Matters
4. Approval of Council Meeting Minutes
5. Membership Appointments and Council Operating Procedures
6. Future Council Meeting Agenda and Workload Planning

E. Groundfish Management

1. National Marine Fisheries Service Report
2. Stock Assessment Planning for 2013–14 Management Measures
3. Pacific Whiting Harvest Specifications for 2010
4. Fishery Management Plan Amendment 23 - Annual Catch Limits and Accountability Measures
5. Consideration of Inseason Adjustments (Including Pacific Whiting Management Measures and Bycatch Limits)
6. Regulatory Deeming for Fishery Management Plan Amendment 20 - Trawl Rationalization and Amendment 21 - Intersector Allocation, and Planning for Community Fishery Associations
7. Informational Briefing on Environmental Impact Statement Development for the 2011–12 Management Specifications and Measures
8. Final Consideration of Inseason Adjustments (if needed)

F. Pacific Halibut Management

1. Report on the International Pacific Halibut Commission Meeting
2. Incidental Catch Regulations in the Salmon Troll and Fixed Gear Sablefish Fisheries

G. Salmon Management

1. National Marine Fisheries Service Report
2. Review of 2009 Fisheries and Summary of 2010 Stock Abundance Forecasts
3. Identification of Stocks Not Meeting Conservation Objectives
4. Identification of Management Objectives and Preliminary Definition of 2010 Salmon Management Options
5. Council Recommendations for 2010 Management Option Analysis
6. Further Council Direction for 2010 Management Options
7. Adoption of 2010 Management Options for Public Review
8. Appoint Salmon Hearings Officers

H. Coastal Pelagic Species Management

1. National Marine Fisheries Service Report
2. Fishery Management Plan Amendment 13 - Annual Catch Limits and Accountability Measures
3. Exempted Fishing Permits for 2010

SCHEDULE OF ANCILLARY MEETINGS

Friday, March 5, 2010		
Scientific and Statistical Committee	8 am	California Ballroom Salon 4.
Habitat Committee	8:30 am	Capitol Ballroom Salon A.
Groundfish Management Team	2 pm	California Ballroom Salon 2.
Saturday, March 6, 2010		
California State Delegation	7 am	California Ballroom Salon 3.
Oregon State Delegation	7 am	Terrace Room.
Washington State Delegation	7 am	Sacramento Room.
Groundfish Advisory Subpanel	8 am	California Ballroom Salon 3.
Groundfish Management Team	8 am	California Ballroom Salon 2.
Scientific and Statistical Committee	8 am	California Ballroom Salon 4.
Legislative Committee	9 am	Terrace Room.
Tribal Policy Group	As Needed	Del Paso Room.
Tribal and Washington Technical Group	As Needed	El Camino Room.
Sunday, March 7, 2010		
California State Delegation	7 am	California Ballroom Salon 3.
Oregon State Delegation	7 am	Terrace Room.
Washington State Delegation	7 am	Sacramento Room.
Groundfish Advisory Subpanel	8 am	California Ballroom Salon 3.
Groundfish Management Team	8 am	California Ballroom Salon 2.
Salmon Advisory Subpanel	8 am	Terrace Room.
Salmon Technical Team	8 am	Garden Room.
Enforcement Consultants	11 am	American River Room.
Coastal Pelagic Species Advisory Subpanel	1 pm	Capitol Ballroom Salon A.
Coastal Pelagic Species Management Team	1 pm	California Ballroom Salon 4.
Tribal Policy Group	As Needed	Del Paso Room.
Tribal and Washington Technical Group	As Needed	El Camino Room.
Monday, March 8, 2010		
California State Delegation	7 am	California Ballroom Salon 3.
Oregon State Delegation	7 am	Terrace Room.
Washington State Delegation	7 am	Sacramento Room.
Coastal Pelagic Species Advisory Subpanel	8 am	Capitol Ballroom Salon A.
Coastal Pelagic Species Management Team	8 am	California Ballroom Salon 4.
Enforcement Consultants	8 am	American River Room.
Groundfish Advisory Subpanel	8 am	California Ballroom Salon 3.
Groundfish Management Team	8 am	California Ballroom Salon 2.

SCHEDULE OF ANCILLARY MEETINGS—Continued

Salmon Advisory Subpanel	8 am	Terrace Room.
Salmon Technical Team	8 am	Garden Room.
Tribal Policy Group	As Needed	Del Paso Room.
Tribal and Washington Technical Group	As Needed	El Camino Room.
Chair's Reception	6 pm	Capitol Ballroom Salons B-C.
Tuesday, March 9, 2010		
California State Delegation	7 am	California Ballroom Salon 3.
Oregon State Delegation	7 am	Terrace Room.
Washington State Delegation	7 am	Sacramento Room.
Enforcement Consultants	8 am	American River Room.
Groundfish Advisory Subpanel	8 am	California Ballroom Salon 3.
Groundfish Management Team	8 am	California Ballroom Salon 2.
Salmon Advisory Subpanel	8 am	Terrace Room.
Salmon Technical Team	8 am	Garden Room.
Tribal Policy Group	As Needed	Del Paso Room.
Tribal and Washington Technical Group	As Needed	El Camino Room.
Wednesday, March 10, 2010		
California State Delegation	7 am	California Ballroom Salon 3.
Oregon State Delegation	7 am	Terrace Room.
Washington State Delegation	7 am	Sacramento Room.
Groundfish Advisory Subpanel	8 am	California Ballroom Salon 3.
Groundfish Management Team	8 am	California Ballroom Salon 2.
Salmon Advisory Subpanel	8 am	Terrace Room.
Salmon Technical Team	8 am	Garden Room.
Enforcement Consultants	As Needed	American River Room.
Tribal Policy Group	As Needed	Del Paso Room.
Tribal and Washington Technical Group	As Needed	El Camino Room.
Thursday, March 11, 2010		
California State Delegation	7 am	California Ballroom Salon 3.
Oregon State Delegation	7 am	Terrace Room.
Washington State Delegation	7 am	Sacramento Room.
Salmon Advisory Subpanel	8 am	Terrace Room.
Salmon Technical Team	8 am	Garden Room.
Enforcement Consultants	As Needed	American River Room.
Tribal Policy Group	As Needed	Del Paso Room.
Tribal and Washington Technical Group	As Needed	El Camino Room.

Although non-emergency issues not contained in this agenda may come before this Council for discussion, those issues may not be the subject of formal Council action during this meeting. Council action will be restricted to those issues specifically listed in this notice and any issues arising after publication of this notice that require emergency action under Section 305(c) of the Magnuson-Stevens Fishery Conservation and Management Act, provided the public has been notified of the Council's intent to take final action to address the emergency.

Special Accommodations

These meetings are physically accessible to people with disabilities. Requests for sign language interpretation or other auxiliary aids should be directed to Ms. Carolyn Porter at (503) 820–2280 at least 5 days prior to the meeting date.

Dated: February 16, 2010.

William D. Chappell,

Acting Director, Office of Sustainable Fisheries, National Marine Fisheries Service.

[FR Doc. 2010–3198 Filed 2–18–10; 8:45 am]

BILLING CODE 3510–22–S

DEPARTMENT OF COMMERCE

International Trade Administration

[A–560–823, A–570–958]

Certain Coated Paper Suitable for High-Quality Print Graphics Using Sheet-Fed Presses From Indonesia and the People's Republic of China: Postponement of Preliminary Determinations of Antidumping Duty Investigations

AGENCY: Import Administration, International Trade Administration, Department of Commerce.

DATES: *Effective Date:* February 19, 2010.

FOR FURTHER INFORMATION CONTACT: Gemal Brangman (Indonesia) or Demitrios Kalogeropoulos (the People's Republic of China), AD/CVD Operations, Offices 2 and 8, Import Administration, International Trade Administration, U.S. Department of Commerce, 14th Street and Constitution Avenue, NW., Washington, DC 20230; telephone: (202) 482–3773 or (202) 482–2623, respectively.

SUPPLEMENTARY INFORMATION:

Postponement of Preliminary Determinations

On October 13, 2009, the Department of Commerce ("Department") initiated the antidumping investigations of certain coated paper suitable for high-quality print graphics using sheet-fed presses from Indonesia and the People's Republic of China. *See Certain Coated Paper Suitable for High-Quality Print Graphics Using Sheet-Fed Presses From Indonesia and the People's Republic of China: Initiation of Antidumping Duty Investigations,* 74 FR 53710 (October 20, 2009).

The notice of initiation stated that unless postponed the Department would issue the preliminary determinations for these investigations no later than 140 days after the date of initiation, in accordance with section 733(b)(1)(A) of the Tariff Act of 1930, as amended ("the Act"). The preliminary determinations are currently due no later than March 2, 2010.

On January 22, 2010, the petitioners, Appleton Coated LLC, NewPage Corporation S.D. Warren Company d/b/a Sappi Fine Paper North America, and United Steel, Paper and Forestry, Rubber, Manufacturing, Energy, Allied

Industrial and Service Workers International Union, made a timely request pursuant to section 733(c)(1)(A) of the Act and 19 CFR 351.205(e) for a 50-day postponement of the preliminary determinations. The petitioners requested postponement of the preliminary determinations in order to ensure that the Department has ample time to thoroughly analyze the complex issues involved in these investigations.

Because there are no compelling reasons to deny the request, the Department is postponing the deadline for the preliminary determinations pursuant to section 733(c)(1)(A) of the Act to April 21, 2010, 190 days from the date of initiation. The deadline for the final determinations will continue to be 75 days after the date of the preliminary determinations, unless postponed.

This notice is issued and published pursuant to sections 733(c)(2) of the Act and 19 CFR 351.205(f)(1).

Dated: February 4, 2010.

Ronald K. Lorentzen,

Deputy Assistant Secretary for Import Administration.

[FR Doc. 2010–3268 Filed 2–18–10; 8:45 am]

BILLING CODE 3510–DS–P

DEPARTMENT OF COMMERCE

National Oceanic and Atmospheric Administration

[Docket No. 100204077–0077–01]

RIN 0648–ZC15

Species Recovery Grants to Tribes Program

AGENCY: Fisheries Protected Resources Program Office (PRPO), National Marine Fisheries Service (NMFS), National Oceanic and Atmospheric Administration (NOAA), Commerce.

ACTION: Notice of funding availability.

SUMMARY: The National Marine Fisheries Service publishes this notice to solicit proposals for the Species Recovery Grants to Tribes Program. The principal objective of the Program is to support recovery efforts that directly benefit threatened or endangered species, recently de-listed species, or candidate species. Recovery efforts may involve management, research, monitoring, and outreach activities or any combination thereof. For FY 2010, NOAA anticipates that approximately $1 million will be available for distribution under this program. Only federally recognized tribes are eligible to apply under this solicitation.

DATES: Applications must be postmarked, provided to a delivery service, or received by *www.grants.gov* by 11:59 p.m. Eastern Standard Time [*April 5, 2010*]. Use of a delivery service other than U.S. mail must be documented with a receipt. Please Note: It may take *Grants.gov* up to two business days to validate or reject an application.

ADDRESSES: The Federal funding announcement and application instructions for this grant program are available via the Grants.gov website at *http://www.grants.gov*. Applicants without internet access can obtain application instructions from Lisa Manning, NOAA/NMFS/Office of Protected Resources, 1315 East-West Highway, Silver Spring MD 20912, (phone) 301–713–1401, (email) *Lisa.Manning@noaa.gov*.

FOR FURTHER INFORMATION CONTACT: If you have any questions regarding this proposal solicitation, please contact Lisa Manning or Sean Ledwin at the NOAA/NMFS/Office of Protected Resources, Endangered Species Division, 1315 East-West Highway, Silver Spring, MD 20910, by phone at 301–713–1401, or by email (*Lisa.Manning@noaa.gov* or *Sean.Ledwin@noaa.gov*). You may also contact one of the following people in your region for further guidance: Jessica Pruden, Northeast Regional Office (*Jessica.Pruden@noaa.gov*, 978–282–8482); Karla Reece, Southeast Regional Office (*Karla.Reece@noaa.gov*, 727–824–5348); Eric Murray, Northwest Regional Office (*Eric.Murray@noaa.gov*, 503–231–2378); Susan Wang, Southwest Regional Office (*Susan.Wang@noaa.gov*, 562–980–4199); Barbara Mahoney, Alaska Regional Office (*Barbara.Mahoney@noaa.gov*, 907–271–3448).

SUPPLEMENTARY INFORMATION: Success in recovering protected species under National Marine Fisheries Service's (NMFS) jurisdiction depends in large part on working cooperatively with other management partners, including tribes. NMFS recognizes the importance of many of these protected species to tribes and ongoing efforts by tribal nations to conserve and protect these species. NMFS is authorized under 16 U.S.C. 661 *et seq.* to provide Federal assistance to federally recognized tribes to support conservation programs for marine and anadromous species under its jurisdiction. This assistance, provided in the form of grants, can be used to support conservation of endangered, threatened, and candidate or proposed species, as well as post-delisting monitoring of recovered species.

Through this notice, NMFS announces the solicitation of proposals to support conservation programs for marine and anadromous species under its jurisdiction. Funded activities may include development and implementation of management plans, scientific research, and public education and outreach. Proposals should address priority actions identified in an Endangered Species Act (ESA) Recovery Plan where applicable.

Successful applications will be those that demonstrate a direct conservation benefit to the species or its habitat. Proposals involving management activities should demonstrate a high probability of contributing to recovery of the species, especially through mitigation of existing threats or factors inhibiting recovery of the species. Proposals involving scientific research should demonstrate a high probability of providing information that can be used to recover, manage, or improve current management strategies for a given species. Proposals involving public education and outreach projects should demonstrate a high probability of improving or increasing public understanding and participation in conservation activities.

Projects focusing on listed Pacific salmon or steelhead will not be considered under this grant program; conservation efforts for these species may be supported through the Pacific Coastal Salmon Recovery Fund.

The full text of the Federal funding opportunity announcement for this program can be accessed via the Grants.gov web site at *http://www.grants.gov*. The announcement will also be available by contacting the program officials identified under **FOR FURTHER INFORMATION CONTACT**. Applications must comply with all requirements contained in the Federal funding opportunity announcement.

Statutory Authority

16 U.S.C. 661 *et seq.*

CFDA

11.472, Unallied Science Program

Funding Availability

NOAA anticipates that approximately $1 million will be available for distribution under this program in FY 2010. Awards are expected to range between $100,000 and $500,000 in federal funding per year, but proposals requesting less than $100,000 will still be considered. The exact amount of funds that may be awarded will be determined during pre-award negotiations between the applicant and NOAA representatives. Publication of

this notice does not oblige NOAA to award any specific grant proposal or to obligate any available funds.

There is no limit on the number of applications that can be submitted by the same Principal Investigator or tribe. Multiple applications submitted by the same applicant must, however, clearly identify distinct projects.

If an application for a financial assistance award is selected for funding, NOAA has no obligation to provide any additional funding in connection with that award in subsequent years. Notwithstanding verbal or written assurance that may have been received, pre-award costs are not allowed under the award unless approved by the Grants Officer in accordance with 2 CFR Part 225.

Eligibility

Eligible applicants are federally recognized tribes as defined under the Federally Recognized Indian Tribe List Act (Public Law 103–454) or Presidential Executive Order. Tribes may apply for funding to conduct work on federally listed species (except Pacific salmon and steelhead), recently de-listed species, and any species that has become a candidate or a proposed species by the grant application deadline. Eligible species are those under NMFS or joint NMFS-U.S. Fish and Wildlife Service jurisdiction. Current lists of candidate, proposed, and de-listed species are available at *http://www.nmfs.noaa.gov/pr/species/esa/other.htm*; and a current list of threatened and endangered species is available at *http://www.nmfs.noaa.gov/pr/pdfs/species/esa__table.pdf*.

Federal agencies or institutions are not eligible to receive Federal assistance under this notice. In addition, NOAA and NMFS employees shall not provide assistance in writing applications, write letters of support for any application, or otherwise confer any unfair advantage on a particular application. However, for activities involving collaboration with current NMFS programs, NMFS employees can write a letter verifying that they are collaborating with the project.

Evaluation and Selection Procedures

The general evaluation criteria and selection factors are summarized below. Further information about the evaluation criteria and selection factors can be found in the full funding opportunity announcement.

Evaluation Criteria for Projects

Proposals will be evaluated based on the following criteria (with their relative weights):(1) Importance/relevance and applicability of the proposal to the program goals (35 percent); (2) technical/ scientific merit (30 percent); (3) overall qualifications of the applicants (10 percent); (4) project costs (15 percent); and (5) outreach and education (10 percent). Detailed descriptions of these criteria are provided in the Federal funding opportunity announcement.

Review and Selection Process

Screening, review, and selection procedures will take place in three steps: initial evaluation, merit review, and final selection by the Selecting Official (i.e., the Assistant Administrator for NMFS). Initial screening and evaluation of applications will be conducted to ensure that application packages have all required forms and application elements, and meet all of the eligibility criteria.

Applications meeting the requirements of this solicitation will then undergo merit review. Each application will be reviewed by a minimum of three reviewers, who will independently evaluate and score proposals using the evaluation criteria. Consensus advice will not be provided by the merit reviewers. Merit reviewers will be individuals with appropriate subject-matter expertise and may be from federal or state agencies, academic institutions, or non-profit organizations. The reviewers' ratings will be used to produce a rank order of the proposals.

After applications have undergone merit review, the Selecting Official will make the final decision regarding which applications will be funded based upon the numerical rankings and evaluations of the applications by the merit reviewers as well as the selection factors set forth in the Federal funding opportunity announcement and summarized below.

Selection Factors for Projects

The merit review ratings shall provide a rank order to the Selecting Official for final recommendation to the NOAA Grants Officer. The Selecting Official shall award in the rank order of the review ratings unless the proposal is justified to be selected out of rank order based upon the following factors, where applicable:

a. Availability of funding;

b. Balance/distribution of funds;

i. Geographically;

ii. By type of institutions;

iii. By type of partners;

iv. By research areas;

v. By project types;

c. Whether this project duplicates other projects funded or considered for funding by NOAA or other Federal agencies;

d. Program priorities and policy factors as set out in the Program Objectives, Program Priorities, and Funding Availability sections of the Federal funding opportunity announcement;

e. Applicant's prior award performance;

f. Partnerships with and/or participation of targeted groups;

g. Adequacy of information necessary for NOAA staff to make a NEPA determination and draft necessary documentation before recommendations for funding are made to the Grants Officer.

Intergovernmental Review

Applications under this program are not subject to Executive Order 12372, "Intergovernmental Review of Federal Programs."

Limitation of Liability

In no event will NOAA or the Department of Commerce be responsible for proposal preparation costs if these programs fail to receive funding or are cancelled because of other agency priorities. Publication of this announcement does not oblige NOAA to award any specific project or to obligate any available funds.

National Environmental Policy Act (NEPA)

NOAA must analyze the potential environmental impacts, as required by the National Environmental Policy Act (NEPA), for applicant projects or proposals that are seeking NOAA federal funding opportunities. Detailed information on NOAA compliance with NEPA can be found at the following NOAA NEPA website: *http://www.nepa.noaa.gov/*, including our NOAA Administrative Order 216–6 for NEPA, *http://www.nepa.noaa.gov/NAO216__6.pdf*, and the Council on Environmental Quality implementation regulations, *http://ceq.hss.doe.gov/nepa/regs/ceq/toc__ceq.htm*. Consequently, as part of an applicant's package, and under their description of their program activities, applicants are required to provide detailed information on the activities to be conducted, locations, sites, species and habitat to be affected, possible construction activities, and any environmental concerns that may exist (e.g., the use and disposal of hazardous or toxic chemicals, introduction of non-indigenous species, impacts to endangered and threatened species, aquaculture projects, and impacts to coral reef systems). In addition to

providing specific information that will serve as the basis for any required impact analyses, applicants will also be required to cooperate with NOAA in identifying feasible measures to reduce or avoid any identified adverse environmental impacts of their proposed project. The failure to do so shall be grounds for not selecting an application. In some cases if additional information is required after an application is selected, funds can be withheld by the Grants Officer under a special award condition requiring the recipient to submit additional environmental compliance information sufficient to enable NOAA to make an assessment on any impacts that a project may have on the environment.

Department of Commerce Pre-Award Notification Requirements

The Department of Commerce Pre-Award Notification Requirements for Grants and Cooperative Agreements contained in the **Federal Register** on February 11, 2008 (73 FR 7696), are applicable to this solicitation.

Paperwork Reduction Act

This document contains collection-of-information requirements subject to the Paperwork Reduction Act (PRA). The use of Standard Forms 424, 424A, 424B, and SF LLL and CD 346 has been approved by the Office of Management and Budget (OMB) under the respective control numbers 0648–0043, 0648–0044, 0648–0040, and 0648–0046.

Notwithstanding any other provision of law, no person is required to, nor shall a person be subject to a penalty for failure to comply with, a collection of information subject to the requirements of the PRA unless that collection of information displays a currently valid OMB control number.

Executive Order 12866

This notice has been determined to be not significant for purposes of Executive Order 12866.

Executive Order 13132 (Federalism)

It has been determined that this notice does not contain policies with Federalism implications as that term is defined in Executive Order 13132.

Administrative Procedure Act and Regulatory Flexibility Act

Prior notice and an opportunity for public comment are not required by the Administrative Procedure Act or any other law for rules concerning public property, loans, grants, benefits, and contracts (5 U.S.C. 553(a)(2)). Because notice and opportunity for comment are not required pursuant to 5 U.S.C. 553 or any other law, the analytical requirements for the Regulatory Flexibility Act (5 U.S.C. 601 *et seq.*) are inapplicable. Therefore, a regulatory flexibility analysis has not been prepared.

Dated: February 12, 2010.

John Oliver,

Deputy Assistant Administrator for Operations, National Marine Fisheries Service.

[FR Doc. 2010–3276 Filed 2–18–10; 8:45 am]

BILLING CODE 3510–22–S

COMMITTEE FOR PURCHASE FROM PEOPLE WHO ARE BLIND OR SEVERELY DISABLED

Procurement List: Proposed Addition and Deletion

AGENCY: Committee for Purchase From People Who Are Blind or Severely Disabled.

ACTION: Proposed addition to and deletion from Procurement List.

SUMMARY: The Committee is proposing to add to the Procurement List a service to be furnished by a nonprofit agency employing persons who are blind or have other severe disabilities, and to delete a service previously furnished by such agency.

Comments Must Be Received on or Before: March 22, 2010.

ADDRESSES: Committee for Purchase From People Who Are Blind or Severely Disabled, Jefferson Plaza 2, Suite 10800, 1421 Jefferson Davis Highway, Arlington, Virginia 22202–3259.

For Further Information or to Submit Comments Contact: Barry S. Lineback, Telephone: (703) 603–7740, Fax: (703) 603–0655, or e-mail *CMTEFedReg@AbilityOne.gov.*

SUPPLEMENTARY INFORMATION: This notice is published pursuant to 41 U.S.C 47(a)(2) and 41 CFR 51–2.3. Its purpose is to provide interested persons an opportunity to submit comments on the proposed actions.

Addition

If the Committee approves the proposed addition, the entity of the Federal Government identified in this notice will be required to furnish the service listed below from a nonprofit agency employing persons who are blind or have other severe disabilities.

Regulatory Flexibility Act Certification

I certify that the following action will not have a significant impact on a substantial number of small entities. The major factors considered for this certification were:

1. If approved, the action will not result in any additional reporting, recordkeeping or other compliance requirements for small entities other than the small organization that will furnish the service to the Government.

2. If approved, the action will result in authorizing small entities to furnish the service to the Government.

3. There are no known regulatory alternatives which would accomplish the objectives of the Javits-Wagner-O'Day Act (41 U.S.C. 46–48c) in connection with the service proposed for addition to the Procurement List.

Comments on this certification are invited. Commenters should identify the statement(s) underlying the certification on which they are providing additional information.

End of Certification

The following service is proposed for addition to the Procurement List and is provided by the nonprofit agency listed:

Service

Service Type/Location: Document Management Services, Evans Army Community Hospital—Fort Carson, 1650 Cochrane Circle, Fort Carson, CO.

NPA: Goodwill Industrial Services Corporation, Colorado Springs, CO.

Contracting Activity: DEPT OF THE ARMY, XR W6BA ACA, FT CARSON, COLORADO.

Deletion

Regulatory Flexibility Act Certification

I certify that the following action will not have a significant impact on a substantial number of small entities. The major factors considered for this certification were:

1. If approved, the action will not result in additional reporting, recordkeeping or other compliance requirements for small entities.

2. If approved, the action may result in authorizing small entities to furnish the service to the Government.

3. There are no known regulatory alternatives which would accomplish the objectives of the Javits-Wagner-O'Day Act (41 U.S.C. 46–48c) in connection with the service proposed for deletion from the Procurement List.

End of Certification

The following service is proposed for deletion from the Procurement List:

Service

Service Type/Location: Janitorial/Custodial, Florida Air National Guard: Buildings 874 and 877, 14300 Fang Drive, Homestead ARB, FL.

NPA: Goodwill Industries of South Florida, Inc., Miami, FL.

Contracting Activity: Dept of the Army, XRA W7M2 USPFO Activity FL ARNG, ST Augustine, FL.

Barry S. Lineback,

Director, Business Operations.

[FR Doc. 2010–3259 Filed 2–18–10; 8:45 am]

BILLING CODE 6353–01–P

COMMITTEE FOR PURCHASE FROM PEOPLE WHO ARE BLIND OR SEVERELY DISABLED

Procurement List Additions and Deletions

AGENCY: Committee for Purchase From People Who Are Blind or Severely Disabled.

ACTION: Additions to the Procurement List.

SUMMARY: This action adds to the Procurement List products and services to be furnished by nonprofit agencies employing persons who are blind or have other severe disabilities.

DATES: *Effective Date:* March 22, 2010.

ADDRESSES: Committee for Purchase From People Who Are Blind or Severely Disabled, Jefferson Plaza 2, Suite 10800, 1421 Jefferson Davis Highway, Arlington, Virginia 22202–3259.

FOR FURTHER INFORMATION CONTACT: Barry S. Lineback, Telephone: (703) 603–7740, Fax: (703) 603–0655, or e-mail *CMTEFedReg@AbilityOne.gov.*

SUPPLEMENTARY INFORMATION:

Additions

On 12/18/2009 (74 FR 67176–67177), the Committee for Purchase From People Who Are Blind or Severely Disabled published notice of proposed additions to the Procurement List.

Comments were received from the incumbent contractor indicating that adding Warehouse—Receiving & Distribution Services to the Procurement List would result in negative economic and business impact to its company. The contractor also commented that it has worked in partnership with the government for over nine years to provide consistently excellent service, innovation and best value. Finally, the contractor questioned the qualifications and capabilities of persons with certain disabilities to perform some of the functions of this service.

The Committee for Purchase From People Who Are Blind or Severely Disabled (Committee) operates pursuant to statutory and regulatory requirements. Committee decisions on what items are suitable for addition to the Procurement List are specifically guided by regulations in 41 CFR Chapter 51. The Committee regulation states that for a commodity or service to be suitable for addition to the Procurement List each of the following criteria must be satisfied: Employment potential; nonprofit agency qualifications, capability, and level of impact on the current contractor for the commodity or service.

The Committee, as an independent federal agency, is responsible for implementing the Javits-Wagner-O'Day Act. In accordance with the Act and the Code of Federal Regulations, the Committee determines which products and services produced and/or provided by nonprofit agencies employing people who are blind or with other severe disabilities are suitable for procurement by the government. The members independently consider and appropriately decide whether each product or service meets its established criteria for addition to the Procurement List. While the incumbent contractor has stated that this addition would result in adverse impact to his company, the evaluation by the Committee had determined that it would not result in severe adverse financial impact. The Committee has also determined that the nonprofit agency—and its employees—is capable and qualified to provide the service to the government. Therefore, in this situation, all four criteria have been evaluated by the Committee and the service has been determined to be suitable for addition to the Procurement List.

The Committee appreciates the struggle of small business at the local level to maintain training and employment opportunities. However, the obligation of the Committee is to focus on increasing opportunities for nonprofit agencies employing people who are blind or with other severe disabilities.

After consideration of the material presented to it concerning capability of qualified nonprofit agencies to provide the products and services and impact of the additions on the current or most recent contractors, the Committee has determined that the products and services listed below are suitable for procurement by the Federal Government under 41 U.S.C. 46–48c and 41 CFR 51–2.4.

Regulatory Flexibility Act Certification

I certify that the following action will not have a significant impact on a substantial number of small entities. The major factors considered for this certification were:

1. The action will not result in any additional reporting, recordkeeping or other compliance requirements for small entities other than the small organizations that will furnish the products and services to the Government.

2. The action will result in authorizing small entities to furnish the products and services to the Government.

3. There are no known regulatory alternatives which would accomplish the objectives of the Javits-Wagner-O'Day Act (41 U.S.C. 46–48c) in connection with the products and services proposed for addition to the Procurement List.

End of Certification

Accordingly, the following products and services are added to the Procurement List:

Products

NSN: 8415–00–NSH–1746—Armored Survival Vest Ensemble, Small.
NSN: 8465–00–NSH–2008—Set of Pockets (Armored Survival Vest).
NSN: 8465–00–NSH–2007—HABD/SEA Pocket, Armored Survival Vest.
NSN: 8465–00–NSH–2006—Radio Pocket, Armored Survival Vest.
NSN: 8465–00–NSH–2005—General Pocket, Armored Survival Vest.
NSN: 8415–00–NSH–1783—Armored Survival Vest, Extra Large.
NSN: 8415–00–NSH–1782—Armored Survival Vest, Large.
NSN: 8415–00–NSH–1781—Armored Survival Vest, Medium.
NSN: 8415–00–NSH–1780—Armored Survival Vest, Small.
NSN: 8415–00–NSH–1749—Armored Survival Vest Ensemble, Extra Large.
NSN: 8415–00–NSH–1748—Armored Survival Vest Ensemble, Large.
NSN: 8415–00–NSH–1747—Armored Survival Vest Ensemble, Medium.
NPA: Peckham Vocational Industries, Inc., Lansing, MI.
Contracting Activity: Dept of the Navy, Naval Air Systems Command Headquarters, Patuxent River, MD.
Coverage: C–List for the requirements of the Department of the Navy, Naval Air Systems Command, Patuxent River, MD.

Services

Service Type/Location: Custodial/Building Maintenance/Groundskeeping, San Angelo Air and Marine Unit, 8092 Hangar Road, San Angelo, TX.
NPA: Mavagi Enterprises, Inc., San Antonio, TX.
Contracting Activity: Bureau of Customs and Border Protection, Department of Homeland Security, Office of Procurement, Washington, DC.

Service Type/Location: Consolidated Facilities Maintenance (CFM)
Naval Medical Center Portsmouth, 620 John Paul Jones Circle, Portsmouth, VA.
Boone Clinic, Naval Amphibious Base Little Creek, 1035 Nider Blvd., Norfolk, VA.

Yorktown Clinic, Naval Weapons Station, Naval Weapons Station, Yorktown, VA.
Dam Neck Clinic, Fleet Combat Training Center Atlantic, 1885 Terrier Avenue, Virginia Beach, VA.
Oceana Clinic, Naval Air Station Oceana, 1550 Tomcat Blvd., Suite 150, Virginia Beach, VA.
Sewells Point Clinic, Naval Station Norfolk, Norfolk, VA.
NNSY Clinic, Norfolk Naval Shipyard, Portsmouth, VA.
NPA: Professional Contract Services, Inc., Austin, TX.
Contracting Activity: Dept of the Navy, Naval FAC Engineering CMD MID LANT, Norfolk, VA.
Service Type/Location: Warehouse—Receiving & Distribution Services
Chamblee, 4770 Buford Highway, Chamblee, GA.
Roybal Campus, 1600 Clifton Road, Atlanta, GA.
Peachtree Distribution Center, 3719 N. Peachtree Road, Chamblee, GA.
NPA: Goodwill Industries of North Georgia, Inc., Atlanta, GA.
Contracting Activity: Centers For Disease Control & Prevention (CDC), Procurement Grants Office (PGO), Atlanta, GA.

Barry S. Lineback,

Director, Business Operations.

[FR Doc. 2010–3260 Filed 2–18–10; 8:45 am]

BILLING CODE 6353–01–P

DEPARTMENT OF DEFENSE

Department of the Army; Corps of Engineers

Notice of Availability for a Draft General Conformity Determination for the Pacific L.A. Marine Terminal LLC Crude Oil Terminal Project, Port of Los Angeles, Los Angeles County, CA

AGENCY: Department of the Army—U.S. Army Corps of Engineers, DoD.

ACTION: Notice of availability.

SUMMARY: In November 2008, the Los Angeles Harbor Department (LAHD) and the U.S. Army Corps of Engineers, Los Angeles District, Regulatory Division (Corps) published a joint Final Supplemental Environmental Impact Statement and Subsequent Environmental Impact Report (SEIS/SEIR) for the development of a marine oil terminal at Berth 408 on Pier 400 in the Port of Los Angeles, Los Angeles County, California (Project). The Corps is currently processing a permit application submitted by the LAHD to undertake various activities and construct structures in and over navigable waters of the U.S. associated with the Project. Issuance of a Corps permit is a Federal action, which must comply with the air quality general conformity requirements specified in Section 176(c) of the Clean Air Act.

The general conformity regulations (40 CFR part 93, subpart B) allow general conformity determinations to be included in an EIS, but inclusion of these determinations is not required and can be separately noticed as it is in this case. The draft general conformity determination for the Federal action associated with the Project is available for public review during the next 30 days at the Los Angeles Harbor Department, 425 South Palos Verdes Street, San Pedro, California, on the Port's Web site: *http://www.portoflosangeles.org*, and on the Corps' Web site: *http://www.spl.usace.army.mil/regulatory/POLA.htm* (scroll down to the links under Pier 400 Crude Oil Marine Terminal). In addition, it is available at the following libraries: L.A. Public Library, Central Branch, 630 West 5th Street, Los Angeles California; L.A. Public Library, San Pedro Branch, 921 South Gaffey Street, San Pedro, California; and L.A. Public Library, Wilmington Branch, 1300 North Avalon, Wilmington, California.

Any comments received by the Corps on the draft general conformity determination during the next 30 days will be considered fully before the Corps makes a final general conformity determination and finalizes the Record of Decision (ROD) for the Federal action associated with the Project. The Corps will publish a notice of a final general conformity determination in the **Federal Register** within 30 days of rendering a final decision. The public can request from the Corps copies of the ROD, which includes responses to comments on the Final SEIS and draft general conformity determination, following publication of a final general conformity determination and upon execution of the ROD.

FOR FURTHER INFORMATION CONTACT: Questions or comments concerning the draft general conformity determination should be directed within the next 30 days to Dr. Spencer D. MacNeil, Senior Project Manager, North Coast Branch, Regulatory Division, U.S. Army Corps of Engineers, 2151 Alessandro Drive, Suite 110, Ventura, California 93001, (805) 585–2152.

SUPPLEMENTARY INFORMATION: None.

David J. Castanon,

Chief, Regulatory Division, Los Angeles District.

[FR Doc. 2010–3261 Filed 2–18–10; 8:45 am]

BILLING CODE 3710–KF–P

DEPARTMENT OF DEFENSE

Department of the Army, Corps of Engineers

Intent To Prepare a Draft Environmental Impact Statement (DEIS) for the State of Alaska's Proposed Alaska Stand Alone Pipeline (ASAP) Natural Gas Transportation Pipeline

AGENCY: U.S. Army Corps of Engineers, DoD.

ACTION: Notice of Intent; Extension of scoping period.

SUMMARY: In December 4, 2009, issue of the **Federal Register** (74 FR 63736), the Alaska District, U.S. Army Corps of Engineers (Corps), published a Notice of Intent to prepare a Draft Environmental Impact Statement (DEIS) to identify and analyze the potential impacts associated with the construction of the proposed Alaska Stand Alone Pipeline (ASAP) natural gas transportation pipeline. In that notice, the Alaska District stated that the scoping period would end on February 5, 2010. In response to several requests, the Alaska District has decided to extend the scoping period to March 8, 2010.

FOR FURTHER INFORMATION CONTACT: Questions about the proposed action and the DEIS can be answered by: Ms. Serena Sweet, Regulatory Division, telephone: (907) 753–2819, toll free in AK: (800) 478–2712, fax: (907) 753–5567, e-mail: *serena.e.sweet@usace.army.mil,* or mail: U.S. Army Corps of Engineers, CEPOA–RD, Post Office Box 6898, Elmendorf AFB, Alaska 99506–0898. Additional information may be obtained at *http://www.asapeis.com.*

SUPPLEMENTARY INFORMATION: None.

Date: February 4, 2010.
Approved by:

Serena E. Sweet,

Project Manager, Alaska District, U.S. Army Corps of Engineers.

[FR Doc. 2010–3263 Filed 2–18–10; 8:45 am]

BILLING CODE 3720–58–P

DEPARTMENT OF DEFENSE

Department of the Navy

Notice of Partially Closed Meeting of the Chief of Naval Operations (CNO) Executive Panel

AGENCY: Department of the Navy, DoD.

ACTION: Notice.

SUMMARY: The CNO Executive Panel will report on the findings and

recommendations to the Chief of Naval Operations of the Subcommittee on Naval Unmanned Aerial Vehicle Systems. The matters to be discussed during the meeting have been divided into unclassified topics and classified/business sensitive topics.

Unclassified topics will be presented from 12 p.m. until 1 p.m. on March 11, 2010, during the open portion of the meeting. The topics to be presented during the open portion of the meeting include: Navy UAS policy and Navy UAS Manning.

Classified topics will be presented from 1:15 p.m. until 3 p.m. on March 11, 2010, during the closed portion of the meeting. The topics to be presented during the closed potion of the meeting include: Navy UAS Operations, USMC UAS Operations, Multi-Mission Maritime Aircraft Force Structure, Surface Surveillance Capabilities, Tilt-Rotor capabilities. Five of the six topics to be presented during the closed portion of the meeting are classified SECRET and SECRET//NOFORN respectively, and one topic is considered business sensitive, making these topics exempt from open meeting disclosure pursuant to Title 5 United States Code (USC) Section 552b(c).

DATES: The meeting will be held on March 11, 2010.

ADDRESSES: The meeting will be held at CNA, 4825 Mark Center Drive, Alexandria, VA 22311–1846, in the Boardroom.

FOR FURTHER INFORMATION CONTACT: CDR Michael Hart, CNO Executive Panel, 4825 Mark Center Drive, Alexandria, VA 22311–1846, 703–681–6207.

SUPPLEMENTARY INFORMATION: Pursuant to the provisions of the Federal Advisory Committee Act, as amended (5 USC App.), matters that constitute classified information that have been properly classified pursuant to such Executive Order are specifically authorized to be kept secret in the interest of national defense. In addition, matters determined to be business sensitive (trade secrets and privileged commercial and financial information) are exempt from an open meeting discussion. Accordingly, the Secretary of the Navy has determined in writing that the public interest requires that the sessions of this meeting from 1:15 p.m. until 3 p.m. be closed to the public because they deal with matters that are governed by sections 552b(c)(1) and 552b(c)(4) of Title 5, USC. The sessions from 12 p.m. until 1 p.m., which are unclassified, will be open to the public.

Individuals or interested groups may submit written statements for consideration by the CNO Executive Panel at any time or in response to the agenda of a scheduled meeting. All requests must be submitted to the Designated Federal Officer at the address detailed below. If the written statement is in response to the agenda mentioned in this meeting notice, then the statement, if it is to be considered by the Panel for this meeting, must be received at least five days prior to the meeting. The Designated Federal Officer will review all timely submissions with the CNO Executive Panel Chairperson, and ensure they are provided to members of the CNO Executive Panel before this meeting. Requests or statements will not be allowed or considered during the meeting.

To contact the Designated Federal Officer, write to Executive Director, CNO Executive Panel (N00K), 4825 Mark Center Drive, 2nd Floor, Alexandria, VA 22311–1846.

Dated: February 12, 2010.

A. M. Vallandingam,

Lieutenant Commander, Office of the Judge Advocate General, U.S. Navy, Federal Register Liaison Officer.

[FR Doc. 2010–3212 Filed 2–18–10; 8:45 am]

BILLING CODE 3810–FF–P

DEPARTMENT OF DEFENSE

Department of the Navy

Notice of Partially Closed Meeting of the U.S. Naval Academy Board of Visitors

AGENCY: Department of the Navy, DoD.

ACTION: Notice.

SUMMARY: The U.S. Naval Academy Board of Visitors will meet to make such inquiry, as the Board shall deem necessary into the state of morale and discipline, the curriculum, instruction, physical equipment, fiscal affairs, and academic methods of the Naval Academy. The executive session of this meeting from 11 a.m. to 12 p.m. on March 8, 2010, will include discussions of disciplinary matters, law enforcement investigations into allegations of criminal activity, and personnel-related issues at the Naval Academy, the disclosure of which would constitute a clearly unwarranted invasion of personal privacy. For this reason, the executive session of this meeting will be closed to the public.

DATES: The open sessions of the meeting will be held on Monday, March 8, 2010, from 8 a.m. to 11 a.m. The closed session of this meeting will be the executive session held from 11 a.m. to 12 p.m.

ADDRESSES: The meeting will be held in the Bo Coppedge Room of Alumni Hall, U.S. Naval Academy, Annapolis, MD. The meeting will be handicap accessible.

FOR FURTHER INFORMATION CONTACT: Lieutenant Commander David S. Forman, USN, Executive Secretary to the Board of Visitors, Office of the Superintendent, U.S. Naval Academy, Annapolis, MD 21402–5000, 410–293–1503.

SUPPLEMENTARY INFORMATION: This notice of meeting is provided per the Federal Advisory Committee Act, as amended (5 U.S.C. App.). The executive session of the meeting from 11 a.m. to 12 p.m. on March 8, 2010, will consist of discussions of law enforcement investigations into allegations of criminal activity, new and pending administrative/minor disciplinary infractions and nonjudicial punishments involving the Midshipmen attending the Naval Academy to include but not limited to individual honor/conduct violations within the Brigade, and personnel-related issues. The discussion of such information cannot be adequately segregated from other topics, which precludes opening the executive session of this meeting to the public. Accordingly, the Secretary of the Navy has determined in writing that the meeting shall be partially closed to the public because the discussions during the executive session from 11 a.m. to 12 p.m. will be concerned with matters coming under sections 552b(c)(5), (6), and (7) of title 5, United States Code.

Dated: February 12, 2010.

A.M. Vallandingam,

Lieutenant Commander, Office of the Judge Advocate General, U.S. Navy, Federal Register Liaison Officer.

[FR Doc. 2010–3215 Filed 2–18–10; 8:45 am]

BILLING CODE 3810–FF–P

DEPARTMENT OF DEFENSE

Department of the Navy

Notice of Open Meeting of the Chief of Naval Operations (CNO) Executive Panel

AGENCY: Department of the Navy, DoD.

ACTION: Notice.

SUMMARY: The CNO Executive Panel will deliberate on the findings and proposed recommendations of the Subcommittee on Improved Concept Generation Development. *The matters to be discussed include:* Navy's concept generation and concept development processes and procedures.

DATES: The meeting will be held on March 11, 2010, at 9 a.m. and last no longer than two hours.

ADDRESSES: The meeting will be held in the Boardroom, CNA, 4825 Mark Center Drive, Alexandria, VA 22311–1846. Some members of the Executive Panel may participate via teleconference.

FOR FURTHER INFORMATION CONTACT: Ms. Bree A. Hartlage, CNO Executive Panel, 4825 Mark Center Drive, Alexandria, VA 22311–1846, 703–681–4907.

SUPPLEMENTARY INFORMATION: Individuals or interested groups may submit written statements for consideration by the Chief of Naval Operations Executive Panel at any time or in response to the agenda of the scheduled meeting. All requests or statements must be submitted to the Designated Federal Officer at the address detailed below at least five days prior to the meeting to allow adequate time for consideration. Requests or statements will not be allowed during the meeting that is the subject of this notice.

The Designated Federal Officer will review all timely submissions with the CNO Executive Panel Chairperson and will ensure they are provided to members of the CNO Executive Panel before the meeting that is the subject of this notice.

Individuals desiring to listen to deliberations via teleconference must submit their contact information (to include email address) to Ms. Hartlage via the below address. There will be limited availability to participate via teleconference and requests will be handled on a first come first served basis.

To contact the Designated Federal Officer, write to Executive Director, CNO Executive Panel (N00K), 4825 Mark Center Drive, 2nd Floor, Alexandria, VA 22311–1846.

Dated: February 12, 2010.

A.M. Vallandingam,

Lieutenant Commander, Office of the Judge Advocate General, U.S. Navy, Federal Register Liaison Officer.

[FR Doc. 2010–3207 Filed 2–18–10; 8:45 am]

BILLING CODE 3810–FF–P

DELAWARE RIVER BASIN COMMISSION

Notice of Commission Meeting and Public Hearing

Notice is hereby given that the Delaware River Basin Commission will hold an informal conference followed by a public hearing on Wednesday, March 3, 2010. The hearing will be part of the Commission's regular business meeting. The conference session and business meeting both are open to the public and will be held at the Commission's office building, located at 25 State Police Drive, West Trenton, New Jersey.

The conference among the commissioners and staff will begin at 10:30 a.m. and will consist of (a) a presentation by representatives of the Schuylkill Action Network and the U.S. Environmental Protection Agency on the U.S. EPA Targeted Watershed Initiative Grant Final Report; and (b) a presentation by the DRBC Commissioner from Pennsylvania on Pennsylvania's Total Dissolved Solids (TDS) Strategy.

The subjects of the public hearing to be held during the 1:30 p.m. business meeting include the dockets listed below:

1. *Gulph Mills Country Club, D–1966–217–2.* An application for the renewal of a ground and surface water withdrawal project to continue withdrawal of 11.886 million gallons per thirty days (mg/30 days) to supply the applicant's golf course irrigation from two pond intakes and existing Well No. 1, completed in the Conestoga Formation. The project is located in the Matsunk Creek Watershed in Upper Merion Township, Montgomery County, Pennsylvania, within the Southeastern Pennsylvania Ground Water Protected Area.

2. *Cabot Corporation, D–1970–072–4.* An application for renewal of an existing 0.222 million gallons per day (mgd) discharge from Outfalls Nos. 001 [(process wastewater and non-contact cooling water (NCCW)], 002 (stormwater, condensate, and NCCW), and 003 (process water treatment system wastewater). The project is located on Swamp Creek at River Mile 92.47—32.3—12.9—12.6 (Delaware River—Schuylkill River—Perkiomen Creek—Swamp Creek), on the border of Douglass Township, Montgomery County, Pennsylvania and Colebrookdale Township, Berks County, Pennsylvania.

3. *Palmerton Borough, D–1981–024 CP–8.* An application for the renewal of a groundwater withdrawal project to continue to withdraw a maximum of 25 mg/30 days to supply the applicant's public water supply system from existing Wells Nos. 4, 6, 7, A and the Foundry Well, all completed in the Bloomsburg Formation Aquifer. The applicant also requests that an existing surface water withdrawal approved by Docket No. D–90–17 be included in the renewal of Docket No. D–81–24 CP–8. The existing surface water withdrawal allocation provides for a maximum of 71 mg/30 days to supply the applicant's industrial water supply demand. The surface water withdrawal is made through two intakes located on the Aquashicola and Pohopoco Creeks, respectively. Wells Nos. 4, 6, 7 and A are located in the Aquashicola Watershed. The Foundry Well alone is located in the Lehigh River Watershed. The wells and intakes are located in Palmerton Borough, Carbon County, Pennsylvania. The site is located within the drainage area of the section of the non-tidal Delaware River known as the Lower Delaware, which is classified as Special Protection Waters.

4. *Antietam Valley Municipal Authority, D–1987–045 CP–3.* An application for approval of the renewal of the Antietam Valley Wastewater Treatment Plant (WWTP). The WWTP will continue to discharge an average annual flow of 1.225 mgd of treated sewage effluent to Antietam Creek, a tributary to the Schuylkill River. The WWTP has a hydraulic design capacity of 2.45 mgd (maximum monthly flow). The facility is located in St. Lawrence Borough, Berks County, Pennsylvania.

5. *Joint Municipal Authority of Wyomissing Valley, D–1991–009 CP–3.* An application for renewal of the Joint Municipal Authority of Wyomissing Valley WWTP. The existing WWTP will continue to discharge 4.0 mgd of treated effluent to the Wyomissing Creek, a tributary of the Schuylkill River. The facility is located in the City of Reading, Berks County, Pennsylvania.

6. *Aqua Pennsylvania—Honesdale System, D–1995–057 CP–2.* An application for renewal of a groundwater withdrawal project with an expired DRBC docket, to continue a withdrawal of 46.20 mg/30 days of groundwater to supply the applicant's public water supply system from existing Wells Nos. Horseshoe 1 and 2, Weidner 3, Goyette 4, Perano 5, and Quarry 6, all completed in the Catskill Geologic Formation. Ownership of the project was recently transferred. The project is located in the West Branch Lackawaxen River Watershed in the Borough of Honesdale and Texas Township, Wayne County, Pennsylvania. The site is located within the drainage area of the section of the non-tidal Delaware River known as the Upper Delaware, which is classified as Special Protection Waters.

7. *Borough of Strausstown, D–2005–006 CP–2.* A renewal application for approval to continue discharging 0.065 mgd of treated effluent from the Borough of Strausstown WWTP. The WWTP is located at River Mile 92.47—76.8—15.4—0.8—6.5—0.4 (Delaware

River—Schuylkill River—Tulpehocken Creek—Northkill Creek—Little Northkill Creek—Jackson Creek) in Pocono Township, Monroe County, Pennsylvania.

8. *NuStar Asphalt Refining, LLC, D–2009–037–1.* An application for approval of an existing 5.48 mgd discharge of untreated industrial wastewater and stormwater through discharge Outfalls Nos. DSN002A, DSN003A, DSN004A, DSN005A, DSN006A, and DSN007A. Stormwater is commingled with condensate from steam heating, sand filter backflush water, and/or tank drain discharges. The asphalt refinery is located in Paulsboro Borough, Gloucester County, New Jersey and the six outfalls are located in Water Quality Zone 4 at or near River Mile 89.66 (Delaware River).

9. *Borough of Brookhaven, D–1966–096 CP–3.* An application for approval of the upgrade of the existing Brookhaven Borough WWTP. The existing trickling filter treatment system is proposed to be replaced with an extended aeration system incorporating the Modified Ludzak-Ettinger (MLE) process. Notice of the project was previously published in the Commission's January 12, 2010 Notice of Applications Received (NAR), as No. D–1998–032 CP–2. This second notice is being provided because of the change in DRBC's assigned docket/application number. The project WWTP will continue to treat an average annual flow of 0.192 mgd and discharge to Chester Creek. The facility is located in the Borough of Brookhaven, Delaware County, Pennsylvania.

10. *Lynn Township, D–1977–041 CP–2.* An application for approval of an expansion of the existing Lynn Township WWTP. The 0.08 mgd WWTP will be expanded to treat an average annual daily flow rate of 0.16 mgd. The WWTP will continue to discharge to Ontelaunee Creek, which is a tributary of the Schuylkill River. The facility is located in Lynn Township, Lehigh County, Pennsylvania.

11. *Borough of Ambler, D–1985–026 CP–5.* An application for approval of a groundwater withdrawal project to continue a withdrawal of up to 90 mg/30 days to supply the applicant's Public Water Supply system from 10 existing wells and one spring (Whitemarsh Spring). The Whitemarsh Spring withdrawal is not included in the current version of the docket, approved in September 2008. The project wells are drilled in the Lower Member of the Stockton Formation and Whitemarsh Spring is located in the Ledger Dolomite. The spring outlet and the project wells are located in the Wissahickon Creek Watershed in Lower Gwynedd and Upper Dublin Townships, Montgomery County, Pennsylvania within the Southeastern Pennsylvania Ground Water Protected Area.

12. *East Vincent Township Municipal Authority, D–1993–032 CP–2.* An application for approval to renew a discharge of up to 2.0 mgd from the existing Veterans Center WWTP. The WWTP will continue to discharge an average of 0.5 mgd of treated domestic waste to the Schuylkill River via Outfall No. 001 at River Mile 92.47—43.5 (Delaware River—Schuylkill River). In addition, modifications to the existing WWTP are proposed, to include a new screen facility, a new filter building, repairs to existing treatment tanks, and other miscellaneous improvements. The Veterans Center is located in East Vincent Township, Chester County, Pennsylvania.

13. *Valley Forge Sewer Authority, D–1995–006 CP–2.* An application for approval of the modification of the Valley Forge Sewer Authority WWTP. The docket holder proposes to replace the current disinfection system (chlorine contact tank) with an ultraviolet light (UV) disinfection system. The modification also includes the re-rate of the WWTP from 8.99 mgd to 9.2 mgd. Although the plant re-rate was completed in 1999, it occurred without the Commission's review. The WWTP will continue to discharge to the Schuylkill River. The facility is located in Schuylkill Township, Chester County, Pennsylvania.

14. *Lehigh County Authority, D–2001–020 CP–5.* An application for approval of an interconnection between Lehigh County Authority's (LCA) Central Lehigh Division (CLD) service area and Allentown's Schantz Spring source. Included in LCA's application was a request for emergency approval of a temporary interconnection and the immediate ability for LCA to use up to 1.0 mgd. Two subsequent phases of construction to permanently interconnect LCA's and Allentown's systems—an "Interim" Phase for 2 mgd and a "Long-Term" Phase for an average of 7 mgd—make up the remainder of the applicant's request. The LCA's groundwater withdrawal project will continue to supply up to 256.24 mg/30 days of water to the applicant's public water supply system. No increase in the existing groundwater allocation is requested. The project is located in the Beekmantown Formation in the Cedar Creek Watershed in Upper Macungie Township, Lehigh County, Pennsylvania, within the drainage area to the section of the non-tidal Delaware River known as the Lower Delaware, which is classified as Special Protection Waters.

15. *Muhlenburg Township Authority, D–2001–030 CP–2.* An application for approval of a ground water withdrawal project to supply a peak monthly withdrawal of up to 153.09 mg/30 days and a total yearly withdrawal of 730 mg of water to the applicant's public water supply system from new Wells Nos. PH–1 and PH–2 and to increase the existing withdrawal of all wells from 168.50 mg/30 days to 228.50 mg/30 days. The increased allocation is requested in order to meet projected increases in service area demand. The project wells are completed in the Allentown Formation in the Laurel Run Watershed in Muhlenburg Township, Berks County, Pennsylvania. The site is located within the drainage area of the Schuylkill River.

16. *Village of Delhi, D–2001–033 CP–2.* An application for approval of a re-rate of an existing 0.815 mgd WWTP to 1.015 mgd. The project WWTP is located at River Mile 330.70—57.4 (Delaware River—West Branch Delaware River), approximately 22 miles upstream of the Cannonsville Reservoir, within the drainage area of the section of the non-tidal Delaware River known as the Upper Delaware, which is classified as Special Protection Waters. The facility is located in the Town of Delhi, Delaware County, New York.

17. *Nazareth Borough Municipal Authority, D–2002–038 CP–2.* An application for the approval of the modification of the existing Nazareth Borough Municipal Authority WWTP. The existing 1.6 mgd WWTP includes two (2) Intermittent Cycle Extended Aeration System (ICEAS) basins. The applicant proposes to modify the WWTP by adding two (2) new additional ICEAS basins. The WWTP will continue to discharge to Shoeneck Creek. Shoeneck Creek is a tributary to the Bushkill Creek, and the project WWTP is located within the drainage area to the section of the non-tidal Delaware River known as the Lower Delaware, which is classified as Special Protection Waters. The facility is located in Lower Nazareth Township, Northampton County, Pennsylvania.

18. *Tidewater Utilities, Inc., D–2005–027 CP–2.* An application for the renewal of an existing groundwater withdrawal project and to increase the current withdrawal from 3.51 mg/30 days to 4.967 mg/30 days to supply the applicant's public water supply system from existing Wells Nos. VWQ–1, VWQ–2, WQ–2, and WQ–4, completed in the Piney Point and Frederica

aquifers. Wells Nos. WQ–2 and WQ–4 were included in previously approved Docket No. D–2005–027 CP–1. Wells Nos. VWQ–01 and VWQ–02 are existing wells that were not included in Docket No. D–2005–027 CP–1. The increased allocation is requested in order to meet projected increases in service area demand. The project is located in the Isaac Branch Watershed of the Saint Jones River in the City of Dover, West Township, Kent County, Delaware.

19. *Ingersoll-Rand Company, D–2006–014–2.* An application for renewal of a 0.09 mgd discharge from the applicant's existing groundwater remediation plant and a related outfall reconfiguration. The WWTP will discharge to Lopatcong Creek, an FW2–NT(C2) stream, which is a tributary of the Delaware River at River Mile 182.0–1.87 (Delaware River—Lopatcong Creek). The WWTP is located in the Town of Phillipsburg, Warren County, New Jersey, within the drainage area of the section of the non-tidal Delaware River known as the Lower Delaware, which is classified as Special Protection Waters.

20. *Beaver Lake Estates, D–2009–038 CP–1.* An application for approval of the expansion of the Beaver Lake Estates Wastewater Treatment Plant (WWTP) from 0.035 mgd to 0.14 mgd. Outfall No. 001 will continue to discharge to an unnamed tributary of Barnum Brook, a tributary of the Neversink River at River Mile 253.64–25.15–2.0–1.12 (Delaware River—Neversink River—Barnum Brook—Unnamed Tributary) in the drainage area of the section of the non-tidal Delaware River known as the Middle Delaware, which is designated as Special Protection Waters. The Beaver Lake Estates WWTP is located in the Town of Thompson, Sullivan County, New York.

21. *Bucks County Water and Sewer Authority, D–1999–013 CP–2.* An application for the approval of the expansion of the existing Bucks County Water and Sewer Authority (BCWSA) Harvey Avenue WWTP. The existing 0.9 mgd WWTP currently utilizes an extended aeration activated sludge process in the form of a Carousel Oxidation Ditch. The existing WWTP treatment train will remain and a second 0.7 mgd treatment train will be constructed, consisting of a Vertical Loop Reactor, clarifiers, and aerobic digester. The proposed addition will increase the hydraulic design capacity of the WWTP to 1.6 mgd. The WWTP will continue to discharge to Cook's Run, a tributary to the Neshaminy Creek. The facility is located in the Borough of Doylestown, Bucks County, Pennsylvania.

22. *Maxatawny Township Municipal Authority, D–2007–001 CP–1.* An application for approval to construct a new Maxatawny Township Municipal Authority WWTP with a discharge of 0.14 mgd. The WWTP will discharge to the Saucony Creek, which is a tributary to the Maiden Creek. The facility will be located in Maxatawny Township, Berks County, Pennsylvania.

23. *Wyeth Pharmaceuticals, D–2009–015–1.* An application for approval of an existing 0.068 mgd discharge of contact cooling water (CCW). CCW will continue to be discharged from the applicant's pharmaceutical facility via Outfalls Nos. 001 and 002. The project outfalls are located at River Mile 92.47–32.36–4.68 (Delaware River—Schuylkill River—Perkiomen Creek). At this location, the Perkiomen Creek is classified by PADEP as a warm water/migrating fishery (WWF/MF). The facility is located in Upper Providence Township, Montgomery County, Pennsylvania.

24. *Geerling's Florist, Inc., D–2009–031–1.* An application for approval of a groundwater withdrawal project to continue to supply up to 4.4 mg/30 days of irrigation water to the applicant's greenhouse and nursery operations from existing Wells Nos. 1, 2, 3, 4, 5, and 6. The project is located in the Brunswick Formation in the Mill Creek and Pidcock Creek Watersheds in Buckingham Township, Bucks County, Pennsylvania within the Southeastern Pennsylvania Ground Water Protected Area.

25. *Chester Valley Golf Club, D–2009–035–1.* An application for approval of a groundwater and surface water withdrawal project to supply up to 5.6 mg/30 days of water from existing sources, including a storage pond, Well No. 11904, and one gravity-fed surface water intake to irrigate the applicant's golf course. The project is located in East Whiteland Township, Chester County, Pennsylvania in the Southeastern Pennsylvania Ground Water Protected Area. The surface water will be withdrawn from an unnamed tributary of Valley Creek. The well is located in the Elbrook Formation within the Valley Creek Sub-basin.

26. *Deb-El Food Products, D–2009–036–1.* An application for approval to construct a 0.05 mgd industrial waste treatment plant (IWTP) that will discharge to the Neversink River at River Mile 253.64—28.7 (Delaware River—Neversink River) in the drainage area of the section of the Non-Tidal Delaware River known as the Middle Delaware, which is designated as Special Protection Waters. The IWTP is located in the Town of Thompson, Sullivan County, New York.

27. *Tuscan/Lehigh Dairies, Inc., D–2009–043–1.* A new groundwater withdrawal project to supply up to 8.7 mg/30 days of water to the applicant's industrial cooling and process system from existing Wells Nos. 3, 4, and 5. The project wells are located in the Brunswick Group in the Towamencin Creek Watershed in Upper Gwynedd Township, Montgomery County, Pennsylvania, within the Southeastern Pennsylvania Ground Water Protected Area.

28. *Bucks County Water and Sewer Authority, D–2009–047 CP–1.* An application to construct a 2 million gallon underground storage tank in the Bensalem Collection System, which is a tributary to the Poquessing Interceptor. The storage tank is proposed to help alleviate wet weather overflows from the Poquessing Interceptor near Holy Family University in the City of Philadelphia during heavy rain events. The Poquessing Interceptor is interconnected with the Delaware Interceptor, which is the pipeline that conveys untreated sanitary waste and stormwater to the Philadelphia Water Department's Northeast Wastewater Treatment Plant. The Bensalem Collection System will continue to transfer untreated sanitary waste and stormwater from Bensalem Township, Bucks County, Pennsylvania to the Poquessing Interceptor, which is interconnected with the Delaware Interceptor in the City of Philadelphia, Pennsylvania.

29. *Sullivan Farms, IV, LLC (Kaufman Farms), D–2009–048 CP–1.* An application to approve the construction of the new 17,282 gpd Kaufman Farms WWTP. The WWTP will land discharge to four on-site infiltration beds. The project is located near River Mile 253.64—9.5—11.5 (Delaware River—Neversink River—Basher Kill) in the drainage area of the section of the non-tidal Delaware River known as the Middle Delaware, which is classified as Special Protection Waters. The project is located in the Village of Wurtsboro, Sullivan County, New York.

In addition to the standard business meeting items, including adoption of the Minutes of the Commission's previous (December 9, 2009) business meeting; announcements of upcoming advisory committee meetings and events of interest; a report on hydrologic conditions; a report by the Executive Director; and a report by the Commission's General Counsel, the business meeting will include public hearings and consideration by the Commission of resolutions: (a)

Approving the Commission's FY 2010–2015 Water Resources Program; (b) authorizing the Executive Director to select a new auditor for the Commission; and (c) in connection with repair of the HVAC System, authorizing the Executive Director to contract for a study of options for expanding capacity of the Goddard Room. In addition the Commissioners will consider adoption of the DRBC fiscal year 2011 operating and capital budgets, on which a hearing was conducted during the December 9, 2009 business meeting. An opportunity for public dialogue will be provided at the end of the meeting.

Draft dockets scheduled for public hearing on March 3, 2010 can be accessed through the Notice of Commission Meeting and Public Hearing on the Commission's Web site, *drbc.net*, ten days prior to the meeting date. Additional public records relating to the dockets may be examined at the Commission's offices. Please contact William Muszynski at 609–883–9500, extension 221, with any docket-related questions.

Note that conference items are subject to change and items scheduled for hearing are occasionally postponed to allow more time for the Commission to consider them. Please check the Commission's Web site, *drbc.net*, closer to the meeting date for changes that may be made after the deadline for filing this notice.

Individuals in need of an accommodation as provided for in the Americans with Disabilities Act who wish to attend the informational meeting, conference session or hearings should contact the commission secretary directly at 609–883–9500 ext. 203 or through the Telecommunications Relay Services (TRS) at 711, to discuss how the Commission can accommodate your needs.

February 8, 2010.

Pamela M. Bush, Esquire,

Commission Secretary.

[FR Doc. 2010–3216 Filed 2–18–10; 8:45 am]

BILLING CODE 6360–01–P

DELAWARE RIVER BASIN COMMISSION

Notice of Public Hearing on Stone Energy Corporation Proposed Surface Water Withdrawal and Natural Gas Well Site

SUMMARY: Because of the high level of public interest in projects within the Delaware Basin that are associated with natural gas drilling activities, the Delaware River Basin Commission (DRBC or "Commission") will hold a special public hearing on two projects sponsored by the Stone Energy Corporation (hereinafter, "Stone Energy") to support natural gas exploration and development activities within the basin. One of the two projects entails a surface water withdrawal from the West Branch Lackawaxen River in Mount Pleasant Township, Pennsylvania (Docket No. D–2009–13–1). The other concerns an existing natural gas well drilling pad site in Clinton Township, Pennsylvania (Docket No. D–2009–18–1). Both projects are located in Wayne County, Pennsylvania, within the drainage area of a portion of the main stem Delaware River that the Commission has classified as Special Protection Waters.

DATES: The hearing will take place on Wednesday, February 24, 2010 from 3 p.m. until 7 p.m. Written comments will be accepted until 5 p.m. on March 12, 2010.

ADDRESSES: The hearing will take place at the Best Western Inn at Hunt's Landing, 126 Routes 6 & 209, Matamoras, Pennsylvania 18336, beginning at 3 p.m. and ending at 7 p.m. Written comments may be submitted at the hearing and may also be sent as follows: via e-mail to *Paula.Schmitt@drbc.state.nj.us* and otherwise to the attention of the Commission Secretary, DRBC, either by fax to (609) 883–9522; U.S. Mail to P.O. Box 7360, West Trenton, NJ 08628–0360; or delivery service to 25 State Police Drive, West Trenton, NJ 08628–0360. Regardless of the method of submission, comments should include the name, affiliation (if any) and address of the commenter and the subject line "Public Comment—Stone Energy Dockets."

FOR FURTHER INFORMATION CONTACT: For questions about the upcoming hearing that are not answered in the section of this notice entitled **SUPPLEMENTARY INFORMATION**, please contact Ms. Paula Schmitt at 609–477–7224 or Ms. Katharine O'Hara at 609–477–7205.

SUPPLEMENTARY INFORMATION: *Draft dockets.* Dockets Nos. D–2009–13–1 (water withdrawal) and D–2009–18–1 (natural gas well drilling pad site) can be viewed on the Commission's Web site, DRBC.net, as a link from this notice.

Hearing Procedure. In order to give everyone who wishes to testify a fair and equal opportunity to do so at the public hearing, which is expected to be heavily attended, the following procedures will be in effect:

- Registration to testify. Individuals who wish to speak at the hearing will be requested to print their names on a numbered list and complete a separate DRBC commenter card. Registrations to present oral testimony will begin at approximately 2:30 p.m. (30 minutes prior to the beginning of the hearing) and will continue until the hearing is closed. There will be no advance registration prior to February 24. For the convenience of those who wish to speak, more than one registration list may be used. Accordingly, speakers will be called in roughly, but not exactly, the order in which they registered.
- Time allowances. In order to allow everyone who wishes to speak an opportunity to do so, individuals will be allotted no more than three minutes to present their oral testimony. Speakers will not be permitted to cede their time to others; however, after everyone who wishes to speak has had a chance to do so, the hearing officer will accept requests from those who wish to supplement their earlier remarks. Individuals who have prepared written testimony are asked to summarize their comments during the three-minute period for oral testimony and to submit their complete written comments either at the public hearing or via e-mail, fax, U.S. Mail, delivery service, or hand delivery in accordance with the **ADDRESSES** section above, before 5 p.m. on March 12.
- Stenographic record. A court stenographer will be present to capture all verbal comments for the public record.
- Other. The sole purpose of the hearing on February 24 is to provide members of the public with an opportunity for oral testimony on the proposed Stone Energy dockets. The Commissioners and staff will not respond to comments at the hearing, nor will they conduct any other business that day. Because a separate hearing on the Stone Energy dockets is being held on February 24, oral testimony on these dockets will not be accepted during the Commission's regularly scheduled business meeting and public hearing on March 3, 2010. A separate notice will be published listing the hearing items and other matters to be considered during the meeting on March 3.

Project Descriptions. Detailed descriptions of the two projects are included in the draft dockets posted on the Commission's Web site (DRBC.net) as links from this notice. Brief descriptions of the two projects follow:

Stone Energy Corporation D–2009–13–1. An application for approval of a surface water withdrawal project to supply up to 21.0 mg/30 days (0.70 mgd) of water from a withdrawal point located on the West Branch Lackawaxen River in Mount Pleasant Township,

Wayne County, Pennsylvania within the drainage area of the section of the Delaware River classified as Special Protection Waters (SPW). The water will be used to support natural gas well stimulation activities in an existing well located in Clinton Township, Wayne County, Pennsylvania (the Matoushek #1 well), also within the drainage area of SPW, and in proposed natural gas wells targeting the Marcellus Shale geologic formation within the SPW drainage area in the Commonwealth of Pennsylvania. Flow-back water from well stimulation activities is proposed to be exported to approved treatment facilities located outside of the Delaware River Basin.

Stone Energy Corporation D–2009–18–1. An application for approval of an existing natural gas well drilling pad site, including an existing vertically orientated natural gas well known as Matoushek #1, located in Clinton Township, Wayne County, Pennsylvania. The well is proposed to be stimulated through hydraulic fracturing from a proposed surface water source. An application for the proposed surface water withdrawal is being reviewed by the Commission under Docket No. D–2009–13–1. The proposed surface water withdrawal is located on the West Branch Lackawaxen River in Mount Pleasant Township, Wayne County, Pennsylvania. The target gas bearing geologic formation of Matoushek #1 is the Devonian-age Marcellus Shale. Flow-back water resulting from stimulation activities at the well is proposed to be exported to approved treatment facilities outside of the Delaware River Basin. The proposed drilling site is located within the drainage area of the section of the non-tidal Delaware River known as the Upper Delaware, which is designated as Special Protection Waters.

Additional public records relating to the draft Stone Energy docket may be available for review consistent with Article 8 of the Commission's Rules of Practice and Procedure (RPP) governing public access to records and information. The RPP are also available on the Commission's Web site, *http://www.drbc.net.*

Individuals in need of an accommodation as provided for in the Americans with Disabilities Act who wish to attend the hearing should contact the Commission secretary directly at 609–883–9500 ext. 203 or through the Telecommunications Relay Services (TRS) at 711, to discuss how the Commission can accommodate your needs.

Dated: February 8, 2010.

Pamela M. Bush,

Commission Secretary.

[FR Doc. 2010–3221 Filed 2–18–10; 8:45 am]

BILLING CODE 6360–01–P

DEPARTMENT OF EDUCATION

Submission for OMB Review; Comment Request

AGENCY: Department of Education.

SUMMARY: The Acting Director, Information Collection Clearance Division, Regulatory Information Management Services, Office of Management invites comments on the submission for OMB review as required by the Paperwork Reduction Act of 1995.

DATES: Interested persons are invited to submit comments on or before March 22, 2010.

ADDRESSES: Written comments should be addressed to the Office of Information and Regulatory Affairs, Attention: Education Desk Officer, Office of Management and Budget, 725 17th Street, NW., Room 10222, New Executive Office Building, Washington, DC 20503, be faxed to (202) 395–5806 or e-mailed to *oira_submission@omb.eop.gov* with a cc: to *ICDocketMgr@ed.gov.*

SUPPLEMENTARY INFORMATION: Section 3506 of the Paperwork Reduction Act of 1995 (44 U.S.C. Chapter 35) requires that the Office of Management and Budget (OMB) provide interested Federal agencies and the public an early opportunity to comment on information collection requests. OMB may amend or waive the requirement for public consultation to the extent that public participation in the approval process would defeat the purpose of the information collection, violate State or Federal law, or substantially interfere with any agency's ability to perform its statutory obligations. The Acting Director, Information Collection Clearance Division, Regulatory Information Management Services, Office of Management, publishes that notice containing proposed information collection requests prior to submission of these requests to OMB. Each proposed information collection, grouped by office, contains the following: (1) Type of review requested, *e.g.* new, revision, extension, existing or reinstatement; (2) Title; (3) Summary of the collection; (4) Description of the need for, and proposed use of, the information; (5) Respondents and frequency of collection; and (6) Reporting and/or Recordkeeping burden. OMB invites public comment.

Dated: February 16, 2010.

James Hyler,

Information Collection Clearance Division, Regulatory Information Management Services, Office of Management.

Institute of Education Sciences

Type of Review: Revision.

Title: Early Childhood Longitudinal Study, Kindergarten Class of 2010–11 (ECLS–K:2011) Full-Scale Collection.

Frequency: Semi-Annually.

Affected Public: Individuals or household.

Reporting and Recordkeeping Hour Burden:

Responses: 104,749.

Burden Hours: 52,273.

Abstract: The Early Childhood Longitudinal Study, Kindergarten Class of 2010–11 (ECLS–K:2011) is a survey that focuses on children's early school experiences beginning with kindergarten and continuing through the fifth grade. It includes interviews with parents, teachers, school administrators, and non-parental care providers, as well as direct child assessments. This submission updates the field test submission of fiscal year 2009 (OMB# 1850–0750 v.5), summarizes the field test results, and includes the final instruments to be used for the Fall 2010 and Spring 2011 kindergarten national data collection, with collection activities scheduled to begin in Summer 2010. This package also outlines and seeks a 60-day federal register notice waiver for the upcoming OMB clearance submission for (1) a possible addition of vision and hearing screenings to the kindergarten data collection and (2) the Fall 2011 first grade recruitment and data collection, Spring 2012 first grade recruitment materials and recruitment burden, and for tracking students for the first and second grade data collections—all of which are expected to have only minor changes to the materials, instruments, and processes already approved in the field test package (OMB# 1850–0750 v.5).

Requests for copies of the information collection submission for OMB review may be accessed from *http://edicsweb.ed.gov,* by selecting the "Browse Pending Collections" link and by clicking on link number 4226. When you access the information collection, click on "Download Attachments " to view. Written requests for information should be addressed to U.S. Department of Education, 400 Maryland Avenue, SW., LBJ, Washington, DC 20202–4537. Requests may also be electronically

mailed to the Internet address *ICDocketMgr@ed.gov* or faxed to 202–401–0920. Please specify the complete title of the information collection when making your request.

Comments regarding burden and/or the collection activity requirements should be electronically mailed to *ICDocketMgr@ed.gov.* Individuals who use a telecommunications device for the deaf (TDD) may call the Federal Information Relay Service (FIRS) at 1–800–877–8339.

[FR Doc. 2010–3258 Filed 2–18–10; 8:45 am]

BILLING CODE 4000–01–P

DEPARTMENT OF EDUCATION

Submission for OMB Review; Comment Request

AGENCY: Department of Education.

SUMMARY: The Acting Director, Information Collection Clearance Division, Regulatory Information Management Services, Office of Management invites comments on the submission for OMB review as required by the Paperwork Reduction Act of 1995.

DATES: Interested persons are invited to submit comments on or before March 22, 2010.

ADDRESSES: Written comments should be addressed to the Office of Information and Regulatory Affairs, Attention: Education Desk Officer, Office of Management and Budget, 725 17th Street, NW., Room 10222, New Executive Office Building, Washington, DC 20503, be faxed to (202) 395–5806 or e-mailed to *oira_submission@omb.eop.gov* with a cc: to *ICDocketMgr@ed.gov.*

SUPPLEMENTARY INFORMATION: Section 3506 of the Paperwork Reduction Act of 1995 (44 U.S.C. Chapter 35) requires that the Office of Management and Budget (OMB) provide interested Federal agencies and the public an early opportunity to comment on information collection requests. OMB may amend or waive the requirement for public consultation to the extent that public participation in the approval process would defeat the purpose of the information collection, violate State or Federal law, or substantially interfere with any agency's ability to perform its statutory obligations. The Acting Director, Regulatory Information Management Services, Office of Management, publishes that notice containing proposed information collection requests prior to submission of these requests to OMB. Each proposed information collection, grouped by office, contains the following: (1) Type of review requested, *e.g.* new, revision, extension, existing or reinstatement; (2) Title; (3) Summary of the collection; (4) Description of the need for, and proposed use of, the information; (5) Respondents and frequency of collection; and (6) Reporting and/or Recordkeeping burden. OMB invites public comment.

Dated: February 12, 2010.

Kate Mullan,

Acting Director, Information Collection Clearance Division, Regulatory Information Management Services, Office of Management.

Federal Student Aid

Type of Review: New.

Title: William D. Ford Federal Direct Loan Program, Federal Direct PLUS Loan Request for Supplemental Information.

Frequency: On Occasion.

Affected Public: Individuals or households.

Reporting and Recordkeeping Hour Burden:

Responses: 101,750. *Burden Hours:* 50,875.

Abstract: The Federal Direct PLUS Loan Request for Supplemental Information serves as the means by which a parent or graduate/professional student Direct PLUS Loan applicant may provide certain information to a school that will assist the school in originating the borrower's Direct PLUS Loan award, as an alternative to providing this information to the school by other means established by the school.

Requests for copies of the information collection submission for OMB review may be accessed from *http://edicsweb.ed.gov,* by selecting the "Browse Pending Collections" link and by clicking on link number 4183. When you access the information collection, click on "Download Attachments " to view. Written requests for information should be addressed to U.S. Department of Education, 400 Maryland Avenue, SW., LBJ, Washington, DC 20202–4537. Requests may also be electronically mailed to the Internet address *ICDocketMgr@ed.gov* or faxed to 202–401–0920. Please specify the complete title of the information collection when making your request.

Comments regarding burden and/or the collection activity requirements should be directed to *ICDocketMgr@ed.gov.* Individuals who use a telecommunications device for the deaf (TDD) may call the Federal Information Relay Service (FIRS) at 1–800–877–8339.

[FR Doc. 2010–3153 Filed 2–18–10; 8:45 am]

BILLING CODE 4000–01–P

DEPARTMENT OF EDUCATION

Office of Elementary and Secondary Education; Overview Information; Improving Literacy Through School Libraries Program Notice Inviting Applications for New Awards for Fiscal Year (FY) 2010

Catalog of Federal Domestic Assistance (CFDA) Number: 84.364A.

DATES: *Applications Available:* February 19, 2010.

Deadline for Transmittal of Applications: April 20, 2010.

Deadline for Intergovernmental Review: June 21, 2010.

I. Funding Opportunity Description

Purpose of Program: The purpose of the Improving Literacy through School Libraries program is to improve student reading skills and academic achievement by providing students with increased access to up-to-date school library materials; well-equipped, technologically advanced school library media centers; and well-trained, professionally certified school library media specialists.

Eligible local educational agencies (LEAs) may use funds for the following activities: Purchasing up-to-date school library media resources, including books; acquiring and using advanced technology that is integrated into the curricula of the school in order to develop and enhance the information literacy, information retrieval, and critical-thinking skills of students; facilitating Internet links and other resource-sharing networks; providing professional development for school library media specialists and providing activities that foster increased collaboration among library specialists, teachers, and administrators; and providing students with access to school libraries during non-school hours, including before and after school, weekends, and summer vacations. (20 U.S.C. 6383(g)).

Program Authority: 20 U.S.C. 6383.

Applicable Regulations: (a) The Education Department General Administrative Regulations (EDGAR) in 34 CFR parts 75, 77, 79, 80, 81, 82, 84, 85, 97, 98, and 99. (b) The notice of final clarification of eligible local activities, published in the **Federal Register** on April 5, 2004 (69 FR 17894).

II. Award Information

Type of Award: Discretionary grants.

Estimated Available Funds: $18,570,000.

Contingent upon the availability of funds and the quality of applications, we may make additional awards in FY

2011 from the list of unfunded applicants from this competition.

Estimated Range of Awards: $100,000–$600,000.

Estimated Average Size of Awards: $350,000.

Estimated Number of Awards: 53.

Note: The Department is not bound by any estimates in this notice.

Project Period: Up to 12 months.

III. Eligibility Information

1. *Eligible Applicants:* LEAs, including charter schools and State-administered schools that are considered LEAs under State law, in which at least 20 percent of the students served by the LEA are from families with incomes below the poverty line based on the most recent satisfactory data available from the U.S. Census Bureau at the time this notice is published. These data are Small Area Income and Poverty Estimates for school districts for income year 2008. A list of LEAs with their family poverty rates (based on these Census Bureau data) is posted on our Web site at *http://www.ed.gov/programs/lsl/eligibility.html.*

Note: Charter schools and State-administered schools must include documentation from their State educational agency (SEA) confirming eligibility for this program.

2. a. *Cost Sharing or Matching:* This program does not require cost sharing or matching.

b. *Supplement-Not-Supplant:* This program involves supplement-not-supplant funding requirements. Funds made available under this program must be used to supplement, and not supplant, other Federal, State, and local funds expended to carry out activities relating to library, technology, or professional development activities (20 U.S.C. 6383(i)).

IV. Application and Submission Information

1. *Address to Request Application Package:* You can obtain an application package via the Internet, or from the Education Publications Center (ED Pubs). To obtain a copy via the Internet, use the following address: *http://www.ed.gov/programs/lsl/applicant.html.* To obtain a copy from ED Pubs, write, fax, or call the following: Education Publications Center, P.O. Box 1398, Jessup, MD 20794–1398. Telephone, toll free: 1–877–433–7827. FAX: (301) 470–1244. If you use a telecommunications device for the deaf (TDD), call, toll free: 1–877–576–7734.

You can contact ED Pubs at its Web site, also: *http://www.ed.gov/pubs/edpubs.html* or at its e-mail address: *edpubs@inet.ed.gov.*

If you request an application from ED Pubs, be sure to identify this program or competition as follows: CFDA number 84.364A.

Individuals with disabilities can obtain a copy of the application package in an accessible format (*e.g.,* braille, large print, audiotape, or computer diskette) by contacting the person or team listed under *Accessible Format* in section VIII of this notice.

2. *Content and Form of Application Submission:* Requirements concerning the content of an application, together with the forms you must submit, are in the application package for this competition.

Page Limit: The application narrative is where you, the applicant, address the selection criteria that reviewers use to evaluate your application. You must limit the application narrative to no more than 15 pages, using the following standards:

- A "page" is 8.5″ x 11″, on one side only, with 1" margins at the top, bottom, and both sides.
- Double space (no more than three lines per vertical inch) all text in the application narrative, including titles, headings, footnotes, quotations, references, and captions, as well as all text in charts, tables, figures, and graphs.
- Use a font that is either 12 point or larger or no smaller than 10 pitch (characters per inch).
- Use one of the following fonts: Times New Roman, Courier, Courier New, or Arial. An application submitted in any other font (including Times Roman or Arial Narrow) will not be accepted.

The page limit does not apply to the cover sheet; the budget section, including the narrative budget justification; the one-page abstract; the other attachments, including the resumes and the endnotes, if applicable; and the assurances and certifications. However, the page limit does apply to all of the application narrative section. The SEA documentation of eligibility is not counted toward the page limit.

Our reviewers will not read any pages of your application that exceed the page limit. Appendices to the narrative are not permitted, with the exception of resumes and endnotes. None of the material sent as appendices to the narrative, with the exception of resumes and endnotes, will be sent to the reviewers.

3. *Submission Dates and Times:*

Applications Available: February 19, 2010.

Deadline for Transmittal of Applications: April 20, 2010.

Applications for grants under this competition must be submitted electronically using the Electronic Grant Application System (e-Application) accessible through the Department's e-Grants site. For information (including dates and times) about how to submit your application electronically, or in paper format by mail or hand delivery if you qualify for an exception to the electronic submission requirement, please refer to section IV. *Other Submission Requirements* of this notice.

We do not consider an application that does not comply with the deadline requirements.

Individuals with disabilities who need an accommodation or auxiliary aid in connection with the application process should contact the person listed under **FOR FURTHER INFORMATION CONTACT** in section VII of this notice. If the Department provides an accommodation or auxiliary aid to an individual with a disability in connection with the application process, the individual's application remains subject to all other requirements and limitations in this notice.

Deadline for Intergovernmental Review: June 21, 2010.

4. *Intergovernmental Review:* This competition is subject to Executive Order 12372 and the regulations in 34 CFR part 79. Information about Intergovernmental Review of Federal Programs under Executive Order 12372 is in the application package for this competition.

5. *Funding Restrictions:* We reference regulations outlining funding restrictions in the *Applicable Regulations* section of this notice.

6. *Other Submission Requirements:* Applications for grants under this competition must be submitted electronically unless you qualify for an exception to this requirement in accordance with the instructions in this section.

a. *Electronic Submission of Applications.*

Applications for grants under the Improving Literacy Through School Libraries program, CFDA Number 84.364A, must be submitted electronically using e-Application, accessible through the Department's e-Grants Web site at: *http://e-grants.ed.gov.* We will reject your application if you submit it in paper format unless, as described elsewhere in this section, you qualify for one of the exceptions to the electronic submission

requirement *and* submit, no later than two weeks before the application deadline date, a written statement to the Department that you qualify for one of these exceptions. Further information regarding calculation of the date that is two weeks before the application deadline date is provided later in this section under *Exception to Electronic Submission Requirement.*

While completing your electronic application, you will be entering data online that will be saved into a database. You may not e-mail an electronic copy of a grant application to us.

Please note the following:

• You must complete the electronic submission of your grant application by 4:30:00 p.m., Washington, DC time, on the application deadline date. E-Application will not accept an application for this competition after 4:30:00 p.m., Washington, DC time, on the application deadline date. Therefore, we strongly recommend that you do not wait until the application deadline date to begin the application process.

• The hours of operation of the e-Grants Web site are 6:00 a.m. Monday until 7:00 p.m. Wednesday; and 6:00 a.m. Thursday until 8:00 p.m. Sunday, Washington, DC time. Please note that, because of maintenance, the system is unavailable between 8:00 p.m. on Sundays and 6:00 a.m. on Mondays, and between 7:00 p.m. on Wednesdays and 6:00 a.m. on Thursdays, Washington, DC time. Any modifications to these hours are posted on the e-Grants Web site.

• You will not receive additional point value because you submit your application in electronic format, nor will we penalize you if you qualify for an exception to the electronic submission requirement, as described elsewhere in this section, and submit your application in paper format.

• You must submit all documents electronically, including all information you typically provide on the following forms: Application for Federal Assistance (SF 424), the Department of Education Supplemental Information for SF 424, Budget Information—Non-Construction Programs (ED 524), and all necessary assurances and certifications. You must attach any narrative sections of your application as files in a .DOC (document), .RTF (rich text), or .PDF (Portable Document) format. If you upload a file type other than the three file types specified in this paragraph or submit a password protected file, we will not review that material.

• Your electronic application must comply with any page limit requirements described in this notice.

• Prior to submitting your electronic application, you may wish to print a copy of it for your records.

• After you electronically submit your application, you will receive an automatic acknowledgement that will include a PR/Award number (an identifying number unique to your application).

• Within three working days after submitting your electronic application, fax a signed copy of the SF 424 to the Application Control Center after following these steps:

(1) Print SF 424 from e-Application.

(2) The applicant's Authorizing Representative must sign this form.

(3) Place the PR/Award number in the upper right hand corner of the hard-copy signature page of the SF 424.

(4) Fax the signed SF 424 to the Application Control Center at (202) 245–6272.

• We may request that you provide us original signatures on other forms at a later date.

Application Deadline Date Extension in Case of e-Application Unavailability: If you are prevented from electronically submitting your application on the application deadline date because e-Application is unavailable, we will grant you an extension of one business day to enable you to transmit your application electronically, by mail, or by hand delivery. We will grant this extension if—

(1) You are a registered user of e-Application and you have initiated an electronic application for this competition; and

(2) (a) E-Application is unavailable for 60 minutes or more between the hours of 8:30 a.m. and 3:30 p.m., Washington, DC time, on the application deadline date; or

(b) E-Application is unavailable for any period of time between 3:30 p.m. and 4:30:00 p.m., Washington, DC time, on the application deadline date.

We must acknowledge and confirm these periods of unavailability before granting you an extension. To request this extension or to confirm our acknowledgement of any system unavailability, you may contact either (1) the person listed elsewhere in this notice under **FOR FURTHER INFORMATION CONTACT** (see VII. Agency Contact) or (2) the e-Grants help desk at 1–888–336–8930. If e-Application is unavailable due to technical problems with the system and, therefore, the application deadline is extended, an e-mail will be sent to all registered users who have initiated an e-Application. Extensions referred to in this section apply only to the unavailability of e-Application.

Exception to Electronic Submission Requirement: You qualify for an exception to the electronic submission requirement, and may submit your application in paper format, if you are unable to submit an application through e-Application because—

• You do not have access to the Internet; or

• You do not have the capacity to upload large documents to e-Application;

and

• No later than two weeks before the application deadline date (14 calendar days or, if the fourteenth calendar day before the application deadline date falls on a Federal holiday, the next business day following the Federal holiday), you mail or fax a written statement to the Department, explaining which of the two grounds for an exception prevents you from using the Internet to submit your application. If you mail your written statement to the Department, it must be postmarked no later than two weeks before the application deadline date. If you fax your written statement to the Department, we must receive the faxed statement no later than two weeks before the application deadline date.

Address and mail or fax your statement to: Pilla Parker, U.S. Department of Education, 400 Maryland Avenue, SW., Room 3E244, Washington, DC 20202–6200. FAX: (202) 260–8969.

Your paper application must be submitted in accordance with the mail or hand delivery instructions described in this notice.

b. *Submission of Paper Applications by Mail.*

If you qualify for an exception to the electronic submission requirement, you may mail (through the U.S. Postal Service or a commercial carrier) your application to the Department. You must mail the original and two copies of your application, on or before the application deadline date, to the Department at the following address: U.S. Department of Education, Application Control Center, Attention: (CFDA Number 84.364A), LBJ Basement Level 1, 400 Maryland Avenue, SW., Washington, DC 20202–4260.

You must show proof of mailing consisting of one of the following:

(1) A legibly dated U.S. Postal Service postmark.

(2) A legible mail receipt with the date of mailing stamped by the U.S. Postal Service.

(3) A dated shipping label, invoice, or receipt from a commercial carrier.

(4) Any other proof of mailing acceptable to the Secretary of the U.S. Department of Education.

If you mail your application through the U.S. Postal Service, we do not accept either of the following as proof of mailing:

(1) A private metered postmark.

(2) A mail receipt that is not dated by the U.S. Postal Service.

If your application is postmarked after the application deadline date, we will not consider your application.

Note: The U.S. Postal Service does not uniformly provide a dated postmark. Before relying on this method, you should check with your local post office.

c. *Submission of Paper Applications by Hand Delivery.*

If you qualify for an exception to the electronic submission requirement, you (or a courier service) may deliver your paper application to the Department by hand. You must deliver the original and two copies of your application by hand, on or before the application deadline date, to the Department at the following address: U.S. Department of Education, Application Control Center, Attention: (CFDA Number 84.364A), 550 12th Street, SW., Room 7041, Potomac Center Plaza, Washington, DC 20202–4260.

The Application Control Center accepts hand deliveries daily between 8:00 a.m. and 4:30:00 p.m., Washington, DC time, except Saturdays, Sundays, and Federal holidays.

Note for Mail or Hand Delivery of Paper Applications: If you mail or hand deliver your application to the Department—

(1) You must indicate on the envelope and—if not provided by the Department—in Item 11 of the SF 424 the CFDA number, including suffix letter, if any, of the competition under which you are submitting your application; and

(2) The Application Control Center will mail to you a notification of receipt of your grant application. If you do not receive this notification within 15 business days from the application deadline date, you should call the U.S. Department of Education Application Control Center at (202) 245–6288.

V. Application Review Information

1. *Selection Criteria:* The maximum score for all of these criteria is 100 points. The maximum score for each criterion is indicated in parentheses. The selection criteria for this competition are from section 1251 of the Elementary and Secondary Education Act of 1965, as amended (ESEA) (20 U.S.C. 6383) and 34 CFR 75.210 and are as follows:

(a) *Meeting the purpose of the statute (10 points).* How well the proposed project addresses the intended outcome of the statute to improve student reading skills and academic achievement by providing students with increased access to up-to-date school library materials; a well-equipped, technologically advanced school library media center; and well-trained, professionally certified school library media specialists.

(b) *Need for school library resources (10 points).* How well the applicant demonstrates the need for school library media improvement, based on the age and condition of school library media resources, including: book collections; access of school library media centers to advanced technology; and the availability of well-trained, professionally certified school library media specialists in schools served by the applicant.

(c) *Use of funds (50 points).* How well the applicant will use the funds made available through the grant to carry out one or more of the following activities that meet its demonstrated needs:

(1) Acquiring up-to-date school library media resources, including books.

(2) Acquiring and using advanced technology, incorporated into the curricula of the school, to develop and enhance students' skills in retrieving and making use of information and in critical thinking.

(3) Facilitating Internet links and other resource-sharing networks among schools and school library media centers, and public and academic libraries.

(4) Providing professional development (as described in the notice of final clarification of eligible local activities published April 5, 2004, in the **Federal Register** (69 FR 17894)), for school library media specialists that is designed to improve literacy in grades K–3, and for school library media specialists as described in section 1222(d)(2) of the ESEA (20 U.S.C. 6383), and providing activities that foster increased collaboration between school library media specialists, teachers, and administrators.

(5) Providing students with access to school libraries during non-school hours, including the hours before and after school, during weekends, and during summer vacation periods.

(d) *Use of scientifically based research (10 points).* How well the applicant will use programs and materials that are grounded in scientifically based research, as defined in section 9101(37) of the ESEA (20 U.S.C. 7801(37)), in carrying out one or more of the activities described under criterion (c).

(e) *Broad-based involvement and coordination (5 points).* How well the applicant will extensively involve school library media specialists, teachers, administrators, and parents in the proposed project activities and effectively coordinate the funds and activities provided under this program with other literacy, library, technology, and professional development funds and activities.

(f) *Evaluation of quality and impact (5 points).* How well the applicant will collect and analyze data on the quality and impact of the proposed project activities, including data on the extent to which the availability of, the access to, and the use of up-to-date school library media resources in the elementary schools and secondary schools served by the applicant increase and on the impact of the project on improving the reading skills of students.

(g) *Quality of project personnel (10 points).* The quality of the personnel who will carry out the proposed project, including the following factors: (1) The extent to which the applicant encourages applications for employment from persons who are members of groups that have traditionally been underrepresented based on race, color, national origin, gender, age, or disability. (2) The qualifications, including relevant training and experience, of the project director or principal investigator.

2. *Review and Selection Process:* An additional factor we consider in selecting an application for an award is the equitable distribution of grants across geographic regions and among LEAs serving urban and rural areas (20 U.S.C. 6383(e)(3)).

VI. Award Administration Information

1. *Award Notices:* If your application is successful, we notify your U.S. Representative and U.S. Senators and send you a Grant Award Notification (GAN). We may notify you informally, also.

If your application is not evaluated or not selected for funding, we notify you.

2. *Administrative and National Policy Requirements:* We identify administrative and national policy requirements in the application package and reference these and other requirements in the *Applicable Regulations* section of this notice.

We reference the regulations outlining the terms and conditions of an award in the *Applicable Regulations* section of this notice and include these and other specific conditions in the GAN. The GAN also incorporates your approved application as part of your binding commitments under the grant.

3. *Reporting:* At the end of your project period, you must submit a final performance report, including financial information, as directed by the Secretary. The Secretary may also require more frequent performance reports under 34 CFR 75.720(c). For specific requirements on reporting, please go to *http://www.ed.gov/fund/grant/apply/appforms/appforms.html.*

4. *Performance Measures:* In response to the Government Performance and Results Act of 1993 (GPRA), the Department developed three measures for evaluating the overall effectiveness of the Improving Literacy Through School Libraries program. These measures gauge improvement in student achievement and resources in the schools and LEAs served by the program by assessing: (1) The percentage of students in schools served by the Improving Literacy Through School Libraries program who are proficient in reading; (2) the number of books and media resources purchased per student, pre- and post-grant, compared to the national average; and (3) the difference in the number of purchases of school library materials (books and media resources) between schools participating in the Improving Literacy Through School Libraries program and the national average. The Department will collect data for these measures from grantees' final performance reports and other data sources.

VII. Agency Contact

For Further Information Contact: Pilla Parker, U.S. Department of Education, 400 Maryland Avenue, SW., room 3E244, Washington, DC 20202–6200. Telephone: (202) 260–3710 or by e-mail: *pilla.parker@ed.gov.*

If you use a TDD, call the Federal Relay Service (FRS), toll free, at 1–800–877–8339.

VIII. Other Information

Accessible Format: Individuals with disabilities can obtain this document and a copy of the application package in an accessible format (*e.g.,* braille, large print, audiotape, or computer diskette) on request to the program contact person listed under **FOR FURTHER INFORMATION CONTACT** in section VII of this notice.

Electronic Access to This Document: You can view this document, as well as all other documents of this Department published in the **Federal Register,** in text or Adobe Portable Document Format (PDF) on the Internet at the following site: *http://www.ed.gov/news/fedregister.*

To use PDF you must have Adobe Acrobat Reader, which is available free at this site.

Note: The official version of this document is the document published in the **Federal Register.** Free Internet access to the official edition of the **Federal Register** and the Code of Federal Regulations is available on GPO Access at: *http://www.gpoaccess.gov/nara/index.html.*

Dated: February 5, 2010.

Thelma Meléndez de Santa Ana,

Assistant Secretary for Elementary and Secondary Education.

[FR Doc. 2010–3164 Filed 2–18–10; 8:45 am]

BILLING CODE 4000–01–P

DEPARTMENT OF EDUCATION

National Assessment Governing Board; Meeting

AGENCY: Department of Education, National Assessment Governing Board.

ACTION: Notice of open meeting and partially closed sessions.

SUMMARY: The notice sets forth the schedule and proposed agenda of a forthcoming meeting of the National Assessment Governing Board. This notice also describes the functions of the Board. Notice of this meeting is required under Section 10(a)(2) of the Federal Advisory Committee Act. This document is intended to notify members of the general public of their opportunity to attend. Individuals who will need special accommodations in order to attend the meeting (*e.g.,* interpreting services, assistive listening devices, materials in alternative format) should notify Munira Mwalimu at 202–357–6938 or at *Munira.Mwalimu@ed.gov* no later than February 19, 2010. We will attempt to meet requests after this date, but cannot guarantee availability of the requested accommodation. The meeting site is accessible to individuals with disabilities.

DATES: March 4–6, 2010.

Times

March 4: Committee Meetings

Assessment Development Committee: Closed Session—8:30 a.m. to 1:30 p.m.

Ad Hoc Committee on NAEP Testing and Reporting on Students with Disabilities and English Language Learners: Open Session—2:00 p.m. to 4:00 p.m.

Executive Committee: Open Session—4:30 p.m. to 5:30 p.m.; Closed Session—5:30 p.m. to 6:00 p.m.

March 5

Full Board: Open Session—8:30 a.m. to 9:30 a.m.; Closed Session—12:30 p.m. to 1:30 p.m.; Open Session—1:30 p.m. to 5:00 p.m.

Committee Meetings

Assessment Development Committee: Open Session—9:30 a.m. to 11:15 a.m.; Closed Session—11:15 a.m. to 12:15 p.m.

Committee on Standards, Design and Methodology: Open Session—9:30 a.m. to 11:30 a.m.; Closed Session 11:30 a.m. to 12:15 p.m.

Reporting and Dissemination Committee: Open Session—9:30 a.m. to 12:15 p.m.

March 6

Nominations Committee: Closed Session—7:30 a.m. to 8:15 a.m.

Full Board: Closed Session—8:30 a.m. to 9:00 a.m.; Open Session—9:30 a.m. to 12:00 p.m.

Location: Park Hyatt Washington, DC, 24th and M Street, NW., Washington, DC 20037.

FOR FURTHER INFORMATION CONTACT: Munira Mwalimu, Operations Officer, National Assessment Governing Board, 800 North Capitol Street, NW., Suite 825, Washington, DC, 20002–4233, *Telephone:* (202) 357–6938.

SUPPLEMENTARY INFORMATION: The National Assessment Governing Board is established under section 412 of the National Education Statistics Act of 1994, as amended.

The Board is established to formulate policy guidelines for the National Assessment of Educational Progress (NAEP). The Board's responsibilities include selecting subject areas to be assessed, developing assessment specifications and frameworks, developing appropriate student achievement levels for each grade and subject tested, developing standards and procedures for interstate and national comparisons, developing guidelines for reporting and disseminating results, and releasing initial NAEP results to the public.

On March 4, from 8:30 a.m. to 1:30 p.m., the Assessment Development Committee will meet in closed session to review test items in reading operational blocks for grades 4 and 8. The Board will be provided with embargoed test items that cannot be discussed in an open meeting. Premature disclosure of data would significantly impede implementation of the NAEP assessments in the subjects, and is therefore protected by exemption 9(B) of section 552b(c) of Title 5 U.S.C.

On March 4, the Ad Hoc Committee on NAEP Testing and Reporting on

Students with Disabilities (SD) and English Language Learners (ELL) will meet in open session from 2:00 p.m. to 4:00 p.m. Thereafter, the Executive Committee will meet in open session from 4:30 p.m. to 5:30 p.m. and in closed session from 5:30 p.m. to 6:00 p.m. During the closed session on March 4, the Executive Committee will receive a briefing from the National Center for Education Statistics (NCES) on options for NAEP contracts covering the 2010–2012 assessment years, based on funding for Fiscal Year 2010–2011. The discussion of contract options and costs will address the implications for congressionally mandated goals and adherence to Board policies on NAEP assessments. This part of the meeting must be conducted in closed session because public discussion of this information would disclose independent government cost estimates and contracting options, adversely impacting the confidentiality of the contracting process. Public disclosure of information discussed would significantly impede implementation of the NAEP contracts, and is therefore protected by exemption 9(B) of section 552b(c) of Title 5 U.S.C.

On March 5, the full Board will meet in open session from 8:30 a.m. to 9:15 a.m. The Board will review and approve the meeting agenda and meeting minutes from the November 2009 Board meeting. This session will be followed by a report from the Governing Board's Executive Director and an update from the Deputy Commissioner of Education Statistics on the work of the National Center for Education Statistics (NCES). Thereafter the Board will recess for Committee meetings from 9:30 a.m. to 12:15 p.m.

From 9:30 a.m. to 11:15 p.m. on March 5, the Assessment Development Committee will meet in open session, followed by a closed session from 11:15 a.m. to 12:15 p.m. During the closed session, the Committee will receive briefings on NAEP assessment development topics related to science interactive computer tasks at grades 4, 8, and 12, reading vocabulary items at grades 4, 8, and 12, and the writing computer-based assessment at grades 8 and 12. The Board will be provided with embargoed test items data that cannot be discussed in an open meeting prior to their official release. Premature disclosure of data would significantly impede implementation of the NAEP assessments in the subjects, and is therefore protected by exemption 9(B) of section 552b(c) of Title 5 U.S.C.

On March 5, the Committee on Standards, Design and Methodology will meet in closed session from 11:30 a.m. to 12:15 p.m. to receive and discuss results of the science achievement levels setting process implemented on January 28–31, 2010. The Board will be provided with embargoed achievement level data that have not yet been released to the public and therefore cannot be discussed in an open meeting. Premature disclosure of data would significantly impede implementation of the NAEP assessment program, and is therefore protected by exemption 9(B) of section 552b(c) of Title 5 U.S.C.

The Reporting and Dissemination Committee will meet in open session on March 5 from 9:30 a.m. to 12:15 p.m. Thereafter, the full Board will meet in closed session from 12:30 p.m. to 1:30 p.m. to receive a briefing on the 2009 NAEP Reading Report Card for Grades 4 and 8. The Board will be provided with embargoed results that cannot be discussed in an open meeting prior to their official release. Premature disclosure of data would significantly impede implementation of the NAEP assessments in the subjects, and is therefore protected by exemption 9(B) of section 552b(c) of Title 5 U.S.C.

Following this closed session, the full Board will meet in open session from 1:30 p.m. to 2:30 p.m. to receive a briefing on the NAEP evaluation on achievement levels and reporting NAEP results. From 2:45 p.m. to 5:00 p.m. the Board will discuss recommended Board actions on the following items:

(1) Modification of NAEP Reading Achievement Level Descriptions.

(2) Governing Board Policy on Testing and Reporting on Students with Disabilities and English Language Learners.

(3) NAEP Technological Literacy Framework.

The March 5, 2010 Board meeting is scheduled to conclude at 5:00 p.m.

On March 6, the Nominations Committee will meet in closed session from 7:30 a.m. to 8:15 a.m. to discuss final candidates being proposed to the Board for appointment terms beginning October 1, 2010. From 8:30 a.m. to 9:00 a.m. the full Board will meet in closed session to take action on the final slate of candidates proposed by the Nominations Committee for submission to Secretary Arne Duncan. These discussions pertain solely to internal personnel rules and practices of an agency and will disclose information of a personal nature where disclosure would constitute an unwarranted invasion of personal privacy. As such, the discussions are protected by exemptions 2 and 6 of section 552b(c) of Title 5 U.S.C.

The full Board will meet in open session on March 6 from 9:00 a.m. to 10:00 a.m. to receive a briefing on NAEP quality assurance. From 10:00 a.m. to noon, the Board will receive Committee reports and take action on Committee recommendations.

The March 6, 2010 session of the Board meeting is scheduled to adjourn at 12:00 p.m.

Detailed minutes of the meeting, including summaries of the activities of the closed sessions and related matters that are informative to the public and consistent with the policy of section 5 U.S.C. 552b(c) will be available to the public within 14 days of the meeting. Records are kept of all Board proceedings and are available for public inspection at the U.S. Department of Education, National Assessment Governing Board, Suite #825, 800 North Capitol Street, NW., Washington, DC, from 9:00 a.m. to 5:00 p.m. Eastern Standard Time, Monday through Friday.

Electronic Access to This Document: You may view this document, as well as all other documents of this Department published in the **Federal Register,** in text or Adobe Portable Document Format (PDF) on the Internet at the following site: *http://www.ed.gov/news/fedregister/index.html.* To use PDF you must have Adobe Acrobat Reader, which is available free at this site. If you have questions about using PDF, call the U.S. Government Printing Office (GPO), toll free at 1–888–293–6498; or in the Washington, DC area at (202) 512–1530.

Note: The official version of this document is the document published in the **Federal Register.** Free Internet access to the official edition of the **Federal Register** and the Code of Federal Regulations is available on GPO Access at: *www.gpoaccess.gov/nara/index.html.*

Dated: February 16, 2010.

Cornelia S. Orr,

Executive Director, National Assessment Governing Board, U.S. Department of Education.

[FR Doc. 2010–3244 Filed 2–18–10; 8:45 am]

BILLING CODE 4000–01–P

DEPARTMENT OF ENERGY

Energy Efficient Building Systems Regional Innovation Cluster Initiative—Joint Federal Funding Opportunity Announcement Information Session

AGENCY: Department of Energy (DOE).

ACTION: Notice of public meeting and webcast.

SUMMARY: This notice announces a conference and webcast for potential applicants and other interested parties to learn about the Joint Federal Funding Opportunity Announcement (see *http://*

www.energy.gov/hubs/eric.htm) issued on February 8, 2010, titled the Energy Efficient Building Systems Regional Innovation Cluster Initiative. A single proposal submitted by a consortium of applicants will be funded at a total of up to $129.7 million over 5 years to foster a regional innovation cluster focused on innovation in energy efficient building technologies and systems design. The DOE funded Energy Efficient Building Systems Design Hub (the "Hub") will serve as a centerpiece of the regional innovation cluster (the "Energy Regional Innovation Cluster" or "E–RIC") and will work to disseminate new technologies into the local marketplace and share best practices with the public and private sectors. By linking researchers in the Hub with local businesses and supporting specialized workforce education and training in the area, the E–RIC will create an economically dynamic region focused on energy efficient buildings technologies and systems design. The Hub, one of three Energy Innovation Hubs to be created by the DOE in Fiscal Year 2010, will bring together a multidisciplinary team of researchers ideally working under one roof to conduct high-risk, high-reward research that overcomes technology challenges through approaches that span basic research to engineering development to commercialization readiness. The Hub will work with key partners funded by EDA, NIST, SBA, DOL, ED and NSF to foster the Energy Regional Innovation Cluster and leverage the collective resources and expertise of the seven federal agencies involved. At this public meeting, representatives from these agencies will discuss the goals and requirements of the joint FOA and answer any questions. To attend the conference or participate in the webcast, please go to *http://www.energy.gov/hubs/apply.htm* and follow the link to the information session site. Please identify your affiliation and state whether you will attend the in-person conference or participate in the webcast.

DATES: Monday, February 22, 2010, 10 a.m.–6 p.m. (Registration begins at 9 a.m.)

ADDRESSES: Ronald Reagan Building and International Trade Center Amphitheater (Concourse Level—closest to Pennsylvania Ave entrance), 1300 Pennsylvania Avenue, NW., Washington, DC.

FOR FURTHER INFORMATION CONTACT: Megan Gatten at *MGatten@smithbucklin.com.*

SUPPLEMENTARY INFORMATION:

Purpose of the Meeting: To communicate the goals and requirements of the Joint Federal Funding Opportunity Announcement (FOA) for the Energy Efficient Building Systems Regional Innovation Cluster Initiative and to answer questions related to the FOA.

Tentative Agenda (Subject To Change)

9 a.m.–10 a.m. Registration

10 a.m.–10:15 a.m. Welcome and Overview of RIC Interagency Taskforce

10:15 a.m.–11:10 a.m. Overview of Regional Innovation Clusters

11:10 a.m.–11:30 a.m. The Need for Energy Efficient Building Innovations

11:30 a.m.–12:15 p.m. Overview of the Joint FOA

12:15 p.m.–1:15 p.m. Lunch Break

1:15 p.m.–4 p.m. Presentations by Participating Agencies

4 p.m.–4:30 p.m. Discussion of submission requirements and procedures

4:30 p.m.–4:50 p.m. Break

4:50 p.m.–5:50 p.m. Questions and Answers

5:50 p.m.–6 p.m. Closing Remarks

Public Participation: In keeping with procedures, members of the stakeholder community and the general public are welcome to observe the business of the conference and to submit their questions. To attend the conference or participate in the webcast, please go to *http://www.energy.gov/hubs/apply.htm* and follow the link to the information session site. Please state whether you will attend the in-person conference or participate in the webcast, and what organization you represent (if appropriate).

Reasonable provision will be made to answer all questions during the meeting and webcast. If you would like to file a written question, you may do so at the meeting or during the webcast, or by contacting the appropriate person identified on the E–RIC Web site at *http://www.energy.gov/hubs/contact_us.htm.*

Minutes: The minutes of the meeting will be available for public review at *http://www.energy.gov/hubs/eric.htm.*

Issued in Washington, DC, on February 16, 2010.

Henry Kelly,

Principal Deputy Assistant Secretary, Energy Efficiency and Renewable Energy, Department of Energy.

[FR Doc. 2010–3303 Filed 2–18–10; 8:45 am]

BILLING CODE 6450–01–P

DEPARTMENT OF ENERGY

Federal Energy Regulatory Commission

[Docket No. IC10–730–001]

Commission Information Collection Activities (FERC–730); Comment Request; Submitted for OMB Review

February 3, 2010.

AGENCY: Federal Energy Regulatory Commission.

ACTION: Notice.

SUMMARY: In compliance with the requirements of section 3507 of the Paperwork Reduction Act of 1995, 44 U.S.C. 3507, the Federal Energy Regulatory Commission (Commission or FERC) has submitted the information collection described below to the Office of Management and Budget (OMB) for review of the information collection requirements. Any interested person may file comments directly with OMB and should address a copy of those comments to the Commission as explained below. The Commission received no comments in response to the **Federal Register** notice (74 FR 59146, 11/17/2009) and has noted that in its submission to OMB.

DATES: Comments on the collection of information are due by March 22, 2010.

ADDRESSES: Address comments on the collection of information to the Office of Management and Budget, Office of Information and Regulatory Affairs, Attention: Federal Energy Regulatory Commission Desk Officer. Comments to OMB should be filed electronically, c/o *oira_submission@omb.eop.gov* and include OMB Control Number 1902–0238 as a point of reference. The Desk Officer may be reached by telephone at 202–395–4638. A copy of the comments should also be sent to the Federal Energy Regulatory Commission and should refer to Docket No. IC10–730–001. Comments may be filed either electronically or in paper format. Those persons filing electronically do not need to make a paper filing. Documents filed electronically via the Internet must be prepared in an acceptable filing format and in compliance with the Federal Energy Regulatory Commission submission guidelines. Complete filing instructions (including the required number of copies and acceptable filing formats) are available at *http://www.ferc.gov/help/submission-guide/electronic-media.asp.* To file the document electronically, access the Commission's Web site and click on Documents & Filing, E-Filing (*http://www.ferc.gov/docs-filing/efiling.asp*),

and then follow the instructions for each screen. First-time users will have to establish a user name and password. The Commission will send an automatic acknowledgement to the sender's e-mail address upon receipt of comments.

All comments may be viewed, printed or downloaded remotely via the Internet through FERC's homepage using the "eLibrary" link. For user assistance, contact *ferconlinesupport@ferc.gov* or toll-free at (866) 208–3676 or for TTY, contact (202) 502–8659.

FOR FURTHER INFORMATION: Ellen Brown may be reached by telephone at (202) 502–8663, by fax at (202) 273–0873, and by e-mail at *ellen.brown@ferc.gov.*

SUPPLEMENTARY INFORMATION: The FERC–730, "Report of Transmission Investment Activity" (OMB Control No. 1902–0239) is filed by public utilities that have been granted incentive rate treatment for specific electric transmission projects. Filing requirements are specified in 18 CFR 35.35(h). Actual and planned transmission investments, and related project data for the most recent calendar year and the subsequent five years, must be reported annually beginning with the calendar year that the Commission granted the incentive rates.

Congress enacted section 1241 of the Energy Policy Act of 2005 (EPAct 2005), adding a new section 219 to the Federal Power Act (FPA), to promote the operation, maintenance and enhancement of electric transmission infrastructure. Congress aimed to benefit consumers by ensuring reliability and/or reducing the cost of delivered power through reducing transmission congestion. In response to EPAct 2005, in Docket No. RM06–4, the Commission amended its regulations to allow for these incentive-based, (including performance-based), rate treatments.

Through Docket No. RM06–4, the Commission amended its regulations in 18 CFR 35.35 to identify the incentive ratemaking treatments allowed under FPA section 219. Incentives are required to be tailored to the type of transmission investments being made, and each applicant must demonstrate that its proposal meets the requirements of FPA section 219.

The Commission needs the information filed under FERC–730 to provide a basis for determining the effectiveness of the rules and regulations and to provide an accurate assessment of the state of the industry with respect to transmission investment.

Action: The Commission is requesting a three-year extension of the current expiration date for the FERC–730, with no changes.

Burden Statement: Public reporting burden for this collection is estimated as follows.

FERC Information collection	Annual number of respondents (1)	Average number of reponses per respondent (2)	Average burden hours per response (3)	Total annual burden hours (1)×(2)×(3)
FERC–730	20	1	30	600

The total estimated annual cost burden to respondents is $37,008.75 (600 hours/2080 hours [1] per year, times $128,297 [2] equals $37,008.75).

The reporting burden includes the total time, effort, or financial resources expended to generate, maintain, retain, disclose, or provide the information including: (1) Reviewing instructions; (2) developing, acquiring, installing, and utilizing technology and systems for the purposes of collecting, validating, verifying, processing, maintaining, disclosing and providing information; (3) adjusting the existing ways to comply with any previously applicable instructions and requirements; (4) training personnel to respond to a collection of information; (5) searching data sources; (6) completing and reviewing the collection of information; and (7) transmitting, or otherwise disclosing the information.

The estimate of cost for respondents is based upon salaries for professional and clerical support, as well as direct and indirect overhead costs. Direct costs include all costs directly attributable to providing this information, such as administrative costs and the cost for information technology. Indirect or overhead costs are costs incurred by an organization in support of its mission. These costs apply to activities which benefit the whole organization rather than any one particular function or activity.

Comments are invited on: (1) Whether the proposed collection of information is necessary for the proper performance of the functions of the Commission, including whether the information will have practical utility; (2) the accuracy of the agency's estimate of the burden of the proposed collection of information, including the validity of the methodology and assumptions used; (3) ways to enhance the quality, utility and clarity of the information to be collected; and (4) ways to minimize the burden of the collection of information on those who are to respond, including the use of appropriate automated, electronic, mechanical, or other technological collection techniques or other forms of information technology, *e.g.* permitting electronic submission of responses.

Kimberly D. Bose,

Secretary.

[FR Doc. 2010–3100 Filed 2–18–10; 8:45 am]

BILLING CODE 6717–01–P

[1] Number of hours an employee works each year.

[2] Average annual salary per employee.

DEPARTMENT OF ENERGY

Federal Energy Regulatory Commission

[Docket No. IC09–912–001]

Commission Information Collection Activities (FERC–912 [1]), Supplemental Notice

February 3, 2010.

AGENCY: Federal Energy Regulatory Commission.

ACTION: Supplemental notice.

SUMMARY: In compliance with the requirements of section 3507 of the Paperwork Reduction Act of 1995, 44 U.S.C. 3507, the Federal Energy Regulatory Commission (Commission or FERC) has submitted the FERC–912 [1] to the Office of Management and Budget (OMB) for review of the information collection requirements.

SUPPLEMENTARY INFORMATION: In response to the Commission's Notice in Docket No. IC09–912–001 requesting public comment (74 FR 63743, 12/4/2009), FERC and OMB received one

[1] FERC–912 ("Cogeneration and Small Power Production, PURPA Section 210(m) Regulations for Termination or Reinstatement of Obligation to Purchase or Sell;" OMB Control No. 1902–0237) covers the reporting requirements in 18 CFR Part 292.

comment. The comment addresses the FERC–912 and relates to a pending rulemaking in Docket No. RM09–23 ("Revisions to Form, Procedures, and Criteria for Certification of Qualifying Facility Status for a Small Power Production or Cogeneration Facility"). The comment was also submitted in Docket No. RM09–23 and will be addressed in Docket No. RM09–23.

FOR FURTHER INFORMATION: Ellen Brown may be reached by telephone at (202) 502–8663, by fax at (202) 273–0873, and by e-mail at *ellen.brown@ferc.gov.*

Kimberly D. Bose,

Secretary.

[FR Doc. 2010–3099 Filed 2–18–10; 8:45 am]

BILLING CODE 6717–01–P

DEPARTMENT OF ENERGY

Federal Energy Regulatory Commission

[Project No. 13606–000]

Natural Currents Energy Services, LLC; Notice of Preliminary Permit Application Accepted for Filing and Soliciting Comments, Motions To Intervene, and Competing Applications

February 4, 2010.

On October 21, 2009, and revised on December 23, 2009 and January 28, 2010, Natural Currents Energy Services, LLC, filed an application for a preliminary permit, pursuant to section 4(f) of the Federal Power Act, proposing to study the feasibility of the Gastineau Channel Tidal Energy Project, located on Gastineau Channel, in the City and Borough of Juneau, Alaska. The sole purpose of a preliminary permit, if issued, is to grant the permit holder priority to file a license application during the permit term. A preliminary permit does not authorize the permit holder to perform any land disturbing activities or otherwise enter upon lands or waters owned by others without the owners' express permission.

The proposed project would either attach turbines to the underside of an existing Coast Guard dock, or anchor the turbines to the bottom of the channel, and would consist of: (1) An existing approximately 100-foot-long by 30-foot-wide U.S. Coast Guard dock connected to the shore by an approximately 550-foot-long boardwalk extending into Gastineau Channel; (2) twelve 25-kilowatt (kW) Red Hawk in-stream turbine modules anchored to the bottom of the channel or attached to the underside of a pivoting t-dock with a total generating capacity of 300 kW; (3) one or more clusters of Tidal In-Stream Energy Conversion Devices (TISEC devices) to transmit the electricity from the turbines to the underwater transmission line; (4) an approximately 600-foot-long, 480-volt underwater transmission line connecting the TISEC device to an existing above-ground local distribution system; and (5) appurtenant facilities. The project would have an estimated average annual generation of 1,200 megawatt-hours.

Applicant Contact: Roger Bason, President, Natural Currents Energy Services, LLC, 24 Roxanne Boulevard, Highland, NY 12561; phone: (845) 691–4009.

FERC Contact: Jennifer Harper, 202–502–6136.

Deadline for filing comments, motions to intervene, competing applications (without notices of intent), or notices of intent to file competing applications: 60 days from the issuance of this notice. Competing applications and notices of intent must meet the requirements of 18 CFR 4.36. Comments, motions to intervene, notices of intent, and competing applications may be filed electronically via the Internet. See 18 CFR 385.2001(a)(1)(iii) and the instructions on the Commission's Web site (*http://www.ferc.gov/docs-filing/ferconline.asp*) under the "eFiling" link. For a simpler method of submitting text only comments, click on "Quick Comment." For assistance, please contact FERC Online Support at *FERCOnlineSupport@ferc.gov;* call toll-free at (866) 208–3676; or, for TTY, contact (202) 502–8659. Although the Commission strongly encourages electronic filing, documents may also be paper-filed. To paper-file, mail an original and eight copies to: Kimberly D. Bose, Secretary, Federal Energy Regulatory Commission, 888 First Street, NE., Washington, DC 20426.

More information about this project, including a copy of the application, can be viewed or printed on the "eLibrary" link of Commission's Web site at *http://www.ferc.gov/docs-filing/elibrary.asp.* Enter the docket number (P–13606) in the docket number field to access the document. For assistance, contact FERC Online Support.

Kimberly D. Bose,

Secretary.

[FR Doc. 2010–3107 Filed 2–18–10; 8:45 am]

BILLING CODE 6717–01–P

DEPARTMENT OF ENERGY

Federal Energy Regulatory Commission

[Project No. 13652–000]

Gary E. Hall and Rita C. Hall; Notice of Application Accepted for Filing With the Commision, Soliciting Motions To Intervene and Protests, Ready for Environmental Analysis, Intent To Waive Solicitation of Additional Study Requests, Intent To Waive Scoping, Intent To Waive Three Stage Consultation, Soliciting Comments, Terms and Conditions, Recommendations, and Prescriptions, and Establishing an Expedited Schedule for Processing

February 5, 2010.

Take notice that the following hydroelectric application has been filed with the Commission and is available for public inspection.

a. *Type of Application:* Exemption From Licensing.

b. *Project No.:* 13652–000.

c. *Date filed:* January 11, 2010.

d. *Applicant:* Gary E. Hall and Rita C. Hall.

e. *Name of Project:* Potter Creek Hydroelectric Project.

f. *Location:* The project is located on Potter Creek in Flathead County, Montana. The project would be located on private property and 0.51 acre of federal lands in the Flathead National Forest, managed by the Forest Service. The applicant owns the private property on which the project will be located.

g. *Filed Pursuant to:* Public Utilities Regulatory Policies Act of 1978, 16 U.S.C. 2705, 2708.

h. *Applicant Contact:* Mr. Gary E. Hall and Ms. Rita C. Hall, P.O. Box 133, Olney, MT 59927, (406) 881–2345.

i. *FERC Contact:* Jennifer Harper, (202) 502–6136.

j. *Cooperating Agencies:* We are asking Federal, state, and local agencies and Indian tribes with jurisdiction and/or special expertise with respect to environmental issues to cooperate with us in the preparation of the environmental document. Agencies who would like to request cooperating status should follow the instructions for filing comments described in item l below.

k. Pursuant to the Commission's regulations, 18 CFR 4.32(b)(7), if any resource agency, Indian tribe, or person believes that an additional scientific study should be conducted in order to form a factual basis for complete analysis of the application on its merits, the resource agency, Indian tribe, or person must file a request for the study with the Commission. Due to the small

size and remote location of this project, the applicant's close coordination with the Forest Service in the preparation of the application, and the lack of any study requests submitted during pre-filing consultation with the FWS, Montana Department of Fish, Wildlife and Parks, Montana State Historic Preservation Office, and the Flathead Conservation District, we accept the consultation that has occurred on this project during the pre-filing period as satisfying our requirements for requesting additional studies specified in 18 CFR 4.32(b)(7).

l. Deadline for filing motions to intervene and protests, comments, terms and conditions, recommendations, and prescriptions: Due to the small size and remote location of this project, as well as the applicant's close coordination with the Forest Service in the preparation of the application, the 60-day timeframe specified in 18 CFR 4.34(b) for filing motions to intervene and protests, comments, terms and conditions, recommendations, and prescriptions is shortened to 30 days from the issuance date of this notice. All reply comments filed in response to comments submitted by any resource agency, Indian tribe, or person, must be filed with the Commission within 45 days from the date of this notice

All documents may be filed electronically via the Internet in lieu of paper. See 18 CFR 385.2001(a)(1)(iii) and the instructions on the Commission's Web site (*http://www.ferc.gov/docs-filing/ferconline.asp*) under the "eFiling" link. For a simpler method of submitting text only comments, click on "Quick Comment." For assistance, please contact FERC Online Support at *FERCOnlineSupport@ferc.gov;* call toll-free at (866) 208–3676; or, for TTY, contact (202) 502–8659. Although the Commission strongly encourages electronic filing, documents may also be paper-filed. To paper-file, mail an original and eight copies to: Kimberly D. Bose, Secretary, Federal Energy Regulatory Commission, 888 First Street, NE., Washington, DC 20426.

The Commission's Rules of Practice require all intervenors filing documents with the Commission to serve a copy of that document on each person on the official service list for the project. Further, if an intervenor files comments or documents with the Commission relating to the merits of an issue that may affect the responsibilities of a particular resource agency, they must also serve a copy of the document on that resource agency.

m. This application has been accepted for filing and is now ready for environmental analysis.

n. *Project Description:* The Potter Creek Hydroelectric Project would consist of the following: (1) An existing 50-foot-wide by 5-foot-high wood slat and rock impoundment; (2) an existing 0.07-acre reservoir having a storage capacity of 0.14 acre-feet of water; (3) a 4-inch-diameter, 111-foot-long PVC penstock; (4) a turbine box containing one generating unit with total installed generating capacity of 50 watts; and (5) an approximately 335-foot-long transmission line from the turbine box to the Hall residence. The project would have an average annual generation of 438 kilowatt-hours. The dam, reservoir, penstock, turbine box, and 293 feet of the transmission line are located on federal lands in the Flathead National Forest managed by the Forest Service. The applicant proposes to operate the project as run-of-river.

o. A copy of the application is available for review at The Commission in the Public Reference Room or may be viewed on the Commission's Web site at *http://www.ferc.gov* using the "eLibrary" link. Enter the docket number excluding the last three digits in the docket number field to access the document. For assistance, contact FERC Online Support. A copy is also available for inspection and reproduction at the address in item h above.

Register online at *http://www.ferc.gov/docs-filing/esubscription.asp* to be notified via email of new filings and issuances related to this or other pending projects. For assistance, contact FERC Online Support.

p. Any qualified applicant desiring to file a competing application must submit to the Commission, on or before the specified intervention deadline date, a competing development application, or a notice of intent to file such an application. Submission of a timely notice of intent allows an interested person to file the competing development application no later than 120 days after the specified intervention deadline date. Applications for preliminary permits will not be accepted in response to this notice.

A notice of intent must specify the exact name, business address, and telephone number of the prospective applicant, and must include an unequivocal statement of intent to submit a development application. A notice of intent must be served on the applicant(s) named in this public notice.

Anyone may submit comments, a protest, or a motion to intervene in accordance with the requirements of Rules of Practice and Procedure, 18 CFR 385.210, .211, and .214. In determining the appropriate action to take, the Commission will consider all protests or other comments filed, but only those who file a motion to intervene in accordance with the Commission's Rules may become a party to the proceeding. Any comments, protests, or motions to intervene must be received on or before the specified comment date for the particular application.

All filings must (1) bear in all capital letters the title "PROTEST", "MOTION TO INTERVENE", "NOTICE OF INTENT TO FILE COMPETING APPLICATION," "COMPETING APPLICATION," "COMMENTS," "REPLY COMMENTS," "RECOMMENDATIONS," "TERMS AND CONDITIONS," or "PRESCRIPTIONS;" (2) set forth in the heading the name of the applicant and the project number of the application to which the filing responds; (3) furnish the name, address, and telephone number of the person protesting or intervening; and (4) otherwise comply with the requirements of 18 C.F.R. §§ 385.2001 through 385.2005. Agencies may obtain copies of the application directly from the applicant. A copy of any protest or motion to intervene must be served upon each representative of the applicant specified in the particular application. A copy of all other filings in reference to this application must be accompanied by proof of service on all persons listed in the service list prepared by the Commission in this proceeding, in accordance with 18 CFR 4.34(b) and 385.2010.

q. With this notice, we are initiating consultation with the Montana State Historic Preservation Office, as required by § 106, National Historic Preservation Act, and the regulations of the Advisory Council on Historic Preservation, 36 CFR Part 800.4.

r. Procedural schedule and final amendments: We intend to accept the consultation that has occurred on this project during the pre-filing period as satisfying our requirements for the standard 3-stage consultation process under 18 CFR 4.38 and for National Environmental Policy Act scoping. The application will be processed according to the following procedural schedule. Revisions to the schedule may be made as appropriate.

Milestone	Target date
Comments, recommendations, and terms and conditions due.	March 8, 2010.
Reply comments due	March 23, 2010.

Milestone	Target date
Notice of the availability of the EA.	April, 2010.

s. Based on a review of the exemption application and resource agency consultation letters, Commission staff intend to prepare a single environmental assessment (EA). The EA will assess the potential effects of project construction and operation on geology and soils, aquatic, terrestrial, threatened and endangered species, recreation and land use, aesthetic, and cultural and historic resources. Because staff believe the issues that need to be addressed in its EA have been adequately identified, with this notice, we are soliciting comments on our intent to waive scoping for the Potter Creek Hydroelectric Project. Comments, terms and conditions, recommendations, prescriptions, and reply comments, if any, will be addressed in an EA.

Final amendments to the application must be filed with the Commission no later than 30 days from the issuance date of the notice of ready for environmental analysis.

Kimberly D. Bose,

Secretary.

[FR Doc. 2010–3103 Filed 2–18–10; 8:45 am]

BILLING CODE 6717–01–P

DEPARTMENT OF ENERGY

Federal Energy Regulatory Commission

[Docket No. AD04–4–001]

Panel Member List for Hydropower Licensing Study Dispute Resolution; Notice Extending Filing Date for Applications for Panel Member List for Hydropower Licensing Study Dispute Resolution

February 4, 2010.

On October 20, 2009, the Federal Energy Regulatory Commission (Commission) requested applications to be included on a list of resource experts willing to serve as a third panel member in the Commission's hydropower integrated licensing process (ILP) study dispute resolution process. We are extending the application period until August 15, 2010, to afford interested parties more time to respond to the original request. Respondents to the initial request need not reapply to be considered. Information on the application contents and how to file applications can be found in the October 20, 2009 notice or on the Commission's Web page at: *http://www.ferc.gov/industries/hydropower.asp*. For more information please contact David Turner at (202) 502–6091 or *david.turner@ferc.gov.*

Nathaniel J. Davis, Sr.,

Deputy Secretary.

[FR Doc. 2010–3158 Filed 2–18–10; 8:45 am]

BILLING CODE 6717–01–P

DEPARTMENT OF ENERGY

Federal Energy Regulatory Commission

[Project No. 13605–000]

Natural Currents Energy Services, LLC; Notice of Preliminary Permit Application Accepted for Filing and Soliciting Comments, Motions To Intervene, and Competing Applications

February 4, 2010.

On October 21, 2009, and revised on January 28, 2009, Natural Currents Energy Services, LLC, filed an application for a preliminary permit, pursuant to section 4(f) of the Federal Power Act, proposing to study the feasibility of the Icy Passage Tidal Energy Project, located in Icy Passage, in the Hoonah-Angoon Borough, Alaska. The sole purpose of a preliminary permit, if issued, is to grant the permit holder priority to file a license application during the permit term. A preliminary permit does not authorize the permit holder to perform any land disturbing activities or otherwise enter upon lands or waters owned by others without the owners' express permission.

The proposed project would either attach turbines to the underside of an existing State of Alaska dock, or anchor the turbines to the bottom of the passage, and would consist of: (1) An existing approximately 70-foot-long by 220-foot-wide State of Alaska dock connected to the shore by an approximately 1,130-foot-long boardwalk extending into Icy Passage; (2) twelve 25-kilowatt (kW) Red Hawk in-stream turbine modules with a total generating capacity of 300 kW; (3) one or more clusters of Tidal In-Stream Energy Conversion Devices (TISEC devices) to transmit the electricity from the turbines to the underwater transmission line; (4) an approximately 3,900-foot-long, 480-volt underwater transmission line connecting the TISEC device to an existing above-ground local distribution system; and (5) appurtenant facilities. The project would have an estimated average annual generation of 1,200 megawatt-hours.

Applicant Contact: Roger Bason, President, Natural Currents Energy Services, LLC, 24 Roxanne Boulevard, Highland, NY 12561; phone: (845) 691–4009.

FERC Contact: Jennifer Harper, 202–502–6136.

Deadline for filing comments, motions to intervene, competing applications (without notices of intent), or notices of intent to file competing applications: 60 days from the issuance of this notice. Competing applications and notices of intent must meet the requirements of 18 CFR 4.36. Comments, motions to intervene, notices of intent, and competing applications may be filed electronically via the Internet. See 18 CFR 385.2001(a)(1)(iii) and the instructions on the Commission's Web site (*http://www.ferc.gov/docs-filing/ferconline.asp*) under the "eFiling" link. For a simpler method of submitting text only comments, click on "Quick Comment." For assistance, please contact FERC Online Support at *FERCOnlineSupport@ferc.gov;* call toll-free at (866) 208–3676; or, for TTY, contact (202) 502–8659. Although the Commission strongly encourages electronic filing, documents may also be paper-filed. To paper-file, mail an original and eight copies to: Kimberly D. Bose, Secretary, Federal Energy Regulatory Commission, 888 First Street, NE., Washington, DC 20426.

More information about this project, including a copy of the application, can be viewed or printed on the "eLibrary" link of Commission's Web site at *http://www.ferc.gov/docs-filing/elibrary.asp.* Enter the docket number (P–13605) in the docket number field to access the document. For assistance, contact FERC Online Support.

Kimberly D. Bose,

Secretary.

[FR Doc. 2010–3106 Filed 2–18–10; 8:45 am]

BILLING CODE 6717–01–P

DEPARTMENT OF ENERGY

Federal Energy Regulatory Commission

[Project No. 13237–001]

Whitman River Dam, Inc.; Notice of Intent To File License Application, Filing of Pre-Application Document, and Approving Use of the Traditional Licensing Process

February 5, 2010.

a. *Type of Filing:* Notice of Intent to File License Application and Request to Use the Traditional Licensing Process.

b. *Project No.:* 13237–001.

c. *Date Filed:* November 20, 2009.

d. *Submitted By:* Whitman River Dam, Inc.

e. *Name of Project:* Crocker Pond Project.

f. *Location:* The project would be located at the existing Crocker Pond Dam, on the Whitman River, in Worcester County, Massachusetts. The project would not occupy any federal land.

g. *Filed Pursuant to:* 18 CFR 5.3 of the Commission's regulations.

h. *Potential Applicant Contact:* Mr. Robert T. Francis, Whitman River Dam, Inc., P.O. Box 145, 10 Tommy Francis Road, Westminster, MA 01473; (978) 874–1010.

i. *FERC Contact:* Jeff Browning, (202) 502–8677, or *jeffrey.browning@ferc.gov.*

j. Whitman River Dam, Inc. filed its request to use the Traditional Licensing Process on November 20, 2009. Whitman River Dam, Inc. provided public notice of its request on December 17, 2009. In a letter dated February 1, 2010, the Director of the Office of Energy Projects approved the Whitman River Dam, Inc. request to use the Traditional Licensing Process.

k. With this notice, we are initiating informal consultation with: (a) the U.S. Fish and Wildlife Service under section 7 of the Endangered Species Act; and (b) the Massachusetts State Historic Preservation Officer, as required by section 106, National Historical Preservation Act, and the implementing regulations of the Advisory Council on Historic Preservation at 36 CFR 800.2.

l. Whitman River Dam, Inc. filed a Pre-Application Document (PAD; including a proposed process plan and schedule) with the Commission, pursuant to 18 CFR 5.6 of the Commission's regulations.

m. A copy of the PAD is available for review at the Commission in the Public Reference Room or may be viewed on the Commission's Web site (*http://www.ferc.gov*), using the "eLibrary" link. Enter the docket number, excluding the last three digits in the docket number field to access the document. For assistance, contact FERC Online Support at *FERCONlineSupport@ferc.gov* or toll free at 1–866–208–3676, or for TTY, (202) 502–8659. A copy is also available for inspection and reproduction at the address in paragraph h.

Register online at *http://ferc.gov/esubscribenow.htm* to be notified via e-mail of new filing and issuances related to this or other pending projects. For assistance, contact FERC Online Support.

Kimberly D. Bose,

Secretary.

[FR Doc. 2010–3105 Filed 2–18–10; 8:45 am]

BILLING CODE 6717–01–P

DEPARTMENT OF ENERGY

Federal Energy Regulatory Commission

[Docket No. CP04–379–003]

Pine Prairie Energy Center, LLC; Notice of Application

February 3, 2010.

Take notice that on January 26, 2010, Pine Prairie Energy Center, LLC (Pine Prairie), 333 Clay Street, Suite 1100, Houston, TX 77002, filed an abbreviated application in Docket No. CP04–379–003, pursuant to section 7(c) of the Natural Gas Act (NGA) as amended, for an order amending the certificate of public convenience and necessity issued in Docket Nos. CP04–379–000, CP04–379–001, and CP04–379–002, to authorize Pine Prairie to: (1) Install six 5,750 hp electric motor drive compressor units instead of the four 4,700 hp natural gas-fueled units previously authorized; (2) construct and operate a new electrical substation at the Pine Prairie Gas Handling Facility and approximately 1,200 feet of aerial electric power lines between the new substation and the existing substation and (3) increase the authorized daily delivery capacity at Pine Prairie's existing interconnection with Columbia Gulf Transmission Company to permit higher rates of delivery at peak conditions. Pine Prairie also seeks reaffirmation of its authority to charge market based rates for storage and hub services, all as more fully set forth in the application which is on file with the Commission and open for public inspection.

Any questions concerning this application should be directed to James F. Bowe, Jr., Dewey & LeBoeuf LLP, 1101 New York Avenue, NW., Washington, DC 20005, 202–346–8000 (phone), 202–346–8102 (fax), or via e-mail at *jbowe@dl.com.*

Pursuant to section 157.9 of the Commission's rules, 18 CFR 157.9, within 90 days of this Notice the Commission staff will either complete its environmental assessment (EA) and place it into the Commission's public record (eLibrary) for this proceeding; or issue a Notice of Schedule for Environmental Review. If a Notice of Schedule for Environmental Review is issued, it will indicate, among other milestones, the anticipated date for the Commission staff's issuance of the final environmental impact statement (FEIS) or EA for this proposal. The filing of the EA in the Commission's public record for this proceeding or the issuance of a Notice of Schedule for Environmental Review will serve to notify federal and state agencies of the timing for the completion of all necessary reviews, and the subsequent need to complete all federal authorizations within 90 days of the date of issuance of the Commission staff's FEIS or EA.

This filing is available for review at the Commission in the Public Reference Room or may be viewed on the Commission's Web site at *http://www.ferc.gov* using the "e-Library" link. Enter the docket number excluding the last three digits in the docket number field to access the document. For assistance, contact FERC at *FERCOnlineSupport@ferc.gov* or call toll-free, (866) 208–3676, or for TTY, (202) 502–8659.

There are two ways to become involved in the Commission's review of this project. First, any person wishing to obtain legal status by becoming a party to the proceedings for this project should, on or before the comment date stated below file with the Federal Energy Regulatory Commission, 888 First Street, NE., Washington, DC 20426, a motion to intervene in accordance with the requirements of the Commission's Rules of Practice and Procedure (18 CFR 385.214 or 385.211) and the Regulations under the NGA (18 CFR 157.10). A person obtaining party status will be placed on the service list maintained by the Secretary of the Commission and will receive copies of all documents filed by the applicant and by all other parties. A party must submit 14 copies of filings made in the proceeding with the Commission and must mail a copy to the applicant and to every other party. Only parties to the proceeding can ask for court review of Commission orders in the proceeding.

However, a person does not have to intervene in order to have comments considered. The second way to participate is by filing with the Secretary of the Commission, as soon as possible, an original and two copies of comments in support of or in opposition to this project. The Commission will consider these comments in determining the appropriate action to be taken, but the filing of a comment alone will not serve to make the filer a party to the proceeding. The Commission's rules require that persons filing comments in opposition to the project provide copies of their protests only to

the party or parties directly involved in the protest.

Persons who wish to comment only on the environmental review of this project should submit an original and two copies of their comments to the Secretary of the Commission. Environmental commenters will be placed on the Commission's environmental mailing list, will receive copies of the environmental documents, and will be notified of meetings associated with the Commission's environmental review process. Environmental commenters will not be required to serve copies of filed documents on all other parties. However, the non-party commenters will not receive copies of all documents filed by other parties or issued by the Commission (except for the mailing of environmental documents issued by the Commission) and will not have the right to seek court review of the Commission's final order.

Protests and interventions may be filed electronically via the Internet in lieu of paper; see, 18 CFR 385.2001(a)(1)(iii) and the instructions on the Commission's Web site under the "e-Filing" link. The Commission strongly encourages electronic filings.

Comment Date: February 24, 2010.

Kimberly D. Bose,

Secretary.

[FR Doc. 2010–3102 Filed 2–18–10; 8:45 am]

BILLING CODE 6717–01–P

DEPARTMENT OF ENERGY

Federal Energy Regulatory Commission

[Project No. 2354–10]

Chandra Coffee and Rabun Boatworks, Complainants v. Georgia Power Company, Respondent; Notice of Complaint

February 3, 2010.

Take notice that on December 14, 2009, as amended on January 8, 2010, Chandra Coffee and Rabun Boatworks (Complainants) filed with the Federal Regulatory Commission (Commission or FERC) a complaint against Georgia Power Company (Respondent), licensee of the North Georgia Hydroelectric Project No. 2354. Complainants own and operate a storage and boat rental business approximately one mile from Lake Rabun. Complainants, after contracting with boating customers off-site, place boats in the water, assist in loading and unloading boaters, and facilitate retrieval of boats from the water at the Lake Rabun Recreation Area. Complainants allege that Respondent has impermissibly denied them access to the public boat ramp at the Lake Rabun Recreation Area, part of the Respondent's North Georgia Project. Complainants request that the Commission investigate and assert that Respondent has not complied with its FERC license.

Complainants certify that a copy of the complaint was served on counsel for Georgia Power Company.

Any person desiring to intervene or to protest this filing must file in accordance with Rules 211 and 214 of the Commission's Rules of Practice and Procedure (18 CFR 385.211, 385.214). Protests will be considered by the Commission in determining the appropriate action to be taken, but will not serve to make protestants parties to the proceeding. Any person wishing to become a party must file a notice of intervention or motion to intervene, as appropriate. The Respondent's answer and all interventions, or protests must be filed on or before the comment date. The Respondent's answer, motions to intervene, and protests must be served on the Complainants.

The Commission encourages electronic submission of protests and interventions in lieu of paper using the "eFiling" link at *http://www.ferc.gov.* Persons unable to file electronically should submit an original and 14 copies of the protest or intervention to the Federal Energy Regulatory Commission, 888 First Street, NE., Washington, DC 20426.

This filing is accessible on-line at *http://www.ferc.gov,* using the "eLibrary" link and is available for review in the Commission's Public Reference Room in Washington, DC. There is an "eSubscription" link on the Web site that enables subscribers to receive e-mail notification when a document is added to a subscribed docket(s). For assistance with any FERC Online service, please e-mail *FERCOnlineSupport@ferc.gov,* or call (866) 208–3676 (toll free). For TTY, call (202) 502–8659.

Comment Date: 5 p.m. Eastern Time on February 23, 2010.

Kimberly D. Bose,

Secretary.

[FR Doc. 2010–3097 Filed 2–18–10; 8:45 am]

BILLING CODE 6717–01–P

DEPARTMENT OF ENERGY

Federal Energy Regulatory Commission

[Project No. 2232–566]

Duke Energy Carolinas, LLC; Notice of Availability of Environmental Assessment

February 3, 2010.

In accordance with the National Environmental Policy Act of 1969, as amended, and the Federal Energy Regulatory Commission's (Commission) regulations, (18 CFR Part 380), Commission staff has prepared an environmental assessment (EA) regarding Duke Energy Carolinas, LLC's (Duke), licensee for the Catawba-Wateree Project, request for approval of an agreement between the Town of Mooresville, North Carolina (Mooresville) and Duke, authorizing Mooresville to operate and maintain expanded water intake facilities and withdraw water from Lake Norman. The Catawba-Wateree Project (FERC No. 2232) is located on the Catawba and Wateree Rivers, in nine counties in North Carolina and five counties in South Carolina. Lake Norman is the fifth reservoir in the series of reservoirs used by the project, and is located on the Catawba River.

In its application, Duke proposes to grant an expansion of Mooresville's water intake facilities and increase Mooresville's water withdrawal rate from Lake Norman. The existing water intake structure would be expanded by connecting a new pipe to the existing water intake structure and the existing pumping plant located on Mooresville-owned property within the project boundary. Mooresville has requested that the expanded facility have a gross maximum allowable water withdrawal rate of 18 million gallons per day (MGD), a 6 MGD increase from the current approved maximum withdrawal rate of 12 MGD, as approved by the Commission on August 23, 2005. The water intake and pump facility are located in Iredell County, North Carolina.

The EA is attached to a Commission order titled, "Order Modifying and Approving Non-Project Use of Project Lands and Waters," which was issued February 3, 2010, and is available for review at the Commission's Public Reference Room, or it may be viewed on the Commission's Web site at *http://www.ferc.gov* using the "eLibrary" link. Enter the docket number (P–2232) in the docket number field to access the document. For assistance with eLibrary, contact *FERCOnlineSupport@ferc.gov* or

toll-free at (866) 208–3676; for TTY, contact (202) 502–8659.

Kimberly D. Bose,

Secretary.

[FR Doc. 2010–3101 Filed 2–18–10; 8:45 am]

BILLING CODE 6717–01–P

DEPARTMENT OF ENERGY

Federal Energy Regulatory Commission

[Docket No. CP10–36–000]

Southern Natural Gas Company; Notice of Intent To Prepare an Environmental Assessment for the Proposed 2011/2012 Abandonment and Replacement Project and Request for Comments on Environmental Issues

February 5, 2010.

The staff of the Federal Energy Regulatory Commission (FERC or Commission) will prepare an environmental assessment (EA) that will discuss the environmental impacts of the Southern 2011/2012 Abandonment and Replacement Project, involving the abandonment and replacement of facilities by Southern Natural Gas Company (Southern) in Louisiana and Mississippi. This EA will be used by the Commission in its decision-making process to determine whether the project is in the public convenience and necessity.

This notice announces the opening of the scoping process the Commission will use to gather input from the public and interested agencies on the project. Your input will help the Commission staff determine what issues need to be evaluated in the EA. Please note that the scoping period will close on March 8, 2010.

This notice is being sent to the Commission's current environmental mailing for this project. State and local government representatives are asked to notify their constituents of this proposed project and encourage them to comment on their areas of concern.

A fact sheet prepared by the FERC entitled "An Interstate Natural Gas Facility On My Land? What Do I Need To Know?" was attached to the project notice Southern provided to landowners. This fact sheet addresses a number of typically-asked questions, including the use of eminent domain and how to participate in the Commission's proceedings. It is also available for viewing on the FERC Web site (*http://www.ferc.gov*).

Summary of the Proposed Project

Southern proposes to abandon, replace, and modify certain pipeline facilities located within East Carroll and West Carroll Parishes, Louisiana, and Issaquena, Sharkey, Yazoo, Madison, Attala, and Winston Counties, Mississippi. Specifically, Southern proposes to abandon in place 68.5 miles (in five segments) of its North Main Loop Line, consisting of 16- to 24-inch-diameter pipeline. To adjust for the abandonment, Southern would also replace and/or modify small segments of its North Main and North Main Loop pipelines. These pipeline segments were installed using a mechanical coupling technology in the late 1930s and early 1940s. The pipeline, consisting of 18- to to 24-inch-diameter pipe, would be cut, cleaned, sealed, and abandoned in place.

Overall, the project would involve 29 separate areas of disturbance along Southern's system in Louisiana and Mississippi. The general location of the project facilities is shown in appendix 1.[1]

Land Requirements for Construction

The proposed project would temporarily disturb about 6.91 acres of land for the abandonment and modification of the facilities. Afterwards, all areas of disturbance would be revegetated and return to its previous use. All pipeline abandonment activities would be conducted within the existing right-of-way and compressor station areas. No new access roads would be required to facilitate the abandonment of the pipeline facilities.

The EA Process

The National Environmental Policy Act (NEPA) requires the Commission to take into account the environmental impacts that could result from an action whenever it considers the issuance of a Certificate of Public Convenience and Necessity. NEPA also requires us[2] to discover and address concerns the public may have about proposals. This process is referred to as "scoping." The main goal of the scoping process is to focus the analysis in the EA on the important environmental issues. By this notice, the Commission requests public comments on the scope of the issues to address in the EA. All comments received will be considered during the preparation of the EA.

In the EA we will discuss impacts that could occur as a result of the proposed project under these general headings:

- Geology and soils;
- Land use;
- Water resources, fisheries, and wetlands;
- Cultural resources;
- Vegetation and wildlife;
- Air quality and noise;
- Endangered and threatened species; and
- Public safety.

We will also evaluate reasonable alternatives to the proposed project or portions of the project, and make recommendations on how to lessen or avoid impacts on the various resource areas.

Our independent analysis of the issues will be presented in the EA. The EA will be placed into the public record and, depending on the comments received during the scoping process, the EA may be published and distributed to the public. A comment period will be allotted if the EA is published for review. We will consider all comments on the EA before we make our recommendations to the Commission. To ensure your comments are considered, please carefully follow the instructions in the Public Participation section below.

With this notice, we are asking agencies with jurisdiction and/or special expertise with respect to environmental issues to formally cooperate with us in the preparation of the EA. These agencies may choose to participate once they have evaluated the proposal relative to their responsibilities. Agencies that would like to request cooperating agency status should follow the instructions for filing comments provided under the Public Participation section of this notice.

Public Participation

You can make a difference by providing us with your specific comments or concerns about the project. Your comments should focus on the potential environmental effects, reasonable alternatives, and measures to avoid or lessen environmental impacts. The more specific your comments, the more useful they will be. To ensure that your comments are timely and properly recorded, please send in your comments so that they will be received in Washington, DC on or before March 8, 2010.

For your convenience, there are three methods which you can use to submit

[1] The appendices referenced in this notice are not being printed in the **Federal Register.** Copies of appendices were sent to all those receiving this notice in the mail and are available at *http://www.ferc.gov* using the link called "eLibrary" or from the Commission's Public Reference Room, 888 First Street, NE., Washington, DC 20426, or call (202) 502–8371. For instructions on connecting to eLibrary, refer to the last page of this notice.

[2] "We," "us," and "our" refer to the environmental staff of the Commission's Office of Energy Projects.

your written comments to the Commission. The Commission encourages electronic filing of comments and has expert eFiling staff available to assist you at 202–502–8258 or *efiling@ferc.gov.*

(1) You may file your comments electronically by using the Quick Comment feature, which is located at *http://www.ferc.gov* under the link called "*Documents and Filings*." A Quick Comment is an easy method for interested persons to submit text-only comments on a project;

(2) You may file your comments electronically by using the "eFiling" feature that is listed under the "*Documents and Filings*" link. eFiling involves preparing your submission in the same manner as you would if filing on paper, and then saving the file on your computer's hard drive. You will attach that file to your submission. New eFiling users must first create an account by clicking on the links called "*Sign up*" or "*eRegister*." You will be asked to select the type of filing you are making. A comment on a particular project is considered a "Comment on a Filing;" or

(3) You may file a paper copy of your comments at the following address: Kimberly D. Bose, Secretary, Federal Energy Regulatory Commission, 888 First Street, NE., Room 1A, Washington, DC 20426.

Environmental Mailing List

The environmental mailing list includes federal, state, and local agencies; elected officials; environmental and public interest groups; Native American tribes; other interested parties; and local libraries and newspapers. This list also includes all affected landowners (as defined in the Commission's regulations) who are potential right-of-way grantors, whose property may be used temporarily for project purposes, or who own homes within certain distances of aboveground facilities, and anyone who submits comments on the project. We will update the environmental mailing list as the analysis proceeds to ensure that we send the information related to this environmental review to all individuals, organizations, and government entities interested in and/or potentially affected by the proposed project.

If the EA is published for distribution, copies will be sent to the environmental mailing list for public review and comment. If the EA is published for distribution, copies will be sent to the environmental mailing list for public review and comment. If you would prefer to receive a paper copy of the document instead of the CD version or would like to remove your name from the mailing list, please return the attached Information Request (appendix 2).

Becoming an Intervenor

In addition to involvement in the EA scoping process, you may want to become an "intervenor," which is an official party to the Commission's proceeding. Intervenors play a more formal role in the process and are able to file briefs, appear at hearings, and be heard by the courts if they choose to appeal the Commission's final ruling. An intervenor formally participates in the proceeding by filing a request to intervene. Instructions for becoming an intervenor are included in the User's Guide under the "e-filing" link on the Commission's Web site.

Additional Information

Additional information about the project is available from the Commission's Office of External Affairs, at 1–866–208–FERC, or on the FERC Web site at *http://www.ferc.gov* using the "eLibrary" link. Click on the eLibrary link, click on "General Search" and enter the docket number, excluding the last three digits, in the Docket Number field (*i.e.,* CP10–36). Be sure you have selected an appropriate date range. For assistance, please contact FERC Online Support at *FercOnlineSupport@ferc.gov* or toll free at 1–866–208–3676, or for TTY, contact (202) 502–8659. The eLibrary link also provides access to the texts of formal documents issued by the Commission, such as orders, notices, and rulemakings.

In addition, the Commission offers a free service called eSubscription which allows you to keep track of all formal issuances and submittals in specific dockets. This can reduce the amount of time you spend researching proceedings by automatically providing you with notification of these filings, document summaries and direct links to the documents. Go to *http://www.ferc.gov/esubscribenow.htm.*

Finally, public meetings or site visits will be posted on the Commission's calendar located at *http://www.ferc.gov/EventCalendar/EventsList.aspx* along with other related information.

Kimberly D. Bose,

Secretary.

[FR Doc. 2010–3108 Filed 2–18–10; 8:45 am]

BILLING CODE 6717–01–P

DEPARTMENT OF ENERGY

Federal Energy Regulatory Commission

[Docket No. EL10–39–000]

SunZia Transmission, LLC; Notice of Filing

February 5, 2010.

Take notice that on January 29, 2010, SunZia Transmission, LLC (SunZia) filed a petition for declaratory order pursuant to Rule 207(a)(2) of the Commission's Rules of Practice and Procedure, 18 CFR 385.207(a)(2) (2009), requesting that the Commission declare that: (i) Each investor in SunZia may be allocated firm transmission rights representing 100% of the sponsor's pro rata investment in the transmission capacity of the SunZia Southwest Transmission Project; (ii) three sponsors of the project, South Western Power Group (SWPG), ECP SunZia, LLC (ECP), and Shell WindEnergy Inc. (SWE), each an owner of membership interest in SunZia, may use up to 100% of their pro rata share of capacity on the project to serve affiliated generators; and (iii) SWPG and ECP SunZia may prescribe up to 100% of their 80% pro rata share of the project transmission capacity through long-term firm negotiated rate contracts.

Any person desiring to intervene or to protest this filing must file in accordance with Rules 211 and 214 of the Commission's Rules of Practice and Procedure (18 CFR 385.211, 385.214). Protests will be considered by the Commission in determining the appropriate action to be taken, but will not serve to make protestants parties to the proceeding. Any person wishing to become a party must file a notice of intervention or motion to intervene, as appropriate. Such notices, motions, or protests must be filed on or before the comment date. On or before the comment date, it is not necessary to serve motions to intervene or protests on persons other than the Applicant.

The Commission encourages electronic submission of protests and interventions in lieu of paper using the "eFiling" link at *http://www.ferc.gov.* Persons unable to file electronically should submit an original and 14 copies of the protest or intervention to the Federal Energy Regulatory Commission, 888 First Street, NE., Washington, DC 20426.

This filing is accessible on-line at *http://www.ferc.gov,* using the "eLibrary" link and is available for review in the Commission's Public Reference Room in Washington, DC. There is an "eSubscription" link on the

Web site that enables subscribers to receive e-mail notification when a document is added to a subscribed docket(s). For assistance with any FERC Online service, please e-mail *FERCOnlineSupport@ferc.gov,* or call (866) 208–3676 (toll free). For TTY, call (202) 502–8659.

Comment Date: 5 p.m. Eastern Time on February 19, 2010.

Kimberly D. Bose,

Secretary.

[FR Doc. 2010–3104 Filed 2–18–10; 8:45 am]

BILLING CODE 6717–01–P

DEPARTMENT OF ENERGY

Federal Energy Regulatory Commission

[Docket No. CP10–47–000]

CenterPoint Energy Gas Transmission Company; Prior Notice of Activity Under Blanket Certificate

February 3, 2010.

On January 26, 2010 CenterPoint Energy Gas Transmission Company (CEGT) filed a prior notice request pursuant to sections 157.205, 157.208 and 157.210 of the Federal Energy Regulatory Commission's (Commission) regulations under the Natural Gas Act, and CEGT's certificate issued September 1, 1982, as amended February 10, 1983, in Docket Nos. CP82–384–000 and CP82–384–001. CEGT requests authorization to construct a new compressor station near the town of Alto in Richland Parish, Louisiana, all as more fully described in the application that is available for public inspection.

Any questions regarding the application should be directed to Michelle Willis, Manager, Regulatory & Compliance, CenterPoint Energy Gas Transmission Company, P.O. Box 21734, Shreveport, Louisiana 71151, or by calling (318) 429–3708.

Any person or the Commission's staff may, within 60 days after issuance of the instant notice by the Commission, file pursuant to Rule 214 of the Commission's Procedural Rules (18 CFR 385.214) a motion to intervene or notice of intervention and pursuant to section 157.205 of the regulations under the NGA (18 CFR 157.205), a protest to the request. If no protest is filed within the time allowed therefor, the proposed activity shall be deemed to be authorized effective the day after the time allowed for filing a protest. If a protest is filed and not withdrawn within 30 days after the allowed time for filing a protest, the instant request shall be treated as an application for authorization pursuant to section 7 of the NGA.

Protests will be considered by the Commission in determining the appropriate action to be taken, but will not serve to make protestants parties to the proceeding. Any person wishing to become a party must file a notice of intervention or motion to intervene, as appropriate. Such motions or protests must be filed on or before the comment date. Anyone filing a motion to intervene or protest must serve a copy of that document on the Applicant, on or before the comment date. It is not necessary to serve motions to intervene or protests on persons other than the Applicant.

The Commission encourages electronic submission of comments, protests and interventions in lieu of paper using the "eFiling" link at *http://www.ferc.gov.* Persons unable to file electronically should submit an original and 14 copies of the intervention or protest to the Federal Energy Regulatory Commission, 888 First Street, NE., Washington, DC 20426.

This filing is accessible on-line at *http://www.ferc.gov,* using the "eLibrary" link and is available for review in the Commission's Public Reference Room in Washington, DC. There is an "eSubscription" link on the Web site that enables subscribers to receive e-mail notification when a document is added to a subscribed docket(s). For assistance with any FERC Online service, please e-mail *FERCOnlineSupport@ferc.gov,* or call (866) 208–3676 (toll free). For TTY, call (202) 502–8659.

Kimberly D. Bose,

Secretary.

[FR Doc. 2010–3098 Filed 2–18–10; 8:45 am]

BILLING CODE 6717–01–P

ENVIRONMENTAL PROTECTION AGENCY

[EPA–R04–OAR–2010–0019; FRL–9114–2]

Adequacy Status of the North Carolina Portion of the Charlotte-Gastonia-Rock Hill Bi-State Area Reasonable Further Progress Plan 8-Hour Ozone Sub-Area Motor Vehicle Emission Budgets for Transportation Conformity Purposes

AGENCY: Environmental Protection Agency (EPA).

ACTION: Notice of Adequacy.

SUMMARY: EPA is notifying the public that it has found that the sub-area motor vehicle emissions budgets (MVEBs) for the North Carolina portion of the Charlotte-Gastonia-Rock Hill bi-state area (hereafter referred to as the Charlotte bi-state area) in the 1997 8-Hour Ozone Reasonable Further Progress (RFP) plan, submitted on November 30, 2009, by the North Carolina Department of Air Quality (NC DAQ), are adequate for transportation conformity purposes. The bi-state Charlotte moderate 1997 8-hour ozone area is comprised of Charlotte-Gastonia in North Carolina; and Rock Hill (a portion of York County), South Carolina. The North Carolina portion of the Charlotte bi-state area is comprised of the following sub-areas or counties: Cabarrus, Gaston, partial of Iredell (Davidson and Coddle Creek Townships), Lincoln, Mecklenburg, Rowan, and Union. North Carolina's RFP plan includes the required MVEBs for volatile organic compounds (VOC), and voluntary MVEBs for nitrogen oxides (NO_X). This action relates only to the North Carolina portion of the Charlotte bi-state area. EPA is considering South Carolina's RFP for the applicable portion of York County in a separate action. As a result of EPA's finding, which is being announced in this notice, the North Carolina portion of the Charlotte bi-state area must use the sub-area MVEBs for future conformity determinations for the 1997 8-hour ozone standard.

DATES: These sub-area MVEBs are effective March 8, 2010.

FOR FURTHER INFORMATION CONTACT: Dianna Smith, U.S. Environmental Protection Agency, Region 4, Air Planning Branch, 61 Forsyth Street, SW., Atlanta, Georgia 30303. Ms. Smith can also be reached by telephone at (404) 562–9207, or via electronic mail at *smith.dianna@epa.gov.* The finding is available at EPA's conformity Web site: *http://www.epa.gov/otaq/stateresources/transconf/currsips.htm.*

SUPPLEMENTARY INFORMATION: This notice is simply an announcement of a finding that EPA has already made. EPA Region 4 sent a letter to NC DAQ on January 12, 2010, stating that the sub-area MVEBs identified for the North Carolina portion of the Charlotte bi-state area in the 1997 8-hour ozone RFP plan, submitted on November 30, 2009, are adequate and must be used for transportation conformity determinations in the North Carolina portion of the Charlotte bi-state area.

EPA posted the availability of the sub-area MVEBs contained in the North Carolina RFP plan on EPA's Web site on December 3, 2009, as part of the adequacy process, for the purpose of soliciting comments. EPA's adequacy comment period ran from December 3,

2009, through January 3, 2010. During EPA's adequacy comment period, no adverse comments were received on the MVEBs for North Carolina portion of the Charlotte bi-state area. Through this notice, EPA is informing the public that these sub-area MVEBs are adequate for transportation conformity. This finding has also been announced on EPA's conformity Web site: *http://www.epa.gov/otaq/stateresources/transconf/pastsips.htm.* The adequate sub-area MVEBs are provided in the following table:

CHARLOTTE (NORTH CAROLINA PORTION) 8-HOUR OZONE MVEBS

[kilograms/day]

County	VOC	NO_x
2008 Sub-Area MVEBS		
Cabarrus	6,941	7,324
Gaston	5,132	7,647
Iredell*	3,601	5,637
Lincoln	2,726	2,948
Mecklenburg	26,368	34,526
Rowan	6,149	7,193
Union	6,299	5,660

*Iredell County MVEB for nonattainment area only.

Transportation conformity is required by section 176(c) of the Clean Air Act. EPA's conformity rule, 40 CFR Part 93, requires that transportation plans, programs and projects conform to state air quality implementation plans and establishes the criteria and procedures for determining whether or not they do so. Conformity to a state implementation plan (SIP) means that transportation activities will not produce new air quality violations, worsen existing violations, or delay timely attainment of the national ambient air quality standards.

The criteria by which EPA determines whether a SIP's MVEBs are adequate for transportation conformity purposes are outlined in 40 CFR 93.118(e)(4). EPA has also described the process for determining the adequacy of submitted SIP budgets in a July 1, 2004, final rulemaking entitled, "Transportation Conformity Rule Amendments for the New 8-hour Ozone and $PM_{2.5}$ National Ambient Air Quality Standards and Miscellaneous Revisions for Existing Areas; Transportation Conformity Rule Amendments: Response to Court Decision and Additional Rule Changes" (69 FR 40004). Please note that an adequacy review is separate from EPA's completeness review, and it should not be used to prejudge EPA's ultimate approval of the RFP plan for the North Carolina portion of the Charlotte bi-state area. Even if EPA finds a budget adequate, the RFP plan submittal could later be disapproved.

Within 24 months from the effective date of this notice, the transportation partners will need to demonstrate conformity to the new MVEBs, if the demonstration has not already been made, pursuant to 40 CFR 93.104(e). See, 73 FR 4419 (January 24, 2008).

Authority: 42 U.S.C. 7401 *et seq.*

Dated: February 3, 2010.

A. Stanley Meiburg,

Acting Regional Administrator, Region 4.

[FR Doc. 2010–3239 Filed 2–18–10; 8:45 am]

BILLING CODE 6560–50–P

ENVIRONMENTAL PROTECTION AGENCY

[EPA–HQ–OW–2003–0064, FRL–9113–9; EPA ICR 1287.10, OMB Control Number 2040–0101]

Agency Information Collection Activity; Proposed Collection; Comment Request; Information Collection Request for Application for Sustainable Water Leadership Program

AGENCY: Environmental Protection Agency (EPA).

ACTION: Notice.

SUMMARY: In compliance with the Paperwork Reduction Act (PRA) (44 U.S.C. 3501 *et seq.*), this document announces that EPA is planning to submit a request to update an existing approved Information Collection Request (ICR) to the Office of Management and Budget (OMB). Before submitting the ICR to OMB for review and approval, EPA is soliciting comments on specific aspects of the proposed information collection as described below.

DATES: Comments must be submitted on or before April 20, 2010.

ADDRESSES: Submit your comments, referencing docket ID number EPA–HQ–OW–2003–0064, by one of the following methods:

- *http://www.regulations.gov:* Follow the online instructions for submitting comments.
- *E-mail: ow-docket@epa.gov* (Identify Docket ID number EPA–HQ–OW–2003–0064, in the subject line)
- *Mail:* Water Docket, Environmental Protection Agency, Mailcode: 4203M, 1200 Pennsylvania Ave., NW., Washington, DC 20460. Please include a total of three copies.
- *Hand Delivery:* EPA Docket Center, EPA West, Room 3334, 1301 Constitution Avenue, NW., Washington, DC. Such deliveries are only accepted during the Docket's normal hours of operation, and special arrangements should be made for deliveries of boxed information.

Instructions: Direct your comments identified by the Docket ID number EPA–HQ–OW–2003–0064. EPA's policy is that all comments received will be included in the public docket without change and may be made available online at *www.regulations.gov,* including any personal information provided, unless the comment includes information claimed to be Confidential Business Information (CBI) or other information whose disclosure is restricted by statute. Do not submit information that you consider to be CBI or otherwise protected through *http://www.regulations.gov* or e-mail. The *http://www.regulations.gov* Web site is an "anonymous access" system, which means EPA will not know your identity or contact information unless you provide it in the body of your comment. If you send an e-mail comment directly to EPA without going through *http://www.regulations.gov,* your e-mail address will be automatically captured and included as part of the comment that is placed in the public docket and made available on the Internet. If you submit an electronic comment, EPA recommends that you include your name and other contact information in the body of your comment and with any disk or CD–ROM you submit. If EPA cannot read your comment due to technical difficulties and cannot contact you for clarification, EPA may not be able to consider your comment. Electronic files should avoid the use of special characters, any form of encryption, and be free of any defects or viruses. For additional information about EPA's public docket, visit the EPA Docket Center homepage at *http://www.epa.gov/epahome/dockets.htm.*

FOR FURTHER INFORMATION CONTACT: Gregory Gwaltney, Municipal Support Division, Office of Wastewater Management, OWM Mail Code: 4204M, Environmental Protection Agency, Room 7111—EPA East, 1200 Pennsylvania Ave., NW., Washington, DC 20460; telephone number: (202) 564–2340; e-mail address: *gwaltney.gregory@epa.gov.*

SUPPLEMENTARY INFORMATION:

How Can I Access the Docket and/or Submit Comments?

EPA has established a public docket for the ICR identified in this document (ID number EPA–HQ–OW–2003–0064), which is available for online viewing at *http://www.regulations.gov,* or in person viewing at the Water Docket in the EPA Docket Center (EPA/DC), EPA West,

Room 3334, 1301 Constitution Ave., NW., Washington, DC. The EPA/DC Public Reading Room is open from 8 a.m. to 4:30 p.m., Monday through Friday, excluding legal holidays. The telephone number for the Reading Room is 202–566–1744, and the telephone number for the Water Docket is 202–566–2426.

Use *http://www.regulations.gov* to obtain a copy of the draft collection of information, submit or view public comments, access the index listing of the contents of the docket, and to access those documents in the public docket that are available electronically. Once in the system, select "search," then key in the docket ID number identified in this document.

What Information Is EPA Particularly Interested In?

Pursuant to section 3506(c)(2)(A) of the PRA, EPA specifically solicits comments and information to enable it to:

(i) Evaluate whether the proposed collection of information is necessary for the proper performance of the functions of the Agency, including whether the information will have practical utility;

(ii) Evaluate the accuracy of the Agency's estimate of the burden of the proposed collection of information, including the validity of the methodology and assumptions used;

(iii) Enhance the quality, utility, and clarity of the information to be collected; and

(iv) Minimize the burden of the collection of information on those who are to respond, including through the use of appropriate automated electronic, mechanical, or other technological collection techniques or other forms of information technology, *e.g.,* permitting electronic submission of responses. In particular, EPA is requesting comments from very small businesses (those that employ less than 25) on examples of specific additional efforts that EPA could make to reduce the paperwork burden for very small businesses affected by this collection.

What Should I Consider When I Prepare My Comments for EPA?

You may find the following suggestions helpful for preparing your comments:

1. Explain your views as clearly as possible and provide specific examples.
2. Describe any assumptions that you used.
3. Provide copies of technical information/data you used that support your views.
4. If you estimate potential burden or costs, explain how you arrived at the estimate that you provide.
5. Offer alternative ways to improve the collection activity.
6. Make sure to submit your comments by the deadline identified under DATES.
7. To ensure proper receipt by EPA, be sure to identify the docket ID number assigned to this action in the subject line on the first page of your response. You may also provide the name, date, and **Federal Register** citation.

What Information Collection Activity or ICR Does This Apply To?

Affected entities: Entities potentially affected by this action are publicly or privately owned wastewater treatment plants or systems, community drinking water plants or systems, managed decentralized systems (public or private), municipally-owned stormwater systems, and municipalities.

Title: Application for Sustainable Water Leadership Program (formerly named the Annual National Clean Water Act Recognition Awards Program).

ICR numbers: EPA ICR No. 1287.10 OMB Control No. 2040–0101.

ICR status: This ICR is currently scheduled to expire on February 28, 2011. An Agency may not conduct or sponsor, and a person is not required to respond to, a collection of information, unless it displays a currently valid OMB control number. The OMB control numbers for EPA's regulations in title 40 of the CFR, after appearing in the **Federal Register** when approved, are listed in 40 CFR Part 9, and displayed either by publication in the **Federal Register** or by other appropriate means, such as on the related collection instrument or form, if applicable. The display of OMB control numbers in certain EPA regulations is consolidated in 40 CFR Part 9.

Abstract: This notice requests approval for modifications to the application used to collect data for EPA's National Clean Water Act Recognition Awards Program. The voluntary Program has been updated to reflect new industry practices consistent with EPA's sustainable infrastructure initiatives and is now called the Sustainable Water Leadership Program. The Sustainable Water Leadership Program maintains elements from the previous Clean Water Act Recognition Awards Program, namely, excellence in operations and maintenance, biosolids, combined sewer overflows, pretreatment, and storm water management, and also expands eligibility to community drinking water utilities and systems, as well as managed decentralized treatment systems (public or private). As described below, the development of the Sustainable Water Leadership Program is the latest evolution in EPA's commitment to recognize and award outstanding and innovative utility management practices.

In 1985, EPA established the Operations and Maintenance (O&M) awards program to provide a positive incentive for compliance with the National Pollutant Discharge Elimination System (NPDES). Because of the successes of the O&M Awards program, in 1988 EPA amended the Clean Water Act Recognition Awards Program to include the Beneficial Biosolids Use awards (formerly Sludge awards). In 1989, the Pretreatment awards were added. In 1990, EPA established the Combined Sewer Overflow (CSO) and Storm Water (SW) Management awards programs which were also added to the Clean Water Act Recognition Awards Program.

The Sustainable Water Leadership Program consists of two components: (1) A recognition program that recognizes applicants that are moving toward sustainable operations and meet specified criteria identified in the application, and (2) A competitive awards program to showcase the "best of the best" in a specific topic area selected in advance by EPA. Today's notice and request focuses on the recognition component, the awards component is still under development. An update to this ICR will be provided following finalization of the awards component. The recognition component requires that an applicant meet criteria under specific categories. One category is mandatory for all applicants, Effective Utility Management, and is based on the *Attributes of Effectively Managed Systems* that EPA and the water sector have endorsed. In addition, applicants are asked to describe activities in other areas of their choice including: biosolids, pretreatment, decentralized systems, energy management, water efficiency, climate change adaptation and or mitigation, and watershed approaches, including source water protection and storm water.

The updated application addresses the recognition component of the Sustainable Water Leadership Program and provides the mechanism for the applicants to demonstrate how they meet the required criteria.

This notice also requests approval to consolidate the pretreatment component of the recognition awards program into this ICR. Currently, the Pretreatment awards program is covered by ICR (OMB Control No. 2040–0009, EPA ICR No.

0002.14), approved through December 31, 2011. A framework to implement the awards recognition program is at 40 CFR part 105.

The respondent will read the instructions for completing the recognition application for the Sustainable Water Leadership Program. The respondent will use existing files, planning and progress reports, and institutional memory to complete the application. Based on the instructions provided with the application, the respondent will compile the requested information. The requested design and operating information should be readily available from wastewater/drinking water/storm water treatment facility, or pollution abatement program operating records. The data collection may include flow, permit, operating and environmental data.

The information collection will be used by the Office of Water, Office of Wastewater Management, to evaluate and determine if required criteria are met for recognition. Based on the collection, national panels will evaluate the applicant's efforts and recommend finalists. Recognized entities will receive a letter and certificate signed by the EPA Administrator or Assistant Administrator for Water, their utility name on EPA and outside organization Web sites, and announcements of their recognition at national conferences. EPA Regions may also opt to hold Regional ceremonies.

Burden Statement: The total number of respondents for the recognition program is estimated to be 2,036 (includes 530 respondents in Year 1 of the Program and 1,507 in Year 3) with a total annual average of 679. The responses are collected every other year. The respondents reporting burden of 20 person hours per response is estimated to be 40,723 hours and a cost of $1.8 million. Total estimated annual burden for this collection is 13,574 hours and $614,919 (all labor cost). For additional details on the estimated burden, please see docket ID number EPA–HQ–OW–2003–0064. Burden means the total time, effort, or financial resources expended by persons to generate, maintain, or disclose or provide information to or for a Federal agency. This includes the time needed to review instructions; develop, acquire, install, and use technology and systems for the purposes of collecting, validating, and verifying information, processing and maintaining information, and disclosing and providing information; adjust the existing ways to comply with any previously applicable instructions and requirements; train personnel to be able to respond to a collection of information; search data sources; complete and review the collection of information; and transmit or otherwise disclose information. The ICR provides a detailed explanation of the Agency's estimate, which is only briefly summarized here:

Estimated total number of potential respondents: 679.

Frequency of response: Biennial

Estimated total average number of responses for each respondent: 1.

Estimated total annual burden hours: 13,574 hours.

Estimated total annual costs: $614,919. This includes an estimated burden cost of $614,919 and an estimated cost of $0 for capital investment or maintenance and operational costs.

Changes in the Estimates: There is an increase of 12,414 hours in the total estimated respondent burden compared with that identified in the ICR currently approved by OMB. This change is primarily the result of (1) changes and adjustments in the number and types of applicants eligible for recognition under the Sustainable Water Leadership Program. The new Sustainable Water Leadership Program expands the universe of eligible entities to include community drinking water utilities and systems, as well as managed decentralized treatment systems (public or private). (2) EPA updated the estimated time spent by respondents to complete the revised Recognition Application for Sustainable Water Leadership Program to 20 hours per respondent. (3) The ICR now includes the applicant respondent burden consolidated from the Pretreatment ICR (OMB Control No. 2040–0009, EPA ICR No. 0002.14), which was previous included in only the Pretreatment ICR and not this ICR.

What Is the Next Step in the Process for This ICR?

EPA will consider the comments received and amend the ICR as appropriate. The final ICR package will then be submitted to OMB for review and approval pursuant to 5 CFR 1320.12. At that time, EPA will issue another **Federal Register** notice pursuant to 5 CFR 1320.5(a)(1)(iv) to announce the submission of the ICR to OMB and the opportunity to submit additional comments to OMB. If you have any questions about this ICR or the approval process, please contact the technical person listed under **FOR FURTHER INFORMATION CONTACT**.

Dated: February 4, 2010.

James A. Hanlon,

Director, Office of Wastewater Management.

[FR Doc. 2010–3254 Filed 2–18–10; 8:45 am]

BILLING CODE 6560–50–P

ENVIRONMENTAL PROTECTION AGENCY

[FRL–9113–7; Docket ID No. EPA–HQ–ORD–2010–0123]

Draft Toxicological Review of Inorganic Arsenic: In Support of the Summary Information on the Integrated Risk Information System (IRIS)

AGENCY: Environmental Protection Agency (EPA).

ACTION: Notice of public comment period.

SUMMARY: EPA is announcing a 60-day public comment period for the 2010 draft document titled, "Toxicological Review of Inorganic Arsenic: In Support of the Summary Information on the Integrated Risk Information System (IRIS)" (EPA/635/R–10/001). The draft document was prepared by the National Center for Environmental Assessment (NCEA) within the EPA's Office of Research and Development (ORD). The Toxicological Review of Inorganic Arsenic was submitted to the EPA's Science Advisory Board (SAB) for external peer review in 2005. The SAB completed its review and submitted its final report to the EPA Administrator in June 2007 (*see* EPA–SAB–07–008 at *www.epa.gov/sab*). EPA revised the Toxicological Review in response to the SAB comments. A detailed account of the SAB (2007) recommendations and EPA's response is provided in Appendix A of the 2010 draft Toxicological Review of Inorganic Arsenic.

EPA has now submitted the 2010 draft Toxicological Review to the SAB for a focused peer review of EPA's responses to key SAB (2007) recommendations. EPA is also seeking a focused review by the public on EPA's interpretation and implementation of key SAB (2007) external peer review recommendations. The public comment period and SAB review are separate processes that provide opportunities for all interested parties to comment on the document. SAB's peer review meeting will be announced in a separate **Federal Register** notice. EPA intends to forward the public comments that are submitted in accordance with this notice to the SAB peer review panel prior to the meeting for their consideration. However, because of the timing of the SAB's peer review meeting, EPA can

only guarantee that those comments submitted by March 26, 2010, in response to this **Federal Register** notice will be provided to the SAB panel prior to the SAB meeting. Comments received after March 26 will still be provided to the SAB panel and will inform the Agency's revision of the draft assessment, but EPA cannot guarantee that the panel will have them prior to the peer review meeting. In addition, EPA cannot grant any requests for an extension of the comment period because of the scheduled SAB peer review meeting. When finalizing the Toxicological Review of Inorganic Arsenic, EPA intends to consider any public comments that EPA receives in accordance with this notice.

EPA is releasing this draft document solely for the purpose of pre-dissemination peer review under applicable information quality guidelines. This document has not been formally disseminated by EPA. It does not represent and should not be construed to represent any Agency policy or determination.

DATES: The public comment period begins February 19, 2010, and ends April 20, 2010. Comments should be in writing and must be received by EPA by April 20, 2010.

EPA can only guarantee that those comments submitted by March 26, 2010, in response to this **Federal Register** notice will be provided to the SAB panel prior to the SAB meeting. Comments received after March 26 will still be provided to the SAB panel and will inform the Agency's revision of the draft assessment, but EPA cannot guarantee that the panel will have them prior to the peer review meeting.

ADDRESSES: The draft "Toxicological Review of Inorganic Arsenic: In Support of the Summary Information on the Integrated Risk Information System (IRIS)" is available primarily via the Internet on the NCEA home page under the Recent Additions and Publications menus at *http://www.epa.gov/ncea.* A limited number of paper copies are available from the Information Management Team (*Address:* Information Management Team, National Center for Environmental Assessment (*Mail Code:* 8601P), U.S. Environmental Protection Agency, 1200 Pennsylvania Avenue, NW., Washington, DC 20460; *telephone:* 703–347–8561; *facsimile:* 703–347–8691). If you are requesting a paper copy, please provide your name, mailing address, and the document title.

Comments may be submitted electronically via *http://www.regulations.gov,* by e-mail, by mail, by facsimile, or by hand delivery/courier. Please follow the detailed instructions provided in the **SUPPLEMENTARY INFORMATION** section of this notice.

FOR FURTHER INFORMATION CONTACT: For information on submitting comments to the docket, please contact the Office of Environmental Information (OEI) Docket (Mail Code: 2822T), U.S. Environmental Protection Agency, 1200 Pennsylvania Ave., NW., Washington, DC 20460; *telephone:* 202–566–1752; *facsimile:* 202–566–1753; or *e-mail: ORD.Docket@epa.gov.*

If you have questions about the document, please contact Reeder Sams, National Center for Environmental Assessment (NCEA), U.S. EPA, 109 T.W. Alexander Drive, B243–01, Durham, NC 27711; *telephone:* 919–541–0661; *facsimile:* 919–541–0245; or *e-mail: sams.reeder@epa.gov.*

SUPPLEMENTARY INFORMATION:

I. Information About IRIS

IRIS is a human health assessment program that evaluates quantitative and qualitative risk information on effects that may result from exposure to specific chemical substances found in the environment. Through the IRIS Program, EPA provides the highest quality science-based human health assessments to support the Agency's regulatory activities. The IRIS database contains information for more than 540 chemical substances that can be used to support the first two steps (hazard identification and dose-response evaluation) of the risk assessment process. When supported by available data, IRIS provides oral reference doses (RfDs) and inhalation reference concentrations (RfCs) for chronic noncancer health effects, and oral slope factors and inhalation unit risks for carcinogenic effects. Combined with specific exposure information, government and private entities use IRIS to help characterize public health risks of chemical substances in a site-specific situation and thereby support risk management decisions designed to protect public health.

II. How To Submit Comments to the Docket at http://www.regulations.gov

Submit your comments, identified by Docket ID No. EPA–HQ–ORD–2010–0123, by one of the following methods:

- *http://www.regulations.gov:* Follow the on-line instructions for submitting comments.
- *E-mail: ORD.Docket@epa.gov.*
- *Facsimile:* 202–566–1753.
- *Mail:* Office of Environmental Information (OEI) Docket (Mail Code: 2822T), U.S. Environmental Protection Agency, 1200 Pennsylvania Ave., NW., Washington, DC 20460. The telephone number is 202–566–1752. If you provide comments by mail, please submit one unbound original with pages numbered consecutively, and three copies of the comments. For attachments, provide an index, number pages consecutively with the comments, and submit an unbound original and three copies.
- *Hand Delivery:* The OEI Docket is located in the EPA Headquarters Docket Center, EPA West Building, Room 3334, 1301 Constitution Ave., NW., Washington, DC. The EPA Docket Center's Public Reading Room is open from 8:30 a.m. to 4:30 p.m., Monday through Friday, excluding legal holidays. The telephone number for the Public Reading Room is 202–566–1744. Deliveries are only accepted during the docket's normal hours of operation, and special arrangements should be made for deliveries of boxed information. If you provide comments by hand delivery, please submit one unbound original with pages numbered consecutively, and three copies of the comments. For attachments, provide an index, number pages consecutively with the comments, and submit an unbound original and three copies.

EPA recommends that you include your name and other contact information in the body of your comment and with any disk or CD–ROM you submit. If EPA cannot read your comment and cannot contact you for clarification, EPA may not be able to consider your comment.

Instructions: Direct your comments to Docket ID No. EPA–HQ–ORD–2010–0123. Please ensure that your comments are submitted within the specified comment period. Comments received after the closing date will be marked "late," and may only be considered if time permits. It is EPA's policy to include all comments it receives in the public docket without change and to make the comments available online at *http://www.regulations.gov,* including any personal information provided, unless a comment includes information claimed to be Confidential Business Information (CBI) or other information whose disclosure is restricted by statute. Do not submit information that you consider to be CBI or otherwise protected through *http://www.regulations.gov* or e-mail. The *http://www.regulations.gov* Web site is an "anonymous access" system, which means EPA will not know your identity or contact information unless you provide it in the body of your comment. If you send an e-mail comment directly to EPA without going through *http://*

www.regulations.gov, your e-mail address will be automatically captured and included as part of the comment that is placed in the public docket and made available on the Internet. If you submit an electronic comment, EPA recommends that you include your name and other contact information in the body of your comment and with any disk or CD–ROM you submit. If EPA cannot read your comment due to technical difficulties and cannot contact you for clarification, EPA may not be able to consider your comment. Electronic files should avoid the use of special characters and any form of encryption and be free of any defects or viruses. For additional information about EPA's public docket visit the EPA Docket Center homepage at *http://www.epa.gov/epahome/dockets.htm.*

Docket: All documents in the docket are listed in the *http://www.regulations.gov* index. Although listed in the index, some information is not publicly available, e.g., CBI or other information whose disclosure is restricted by statute. Certain other material, such as copyrighted material, will be publicly available only in hard copy. Publicly available docket materials are available either electronically in *http://www.regulations.gov* or in hard copy at the OEI Docket in the EPA Headquarters Docket Center.

Dated: February 12, 2010.

Rebecca Clark,

Director, National Center for Environmental Assessment.

[FR Doc. 2010–3240 Filed 2–18–10; 8:45 am]

BILLING CODE 6560–50–P

ENVIRONMENTAL PROTECTION AGENCY

[ER–FRL–8988–2]

Environmental Impact Statements; Notice of Availability

Responsible Agency: Office of Federal Activities, General Information (202) 564–1399 or *http://www.epa.gov/compliance/nepa/.*

Weekly Receipt of Environmental Impact Statements

Filed 02/01/2010 through 02/12/2010. Pursuant to 40 CFR 1506.9.

Notice

In accordance with Section 309(a) of the Clean Air Act, EPA is required to make its comments on EISs issued by other Federal agencies public. Historically, EPA has met this mandate by publishing weekly notices of availability of EPA comments, which includes a brief summary of EPA's comment letters, in the **Federal Register.** Since February 2008, EPA has been including its comment letters on EISs on its Web site at: *http://www.epa.gov/compliance/nepa/eisdata.html.* Including the entire EIS comment letters on the Web site satisfies the Section 309(a) requirement to make EPA's comments on EISs available to the public. Accordingly, after March 31, 2010, EPA will discontinue the publication of this notice of availability of EPA comments in the **Federal Register.**

Federal Offices in Washington, DC, were closed because of inclement weather from February 8–11, 2010. Accordingly the Notice of Availability for the Weekly Receipt of Environmental Impact Statements filed 02/01/2010 through 02/05/2010 was not published in the **Federal Register** on February 12, 2010.

EIS No. 20100033, Draft EIS, BLM, CA Chevron Energy Solutions Lucerne Valley Solar Project, Proposing To Develop a 45-megawatt (MW) Solar Photovoltaic (PV) Plant and Associated Facilities on 516 Acres of Federal Land Managed, California Desert Conservation Area Plan Amendment, San Bernardino County, CA, Comment Period Ends: 05/19/2010, Contact: Greg Thomsen 951–697–5237.

EIS No. 20100034, Final EIS, USFWS, CA, Hatchery and Stocking Program. Operation of 14 Trout Hatcheries and the Mad River Hatchery for the Anadromous Steelhead, Federal Funding, California Department of Fish and Game, CA, Wait Period Ends: 03/22/2010, Contact: Bart Prose 916–978–6152.

EIS No. 20100035, Draft EIS, USACE, TX, Lake Columbia Regional Water Supply Reservoir Project, Proposes to Construct, Operate and Maintain a Dam and Reservoir, Mud Creek, Angelina River, Cherokee and Smith Counties, TX, Comment Period Ends: 04/05/2010, Contact: Brent Jasper 817–886–1733.

EIS No. 20100036, Final EIS, BR, CA, New Melones Lakes Area Resource Management Plan, Implementation, Tuolumne and Calaveras Counties, CA, Wait Period Ends: 03/22/2010, Contact: Melissa Vignau 916–989–7182.

EIS No. 20100037, Second Draft Supplement, USFS, 00, Sierra Nevada Forest Plan Amendment, Proposes to Provide an Objective Comparison of all of the Alternatives for 2004 Final EIS, Amending Land and Resource Management Plans, Modoc, Lasser, Plumas, Tahoe, Eldorado, Stanislaus, Sequoia, Sierra, Inyo and Humboldt-Toiyabe National Forests, and the Lake Tahoe Basin Management Unit, Several Counties, CA and NV, Comment Period Ends: 04/05/2010, Contact: Randy Moore 707–562–8737.

EIS No. 20100038, Draft Supplement, FSA, 00, PROGRAMMATIC—Conservation Reserve Program (CRP), Implement Certain Changes to the CRP as Enacted by Congress in the 2008 Farm Bill, in the United States, Comment Period Ends: 04/05/2010, Contact: Mathhew T. Ponish 202–720–6853.

EIS No. 20100039, Final EIS, WAPA, 00, ADOPTION—Southwest Intertie Project, Construction and Operation, 500kV Transmission Line from the existing Midpoint substation near Shoshone, ID to a new substation site in the Dry Lake Valley of Las Vegas, NV area to a point near Delta, UT, Permits Approval and C, Wait Period Ends: 03/22/2010, Contact: Mathew Blevins 720–962–7621. U.S. DOE/WAPA has adopted the BLM's FEIS #19930233, filed 07/09/1993. WAPA was not a Cooperating Agency for the above FEIS. Accordingly, recirculation of the document is necessary under Section 1506.3(b) of the CEQ Regulations.

EIS No. 20100040, Draft EIS, NRC, IA, GENERIC—License Renewal of Nuclear Plants (GEIS) Regarding Duane Arnold Energy Center, Supplement 42 to NUREG–1437, near the Town of Palo, Linn County, IA, Comment Period Ends: 04/19/2010, Contact: Charles H. Eccleston 301–415–8537.

EIS No. 20100041, Final EIS, FHWA, MI, US–31 Holland to Grand Haven Project, Transportation Improvement to Reduce Traffic Congestation and Delay, Ottawa County, MI, Wait Period Ends: 03/22/2010, Contact: David T. Williams 517–702–1820.

EIS No. 20100042, Final EIS, USACE, CA, Natomas Levee Improvement Program Phase 4a Landside Improvement Project, Issuing of 408 Permission and 404 Permits, California Department of Water Resources (DWR) and the California Central Valley Flood Protection Board, Sutter and Sacramento Counties, CA, Wait Period Ends: 03/22/2010, Contact: Elizabeth Holland 916–557–6763.

EIS No. 20100043, Final EIS, FHWA, IA, Southeast (SE) Connector in Des Moines, Iowa, To Provide a Safe and Efficient Link between the MLK Jr. Parkway at SE 14th Street to the U.S. 65 Bypass, Funding, U.S. Army COE

Section 404 and NPDES Permits, Polk County, IA, Wait Period Ends: 03/22/2010, Contact: Lubin Quinones 515–233–7300.

EIS No. 20100044, Final EIS, USFS, CA, Lower Trinity and Mad River Motorized Travel Management, Proposed to Prohibit Cross-Country Motor Vehicle Travel Off Designated National Forest Transportation System (NFTS) Roads and Motorized Trails, Six River National Forest, CA, Wait Period Ends: 03/22/2010, Contact: Linda West 707–441–3561.

Amended Notices

EIS No. 20090442, Draft EIS, USACE, 00, Sabine-Neches Waterway Channel Improvement Project, Proposed Ocean Dredged Material Disposal Site Designation, Southeast Texas and Southwest Louisiana, Comment Period Ends: 03/12/2010, Contact: Janelle Stokes 409–766–3039.

Revision to FR Notice Published 12/24/2009: Extending Comment Period from 02/10/2010 to 03/12/2010.

Dated: February 16, 2010.

Robert W. Hargrove,

Director, NEPA Compliance Division, Office of Federal Activities.

[FR Doc. 2010–3241 Filed 2–18–10; 8:45 am]

BILLING CODE 6560–50–P

FARM CREDIT ADMINISTRATION

Farm Credit Administration Board; Sunshine Act; Regular Meeting

AGENCY: Farm Credit Administration.

SUMMARY: Notice is hereby given, pursuant to the Government in the Sunshine Act (5 U.S.C. 552b(e)(3)), that the February 11, 2010 regular meeting (75 FR 6393, February 9, 2010) of the Farm Credit Administration Board (Board) has been rescheduled due to the recent inclement weather in the Washington DC metropolitan area.

DATE AND TIME: The regular meeting of the Board will now be held at the offices of the Farm Credit Administration in McLean, Virginia, on February 24, 2010, from 9 a.m. until such time as the Board concludes its business.

FOR FURTHER INFORMATION CONTACT: Roland E. Smith, Secretary to the Farm Credit Administration Board, (703) 883–4009, TTY (703) 883–4056.

ADDRESSES: Farm Credit Administration, 1501 Farm Credit Drive, McLean, Virginia 22102–5090.

SUPPLEMENTARY INFORMATION: This meeting of the Board will be open to the public (limited space available). In order to increase the accessibility to Board meetings, persons requiring assistance should make arrangements in advance. Two of the three agenda items have been removed for this rescheduled meeting. The matter to be considered at the meeting is:

Open Session

- *Approval of Minutes*
  - January 14, 2010

Dated: *February 16, 2010.*

Roland E. Smith,

Secretary, Farm Credit Administration Board.

[FR Doc. 2010–3356 Filed 2–17–10; 4:15 pm]

BILLING CODE 6705–01–P

FEDERAL COMMUNICATIONS COMMISSION

[IB Docket No. 04–286; DA 10–245]

Fourth Meeting of the Advisory Committee for the 2012 World Radiocommunication Conference Rescheduled to March 2, 2010

AGENCY: Federal Communications Commission.

ACTION: Notice.

SUMMARY: In accordance with the Federal Advisory Committee Act, as amended, this notice advises interested persons that the fourth meeting of the WRC–12 Advisory Committee will be held at the Federal Communications Commission. The purpose of the meeting is to continue preparations for the 2012 World Radiocommunication Conference. The WRC–12 Advisory Committee will consider any preliminary views and draft proposals introduced by the WRC–12 Advisory Committee's Informal Working Groups. The meeting, originally scheduled for February 10, 2010 as published in the **Federal Register**, Vol. 75, No. 9 on January 14, 2010, was postponed due to the closure of the Federal Government because of inclement weather. Less than 15 calendar days notice of the rescheduled meeting is being provided due to the need to receive the WRC–12 Advisory Committee's recommendations to provide timely input to the meeting of the Inter-American Telecommunication Commission (CITEL).

DATES: March 2, 2010, 11 a.m. to 12 noon.

ADDRESSES: Federal Communications Commission, 445 12th Street, SW., Room TW–C305, Washington, DC 20554.

FOR FURTHER INFORMATION CONTACT: Alexander Roytblat, Designated Federal Official, WRC–12 Advisory Committee, FCC International Bureau, Strategic Analysis and Negotiations Division, at (202) 418–7501.

SUPPLEMENTARY INFORMATION: The Federal Communications Commission established the WRC–12 Advisory Committee to provide advice, technical support and recommendations relating to the preparation of United States proposals and positions for the 2012 World Radiocommunication Conference (WRC–12).

In accordance with the Federal Advisory Committee Act, Public Law 92–463, as amended, this notice advises interested persons of the fourth meeting of the WRC–12 Advisory Committee. The WRC–12 Advisory Committee has an open membership. All interested parties are invited to participate in the WRC–12 Advisory Committee and to attend its meetings. The proposed agenda for the fourth meeting is as follows:

Agenda

Fourth Meeting of the WRC–12 Advisory Committee, Federal Communications Commission, 445 12th Street, SW., Room TW–C305, Washington, DC 20554.

March 2, 2010, 11 a.m. to 12 noon

1. Opening Remarks
2. Approval of Agenda
3. Approval of the Minutes of the Third Meeting
4. Informal Working Group Reports and Documents Relating to Preliminary Views
5. New Guidelines for Federal Advisory Committee Membership
6. Future Meetings
7. Other Business

Federal Communications Commission.

Mindel De La Torre,

Chief, International Bureau.

[FR Doc. 2010–3292 Filed 2–18–10; 8:45 am]

BILLING CODE 6712–01–P

FEDERAL DEPOSIT INSURANCE CORPORATION

Notice of Agency Meeting

Pursuant to the provisions of the "Government in the Sunshine Act" (5 U.S.C. 552b), notice is hereby given that at 10:10 a.m. on Wednesday, February 17, 2010, the Board of Directors of the Federal Deposit Insurance Corporation met in closed session to consider matters related to the Corporation's supervision, resolution, and corporate activities.

In calling the meeting, the Board determined, on motion of Vice Chairman Martin J. Gruenberg,

seconded by Director John E. Bowman (Acting Director, Office of Thrift Supervision), concurred in by Director Thomas J. Curry (Appointive), and Chairman Sheila C. Bair, that Corporation business required its consideration of the matters which were to be the subject of this meeting on less than seven days' notice to the public; that no earlier notice of the meeting was practicable; that the public interest did not require consideration of the matters in a meeting open to public observation; and that the matters could be considered in a closed meeting by authority of subsections (c)(2), (c)(4), (c)(6), (c)(8), (c)(9)(A)(ii), (c)(9)(B), and (c)(10) of the "Government in the Sunshine Act" (5 U.S.C. 552b(c)(2), (c)(4), (c)(6), (c)(8), (c)(9)(A)(ii), (c)(9)(B), and (c)(10)). The meeting was held in the Board Room of the FDIC Building located at 550 - 7th Street, NW., Washington, DC.

Dated: February 17, 2010.

Federal Deposit Insurance Corporation.

By:

Robert E. Feldman,

Executive Secretary.

[FR Doc. 2010–3391 Filed 2–17–10; 4:15 pm]

BILLING CODE P

DEPARTMENT OF HEALTH AND HUMAN SERVICES

Meeting of the Secretary's Advisory Committee on Human Research Protections

AGENCY: Department of Health and Human Services, Office of the Secretary, Office of Public Health and Science.

ACTION: Notice.

SUMMARY: Pursuant to Section 10(a) of the Federal Advisory Committee Act, U.S.C. Appendix 2, notice is hereby given that the Secretary's Advisory Committee on Human Research Protections (SACHRP) will hold its twenty-second meeting. The meeting will be open to the public.

DATE: The meeting will be held on Tuesday, March 9, 2010 from 8:30 a.m. until 5 p.m. and Wednesday, March 10, 2010 from 8:30 a.m. until 5 p.m.

ADDRESSES: U.S. Department of Health & Human Services, 200 Independence Avenue, SW., Hubert H. Humphrey Building, Room 800, Washington, DC 20201.

FOR FURTHER INFORMATION CONTACT: Jerry Menikoff, M.D., J.D., Director, Office for Human Research Protections (OHRP), or Julia Gorey, J.D., Executive Director, SACHRP; U.S. Department of Health and Human Services, 1101 Wootton Parkway, Suite 200, Rockville, Maryland 20852; 240–453–8141; fax: 240–453–6909; e-mail address: *sachrp@osophs.dhhs.gov*.

SUPPLEMENTARY INFORMATION: Under the authority of 42 U.S.C. 217a, Section 222 of the Public Health Service Act, as amended, SACHRP was established to provide expert advice and recommendations to the Secretary of Health and Human Services and the Assistant Secretary for Health on issues and topics pertaining to or associated with the protection of human research subjects.

On March 9, 2010, OHRP staff will provide a summary of public comments received on two recent draft guidance documents: Institutional Review Board (IRB) Continuing Review of Research and IRB Approval of Research with Conditions. Following this presentation, there will be a panel that will examine the context for resolution of regulatory harmonization issues through the Clinical Trials Transformation Initiative and the International Council on Harmonization and Good Clinical Practice. After lunch, the day will conclude with a report from the Subpart A Subcommittee (SAS) focusing on issues surrounding consent for future use of specimens or data. SAS is charged with developing recommendations for consideration by SACHRP about the application of subpart A of 45 CFR part 46 in the current research environment. This subcommittee was established by SACHRP at its October 2006 meeting.

On March 10, 2010, co-chairs of the Subcommittee on Harmonization (SOH) will discuss the charge, initial steps, and membership of this new group. The SOH was established by SACHRP at its July 2009 meeting and is charged with identifying and prioritizing areas in which regulations and/or guidelines for human subjects research adopted by various agencies or offices within HHS would benefit from harmonization, consistency, clarity, simplification, and/or coordination. The remainder of March 10 will be devoted to continuing the previous day's focus on the work of the Subpart A Subcommittee. Public comment will be heard on both days.

Public attendance at the meeting is limited to space available. Individuals who plan to attend the meeting and need special assistance, such as sign language interpretation or other reasonable accommodations, should notify the designated contact persons. Members of the public will have the opportunity to provide comments on both days of the meeting. Public comment will be limited to five minutes per speaker. Any members of the public who wish to have printed materials distributed to SACHRP members for this scheduled meeting should submit materials to the Executive Director, SACHRP, prior to the close of business Thursday, March 4, 2010. Information about SACHRP and the draft meeting agenda will be posted on the SACHRP Web site at: *http://www.hhs.gov/ohrp/sachrp/index.html*.

Dated: February 16, 2010.

Jerry Menikoff,

Director, Office for Human Research Protections, Executive Secretary, Secretary's Advisory Committee on Human Research Protections.

[FR Doc. 2010–3271 Filed 2–18–10; 8:45 am]

BILLING CODE 4150–36–P

DEPARTMENT OF HEALTH AND HUMAN SERVICES

Health Resources and Services Administration

Agency Information Collection Activities: Proposed Collection: Comment Request

Periodically, the Health Resources and Services Administration (HRSA) publishes abstracts of information collection requests under review by the Office of Management and Budget (OMB), in compliance with the Paperwork Reduction Act of 1995 (44 U.S.C. Chapter 35). To request a copy of the clearance requests submitted to OMB for review, e-mail *paperwork@hrsa.gov* or call the HRSA Reports Clearance Office on (301) 443–1129.

The following request has been submitted to the Office of Management and Budget for review under the Paperwork Reduction Act of 1995:

Proposed Project: The Health Education Assistance Loan (HEAL) Program Regulations (OMB No. 0915–0108) Extension

The Health Education Assistance Loan (HEAL) Program has regulations that contain notification, reporting and recordkeeping requirements to ensure that the lenders, holders and schools participating in the HEAL program follow sound management procedures in the administration of federally-insured student loans. While the regulatory requirements are approved under the OMB number referenced above, much of the burden associated with the submission of required HEAL forms and certain reporting requirements is approved under

separate OMB numbers. The table below provides the estimate of burden for the remaining regulations.

The estimates of burden are as follows:

REPORTING REQUIREMENTS

Number of respondents	Number of transactions	Total transactions	Hours per response (min)	Total burden hours
17 Holders	5	78	12	16
190 Schools	.4	78	10	13
Total Reporting				29

NOTIFICATION REQUIREMENTS

Number of respondents	Number of transactions	Total transactions	Hours per response (min)	Total burden hours
7,930 Borrowers	1	7,930	10	1,322
17 Holders	7,910	134,470	10	22,412
190 Schools	.89	170	14	40
Total Notification				23,774

RECORDKEEPING REQUIREMENTS

Number of respondents	Number of transactions	Total transactions	Hours per response (min)	Total burden hours
17 Holders	3,568	60,657	14	14,153
190 Schools	257	48,822	15	12,206
Total Recordkeeping				26,359
Total				50,162

Written comments and recommendations concerning the proposed information collection should be sent within 30 days of this notice to the desk officer for HRSA, either by e-mail to *OIRA_submission@omb.eop.gov* or by fax to 202–395–6974. Please direct all correspondence to the "attention of the desk officer for HRSA."

Dated: February 5, 2010.

Sahira Rafiullah,

Director, Division of Policy Review and Coordination.

[FR Doc. 2010–3167 Filed 2–18–10; 8:45 am]

BILLING CODE 4165–15–P

DEPARTMENT OF HEALTH AND HUMAN SERVICES

National Institutes of Health

Submission for OMB Review; Comment Request; The Atherosclerosis Risk in Communities Study (ARIC)

Summary: Under the provisions of Section 3507(a)(1)(D) of the Paperwork Reduction Act of 1995, the National Heart, Lung, and Blood Institute (NHLBI), the National Institutes of Health (NIH) has submitted to the Office of Management and Budget (OMB) a request for review and approval the information collection listed below. This proposed information collection was previously published in the **Federal Register** on November 16, 2009, page 58962, and allowed 60 days for public comment. Only one comment was received. The purpose of this notice is to allow an additional 30 days for public comment. The National Institutes of Health may not conduct or sponsor, and the respondent is not required to respond to, an information collection that has been extended, revised, or implemented on or after October 1, 1995, unless it displays a currently valid OMB control number.

Proposed Collection

Title: The Atherosclerosis Risk in Communities Study (ARIC). *Type of Information Collection Request:* Extension of a currently approved collection (OMB No. 0925–0281). *Need and Use of Information Collection:* This project involves annual follow-up by telephone of participants in the ARIC study, review of their medical records, and interviews with doctors and family to identify disease occurrence. Interviewers will contact doctors and hospitals to ascertain participants' cardiovascular events. Information gathered will be used to further describe the risk factors, occurrence rates, and consequences of cardiovascular disease in middle aged and older men and women. *Frequency of Response:* The participants will be contacted annually. *Affected Public:* Individuals or households; Businesses or other for profit; Small businesses or organizations. *Type of Respondents:* Individuals or households; doctors and staff of hospitals and nursing homes. The annual reporting burden is as follows: *Estimated Number of Respondents:* 11,992; *Estimated Number of Responses per Respondent:* 1.0; *Average Burden Hours per Response:* 0.2399; and *Estimated Total Annual Burden Hours Requested:* 2,877.4. The annualized cost to respondents is estimated at $54,583, assuming respondents' time at the rate of $17.5

per hour for family and patient respondents, and $75 per hour for physicians. There are no Capital Costs to report. There are no Operating or Maintenance Costs to report.

ESTIMATE OF ANNUAL HOUR BURDEN

[2010–2013]

Type of response	Number of respondents	Frequency of response	Average time per response	Annual hour burden
Participant Follow-up	10,735	1.0	0.2500	2,683.8
Physician or Coroner (for CHD) [1]	491	1.0	0.1667	81.8
Physician (for heart failure) [1]	190	1.0	0.0833	15.8
Participant's next-of-kin [1]	575	1.0	0.1667	95.9
Total	11,992	1.0	0.2399	2,877.4

[1] Annual burden is placed on doctors, hospitals, nursing homes, and respondent relatives/informants through requests for information which will help in the compilation of the number and nature of new fatal and nonfatal events.

Request for Comments: Written comments and/or suggestions from the public and affected agencies should address one or more of the following points: (1) Evaluate whether the proposed collection of information is necessary for the proper performance of the function of the agency, including whether the information will have practical utility; (2) Evaluate the accuracy of the agency's estimate of the burden of the proposed collection of information, including the validity of the methodology and assumptions used; (3) Enhance the quality, utility, and clarity of the information to be collected; and (4) Minimize the burden of the collection of information on those who are to respond, including the use of appropriate automated, electronic, mechanical, or other technological collection techniques or other forms of information technology.

Direct Comments to OMB: Written comments and/or suggestions regarding the item(s) contained in this notice, especially regarding the estimated public burden and associated response time, should be directed to the: Office of Management and Budget, Office of Regulatory Affairs, *OIRA_submission@omb.eop.gov* or by fax to 202–395–6974, Attention: Desk Officer for NIH. To request more information on the proposed project or to obtain a copy of the data collection plans and instruments, contact: Dr. Hanyu Ni, NIH, NHLBI, 6701 Rockledge Drive, MSC 7934, Bethesda, MD 20892–7934, or call non-toll-free number (301) 435–0448 or E-mail your request, including your address to: *nihanyu@nhlbi.nih.gov.*

Comments Due Date: Comments regarding this information collection are best assured of having their full effect if received within 30 days of the date of this publication.

Dated: January 29, 2010.

Suzanne Freeman,

NHLBI Project Clearance Liaison, National Institutes of Health.

Michael Lauer,

Director, DCVS, National Institutes of Health.

[FR Doc. 2010–3204 Filed 2–18–10; 8:45 am]

BILLING CODE 4140–01–P

DEPARTMENT OF HEALTH AND HUMAN SERVICES

National Institutes of Health

Center For Scientific Review; Amended Notice of Meeting

Notice is hereby given of a change in the meeting of the Center for Scientific Review Special Emphasis Panel, February 11, 2010, 1 p.m. to February 11, 2010, 5 p.m., National Institutes of Health, Bethesda, MD, 20892 which was published in the **Federal Register** on January 20, 2010, 75 FR 3241–3242.

The meeting will be held March 4, 2010. The meeting time and location remain the same. The meeting is closed to the public.

Dated: February 3, 2010.

Jennifer Spaeth,

Director, Office of Federal Advisory Committee Policy.

[FR Doc. 2010–3199 Filed 2–18–10; 8:45 am]

BILLING CODE 4140–01–P

DEPARTMENT OF HEALTH AND HUMAN SERVICES

Centers for Disease Control and Prevention

Advisory Committee to the Director (ACD), Centers for Disease Control (CDC) and Prevention—Ethics Subcommittee (ES); Correction

AGENCY: Centers for Disease Control and Prevention (CDC), HHS.

ACTION: Notice of meeting; meeting time correction.

SUMMARY: A notice was published in the **Federal Register** on January 29, 2010, Volume 75, Number 19, Pages 4830–4831, announcing a meeting of the Advisory Committee to the Director on February 18, 2010. The time published for the aforementioned meeting is incorrect and has been changed to 1 p.m.–5 p.m.

DATES: The time of the February 18, 2010, meeting published at 75 FR 4830, January 29, 2010, is 1 p.m.–5 p.m.

FOR FURTHER INFORMATION CONTACT: Drue Barrett, PhD, Designated Federal Officer, ACD, CDC–ES, 1600 Clifton Road, NE., M/S D–50, Atlanta, Georgia 30333. Telephone: (404) 639–4690. E-mail: *dbarrett@cdc.gov.*

The Director, Management Analysis and Services Office, has been delegated the authority to sign **Federal Register** notices pertaining to announcements of meetings and other committee management activities, for both CDC and the Agency for Toxic Substances and Disease Registry.

Dated: February 16, 2010.

Andre Tyler,

Acting Director, Management Analysis and Services Office,Centers for Disease Control and Prevention.

[FR Doc. 2010–3324 Filed 2–17–10; 11:15 am]

BILLING CODE 4163–18–P

DEPARTMENT OF HEALTH AND HUMAN SERVICES

Substance Abuse and Mental Health Services Administration

Center for Substance Abuse Prevention; Notice of Meeting

Pursuant to Public Law 92–463, notice is hereby given that the Substance Abuse and Mental Health

Services Administration's (SAMHSA) Drug Testing Advisory Board (DTAB) will meet on March 8, 2010.

The meeting is open to the public and will include discussion of the Mandatory Guidelines for Federal Workplace Drug Testing Programs, including implementation of the revised Mandatory Guidelines; Federal drug testing updates from the Department of Transportation (DOT), the Department of Defense, and the Nuclear Regulatory Commission; review of significant changes in the revised Mandatory Guidelines; review of the National Laboratory Certification Program planned implementation of the revised Mandatory Guidelines; an update on the revised Federal Custody and Control Form; a review of the special proficiency testing program for initial and confirmation testing for new analytes and new cutoffs; an update on instrumented initial test facilities; an update on the DTAB working groups; and a comparison of HHS and DOT urine collection requirements.

DTAB members and invited presenters will participate in this meeting through remote internet connection. On-site attendance by the public will be limited to space available. The meeting can also be accessed by the public via teleconference. To obtain teleconference call-in numbers and access codes, to make arrangements to attend on-site, or to request special accommodations for persons with disabilities, please register at the SAMHSA Committees' Web site at *https://nac.samhsa.gov/Registration/meetingsRegistration.aspx* or communicate with DTAB's Program Assistant, Ms. Giselle Hersh (*see* contact information below).

SAMHSA would like to ensure that advisory committee meetings proceed in an orderly fashion, are conducted in a safe and secure environment, that the right of free speech is protected, and that the ability of SAMHSA Advisory Committees to accomplish their objectives is not disrupted. Therefore, the following procedures will be followed at all DTAB meetings:

- Attendees are subject to security screening, including identification (driver's license) review, metal detector screening, and inspection of briefcases, packages, etc. Each attendee will be issued a security badge that must be worn at all times while in the building.
- Any interested person who wishes to be assured of the right to make an oral presentation during the Public Comment portion of the DTAB meeting must register with Ms. Hersh before the meeting.
- Those who have not registered before the meeting will only be invited to speak at the discretion of the Chair and should submit their request to the Designated Federal Official on the day of the meeting.
- Public Comment participants who are designated to speak may be questioned only by the Chair or DTAB members.
- Audience members may not present comments or questions to DTAB members unless recognized by the Chair.
- Attendees at the meeting are asked to maintain order and not display behavior that is disruptive to the meeting (*i.e.,* shouting from the audience, loud outbursts).
- We ask that attendees not approach the DTAB table area during the meeting without permission from the Chair or the Designated Federal Official.
- The DTAB Chair or Designated Federal Official will note on the record any disruptive behavior and will ask the person to cease the behavior or else leave the meeting room.

Substantive program information, a summary of the meeting, and a roster of DTAB members may be obtained as soon as possible after the meeting, either by accessing the SAMHSA Committee Web site, *https://www.nac.samhsa.gov/DTAB/meetings.aspx,* or by contacting Ms. Hersh. The transcript for the meeting will also be available on the SAMHSA Committee Web site within three weeks after the meeting.

Committee Name: Substance Abuse and Mental Health Services Administration, Drug Testing Advisory Board.

Date/Time/Type: March 8, 2010 from 10 a.m. to 4:45 p.m. EST: Open.

Place: Sugarloaf and Seneca Conference Rooms, 1 Choke Cherry Road, Rockville, Maryland 20857.

Contacts:

Ms. Giselle Hersh, Program Assistant, SAMHSA Drug Testing Advisory Board, 1 Choke Cherry Road, Room 2–1042, Rockville, Maryland 20857, *Telephone:* 240–276–2600, *Fax:* 240–276–2610, *E-mail: Giselle.Hersh@samhsa.hhs.gov.*

Donna M. Bush, PhD, Designated Federal Official, SAMHSA Drug Testing Advisory Board, 1 Choke Cherry Road, Room 2–1033, Rockville, Maryland 20857, *Telephone:* 240–276–2600, *Fax:* 240–276–2610.

Toian Vaughn,

Committee Management Officer, Substance Abuse and Mental Health Services Administration.

[FR Doc. 2010–3227 Filed 2–18–10; 8:45 am]

BILLING CODE 4162–20–P

DEPARTMENT OF HEALTH AND HUMAN SERVICES

National Institutes of Health

National Institute of General Medical Sciences; Notice of Closed Meetings

Pursuant to section 10(d) of the Federal Advisory Committee Act, as amended (5 U.S.C. App.), notice is hereby given of the following meetings.

The meetings will be closed to the public in accordance with the provisions set forth in sections 552b(c)(4) and 552b(c)(6), Title 5 U.S.C., as amended. The grant applications and the discussions could disclose confidential trade secrets or commercial property such as patentable material, and personal information concerning individuals associated with the grant applications, the disclosure of which would constitute a clearly unwarranted invasion of personal privacy.

Name of Committee: National Institute of General Medical Sciences Initial Review Group, Minority Programs Review Subcommittee B.

Date: March 8–9, 2010.

Time: 8:30 a.m. to 5 p.m.

Agenda: To review and evaluate grant applications.

Place: Hotel Palomar—Washington, DC, Washington, DC 20037.

Contact Person: Rebecca H. Johnson, PhD, Scientific Review Officer, Office of Scientific Review, National Institute of General Medical Sciences, National Institutes of Health, Natcher Building, Room 3AN18C, Bethesda, MD 20892, 301–594–2771, *johnsonrh@nigms.nih.gov.*

Name of Committee: National Institute of General Medical Sciences Initial Review Group, Minority Programs Review Subcommittee A.

Date: March 8, 2010.

Time: 8:30 a.m. to 5 p.m.

Agenda: To review and evaluate grant applications.

Place: Courtyard Marriott Chevy Chase, Chevy Chase, MD 20815.

Contact Person: Mona R. Trempe, PhD, Scientific Review Officer, Office of Scientific Review, National Institute of General Medical Sciences, National Institutes of Health, 45 Center Drive, Room 3AN12, Bethesda, MD 20892, 301–594–3998, *trempemo@mail.nih.gov.*

(Catalogue of Federal Domestic Assistance Program Nos. 93.375, Minority Biomedical Research Support; 93.821, Cell Biology and Biophysics Research; 93.859, Pharmacology, Physiology, and Biological Chemistry Research; 93.862, Genetics and Developmental Biology Research; 93.88, Minority Access to Research Careers; 93.96, Special Minority Initiatives, National Institutes of Health, HHS)

Dated: February 4, 2010.

Jennifer Spaeth,

Director, Office of Federal Advisory Committee Policy.

[FR Doc. 2010–3200 Filed 2–18–10; 8:45 am]

BILLING CODE 4140–01–P

DEPARTMENT OF HEALTH AND HUMAN SERVICES

National Institutes of Health

Eunice Kennedy Shriver National Institute of Child Health & Human Development; Notice of Closed Meeting

Pursuant to section 10(d) of the Federal Advisory Committee Act, as amended (5 U.S.C. App.), notice is hereby given of the following meeting.

The meeting will be closed to the public in accordance with the provisions set forth in sections 552b(c)(4) and 552b(c)(6), Title 5 U.S.C., as amended. The grant applications and the discussions could disclose confidential trade secrets or commercial

property such as patentable material, and personal information concerning individuals associated with the grant applications, the disclosure of which would constitute a clearly unwarranted invasion of personal privacy.

Name of Committee: National Institute of Child Health and Human Development Special Emphasis Panel; Changing Parental Relationships and Child Well-Being.

Date: March 5, 2010.

Time: 1 p.m. to 4 p.m.

Agenda: To review and evaluate grant applications.

Place: National Institutes of Health, 6100 Executive Boulevard, Room 5B01, Rockville, MD 20852 (Telephone Conference Call).

Contact Person: Carla T. Walls, PhD, Scientific Review Officer, Division of Scientific Review, Eunice Kennedy Shriver National Institute of Child Health and Human Development, NIH, 6100 Executive Blvd., Room 5B01, Bethesda, MD 20892, (301) 435–6898, *wallsc@mail.nih.gov.*

(Catalogue of Federal Domestic Assistance Program Nos. 93.864, Population Research; 93.865, Research for Mothers and Children; 93.929, Center for Medical Rehabilitation Research; 93.209, Contraception and Infertility Loan Repayment Program, National Institutes of Health, HHS)

Dated: February 4, 2010.

Jennifer Spaeth,

Director, Office of Federal Advisory Committee Policy.

[FR Doc. 2010–3201 Filed 2–18–10; 8:45 am]

BILLING CODE 4140–01–P

DEPARTMENT OF HEALTH AND HUMAN SERVICES

National Institutes of Health

Eunice Kennedy Shriver National Institute of Child Health & Human Development; Amended Notice of Meeting

Notice is hereby given of a change in the meeting of the National Institute of Child Health and Human Development Special Emphasis Panel, February 16, 2010, 2 p.m. to February 16, 2010, 3 p.m., National Institutes of Health, 6100 Executive Boulevard, Room 5B01, Rockville, MD, 20852 which was published in the **Federal Register** on January 22, 2010, 75 FR 3741.

The meeting date and time have been changed to March 10, 2010, 1 p.m. to March 10, 2010, 3 p.m. The meeting is closed to the public.

Dated: February 4, 2010.

Jennifer Spaeth,

Director, Office of Federal Advisory Committee Policy.

[FR Doc. 2010–3203 Filed 2–18–10; 8:45 am]

BILLING CODE 4140–01–P

DEPARTMENT OF HEALTH AND HUMAN SERVICES

National Institutes of Health

National Cancer Institute; Cancellation of Meeting

Notice is hereby given of the cancellation of the National Cancer Institute Special Emphasis Panel, February 24, 2010, 8 a.m. to February 26, 2010, 6 p.m., Gaithersburg Marriott Washingtonian Center, 9751 Washingtonian Blvd., Gaithersburg, MD 20878 which was published in the **Federal Register** on December 15, 2009, 74 FR 66367.

Dr. Wirth's February 24–26, 2010 meeting has been cancelled.

Dated: February 8, 2010.

Jennifer Spaeth,

Director, Office of Federal Advisory Committee Policy.

[FR Doc. 2010–3206 Filed 2–18–10; 8:45 am]

BILLING CODE 4140–01–P

DEPARTMENT OF HEALTH AND HUMAN SERVICES

National Institutes of Health

Eunice Kennedy Shriver National Institute of Child Health & Human Development; Notice of Closed Meeting

Pursuant to section 10(d) of the Federal Advisory Committee Act, as amended (5 U.S.C. App.), notice is hereby given of the following meeting.

The meeting will be closed to the public in accordance with the provisions set forth in sections 552b(c)(4) and 552b(c)(6), Title 5 U.S.C., as amended. The grant applications and the discussions could disclose confidential trade secrets or commercial property such as patentable material, and personal information concerning individuals associated with the grant applications, the disclosure of which would constitute a clearly unwarranted invasion of personal privacy.

Name of Committee: National Institute of Child Health and Human Development Initial Review Group; Health, Behavior, and Context Subcommittee.

Date: February 22, 2010.

Time: 8 a.m. to 6 p.m.

Agenda: To review and evaluate grant applications.

Place: Embassy Suites at the Chevy Chase Pavilion, 4300 Military Road, NW., Washington, DC 20015.

Contact Person: Michele C. Hindi-Alexander, PhD, Division of Scientific Review, National Institutes of Health, Eunice Kennedy Shriver, National Institute For Child Health & Development, 6100 Executive Boulevard, Room 5B01, Bethesda, MD 20812–7510, (301) 435–8382, *hindialm@mail.nih.gov.*

This notice is being published less than 15 days prior to the meeting due to the timing limitations imposed by the review and funding cycle.

(Catalogue of Federal Domestic Assistance Program Nos. 93.864, Population Research; 93.865, Research for Mothers and Children; 93.929, Center for Medical Rehabilitation Research; 93.209, Contraception and Infertility Loan Repayment Program, National Institutes of Health, HHS)

Dated: February 4, 2010.

Jennifer Spaeth,

Director, Office of Federal Advisory Committee Policy.

[FR Doc. 2010–3202 Filed 2–18–10; 8:45 am]

BILLING CODE 4140–01–P

DEPARTMENT OF HEALTH AND HUMAN SERVICES

National Institutes of Health

National Institute of Dental & Craniofacial Research; Notice of Closed Meeting

Pursuant to section 10(d) of the Federal Advisory Committee Act, as amended (5 U.S.C. App.), notice is hereby given of the following meeting.

The meeting will be closed to the public in accordance with the provisions set forth in sections 552b(c)(4) and 552b(c)(6), Title 5 U.S.C., as amended. The grant applications and the discussions could disclose confidential trade secrets or commercial property such as patentable material, and personal information concerning individuals associated with the grant applications, the disclosure of which would constitute a clearly unwarranted invasion of personal privacy.

Name of Committee: National Institute of Dental and Craniofacial Research Special Emphasis Panel; Review K08, F31.

Date: March 2, 2010.

Time: 12 p.m. to 1 p.m.

Agenda: To review and evaluate grant applications.

Place: Four Points by Sheraton Washington DC Downtown, 1201 K Street, NW., Washington, DC 20005.

Contact Person: Mary Kelly, Scientific Review Officer, Scientific Review Branch, National Inst of Dental & Craniofacial Research, NIH 6701 Democracy Blvd., Room 672, MSC 4878, Bethesda, MD 20892–4878, 301–594–4809, *mary_kelly@nih.gov.*

(Catalogue of Federal Domestic Assistance Program Nos. 93.121, Oral Diseases and Disorders Research, National Institutes of Health, HHS)

Dated: February 4, 2010.

Jennifer Spaeth,

Director, Office of Federal Advisory Committee Policy.

[FR Doc. 2010–3208 Filed 2–18–10; 8:45 am]

BILLING CODE 4140–01–P

DEPARTMENT OF HEALTH AND HUMAN SERVICES

National Institutes of Health

National Institute of Dental & Craniofacial Research; Notice of Closed Meetings

Pursuant to section 10(d) of the Federal Advisory Committee Act, as amended (5 U.S.C. App.), notice is hereby given of the following meetings.

The meetings will be closed to the public in accordance with the provisions set forth in sections 552b(c)(4) and 552b(c)(6), Title 5 U.S.C., as amended. The grant applications and the discussions could disclose confidential trade secrets or commercial property such as patentable material, and personal information concerning individuals associated with the grant applications, the disclosure of which would constitute a clearly unwarranted invasion of personal privacy.

Name of Committee: National Institute of Dental and Craniofacial Research Special Emphasis Panel Review of R01 Application for RFA–DE–10–001, Oral Mucosal Vaccination against HIV Infection.

Date: March 15, 2010.

Time: 8 a.m. to 7 p.m.

Agenda: To review and evaluate grant applications.

Place: Hilton Washington/Rockville, 1750 Rockville Pike, Rockville, MD 20852.

Contact Person: Marilyn Moore-Hoon, PhD, Scientific Review Officer, Scientific Review Branch, National Institute of Dental and Craniofacial Research, 6701 Democracy Blvd., Rm. 676, Bethesda, MD 20892–4878, 301–594–4861, *mooremar@nidcr.nih.gov.*

Name of Committee: National Institute of Dental and Craniofacial Research Special Emphasis Panel Review of R13 Application for NIH Support of Conferences and Scientific Meetings.

Date: March 19, 2010.

Time: 1 p.m. to 2 p.m.

Agenda: To review and evaluate grant applications.

Place: National Institutes of Health, One Democracy Plaza, 6701 Democracy Boulevard, Bethesda, MD 20892 (Virtual Meeting).

Contact Person: Victor Henriquez, PhD, Scientific Review Officer, DEA/SRB/NIDCR, 6701 Democracy Blvd., Room 668, Bethesda, MD 20892–4878, 301–451–2405, *henriquv@nidcr.nih.gov.*

(Catalogue of Federal Domestic Assistance Program Nos. 93.121, Oral Diseases and Disorders Research, National Institutes of Health, HHS)

Dated: February 4, 2010.

Jennifer Spaeth,

Director, Office of Federal Advisory Committee Policy.

[FR Doc. 2010–3214 Filed 2–18–10; 8:45 am]

BILLING CODE 4140–01–P

DEPARTMENT OF HEALTH AND HUMAN SERVICES

National Institutes of Health

Center for Scientific Review; Notice of Closed Meetings

Pursuant to section 10(d) of the Federal Advisory Committee Act, as amended (5 U.S.C. App.), notice is hereby given of the following meetings.

The meetings will be closed to the public in accordance with the provisions set forth in sections 552b(c)(4) and 552b(c)(6), Title 5 U.S.C., as amended. The grant applications and the discussions could disclose confidential trade secrets or commercial property such as patentable material, and personal information concerning individuals associated with the grant applications, the disclosure of which would constitute a clearly unwarranted invasion of personal privacy.

Name of Committee: Center for Scientific Review Special Emphasis Panel, Member Conflict: Radiation Therapy.

Date: February 23, 2010.

Time: 1 p.m. to 2:30 p.m.

Agenda: To review and evaluate grant applications.

Place: National Institutes of Health, 6701 Rockledge Drive, Bethesda, MD 20892 (Telephone Conference Call).

Contact Person: Syed M. Quadri, PhD, Scientific Review Officer, Center for Scientific Review, National Institutes of Health, 6701 Rockledge Drive, Room 6210, MSC 7804, Bethesda, MD 20892, 301–435–1211, *quadris@csr.nih.gov.*

This notice is being published less than 15 days prior to the meeting due to the timing limitations imposed by the review and funding cycle.

Name of Committee: Center for Scientific Review Special Emphasis Panel, Small Business: Developmental Biology and Aging.

Date: March 2–3, 2010.

Time: 8 a.m. to 5 p.m.

Agenda: To review and evaluate grant applications.

Place: National Institutes of Health, 6701 Rockledge Drive, Bethesda, MD 20892 (Virtual Meeting).

Contact Person: Joseph G. Rudolph, PhD, Chief and Scientific Review Officer, Center for Scientific Review, National Institutes of Health, 6701 Rockledge Drive, Room 5186, MSC 7844, Bethesda, MD 20892. 301–408–9098. *josephru@csr.nih.gov.*

Name of Committee: Center for Scientific Review Special Emphasis Panel, Member Conflict: Cancer Therapeutics.

Date: March 8, 2010.

Time: 1 p.m. to 2:30 p.m.

Agenda: To review and evaluate grant applications.

Place: National Institutes of Health, 6701 Rockledge Drive, Bethesda, MD 20892 (Telephone Conference Call).

Contact Persons: Syed M. Quadri, PhD, Scientific Review Officer, Center for Scientific Review, National Institutes of Health, 6701 Rockledge Drive, Room 6210, MSC 7804, Bethesda, MD 20892, 301–435–1211, *quadris@csr.nih.gov.*

Name of Commttee: Center for Scientific Review Special Emphasis Panel, Small Business: Cell Biology and Molecular Imaging.

Date: March 11, 2010.

Time: 8 a.m. to 6 p.m.

Agenda: To review and evaluate grant applications.

Place: Churchill Hotel, 1914 Connecticut Avenue, NW., Washington, DC 20009.

Contact Person: Maria Adele DeBernardi, Scientific Review Officer, Center for Scientific Review, National Institutes of Health, 6701 Rockledge Drive, Room 6158, MSC 7849, Bethesda, MD 20892, 301–435–0198, *debernardima@csr.nih.gov.*

Name of Committee: Center for Scientific Review Special Emphasis Panel, Genetics and Epigenetics in Health and Disease.

Date: March 12–13, 2010.

Time: 9 a.m. to 11 a.m.

Agenda: To review and evaluate grant applications.

Place: National Institutes of Health, 6701 Rockledge Drive, Bethesda, MD 20892. (Virtual Meeting).

Contact Person: Richard Panniers, PhD, Scientific Review Officer, Center for Scientific Review, National Institutes of Health, 6701 Rockledge Drive, Room 2212, MSC 7890, Bethesda, MD 20892, (301) 435–1741, *pannierr@csr.nih.gov.*

(Catalogue of Federal Domestic Assistance Program Nos. 93.306, Comparative Medicine; 93.333, Clinical Research, 93.306, 93.333, 93.337, 93.393–93.396, 93.837–93.844, 93.846–93.878, 93.892, 93.893, National Institutes of Health, HHS)

Dated: February 12, 2010.

Jennifer Spaeth,

Director, Office of Federal Advisory Committee Policy.

[FR Doc. 2010–3285 Filed 2–18–10; 8:45 am]

BILLING CODE 4140–01–P

DEPARTMENT OF HEALTH AND HUMAN SERVICES

National Institutes of Health

National Institute of Allergy and Infectious Diseases; Notice of Closed Meeting

Pursuant to section 10(d) of the Federal Advisory Committee Act, as amended (5 U.S.C. App.), notice is hereby given of the following meeting.

The meeting will be closed to the public in accordance with the

provisions set forth in sections 552b(c)(4) and 552b(c)(6), Title 5 U.S.C., as amended. The grant applications and the discussions could disclose confidential trade secrets or commercial property such as patentable material, and personal information concerning individuals associated with the grant applications, the disclosure of which would constitute a clearly unwarranted invasion of personal privacy.

Name of Committee: National Institute of Allergy and Infectious Diseases Special Emphasis Panel, System Biology Approaches to HIV Infection.

Date: March 18, 2010.

Time: 8 a.m. to 2 p.m.

Agenda: To review and evaluate grant applications.

Place: National Institutes of Health, 6700B Rockledge Drive, Bethesda, MD 20817 (Telephone Conference Call).

Contact Person: Eleazar Cohen, PhD, Scientific Review Officer, Division of Extramural Activites, NIAID/NIH/DHHS, 6700B Rockledge Drive, Room 3129, Bethesda, MD 20892, 301–435–3564, *ec17w@nih.gov.*

(Catalogue of Federal Domestic Assistance Program Nos. 93.855, Allergy, Immunology, and Transplantation Research; 93.856, Microbiology and Infectious Diseases Research, National Institutes of Health, HHS)

Dated: February 12, 2010.

Jennifer Spaeth,

Director, Office of Federal Advisory Committee Policy.

[FR Doc. 2010–3283 Filed 2–18–10; 8:45 am]

BILLING CODE 4140–01–P

DEPARTMENT OF HEALTH AND HUMAN SERVICES

National Institutes of Health

National Institute of Environmental Health Sciences; Notice of Closed Meeting

Pursuant to section 10(d) of the Federal Advisory Committee Act, as amended (5 U.S.C. App.), notice is hereby given of the following meeting.

The meeting will be closed to the public in accordance with the provisions set forth in sections 552b(c)(4) and 552b(c)(6), Title 5 U.S.C., as amended. The grant applications and the discussions could disclose confidential trade secrets or commercial property such as patentable material, and personal information concerning individuals associated with the grant applications, the disclosure of which would constitute a clearly unwarranted invasion of personal privacy.

Name of Committee: National Institute of Environmental Health Sciences Special Emphasis Panel, Worker Education and Training Review Meeting.

Date: February 24–26, 2010.

Time: 8 a.m. to 12 p.m.

Agenda: To review and evaluate grant applications.

Place: Sheraton Chapel Hill, One Europa Drive, Chapel Hill, NC 27514.

Contact Person: Sally Eckert-Tilotta, PhD, Scientific Review Administrator, National Inst. of Environmental Health Sciences, Office of Program Operations, Scientific Review Branch, P.O. Box 12233, Research Triangle Park, NC 27709. (919) 541–1446, *eckertt1@niehs.nih.gov.*

(Catalogue of Federal Domestic Assistance Program Nos. 93.115, Biometry and Risk Estimation—Health Risks from Environmental Exposures; 93.142, NIEHS Hazardous Waste Worker Health and Safety Training; 93.143, NIEHS Superfund Hazardous Substances—Basic Research and Education; 93.894, Resources and Manpower Development in the Environmental Health Sciences; 93.113, Biological Response to Environmental Health Hazards; 93.114, Applied Toxicological Research and Testing, National Institutes of Health, HHS)

Dated: February 4, 2010.

Jennifer Spaeth,

Director, Office of Federal Advisory Committee Policy.

[FR Doc. 2010–3217 Filed 2–18–10; 8:45 am]

BILLING CODE 4140–01–P

DEPARTMENT OF HEALTH AND HUMAN SERVICES

National Institutes of Health

National Institute of Allergy and Infectious Diseases; Notice of Closed Meetings

Pursuant to section 10(d) of the Federal Advisory Committee Act, as amended (5 U.S.C. App.), notice is hereby given of the following meetings.

The meetings will be closed to the public in accordance with the provisions set forth in sections 552b(c)(4) and 552b(c)(6), Title 5 U.S.C., as amended. The grant applications and the discussions could disclose confidential trade secrets or commercial property such as patentable material, and personal information concerning individuals associated with the grant applications, the disclosure of which would constitute a clearly unwarranted invasion of personal privacy.

Name of Committee: National Institute of Allergy and Infectious Diseases Special Emphasis Panel; Development of Technologies to Facilitate the Use of, and Response to, Biodefense Vaccines.

Date: March 2, 2010.

Time: 8 a.m. to 6:30 p.m.

Agenda: To review and evaluate contract proposals.

Place: Crowne Plaza Hotel—Silver Spring, 8777 Georgia Avenue, Silver Spring, MD 20910.

Contact Person: Tracy A. Shahan, PhD, MBA, Scientific Review Officer, Scientific Review Program, NIAID/NIH/DHHS, 6700B Rockledge Drive, MSC 7616, Bethesda, MD 20892–7616, (301) 451–2606, *tshahan@niaid.nih.gov.*

Name of Committee: National Institute of Allergy and Infectious Diseases Special Emphasis Panel; Human Immune Profiling Meeting 2: Review of U19 Applications.

Date: March 15–17, 2010.

Time: 8 a.m. to 6 p.m.

Agenda: To review and evaluate grant applications.

Place: Marriott Courtyard Gaithersburg Washingtonian Ctr., 204 Boardwalk Place, Salon A & B, Gaithersburg, MD 20878.

Contact Person: Quirijn Vos, PhD, Scientific Review Officer, Scientific Review Program, Division of Extramural Activities, NIH/NIAID/DHHS, 6700B Rockledge Drive, MSC 7616, Bethesda, MD 20892, 301–451–2666, *qvos@niaid.nih.gov.*

(Catalogue of Federal Domestic Assistance Program Nos. 93.855, Allergy, Immunology, and Transplantation Research; 93.856, Microbiology and Infectious Diseases Research, National Institutes of Health, HHS)

Dated: February 4, 2010.

Jennifer Spaeth,

Director, Office of Federal Advisory Committee Policy.

[FR Doc. 2010–3213 Filed 2–18–10; 8:45 am]

BILLING CODE 4140–01–P

DEPARTMENT OF HEALTH AND HUMAN SERVICES

National Institutes of Health

National Center for Research Resources; Notice of Closed Meetings

Pursuant to section 10(d) of the Federal Advisory Committee Act, as amended (5 U.S.C. App.), notice is hereby given of the following meetings.

The meetings will be closed to the public in accordance with the provisions set forth in sections 552b(c)(4) and 552b(c)(6), Title 5 U.S.C., as amended. The grant applications and the discussions could disclose confidential trade secrets or commercial property such as patentable material, and personal information concerning individuals associated with the grant applications, the disclosure of which would constitute a clearly unwarranted invasion of personal privacy.

Name of Committee: National Center for Research Resources Special Emphasis Panel; RCTR.

Date: March 3, 2010.

Time: 1 p.m. to 3:30 p.m.

Agenda: To review and evaluate grant applications.

Place: National Institutes of Health, One Democracy Plaza, 6701 Democracy Boulevard, Bethesda, MD 20892.

Contact Person: Mohan Viswanathan, PhD, Deputy Director, Office of Review, NCRR,

National Institutes of Health, 6701 Democracy Blvd., Room 1084, MSC 4874, 1 Democracy Plaza, Bethesda, MD 20892–4874, 301–435–0829, *mv10f@nih.gov.*

Name of Committee: National Center for Research Resources Special Emphasis Panel; COBRE III.

Date: March 9–10, 2010.

Time: 8 a.m. to 5 p.m.

Agenda: To review and evaluate grant applications.

Place: Hilton Washington/Rockville, 1750 Rockville Pike, Rockville, MD 20852.

Contact Person: Barbara J. Nelson, PhD, Scientific Review Officer, Office of Review, National Center for Research Resources, National Institutes of Health, 6701 Democracy Blvd., 1 Dem. Plaza, Room 1080, Bethesda, MD 20892, 301–435–0806, *nelsonbj@mail.nih.gov.*

Name of Committee: National Center for Research Resources Special Emphasis Panel; Biotechnology Review 2010.

Date: March 9–10, 2010.

Time: 8 a.m. to 5 p.m.

Agenda: To review and evaluate grant applications.

Place: Bethesda Marriott Suites, 6711 Democracy Boulevard, Bethesda, MD 20817.

Contact Person: Lee Warren Slice, PhD, Scientific Review Officer, Office of Review, National Center for Research Resources, 6701 Democracy Blvd., Room 1068, Bethesda, MD 20892, 301–435–0965.

Name of Committee: National Center for Research Resources Special Emphasis Panel; CM SEP.

Date: March 11, 2010.

Time: 8 a.m. to 3 p.m.

Agenda: To review and evaluate grant applications.

Place: National Institutes of Health, One Democracy Plaza, 6701 Democracy Boulevard, Bethesda, MD 20892 (Virtual Meeting).

Contact Person: Sheri A. Hild, PhD, Scientific Review Officer, National Institutes of Health, National Center for Research Resources, Office of Review, 6701 Democracy Blvd., Rm. 1082, Bethesda, MD 20892, 301–435–0811, *hildsa@mail.nih.gov.*

Name of Committee: National Center for Research Resources Special Emphasis Panel; Pre-Application for a Biomedical Technology Research Resource.

Date: March 15–18, 2010.

Time: 8 a.m. to 5 p.m.

Agenda: To review and evaluate grant applications.

Place: National Institutes of Health, One Democracy Plaza, 6701 Democracy Boulevard, Bethesda, MD 20892.

Contact Person: Lisa A. Newman, SCD, Scientific Review Office, National Institutes of Health, National Center for Research Resources, Office of Review, Room 1074, 6701 Democracy Blvd., MSC 4874, Bethesda, MD 20892, 301–435–0965, *newmanla2@mail.nih.gov.*

Name of Committee: National Center for Research Resources Special Emphasis Panel; RCMI COBRE.

Date: March 17–18, 2010.

Time: 8 a.m. to 5 p.m.

Agenda: To review and evaluate grant applications.

Place: Bethesda Marriott Suites, 6711 Democracy Blvd., Bethesda, MD 20817.

Contact Person: Steven Birken, PhD, Scientific Review Officer, Office of Review, NCRR, National Institutes of Health, 6701 Democracy Blvd., 1 Democracy Plaza, Room 1078, MSC 4874, Bethesda, MD 20892–4874, 391–435–1078.

(Catalogue of Federal Domestic Assistance Program Nos. 93.306, Comparative Medicine; 93.333, Clinical Research; 93.371, Biomedical Technology; 93.389, Research Infrastructure, 93.306, 93.333; 93.702, ARRA Related Construction Awards, National Institutes of Health, HHS)

Dated: February 4, 2010.

Jennifer Spaeth,

Director, Office of Federal Advisory Committee Policy.

[FR Doc. 2010–3205 Filed 2–18–10; 8:45 am]

BILLING CODE 4140–01–P

DEPARTMENT OF HEALTH AND HUMAN SERVICES

National Institutes of Health

National Institute of General Medical Sciences; Notice of Closed Meeting

Pursuant to section 10(d) of the Federal Advisory Committee Act, as amended (5 U.S.C. App.), notice is hereby given of the following meeting.

The meeting will be closed to the public in accordance with the provisions set forth in sections 552b(c)(4) and 552b(c)(6), Title 5 U.S.C., as amended. The grant applications and the discussions could disclose confidential trade secrets or commercial property such as patentable material, and personal information concerning individuals associated with the grant applications, the disclosure of which would constitute a clearly unwarranted invasion of personal privacy.

Name of Committee: National Institute of General Medical Sciences Initial Review Group, Biomedical Research and Research Training Review Subcommittee A.

Date: March 4, 2010.

Time: 8 a.m. to 5 p.m.

Agenda: To review and evaluate grant applications.

Place: Residence Inn by Marriott, 7335 Wisconsin Avenue, Bethesda, MD 20814.

Contact Person: Carole H. Latker, PhD, Scientific Review Officer, Office of Scientific Review, National Institute of General Medical Sciences, National Institutes of Health, Natcher Building, Room 3AN18, Bethesda, MD 20892, (301) 594–2848, *latkerc@nigms.nih.gov.*

(Catalogue of Federal Domestic Assistance Program Nos. 93.375, Minority Biomedical Research Support; 93.821, Cell Biology and Biophysics Research; 93.859, Pharmacology, Physiology, and Biological Chemistry Research; 93.862, Genetics and Developmental Biology Research; 93.88, Minority Access to Research Careers; 93.96, Special Minority Initiatives, National Institutes of Health, HHS)

Dated: February 4, 2010.

Jennifer Spaeth,

Director, Office of Federal Advisory Committee Policy.

[FR Doc. 2010–3211 Filed 2–18–10; 8:45 am]

BILLING CODE 4140–01–P

DEPARTMENT OF HEALTH AND HUMAN SERVICES

National Institutes of Health

National Institute of Allergy and Infectious Diseases; Notice of Closed Meetings

Pursuant to section 10(d) of the Federal Advisory Committee Act, as amended (5 U.S.C. App.), notice is hereby given of the following meetings.

The meetings will be closed to the public in accordance with the provisions set forth in sections 552b(c)(4) and 552b(c)(6), Title 5 U.S.C., as amended. The grant applications and the discussions could disclose confidential trade secrets or commercial property such as patentable material, and personal information concerning individuals associated with the grant applications, the disclosure of which would constitute a clearly unwarranted invasion of personal privacy.

Name of Committee: National Institute of Allergy and Infectious Diseases Special Emphasis Panel, Basic Vaccine Discovery Research.

Date: March 3–4, 2010.

Time: 8 a.m. to 6 p.m.

Agenda: To review and evaluate grant applications.

Place: Hyatt Regency Bethesda, One Bethesda Metro Center, 7400 Wisconsin Avenue, Bethesda, MD 20814.

Contact Person: Eugene R. Baizman, PhD, Scientific Review Officer, Scientific Review Program, Division of Extramural Activities, NIAID/NIH/DHHS, 6700B Rockledge Drive, MSC 7616, Bethesda, MD 20892. 301–402–1464. *eb237e@nih.gov.*

Name of Committee: National Institute of Allergy and Infectious Diseases Special Emphasis Panel, NIAID Product Development Public Private Partnerships.

Date: March 3–4, 2010.

Time: 8 a.m. to 1 p.m.

Agenda: To review and evaluate grant applications.

Place: Crowne Plaza Hotel—Silver Spring, 8777 Georgia Avenue, Silver Spring, MD 20910.

Contact Person: Jane K. Battles, PhD, Scientific Review Officer, Scientific Review Program, Division of Extramural Activities, National Institutes of Health/NIAID, 6700B Rockledge Drive, MSC 7616, Bethesda, MD 20892–7616. 301–451–2744. *battlesja@mail.nih.gov.*

(Catalogue of Federal Domestic Assistance Program Nos. 93.855, Allergy, Immunology, and Transplantation Research; 93.856, Microbiology and Infectious Diseases Research, National Institutes of Health, HHS)

Dated: February 4, 2010.

Jennifer Spaeth,

Director, Office of Federal Advisory Committee Policy.

[FR Doc. 2010–3218 Filed 2–18–10; 8:45 am]

BILLING CODE 4140–01–P

DEPARTMENT OF HEALTH AND HUMAN SERVICES

National Institutes of Health

National Cancer Institute; Notice of Closed Meetings

Pursuant to section 10(d) of the Federal Advisory Committee Act, as amended (5 U.S.C. App.), notice is hereby given of the following meetings.

The meetings will be closed to the public in accordance with the provisions set forth in sections 552b(c)(4) and 552b(c)(6), Title 5 U.S.C., as amended. The grant applications and/or contract proposals and the discussions could disclose confidential trade secrets or commercial property such as patentable material, and personal information concerning individuals associated with the grant applications and/or contract proposals, the disclosure of which would constitute a clearly unwarranted invasion of personal privacy.

Name of Committee: National Cancer Institute Special Emphasis Panel, Quantitative Imaging for Evaluation of Responses to Cancer Therapies.

Date: March 4, 2010.

Time: 8 a.m. to 6 p.m.

Agenda: To review and evaluate grant applications.

Place: Bethesda North Marriott Hotel & Conference Center, Montgomery County Conference Center Facility, 5701 Marinelli Road, North Bethesda, MD 20852.

Contact Person: Viatcheslav A Soldatenkov, M.D., PhD, Scientific Review Officer, Special Review and Logistics Branch, Division of Extramural Activities, National Cancer Institute, 6116 Executive Blvd., Room 8057, Bethesda, MD 20892–8329. 301–451–4758. *soldatenkovv@mail.nih.gov.*

Name of Committee: National Cancer Institute Special Emphasis Panel, SBIR Topic 258.

Date: March 25, 2010.

Time: 12:30 p.m. to 5:30 p.m.

Agenda: To review and evaluate contract proposals.

Place: National Institutes of Health, 6116 Executive Boulevard, Room 210, Rockville, MD 20852 (Telephone Conference Call).

Contact Person: Viatcheslav A Soldatenkov, M.D., PhD, Scientific Review Officer, Special Review and Logistics Branch, Division of Extramural Activities, National Cancer Institute, 6116 Executive Blvd., Room 8057, Bethesda, MD 20892–8329. 301–451–4758. *soldatenkovv@mail.nih.gov.*

Name of Committee: National Cancer Institute Special Emphasis Panel, SBIR Topic 276.

Date: March 26, 2010.

Time: 12:30 p.m. to 5:30 p.m.

Agenda: To review and evaluate contract proposals.

Place: National Institutes of Health, 6116 Executive Boulevard, Room 210, Rockville, MD 20852 (Telephone Conference Call).

Contact Person: Viatcheslav A Soldatenkov, M.D., PhD, Scientific Review Officer, Special Review and Logistics Branch, Division of Extramural Activities, National Cancer Institute, 6116 Executive Blvd., Room 8057, Bethesda, MD 20892–8329. 301–451–4758. *soldatenkovv@mail.nih.gov.*

Name of Committee: National Cancer Institute Special Emphasis Panel, Portable e-Technology Diet and Physical Activity Tools for Consumers.

Date: April 7, 2010.

Time: 11 a.m. to 3 p.m.

Agenda: To review and evaluate contract proposals.

Place: National Institutes of Health, 6116 Executive Boulevard, Room 405, Rockville, MD 20852 (Telephone Conference Call).

Contact Person: Marvin L. Salin, PhD, Scientific Review Officer, Special Review and Logistics Branch, Division of Extramural Activities, National Cancer Institute, NIH, 6116 Executive Boulevard, Room 7073, Bethesda, MD 20892–8329. 301–496–0694. *msalin@mail.nih.gov.*

(Catalogue of Federal Domestic Assistance Program Nos. 93.392, Cancer Construction; 93.393, Cancer Cause and Prevention Research; 93.394, Cancer Detection and Diagnosis Research; 93.395, Cancer Treatment Research; 93.396, Cancer Biology Research; 93.397, Cancer Centers Support; 93.398, Cancer Research Manpower; 93.399, Cancer Control, National Institutes of Health, HHS)

Dated: February 4, 2010.

Jennifer Spaeth,

Director, Office of Federal Advisory Committee Policy.

[FR Doc. 2010–3189 Filed 2–18–10; 8:45 am]

BILLING CODE 4140–01–P

DEPARTMENT OF HEALTH AND HUMAN SERVICES

National Institutes of Health

National Cancer Institute; Notice of Closed Meetings

Pursuant to section 10(d) of the Federal Advisory Committee Act, as amended (5 U.S.C. App.), notice is hereby given of the following meetings.

The meetings will be closed to the public in accordance with the provisions set forth in sections 552b(c)(4) and 552b(c)(6), Title 5 U.S.C., as amended. The grant applications and the discussions could disclose confidential trade secrets or commercial property such as patentable material, and personal information concerning individuals associated with the grant applications, the disclosure of which would constitute a clearly unwarranted invasion of personal privacy.

Name of Committee: National Cancer Institute Special Emphasis Panel; The Early Detection Research Network: Clinical Validation Centers.

Date: March 17, 2010.

Time: 8 a.m. to 5 p.m.

Agenda: To review and evaluate grant applications.

Place: Legacy Hotel and Meeting Center, 1775 Rockville Pike, Rockville, MD 20852.

Contact Person: Lalita D. Palekar, PhD, Scientific Review Officer, Special Review and Logistics Branch, Division of Extramural Activities, National Cancer Institute, 6116 Executive Boulevard, Room 7141, Bethesda, MD 20892, 301–496–7575, *palekarl@mail.nih.gov.*

Name of Committee: National Cancer Institute Special Emphasis Panel; NCI Cancer Nanotechnology Training (R25) and Career Development Award (K99/R00) Applications.

Date: March 23–24, 2010.

Time: 8 a.m. to 5 p.m.

Agenda: To review and evaluate grant applications.

Place: Hilton Washington/Rockville, 1750 Rockville Pike, Rockville, MD 20852.

Contact Person: Jeannette F Korczak, PhD, Scientific Review Administrator, Resources and Training Review Branch, Division of Extramural Activities, National Cancer Institute, NIH, 6116 Executive Blvd., Room 8115, Bethesda, MD 20892, 301–496–9767, *korczakj@mail.nih.gov.*

(Catalogue of Federal Domestic Assistance Program Nos. 93.392, Cancer Construction; 93.393, Cancer Cause and Prevention Research; 93.394, Cancer Detection and Diagnosis Research; 93.395, Cancer Treatment Research; 93.396, Cancer Biology Research; 93.397, Cancer Centers Support; 93.398, Cancer Research Manpower; 93.399, Cancer Control, National Institutes of Health, HHS)

Dated: February 4, 2010.

Jennifer Spaeth,

Director, Office of Federal Advisory Committee Policy.

[FR Doc. 2010–3191 Filed 2–18–10; 8:45 am]

BILLING CODE 4140–01–P

DEPARTMENT OF HEALTH AND HUMAN SERVICES

Centers for Disease Control and Prevention

Statement of Organization, Functions, and Delegations of Authority

Part C (Centers for Disease Control and Prevention) of the Statement of Organization, Functions, and

Delegations of Authority of the Department of Health and Human Services (45 FR 67772–76, dated October 14, 1980, and corrected at 45 FR 69296, October 20, 1980, as amended most recently at 74 FR 68630–3 1, dated December 28, 2009) is amended to reflect the establishment of the Office of Noncommunicable Diseases, Injury and Environmental Health.

Section C–B, Organization and Functions, is hereby amended as follows:

After the mission statement for the Centers for Disease Control and Prevention (C), delete the title and insert the following:

Office of Noncommunicable Diseases, Injury and Environmental Health (CU). The mission of the Office of Noncommunicable Diseases, Injury and Environmental Health (ONDIEH) is to reduce the burden of noncommunicable diseases, injuries, disabilities and environmental health hazards.

Office of the Director (CUA). (1) Advises the CDC Director on issues related to noncommunicable diseases, injury prevention, disability, and environmental health; (2) provides overall strategic direction and leadership for noncommunicable diseases, injury prevention, disability and environmental health; (3) promotes and supports noncommunicable diseases, injury prevention, disability, and environmental health related science, policies and programs; and (4) identifies, facilitates, and promotes cross center and cross-agency collaboration, innovation, and new initiatives related to noncommunicable diseases, injury prevention, disability, and environmental health.

Dated: February 3, 2010.

William P. Nichols,

Acting Chief Operating Officer, Centers for Disease Control and Prevention.

[FR Doc. 2010–3069 Filed 2–18–10; 8:45 am]

BILLING CODE 4160–18–M

DEPARTMENT OF HEALTH AND HUMAN SERVICES

Food and Drug Administration

[Docket No. FDA–2009–N–0376]

Office of the Commissioner Reorganization; Statement of Organizations, Functions, and Delegations of Authority

AGENCY: Food and Drug Administration, HHS.

ACTION: Notice.

SUMMARY: The Food and Drug Administration (FDA) is announcing the reorganization of the Office of the Commissioner (OC). This reorganization includes the organizations and their substructure components as listed in this document. This notice was previously published in the **Federal Register** of August 18, 2009, but it contained several errors. For the convenience of the reader, the reorganization is being published again in its entirety.

FOR FURTHER INFORMATION CONTACT: Vanessa Starks, Office of Management Programs (HFA–400), Food and Drug Administration, 5600 Fishers Lane, rm. 6B–42, Rockville, MD 20857, 301–827–1463.

SUPPLEMENTARY INFORMATION: In the **Federal Register** of August 18, 2009 (74 FR 41713), FDA published a notice announcing the reorganization of the Office of the Commissioner (OC). This reorganization includes the realignment of four Deputy-level offices within OC. They are as follows: (1) The Office of the Chief Scientist; (2) the Office of Administration (formerly titled the Office of Operations); (3) the Office of Foods; and (4) the Office of Policy, Planning and Budget (formerly titled the Office of Policy, Planning and Preparedness).

Office of Chief of Staff: The Office of Chief of Staff will advise and provide integrated policy analysis and strategic consultation to the Commissioner, the Principal Deputy Commissioner, Deputy Commissioners, and other senior FDA officials on activities and issues that affect significant agency programs, projects and initiatives. Often this function involves the most difficult problems, crisis situations and extremely complex issues of the Agency. This Office will include the Executive Secretariat Staff. This Office will report directly to the Commissioner.

Office of Legislation: The Office of Legislation will be restructured from the Office of the Chief of Staff. The Office of Legislation will report directly to the Commissioner and have an indirect reporting relationship to the Deputy Commissioner for Policy, Planning and Budget.

Office of Policy, Planning and Budget: The Office of Policy, Planning and Budget will be retitled from the Office of Policy, Planning and Preparedness. The Office of Policy, Planning and Budget will be restructured to consist of the Office of Policy, the Office of Planning and the Office of Budget (formerly the Office of Budget Formulation and Presentation). The Office of Policy will consist of the Policy Development and Coordination Staff, Regulations Policy and Management Staff, and Regulations Editorial Section. The Office of Planning will consist of the Planning Staff, Evaluation Staff, Economic Staff, Risk Communication Staff, and Business Process Planning Staff. The Office of Policy, Planning and Budget will report directly to the Commissioner.

Office of the Counselor to the Commissioner: The Office of the Counselor to the Commissioner will be established to formulate and render advice to the Commissioner that is related to policy development, interpretation, and integration that cuts across program lines or which is not well defined. This Office will include the Office of Crisis Management. The Office of the Counselor to the Commissioner will report directly to the Commissioner.

Office of Women's Health: The Office of Women's Health will be realigned from the Office of the Chief Scientist, Office of Science and Health Coordination. The Office of Women's Health will report directly to the Commissioner.

Office of Special Medical Programs: The Office of Special Medical Programs is a newly created Office within OC with functions and substructure realigned from components of existing offices. The Office of Special Medical Programs will consist of the following components: Office of Pediatric Therapeutics, Office of Combination Products, Office of Orphan Product Development, and Office of Good Clinical Practice (formerly titled the Good Clinical Practice Program) which all will be realigned from the Office of the Chief Scientist. The Office of Special Medical Programs will also include the Advisory Committee Management and Oversight Staff (formerly in the Office of Policy, Planning, and Preparedness). This Office will report directly to the Commissioner.

Office of External Affairs: The Office of External Affairs will be established to serve as a focal point for improving FDA's communications to media, Congress, and the general public; and to also advise the Commissioner on better internal communications within the Agency. This Office will consist of the Office of External Relations, the Office of Public Affairs and the Office of Special Health Issues. This Office will report directly to the Commissioner.

Office of Foods: The Office of Foods will be established to elevate and empower our food safety activities. This office, led by the Deputy Commissioner for Foods, will provide executive leadership and management to all FDA food programs, and will be accountable

to the Commissioner for integrating the efforts of all food-related programs in FDA, and for making optimal use of all available resources and methods to improve the safety, nutritional quality, and labeling of the food supply. The Office of Foods will provide executive leadership and management to the Center for Food Safety and Applied Nutrition and the Center for Veterinary Medicine (CVM). This Office will report directly to the Commissioner.

Office of the Chief Scientist: The Office of the Chief Scientist will be restructured to facilitate the agency's focus on scientific innovation, recruiting a new generation of scientists, better utilizing our toxicological research center and improving our computing support for our scientific programs. This office will be led by the Chief Scientist. The offices within the Office of the Chief Scientist are as follows: The Office of Counter-Terrorism and Emerging Threats, Office of Critical Path Programs, the newly established Offices of Scientific Integrity and Science and Innovation. Additionally, the National Center for Toxicological Research has a direct reporting relationship to OC and an indirect reporting relationship to the Chief Scientist.

Office of Administration: The Office of Operations will be retitled the Office of Administration. The Office of Administration will focus on enhancing agency-wide administrative operations and overseeing a variety of agency-wide management programs, information management, financial and shared services operations, as well as OC's executive operations. The new substructure of the Office of Administration consists of the Office of Acquisitions and Grants Services, the Office of Executive Operations, establishment of the Office of Financial Operations, the Office of Information Management and the Office of Management. The Office of Equal Employment Opportunity and Diversity Management will report directly to the Commissioner with a day-to-day operational relationship to the Deputy Commissioner for Administration.

Center for Tobacco Products: The Center for Tobacco Products will be established to address the enactment of the Family Smoking Prevention and Tobacco Control Act. This Office will consist of the Office of the Center Director, Office of Management, Office of Policy, Office of Regulations and Office of Science. This Center will report directly to the Commissioner.

[Part D, Chapter D-B, (Food and Drug Administration), the Statement of Organization, Functions, and Delegations of Authority for the Department of Health and Human Services (35 FR 3685, February 25, 1970, and 60 FR 56605, November 9, 1995, 64 FR 36361, July 6, 1999, 72 FR 50112, August 30, 2007) is amended to reflect the restructuring of the Office of the Commissioner (OC), Food and Drug Administration (FDA) as follows].

I. Under Part D, Food and Drug Administration, delete the Office of Commissioner in its entirety and replace with the following:

DA.10 ORGANIZATION. The Food and Drug Administration (FDA) is headed by the Commissioner of Food and Drugs, and includes the following organizational units:

Office of the Commissioner
Office of the Chief Counsel
Office of the Chief of Staff
Office of Legislation
Office of Policy, Planning and Budget
Office of Counselor to the Commissioner
Office of Women's Health
Office of Special Medical Programs
Office of External Affairs
Office of Foods
Office of the Chief Scientist
Office of International Programs
Office of Administration
Office of Equal Employment Opportunity and Diversity Management
Center for Tobacco Products

DA.20 FUNCTIONS.

Office of the Commissioner: The Office of the Commissioner (OC) includes the Commissioner, Principal Deputy and Deputy Commissioners who are responsible for the efficient and effective implementation of the FDA mission.

Office of the Chief Counsel: The Office of the Chief Counsel (OCC) is also known as the Food and Drug Division, Office of the General Counsel, Department of Health and Human Services. While administratively within the Office of the Commissioner, the Chief Counsel is part of the Office of the General Counsel of the Department of Health and Human Services (DHHS).

1. Is subject to the professional supervision and control of the General Counsel, DHHS, and represents FDA in court proceedings and administrative hearings with respect to programs administered by FDA.

2. Provides legal advice and policy guidance for programs administered by FDA.

3. Acts as liaison to the Department of Justice and other Federal agencies for programs administered by FDA.

4. Drafts or reviews all proposed and final regulations, **Federal Register** notices and other documents prepared by FDA.

5. Performs legal research and gives legal opinions on regulatory issues, actions, and petitions submitted to FDA.

6. Reviews proposed legislation affecting FDA that applies to DHHS or on which Congress requests the views of DHHS.

7. Provides legal advice and assistance to the Office of the Secretary on matters within the expertise of the Chief Counsel.

Office of the Chief of Staff:

1. Advises and provides integrated policy analysis and strategic consultation to the Commissioner, Principal Deputy, and Deputy Commissioners, and other senior FDA officials on activities and issues that affect significant agency programs, projects and initiatives. Often this function involves the most difficult problems, crisis situations and extremely complex issues of the agency.

2. Provides leadership, coordination and management of the Commissioner's priority policies and issues across the Office of the Commissioner and agency wide. Identifies, triages, supervises, and tracks related actions from start to finish in conjunction with senior leadership across FDA.

3. Serves as the principal liaison to DHHS and coordinates and manages activities between FDA and DHHS. Works with the FDA Centers/Offices to ensure assignments or commitments made related to these activities are carried out.

4. Provides direct support to the Commissioner, Principal Deputy, and Deputy Commissioners, and other FDA senior staff including briefing materials, background information for meetings, responses to outside inquiries, and maintenance and control of the Commissioner's working files.

5. Provides top level leadership and guidance on issues and actions tied to the Agency's communications with the Public Health Service (PHS), DHHS, and the White House, including correspondence for Assistant Secretary for Health and Secretarial signatures; controls for all agency public correspondence directed to the Commissioner; and the development and operation of tracking systems designed to identify and resolve early warnings and bottleneck problems with executive correspondence.

Executive Secretariat:

1. Advises the Commissioner and other key agency officials on activities that affect agency wide programs, projects, and initiatives. Informs appropriate agency staff of the decisions and assignments made by the Commissioner, Principal Deputy and

Deputy Commissioners, the Chief of Staff and the Associate Commissioners.

2. Develops and maintains management information necessary for monitoring the Commissioner's and agency's goals and priorities.

3. Assures that materials in support of recommendations presented for the Commissioner's consideration are comprehensive, accurate, fully discussed and encompass the issues involved.

4. Provides correspondence control for the Commissioner and controls and processes all agency public correspondence directed to the Commissioner. Develops and operates tracking systems designed to identify and resolve early warnings and bottleneck problems with executive correspondence.

5. Provides direct support to the Commissioner, Principal Deputy and Deputy Commissioners, Chief of Staff and Associate Commissioners including briefing materials, background information for meetings, responses to outside inquiries, and maintenance and control of the Commissioner's working files.

6. Performs agency-wide assignments involving complex problems and issues related to agency programs, strategies and activities, including preparation of special reports for the Department.

7. Coordinates the agency's communications with the Public Health Service, DHHS, and the White House including correspondence for the Assistant Secretary for Health and Secretarial signatures.

8. Serves as agency liaison to the Government Accountability Office (GAO) and the DHHS Office of the Inspector General (OIG) and coordinates agency engagement on GAO and OIG studies.

Office of Legislation:

1. Advises and assists the Commissioner and other key agency officials concerning legislative needs, pending legislation and oversight activities that affect FDA.

2. Serves as the focal point for overall legislative liaison activities within FDA and between FDA, DHHS, PHS and other agencies; and analyzes the legislative needs of FDA and drafts or develops legislative proposals, position papers, and departmental reports on proposed legislation for approval by the Commissioner.

3. Advises and assists members of Congress and congressional committees and staffs in consultation with the Office of the Secretary on agency actions, policies, and issues related to legislation which may affect FDA.

Office of Policy, Planning and Budget:

1. Advises the Commissioner and other key agency officials on matters relating to agency policy, regulations development, legislative issues, budget formulation, risk communication, and planning and evaluation activities.

2. Provides strategic policy direction, planning, and data-driven analysis for FDA to more effectively and efficiently protect and promote public health.

3. Develops significant and cross-cutting policy and engages in strategic problem solving.

4. Serves as FDA's focal point for the development, coordination, oversight, and processing of regulations, guidance and other policy documents.

5. Conducts economic analyses, program evaluations, and special studies.

6. Leads overall FDA strategic, performance and business process planning, including the development of performance measures.

7. Leads and coordinates agency-wide efforts to plan, evaluate and improve FDA risk communication.

8. Leads overall FDA budget formulation and presentation.

Office of Policy:

1. Leads Agency wide strategic policy initiatives.

2. Advises and assists the Commissioner and other key Agency officials on matters relating to agency policy, and on regulations and guidance development.

3. Serves as the lead Agency focal point for developing broad Agency policy.

4. Provides strategic policy direction and develops innovative policies for FDA to more effectively and efficiently protect and promote public health.

5. Develops significant and cross-cutting policy and engages in strategic problem solving.

6. Oversees, directs, and coordinates the Agency's rulemaking and guidance development activities.

7. Serves as the agency focal point for communications and policies with regard to development of regulations and guidance.

8. Initiates new and more efficient systems and procedures to accomplish Agency goals in the rulemaking and guidance development processes.

9. Reviews agency policy documents to ensure consistency in statements regarding agency policies.

10. Provides strategic policy direction for Agency budget formulation.

11. Works with the Office of Legislation to develop, coordinate and provide technical assistance on legislative proposals.

Policy Development and Coordination Staff:

1. Leads the development of cross-cutting or broad agency policies and serves as a cross-Agency think tank to develop innovative policies.

2. Advises and assists the Commissioner and other key Agency officials concerning information that may affect current or proposed FDA policies.

3. Advises the Commissioner and other key Agency officials on the formulation of broad Agency policy.

4. Engages in strategic problem solving.

5. Serves as Agency liaison for intergovernmental policy development.

6. Coordinates the development, review, and clearance of regulations and guidances.

7. Manages the Agency's regulation and guidance review and clearance processes.

8. Reviews policy documents to assess and achieve consistency in policies across documents.

9. Establishes procedures for Agency policy formulation and coordinates policy formulation activities throughout the Agency.

10. Negotiates the resolution of policy issues involving more than one component of the Agency.

11. Coordinates the review and analysis of policies.

12. Initiates and participates in interagency discussions on Agency regulations, plans, and policies to improve coordination of Federal, State, or local agencies on a specific regulation or in developing an effective alternative approach.

13. Serves on Agency task forces that are critical elements in the initiation, study, and resolution of priority policy issues.

Regulations Policy and Management Staff:

1. Serves as the Agency's focal point with DHHS, Office of Management and Budget, and other Federal agencies for policies and programs concerning regulations development and for the receipt of and response to other Agency comments on FDA policy documents.

2. Reviews proposed regulations, final regulations, and other Agency documents to be published in the **Federal Register.** Ensures regulations are necessary; consistent with established Agency policy; clearly written; enforceable; coordinated with other Agency components, the Office of the Chief Counsel, and Federal, State, and local government agencies; appropriately responsive to public participation requirements and applicable executive orders; and responsive to any applicable

requirements for assessment of economic and environmental effects.

3. Coordinates, with other Agency components, the evaluation of existing regulations to determine whether they are efficiently and/or effectively accomplishing their intended purpose. Identifies and makes recommendations to address regulations that require revision to correspond with current standards and those that should be revoked due to obsolescence.

4. Resolves regulatory policy disagreements between Agency components during the preparation of **Federal Register** documents.

Regulations Editorial Section:

1. FDA's official liaison within the Office of the **Federal Register.** Edits, processes, and prepares finished manuscript material for the issuance of Agency proposed and final regulations and other documents published in the **Federal Register.**

2. Provides all **Federal Register** document development support functions (including cross-referencing, record retention, incorporation by reference, document tracking, and Agency master print books of current Code of Federal Regulations (CFR) materials. Controls numbering and organization of Agency codified material to ensure proper structure of regulations being issued.

Office of Planning:

1. Leads Agency-wide strategic planning initiatives.

2. Advises and assists the Commissioner and other key Agency officials concerning the performance of the FDA planning, evaluation and economic analysis activities.

3. Develops program and planning strategy through analysis and evaluation of issues affecting policies and program performance.

4. Develops, installs, and monitors the Agency wide planning system including the long-term plans, strategic action plans, and program implementation plans.

5. Leads the FDA Strategic Planning Council.

6. Consults with and supports the Agency preparation of legislative proposals, budget proposals, proposed rulemaking and technical assistance to Congress.

7. Conducts operations research, economic, social science and special studies as a basis for forecasting trends, needs, and major problems requiring solutions, and provides assistance and consultation in these areas to operating units.

8. Evaluates impact of external factors on FDA programs, including industry economics, consumer expectations, and prospective legislation. As necessary, recommends new programs or changes in existing programs and program priorities.

9. Develops FDA evaluation programs and systems to evaluate overall FDA program accomplishments against objectives and priorities, recommending changes as necessary.

10. Estimates marginal impact of funding changes on FDA performance and ability to protect public health.

11. Leads effort to analyze Agency business processes for process modernization and bioinformatics support.

12. Coordinates the development of public health and program outcome measures, and monitors and reports on the status of those measures.

13. Leads and coordinates Agency-wide effort to plan, evaluate and improve FDA risk communication.

14. Leads and coordinates the Prescription Drug User Fee Act program initiative for Performance Management and quality systems studies.

Planning Staff:

1. Performs and coordinates the following Agency-wide performance planning functions:

a. Represents the Agency in DHHS and OMB performance planning activities.

b. Coordinates and reports the Agency's performance planning and achievements in accordance with the Government Performance and Results Act.

c. Consults with the Office of Budget and collaborates with Agency components in preparing and reporting the performance sections of the Agency's budget.

d. Coordinates the Agency long-range strategic and performance planning in line with the DHHS strategic plan.

e. Maintains, analyzes and reports Agency-wide performance information and achievements to external stakeholders.

2. Performs and coordinates the following Agency-wide program performance tracking and management functions:

a. Coordinates the development and improvement of the Agency's program performance measures, data and goals on a continuous basis to ensure alignment to Agency's missions and objectives.

b. Coordinates the Agency short and long range performance planning objectives and processes.

c. Assists and consults with Agency components in their performance planning for data, trends, targets and achievements.

d. Maintains, analyzes and reports Agency-wide quarterly program performance information.

3. Performs and coordinates program advisory, planning, and analysis services.

a. Assists agency components in analyzing and improving their planning processes, performance objectives and goals, as requested.

b. Works with Agency components as requested to identify and implement internal and external best practices to improve overall performance.

c. Analyzes information by applying mathematical disciplines and principles to make available data and facilitate improved decision-making.

d. Conducts special operational analysis and planning related studies as requested.

e. Conducts analysis of resource requests submitted by Agency components and develops recommendations for the Commissioner and Principal Deputy Commissioner, to fulfill Agency, DHHS and OMB requirements.

4. Staffs the FDA Strategic Planning Council.

5. Provides operations analysis and project management support to the Agency committees and initiatives as needed.

6. Provides operations analysis and project management support to the Prescription Drug User Fee program.

Evaluation Staff:

1. Prepares annual User Fee performance reports to Congress.

2. Performs Agency program and policy evaluations and analytical studies. Recommends alternative courses of action to increase effectiveness of Agency allocation of resources and to improve program and project performance.

3. Performs analyses of significantly broad Agency issues identified in the planning process. Recommends and/or implements steps to resolve these issues.

4. Develops the annual evaluation plan for the Agency and coordinates with DHHS.

5. Conducts special evaluations, analytical and economic-related studies, in support of Agency policy development and in resolution of broad Agency problems.

6. Evaluates the impact of external factors on Agency programs, including consumer expectations and prospective legislation.

7. Evaluates the impact of Agency operations and policies on regulated industries and other Agency constituents.

8. Provides process expertise to Agency components in designing

consensus sessions with internal and external stakeholders.

9. Assists and consults with Agency components on the design and execution of key program and process re-inventions.

10. Assists and consults with Agency scientific review components to enhance transparency, consistency, accountability, and continuous improvement of review processes.

11. Facilitates cross-organizational sharing of key program and process improvements.

Economics Staff:

1. Performs economic analyses and special studies for use by Agency officials in decisions regarding Agency policies.

2. Serves as the Agency's chief resource for economic information.

3. Collects and interprets economic data relevant to the Agency's public-health mission.

4. Performs and reviews cost-benefit and cost-effectiveness analyses of Agency regulations.

5. Advises and assists the Commissioner and other key Agency officials on a day-to-day basis concerning economic factors relating to current and proposed Agency activities.

6. Provides economic research material for use by Agency officials in preparing testimony before congressional committees and in developing replies to inquiries directed to the Agency.

7. Conducts economic studies of FDA-regulated industries as a basis for forecasting trends, needs, and major problems affecting the Agency.

8. Provides Agency representation to Congress, OMB, DHHS, and others, as appropriate, on economic issues relating to Agency regulations and other current and proposed actions.

Risk Communication Staff:

1. Coordinates development of Agency policies on risk communication practices.

2. Coordinates Agency strategic planning activities concerning risk communications.

3. Coordinates Agency research agenda for risk communication methods.

4. Facilitates development and sharing of risk communication best practices and standard operating procedures.

5. Conducts risk communications research on methodological and cross-cutting issues.

6. Leads management and coordination of the FDA Risk Communication Advisory Committee.

7. Staffs and co-leads FDA's Communications Council.

Business Process Planning Staff:

1. Coordinates the Agency's business process planning function in support of business process improvement and automation efforts.

2. Provides business process planning, operations analysis and project management support to the FDA Bioinformatics Board and its associated Business Review Boards.

3. Coordinates and maintains the strategic and performance layers of the Enterprise Architecture, in support of the Office of Information Management.

4. Establishes and maintains Agency standards for business process modeling.

5. Provides business process modeling, analysis, and planning services to Agency programs and initiatives as needed.

Office of Budget:

1. Plans, organizes, and carries out annual and multi-year budgeting in support of FDA's public health mission and programs.

2. Produces three major budget submissions a year DHHS in June, Office of Management and Budget (OMB) in September, and to Congress in February).

3. Develops and presents required background exhibits, MAX input, and supplemental budget requests as necessary; coordinates graphic material for presentations; and coordinates budget passback appeals at each level.

4. Coordinates appropriation hearing preparation for FDA leadership and conducts hearing follow-up related to transcripts, hearing questions and other hearing record inserts. Tracks Appropriation activities and bills affecting FDA resources through the legislative process.

5. Responds to requests for budget information and special reports and exhibits.

6. Reviews and analyzes potential budget impacts of congressional or administrative proposals, providing expert opinion and recommendations.

7. Clears documents leaving the Agency that have budget impact or resource information.

8. Tracks special initiatives and Agency cross-cutting programs.

Office of the Counselor to the Commissioner:

1. Formulates and renders advice to the Commissioner related to policy development, interpretation and integration that cuts across program lines or which is not well defined.

2. Provides a leadership role in advocating for and advancing the Commissioner's priorities.

3. Reviews recommendations for actions and reviews other materials to ensure that all points of view and program interests are developed for consideration and fully analyzed.

4. Provides top level leadership for the development and management of emergency and crisis management policies and programs for FDA to ensure that a structure exists for FDA to respond rapidly to an emergency or crisis situation in which FDA-regulated products need to be utilized or deployed.

5. Provides strategic oversight of FDA's participation in internal and external counter-terrorism and emergency exercises.

6. Oversees the coordination of the Agency's evaluation of emergency and crisis situations to determine appropriate internal and external referrals for further action.

Office of Crisis Management:

1. Serves as the first responder for FDA in emergency and crisis situations involving FDA-regulated products or in situations in which FDA-regulated products are needed to be utilized or deployed.

2. Assists in the development and management of emergency and crisis management policies and programs for FDA to ensure that a structure exists to respond rapidly to an emergency or crisis situation.

3. Serves as Agency emergency coordinator to DHHS Office of the Assistant Secretary for Preparedness and Response (OASPR) and as liaison to DHHS Secretary's Office of Security and Strategic Information (OSSI). Provides OASPR situational awareness of all FDA-related emergencies and ensures that FDA's emergency operations procedures are in alignment with national and DHHS procedures.

4. Participates in international initiatives to ensure FDA's capability and readiness to work with foreign counterparts in responding to international emergencies involving or impacting FDA-regulated products and to share information with international counterparts during such emergencies.

5. Manages the FDA Emergency Operations Network Incident Management System (EON IMS), a system for capturing large amounts of near real time information about emergencies related to FDA-regulated products for use by senior Agency decision makers in assessing and managing response activities. Provides Offices and Centers geographical information system (GIS) maps created by EON IMS's Geographical Mapping System GIS mapping component for use in strategic planning of Agency emergency response activities.

6. Develops and updates Agency emergency operations plans and incident specific annexes, ensuring their alignment and compliance with the National Response Framework (NRF) and its Emergency Support Functions and the National Incident Management System (NIMS).

7. Plans and conducts Agency exercises to test emergency operations plans. Plans and coordinates FDA's participation in emergency exercises sponsored by DHHS and other Departments and agencies, including national and international level exercises.

8. Develops agency training goals and initiatives to ensure that agency emergency response staff and senior officials are informed of the operational requirements of the NRF, NIMS, national level exercise programs and other national emergency plans and preparedness efforts.

9. Oversees the FDA Emergency Call Center which provides after normal hours service for responding to public inquiries and reports related to FDA-regulated products as well as surge capacity service for managing increased volumes of inquiries due to an event involving an FDA-regulated product.

10. Manages FDA's Emergency Operations Center (EOC), activating the EOC with augmented staffing from relevant Centers and Offices to monitor emergency situations, triage complaints and alerts, issue mission assignments to organizational components, coordinate overall Agency response operations, and communicate with external partners requesting technical and material support. FDA's EOC serves as the central point of contact with the Department of Homeland Security's National Operations Center, DHHS Secretary's Operations Center, CDC Emergency Operations Center, USDA/FSIS Situation Room, and other Federal EOCs as appropriate.

11. Coordinates Agency evaluation of emergency responses and crisis situations to determine appropriate internal and external referral for further action and recommended changes in Agency procedures.

12. Oversees and tests the Agency's ability to communicate through the Government Electronic Telecommunications Service (GETS) which provides global telecommunications (secure voice, facsimile and data communications) capability for organizations that perform national security and emergency preparedness functions.

13. Oversees the work of the Office of Emergency Operations.

Office of Emergency Operations:

1. Serves as the Agency focal point for emergency preparedness and response operating the 24-hour, 7-day-a-week emergency response system.

2. Provides support and assistance to FDA offices in managing the Agency's response to emergency incidents and situations involving FDA-regulated products and disasters.

3. Assists in the development and coordination of the Agency's emergency preparedness and response activities.

4. In direct coordination with individual headquarters and field emergency coordination units, serves as the Agency focal point for the review and analysis of preliminary information about threats and hazards, and assists in the early recognition of emergencies, outbreaks, natural disasters, and terrorism or other criminal acts.

5. Coordinates FDA emergency activities with other Federal agencies, State, local and foreign government officials and industry associations.

6. Identifies and advocates emergency training needs for FDA personnel and participates in the design, implementation, and presentation of the training programs.

7. Provides guidance to Agency emergency response staff in the use of the Incident Command System to manage single or multi-Agency response activities.

8. Represents the Agency at interAgency, intraAgency, State, local and foreign government and industry association meetings and conferences on emergency preparedness and response.

9. Manages the National Consumer Complaint System which monitors reports of problems with FDA-regulated products for potential emergencies.

10. Participates in daily National Biosurveillance Integration Center conference calls sponsored by Department of Homeland Security to provide a secure forum for interAgency information sharing for early recognition of biological events of national concern, both natural and man-made, to make a timely response possible.

11. Responsible for staffing the operation of FDA's Emergency Operations Center when activated.

Office of Women's Health:

1. Serves as the principal advisor to the Commissioner and other key Agency officials on scientific, ethical, and policy issues relating to women's health.

2. Provides leadership and policy direction for the Agency regarding issues of women's health and coordinates efforts to establish and advance a women's health agenda for the Agency.

3. Monitors the inclusion of women in clinical trials and the implementation of guidelines concerning the representation of women in clinical trials and the completion of sex/gender analysis.

4. Identifies and monitors the progress of crosscutting and multidisciplinary women's health initiatives including changing needs, areas that require study and new challenges to the health of women as they relate to FDA's mission.

5. Serves as the Agency's liaison with other agencies, industry, professional associations, and advocacy groups with regard to the health of women.

Office of Special Medical Programs:

1. Serves as the Agency focal point for special programs and initiatives that are cross-cutting and clinical, scientific, and/or regulatory in nature.

2. Provides for the coordination of internal and external review of pediatric science, safety, ethics and international issues as mandated by law and Agency activities.

3. Oversees the implementation of the orphan products provisions of the Federal Food, Drug and Cosmetic Act.

4. Provides executive leadership to the Office of Good Clinical Practice.

5. Oversees the functions of the Office of Combination Products as provided in Federal Food, Drug and Cosmetic Act.

6. Leads Advisory Committee Oversight and Management Staff, working in close collaboration with all FDA Centers to provide consistent operations and seek continuous improvements in the Agency advisory committee program.

7. Serves as the liaison on advisory committee issues with the Office of the Secretary, the DHHS Committee Management Office, all of FDA's Center advisory committee support staff, and other organizations/offices within FDA.

8. Ensures that all FDA committee management activities are consistent with the provisions of the Federal Advisory Committee Act, the Federal Food, Drug, and Cosmetic Act, ethics provisions in the criminal code, departmental policies, and related regulations and statutes.

Office of Good Clinical Practice:

1. Advises and assists the Commissioner, and other key officials on Good Clinical Practice (including human subject protection) issues arising in clinical trials regulated by the FDA that have an impact on policy, direction, and long-range goals.

2. Supports and administers FDA's Human Subject Protection (HSP)/Bioresearch Monitoring (BIMO) Council that manages and sets Agency policy on Good Laboratory Practices, Bioresearch

Monitoring, and Good Clinical Practices.

3. Represents the Agency to other government agencies, State and local governments, industry, academia, consumer organizations, Congress, national and international organizations, and the scientific community on Good Clinical Practice policy issues.

4. Provides leadership and direction on human subject protection and Good Clinical Practice matters and stimulates the application of these principles in the FDA.

5. Evaluates the adequacy of Good Clinical Practice resources available to the Agency and initiates action as appropriate.

6. Coordinates Agency policies related to the protection of human subjects in research, including institutional review and ethical considerations.

7. Plans training programs for external use and for FDA staff on the Agency's Good Clinical Practice policies.

8. Coordinates and provides oversight of Good Clinical Practice policy working groups developed on the recommendation of the Agency HSP/BIMO Council.

9. Fosters the science of bioresearch monitoring within the Centers and the Office of Regulatory Affairs and coordinates for OC.

10. Serves as the Agency coordinating point for Good Clinical Practice regulation, harmonization, and outreach activities.

11. Serves as liaison between the Agency's HSP/BIMO Council and the Agency's Management Council.

12. Coordinates and assists in implementation of regulations, policies, operational initiatives, and program priorities related to clinical bioresearch monitoring as developed by the HSP/BIMO Council.

13. Monitors Agency activities and leads the development of a quality assurance and quality improvement program to ensure uniform application of clinical bioresearch monitoring policies across the agency.

14. Serves as a liaison with other Federal agencies and outside organizations, the regulated industry, and public interest groups on clinical bioresearch monitoring policy and regulatory matters.

Office of Combination Products:

1. Serves as the Agency focal point for combination products (i.e., drug-device, drug-biologic, device-biologic or drug-biologic-device products).

2. Serves as the Agency Product Jurisdiction Office and administers 21 CFR part 3 (i.e., when classification or assignment is unclear or in dispute, classifies products as biologics, devices, drugs or combination products and assigns them to the Agency centers with primary jurisdiction).

3. Advises the Commissioner and other key Agency officials on policy formulation, execution, cross-cutting and precedent setting issues involving combination products and involving the classification of products as biologics, devices, drugs, or combination products.

4. Develops regulations, guidances, policies, procedures, and processes to facilitate classification and assignment of biologics, devices, drugs, and combination products, and to facilitate the Agency's regulation, review, and oversight of combination products.

5. Reviews and updates agreements, guidance or practices specific to classification or assignment of products as biologics, devices, drugs or combination products.

6. Serves as the focal point for employees and stakeholders to resolve issues arising during assignment and premarket review of combination products.

7. Ensures consistency and appropriateness of postmarket regulation of like products to the extent permitted by law and serves as the focal point for employees and stakeholders to resolve issues relating to postmarket regulation of such products.

8. Ensures timely and effective premarket review of combination products by overseeing the timeliness of Intercenter consultations and assisting reviews involving more than one Agency Center when necessary.

9. Prepares annual reports to Congress on the activities and impact of the Office.

Office of Orphan Products Development:

1. Manages the implementation of the provisions of the Orphan Drug Act and its amendments as well as implementation of provisions of the statute related to humanitarian devices and pediatric devices and manages a program to encourage the development of drugs of limited commercial value for use in rare or common diseases and conditions.

2. Develops and communicates Agency policy and makes decisions on approval of sponsor requests and incentives under the Federal Food, Drug, and Cosmetic Act, including orphan drug protocol assistance per section 525, orphan drug designation per section 526, orphan drug exclusivity per section 527, orphan drug grants and contracts to support clinical research and other areas of Agency policy related to the development of products for rare disorders.

3. Represents the Commissioner or serves as the Agency's principal authority and spokesperson to governmental committees, industry, foreign regulatory bodies, professional organizations, patient advocates, and consumer associations requesting Agency participation in orphan product development activities.

4. Reviews investigational new drug and biologics applications and investigational device exemptions to locate the existence of products under investigational study that show promise for effectiveness for rare or common diseases but lack commercial sponsorship. Assists sponsors, researchers, and investigators in communicating with Agency regulatory officials and expediting solutions to problems in obtaining investigational or market approval status.

5. Manages an extramural program of clinical research and consortia programs to evaluate safety and effectiveness of orphan products by funding grants and contracts, requesting applications for funding, organizing peer review of applications, monitoring and guiding investigators, and evaluating study results.

Office of Pediatric Therapeutics:

1. Coordinates and facilitates all activities of the FDA that may have any effect on the population, the practice of pediatrics, or may in any way involve pediatric issues.

2. Coordinates and communicates the review of pediatric adverse event reports for drugs, biologics and devices during the one-year period after the date of a labeling change.

3. Provides for the review of adverse event reports and other new safety information and obtains recommendations from sources such as the Pediatric Advisory Committee (PAC) regarding whether FDA should take action. Additionally, OPT coordinates action by the PAC for dispute resolution of pediatric safety labeling changes that are not agreed upon by the sponsor and the Commissioner not later than 90 days after referral

4. Coordinates with all DHHS and FDA employees who exercise responsibilities relating to pediatric therapeutics.

5. Serves as the FDA focal point for all issues involving ethics and science with respect to the pediatric populations.

6. Coordinates with the Office of International Programs while serving as the Agency focal point for international pediatric activities.

Office of External Affairs:

1. Advises the Commissioner and other key agency officials on FDA's communications to the media, Congress, and the general public on issues that affect Agency-wide programs, projects, strategies, partnerships and initiatives.

2. Advises and assists the Commissioner and other key officials on all public information programs; acts as the focal point for disseminating news on FDA activities and as a liaison with the Public Health Service and the DHHS on public information programs.

3. Advises the Commissioner, Deputy Commissioners and other senior staff throughout FDA on sensitive and controversial programs and initiatives that impact external stakeholder groups.

4. Serves as a liaison between FDA and health professional and patient advocacy, organizations to solve problems and address concerns these groups have with Agency policies and programs related to human medical product development and safety.

5. Coordinates and implements policies, programs and initiatives related to MedWatch, including the MedWatch website and e-list.

Office of External Relations:

1. Advises the Commissioner, Deputy Commissioners and other key Agency officials on Agency-level activities and issues that affect Agency wide programs, projects, strategies, partnerships, and initiatives.

2. Advises the Commissioner, Deputy Commissioners and senior staff throughout FDA on sensitive and controversial programs and initiatives that affect external stakeholder groups.

3. Oversees and directs the Agency's stakeholder-related communication functions to ensure coherence in decision making and the efficient operation of these functions internally and across Agency jurisdiction.

4. Serves as the Agency's focal point to provide direction, coordination and oversight of the Agency's consumer activities and serves as the Agency's focal point for national consumer groups, academia, trade associations, ethnic and minority groups, and Tribes.

5. Coordinates speaker requests for industry programs that cover multi-center issues; identifies potential conflict of interest speaker requests.

6. Assists in the programmatic design, development and planning with internal and external organizations regarding educational and informational activities intended to educate regulated industry

Communications Staff:

1. Serves as the Agency's focal point for consumer health communications activities. As such, manages the consumer health information section of the FDA Web site, *www.fda.gov*.

2. Creates and disseminates FDA consumer health information, which includes timely and easy-to-read articles, videos and photo slide shows containing the latest on all FDA-regulated products and practical wellness and prevention information to empower consumers.

3. Works closely with FDA centers and offices on developing effective consumer health communications strategies and programs.

4. Establishes and maintains partnerships with external organizations and conducts other activities to increase the reach of FDA consumer health information.

5. Acts as the Agency's public information liaison with DHHS for all publications and audiovisual needs; provides prepublication clearance of publications, exhibits, and audiovisual materials in accordance with procedures established by the Agency, PHS, DHHS, OMB, and the White House.

Office of Public Affairs:

1. Advises and assists the Commissioner and other key officials on all media information activities; serves as a liaison with the Public Health Service and DHHS on media information activities.

2. Serves as the Agency focal point for preparing, clearing, and disseminating press releases and other media statements representing Agency policy and responding to media inquiries; maintains liaison with news media.

3. Establishes policy for and coordinates all media information activities, including media requests, news interviews and responses to inquiries; prepares position and policy statements for use by Agency employees in responding to media questions; tracks issues of potential interest to the media.

4. Plans, develops, implements, and monitors policy and programs on Agency media relations, and consumer information and education programs conducted through the media, FDA's public affairs specialists, and other communications sources.

5. Delegates Freedom of Information (FOI) denial authority to FOI office for the Agency.

6. Directs the effective use of all management resources by coordinating the management, facilities, budget, and equipment resources for the Office of Public Affairs.

7. Reviews organizational, management, and administrative policies of the Office to appraise the efficiency and effectiveness of operations.

8. Identifies potential management problems and/or needs and plans.

9. Advises and assists top level Agency officials on all media matters involving media communications.

10. Plans, develops, and implements Agency wide multi-media strategies for disseminating regulatory and educational materials to the public through the media.

11. Plans and coordinates all multi-media training for the Agency.

12. Compiles and publishes to the FDA Web site the weekly FDA Enforcement Report; maintains the FDA Daily Clipping Service; and distributes the Daily Media Report to DHHS.

Web Communication Staff:

1. Responsible for directing the design, content management, usability, and evaluation of the FDA Website (*www.fda.gov*). Develops and interprets the Agency's Web policies, and serves as advocates for FDA's Web presence and catalysts for creative use of the Web by the Agency.

2. Works closely, as partners, with the FDA Office of Information Management (OIM), which is responsible for the technical operations of FDA's Web site.

3. Serves as the focal point and contact with the Agency, DHHS, and other Federal Government Web site programs and operations.

4. Provides direction, strategic planning assistance, and management coordination on Agency Web site programs.

5. Works closely with the Web site contacts in each of the Centers and principal offices within OC to plan, coordinate, execute and evaluate the Agency's Web site operations.

6. Establishes, manages, and monitors the implementation of Agency standards and policies for information published on Agency Web sites.

7. Provides Web-related information management strategy input through a collaborative effort with OIM and the Web site communications and operations staffs in the centers and OC.

8. Designs, develops, implements, monitors, and manages information published on the Agency's Web site and external digital assets.

9. Delivers the Agency's messages to the public via the Agency's Web site and strategic online partnerships in the government, private, and non-profit sectors.

10. Directs Web 2.0 and social media services for the Agency and to the public.

Office of Special Health Issues:

1. Advises the Commissioner and other key FDA officials on matters related patient, patient advocacy, and health professional issues and concerns; serious and life-threatening diseases; minority health; and other special health issues

2. Serves as a liaison between FDA and health professional and patient advocacy organizations to solve problems and address concerns these groups have with Agency policies and programs related to human medical product development and safety.

3. Assists in the planning, administration, development, and evaluation of FDA policies related to patient advocacy and health professional organizations, serious and life-threatening diseases, and other special health issues

4. Provides internal coordination on FDA activities related to patient advocacy and health professional organizations, serious and life-threatening diseases, and other special health issues.

5. Serves as a focal point to coordinate contacts and activities between FDA and other Federal agencies to ensure effective coordination and communication regarding issues related to serious and life-threatening diseases and other special health issues.

6. Coordinates and implements policies, programs, and initiatives related to MedWatch including the MedWatch web site, and the MedWatch e-list.

7. Conducts outreach and education to health professionals, patients and the public to facilitate the reporting of serious harm and injury associated with the use of human medical products.

8. Prepares, reviews, updates, and disseminates medical product safety alerts and periodic safety labeling change summaries to patients, patient advocates, and health professionals.

9. Informs patients, patient advocates and health professional organizations of upcoming public meetings, policy issues, and proposed rules, so that they are aware of important issues and informed of opportunities to comment.

10. Assures that patient points of view are given a voice in drug development and policy issues that affect patient communities, through the patient representative and patient consultant programs.

Office of Foods:

1. Provides executive leadership and management to all FDA food-related programs.

2. Exercises, on behalf of the Commissioner, direct line authority over the Center for Food Safety and Applied Nutrition (CFSAN) and the Center for Veterinary Medicine (CVM).

3. Exercises, on behalf of the Commissioner, all food-related legal authorities that the Commissioner is empowered to exercise under the Federal Food, Drug, and Cosmetic Act, as amended, the Public Health Service Act, and other applicable laws.

4. Directs efforts to integrate the programs of CFSAN, CVM, and the Office of Regulatory Affairs (ORA) and thereby ensure the optimal use of all available FDA resources and tools to improve the safety, nutritional quality and proper labeling of the food supply.

5. Directs the development of integrated strategies, plans, policies, and budgets to build FDA's food-related scientific and regulatory capacities and programs, including recruitment and training of key personnel and development of information systems.

6. Represents FDA on food-related matters in dealings with the Office of the Secretary of DHHS, the Centers for Disease Control and Prevention, the U.S. Department of Agriculture, the White House and other elements of the executive branch.

7. Represents FDA on food-related matters in dealings with Congress.

8. In conjunction with the Office of International Programs, represents FDA on food-related matters in dealings with foreign governments and international organizations.

9. Directs FDA efforts to build an integrated national food safety system in collaboration with other Federal agencies and State and local governments.

10. Directs a program of public outreach and communications on food safety, nutrition, and other food-related issues to advance FDA's public health and consumer protection goals.

Office of the Chief Scientist:

Provides strategic leadership, coordination, and expertise to support scientific excellence, innovation and capacity to achieve FDA's public health mission. Key activities include:

1. Fostering development and use of innovative technologies to meet public health needs.

2. Supporting scientific excellence and the professional development of FDA scientists in all areas (i.e. population/statistical, review, laboratory and manufacturing sciences), including through the Commissioner's Fellowship Program, continuing education, and scientific interactions with universities and others.

3. Providing strategic leadership and support for high quality, collaborative, scientific activities that advance regulatory science and address important public health issues concerning FDA-regulated products, including their evaluation, quality, safety and effectiveness.

4. Providing support and guidance for the National Center for Toxicological Research to serve as a national FDA resource for mission driven regulatory science.

5. Providing cross-Agency scientific coordination (e.g., for emerging technologies, scientific issues involving multiple Agency components, standards coordination, the FDA Science Board, and science communication).

6. Supporting scientific outreach, training, and collaboration, including research, development and Critical Path activities that engage other Agencies, global regulatory partners, academia, innovators, and consumers.

7. Supporting science and public health activities to effectively anticipate and respond to counter-terrorism and emerging deliberate and natural threats (e.g. chemical, biological, radiological and nuclear) to U.S. and global health and security including through the Office of Counter-terrorism and Emerging Threats.

8. Providing core scientific leadership and technical expertise, and ensuring Agency capacity, for advanced bioinformatics activities needed to support FDA programs. Serve as an Agency and government resource for excellence, methods development, outreach and partnerships in advanced bioinformatics science.

9. Leading Agency efforts to protect and enhance scientific integrity, and, where substantive scientific differences of opinion arise and require review at the FDA level, addressing them through appropriate processes intended to protect both FDA's mission and the integrity of its science.

Office of Counter-Terrorism and Emerging Threats:

1. Develops and implements a comprehensive counter-terrorism strategy for FDA to identify and address gaps in current efforts to safeguard medical products from adulteration or disruption of supplies due to terrorist activities.

2. Develops and coordinates the implementation of crosscutting policies to facilitate the availability of safe and effective medical countermeasures against chemical, biological, radiological, and nuclear agents of concern.

3. Provides policy leadership for FDA's Emergency Use Authorization (EUA) activities for terrorism and public health emergencies, including emerging threats.

4. Develops and coordinates the implementation of comprehensive FDA plans and strategies for pandemic influenza preparedness and other emerging threats, in collaboration with the Centers and Offices and with external partners.

5. Provides policy leadership by promoting the goals and needs for counter-terrorism and other emerging threats in the Agency budgeting and priority-setting processes.

6. Coordinates the portfolio of FDA counter-terrorism and pandemic influenza policy and planning initiatives and serves as the point of entry to the Agency on counter-terrorism and emerging threats policy and planning matters.

7. On behalf of the Office of the Commissioner, facilitates intra- and interAgency communications on counter-terrorism policy and pandemic influenza preparedness.

Office of Critical Path Programs:

1. Serves as the nexus for cutting-edge, cross-center scientific and medical initiatives as well as policy development related to the Critical Path (CP) initiative and CP-related activities in the Office of the Commissioner.

2. Assists the Chief Scientist in planning, executing, and monitoring CP-related projects, including other agencies, academia, and industry as identified by the Office of the Commissioner and DHHS.

3. Performs project development, project management, and tracking, policy and document development and clearance, and related tasks as directed by the Chief Scientist.

4. Manages Critical Path-related internal and external outreach (e.g., presentations, reports, videos (DVDs), pod casts, brochures, editorials, PR (public relations), Press kits, CPI (Critical Path Initiatives) Web site updates, FDA intranet) across all communications platforms.

5. Supports cross-center bioinformatics activities, including activities related to data management and analysis and safety surveillance of FDA-regulated products. Supports Agency Bioinformatics Board and Data Councils.

6. Coordinates administrative activities with CP (e.g., personnel, staffing, purchasing, and travel).

Office of Scientific Integrity:

1. Helps ensure consistent understanding, application and implementation of regulatory standards throughout FDA to ensure integrity and accountability of FDA functions and processes.

2. Provides advice and guidance to the Commissioner, Chief Scientist, and other key officials regarding premarket approval processes for all FDA-regulated products including requirements pertaining to applications, petitions, amendments and supplements; and product, processing, packaging and emerging product technologies.

3. Advises and assists senior FDA leadership in coordinating responses to allegations of patterns of deviations by FDA or its components from appropriate standards of conduct and performance. Also advises and assists senior FDA leadership in preventing such deviations.

4. Investigates and facilitates resolution of informal complaints and disagreements, whether generated internally or externally, with respect to the administrative processing of various applications for products regulated by the Agency as well as regarding the fair and even-handed application of Agency policy and procedures in this process.

5. Processes all formal appeals, or requests for review, that are submitted to the Office of the Commissioner, whether generated internally or externally, including requests for hearings, appeals from administrative actions, and requests to review decisions at a lower level of the Agency. Examples include, but are not limited to, requests to review decisions by the Centers, the Office of Regulatory Affairs, and elsewhere in the Office of the Commissioner under 21 CFR 10.75, appeals of formal or informal hearings, and Agency-level scientific dispute resolution matters.

6. Advises and assists the Chief Scientist and senior leadership in evaluating and resolving all formal appeals, requests for review, and requests for hearings submitted to the Office of the Commissioner and coordinates responses to such appeals and requests.

7. Develops regulations and procedures to promote an efficient and effective process for addressing and resolving formal appeals, requests for review, and requests for hearings, as well as any other types of disputes suitable for formal resolution in the Office of the Commissioner.

8. Determines whether an informal complaint should be construed and treated as a request for formal review by the Office of the Commissioner under established regulations or procedures.

9. Oversees and directs the Agency's ombudsman and appeals to ensure coherence in decision making and the efficient operation of these functions internally and across Agency.

Office of Science and Innovation:

Provides strategic leadership, coordination, infrastructure and support for excellence and innovation in FDA science that will advance the Agency's ability to protect and promote the health of the public. Key activities include:

1. Supporting high quality, collaborative scientific activities to address important public health and regulatory issues concerning FDA-regulated products, including their evaluation, quality, safety and effectiveness.

2. Supporting core scientific capacity and infrastructure.

3. Fostering development and use of innovative technologies in product development and evaluation.

4. Supporting excellence and the professional development of FDA scientists in all areas (i.e. population/statistical, review, laboratory and manufacturing sciences), including through the Commissioner's Fellowship Program, continuing education and professional activities (including clinical activities, cross center working groups, and other activities), and through scientific exchanges and interactions with universities and others.

5. Addressing scientific and public health priorities through support of high quality, peer reviewed scientific research, programs and related activities, both within and outside FDA and collaboratively, and through dissemination of new scientific information, methods and approaches.

6. Supporting scientific outreach, training, and collaboration in research and development activities that advance FDA's mission, that engage other agencies, global regulatory partners, academia, innovators, and consumers.

7. Seeking input from both FDA programs, stakeholders and outside advisors, including the FDA Science Board, to help define, review and meet FDA scientific needs and priorities to support our public health mission.

Office of International Programs:

1. Serves as the Agency leader and focal point for all international matters.

2. Serves as the primary Agency liaison with other U.S. Government components (involved in international issues), international multinational organizations and foreign governments (including Washington, DC embassies) for policy formulation and execution impacting FDA and FDA-regulated products.

3. Provides leadership to Agency program areas for international activities.

4. Serves as the focal point for the Agency and the final clearing authority for policies and procedures pertaining to international travel.

5. Serves as the focal point and final clearing authority for all international technical cooperation and assistance activities.

6. Serves as the Agency focal point and final clearing authority for all international programs and interactions (including meetings at FDA or abroad) with foreign counterpart regulatory agencies, international organizations, foreign embassies, all foreign officials, and with DHHS and all other U.S. Government components when international issues are involved.

7. Directs, manages, and leads Agency strategic planning, priority-setting and resource allocation processes for FDA international programs.

8. Serves as the Agency focal point and final clearing authority for trade issues involving e.g., North American Free Trade Agreement (NAFTA), World Trade Organization (WTO), Free Trade Area of the Americas (FTAA), Asia Pacific Economic Cooperation (APEC), and United States Trade Representative (USTR).

9. Serves as the Agency focal point and final clearing authority for formal arrangements with foreign governments e.g., memoranda of understanding (MOU), mutual recognition agreements (MRAs), exchange of letters, partnerships, equivalence issues, country assessments, and confidentiality commitments.

10. Serves as the Agency focal point and is the Agency final clearing authority on policies and procedures for sharing public and non-public information with international counterpart agencies, and, in conjunction with the Office of Regulatory Affairs, import/export policy issues.

11. Manages the Agency's foreign offices, including FDA staff deployed in foreign locations and all related budgeting, strategic planning, priority setting and resource allocation.

Office of Administration:

1. Provides executive direction, leadership, coordination, and guidance for the overall day-to-day administrative operations of the Agency assuring the timely and effective implementation and high quality delivery of services across the Agency and Centers.

2. Advises and assists the Commissioner, Principal Deputy Commissioner, Deputy Commissioners, and other key officials on various administrative management and business activities of the Agency.

3. Chairs all Agency user fee programs which oversees financial management and provides financial management support.

4. Assures that the conduct of Agency administrative and financial management activities, including budget, finance, acquisitions, information technology, human resources, organization, methods, and similar support activities, effectively support program operations Utilizes a call center to address all administrative and information technology management issues, and monitors and analyzes operational performance and customer satisfaction.

5. Plans, directs and coordinates a comprehensive financial management program for FDA encompassing the areas of automated financial systems, fiscal accounting, voucher audit, and financial reporting. Issues periodic reports regarding the status of FDA's financial management and develops financial inputs for the Agency's programs and financial plans.

6. Provides leadership and direction regarding all aspects of a variety of Agency management programs including organization management, OIG Liaison, delegations of authority, freedom of information, privacy act, and regulatory dockets management as well as programs related to ethics and conflict of interest matters.

7. Advises the Commissioner and other key Agency officials on administrative management and budget matters for components within the OC. Provides advice and guidance with regard to formulation and development of administrative management policies, procedures, and controls.

8. Provides advice and assistance to the Commissioner and senior management officials on information management resources and programs. Establishes and oversees implementation of the FDA information management policy and governance, procedures and processes to ensure the Agency is in compliance with the Clinger/Cohen Act. Establishes, directs and leads Agency level programs and all strategic aspects of information management including: information technology (IT) shared services, telecommunications, security, strategic planning, capital planning and investment control, and enterprise architecture.

Compliance Staff:

1. Develops plans, programs, and procedures designed to assure the prompt adjudication of complaints of alleged discrimination based on race, color, sex, age, religion, national origin, handicap, and sexual orientation.

2. Provides sign language interpreting services and manages the interpreting services contracts.

Conflict Prevention and Resolution Staff:

1. Provides confidential, informal assistance to employees and managers in resolving work-related concerns.

2. Develops and coordinates effective resolution processes and procedures.

3. Offers a variety of services and programs to address likely sources of conflict such as performance appraisals, harassment, mentoring relationships, and scientific collaboration.

4. Operates as a neutral, independent, and confidential resource providing informal assistance to FDA scientists, administrators, and support staff in addressing work-related issues. Assists in resolving conflicts and addressing concerns prior to and within established grievance processes.

5. Provides a neutral and impartial resource where employees can candidly discuss issues and explore options informally.

6. Provides alternative dispute resolution and mediation services as needed.

7. Develops and maintains training and technical assistance for Agency EEO specialists, counselors, special emphasis/program representatives, employees, supervisory personnel, and other key officials.

Diversity Staff:

1. Develops and oversees Agency diversity initiatives and the diversity databank.

2. Develops, implements, and monitors the Agency's Affirmative Employment Plan and directs the Agency's Affirmative Employment programs to achieve specific objectives.

3. Develops labor-management partnerships on EEO and diversity matters.

Office of Acquisitions and Grants Services:

1. Provides management direction and leadership for acquisitions, grants, cooperative agreements, technology transfers, and interAgency agreements.

2. Provides administrative management support to the four operational Divisions in the areas of budget execution; staff and organizational planning as well as advice and analysis of administrative policy and procedures in order to assist managers in accomplishing the mission of the organization.

3. Serves as the Agency focal point for developing, coordinating and implementing FDA policies and procedures pertaining to acquisitions, interAgency agreements, technology transfer and grants management; coordinates all administrative matters related to acquisitions, grants, cooperative agreements, interAgency agreements, memoranda of understanding and technology transfer.

4. Maintains liaison with DHHS on contracts and grants/assistance

management policy and procedural and operating matters.

5. Provides the oversight function to all levels of the Agency in the Small Business contracting program. Provides technical and policy guidance in all areas of the Agency printing management program.

6. Develops policy for printing to insure timely and cost effective implementation of the Agency printing program.

Division of Acquisition Operations:

1. Responsible for mission specific contracts and simplified acquisitions, including research and development requirements and lab supply and equipment requirements.

2. Responsible for acquisition of service contracts and simplified acquisitions, including but not limited to, furniture, security, events management, temporary services, moving, library support, custodial, etc.

Division of Acquisition Support and Grants:

1. Provides customer relation support and administration of acquisition systems.

2. Provides current policies and procedures to assist the FDA community to develop and transfer Federal technology to the commercial marketplace.

3. Negotiates, awards and monitors Federal funds awarded through various grant mechanisms.

4. Awards and administers Inter-Agency Agreements (IAGs). Assigns Memorandum of Understanding (MOU) tracking number and maintains MOU files.

5. Provides contract to support the State Contracts and Compliance Program. This program commissions the states to conduct inspections to ensure the quality and safety of the nations' food, animal feed and medical devices.

6. Responsible for acquisitions for the Office of Criminal Investigations.

Division of Acquisition Programs:

1. Responsible for formulating FDA-wide acquisition policies governing OAGS operational Divisions, providing advice and technical assistance on matters related to FDA acquisition programs, and monitoring the adoption of acquisition policies by the Department to ensure consistent policy interpretation.

2. Provides managerial oversight and administration of the Agency's purchase card program. Liaison with the bank, processing administrative functions, providing training and other assistance to ensure that participants understand their responsibilities under the program.

3. Responds to contract related FOIA requests, and ratifications of unauthorized procurements.

4. Provides field office and facility support, construction and renovation, architect/engineering services contracts and simplified acquisitions.

5. Plans and manages all contracting activities related to National Center for Toxicological Research (NCTR) acquisition programs.

Division of Information Technology:

1. Responsible for all information technology related contracts and simplified acquisitions related requirements.

Office of Executive Operations:

1. Develops policy and provides guidance, advice and oversight to OC staff with regard to programmatic FDA and OC programmatic and administrative management policies, procedures, and controls.

2. Advises the OC officials on the formulation and execution of administrative, financial and information management plans and activities affecting OC offices.

3. Manages the OC budget formulation and execution activities. Provides advice, guidance and direction on the administration of the OC budget.

4. Manages a variety of program administrative services including but not limited to travel, space, time and attendance, property, etc. for OC offices.

5. Establishes and maintains liaison with administrative staff throughout the OC to keep abreast of current policies and procedures.

6. Advises the OC offices on acquisitions and grants activities to ensure compliance with Agency and federal contracting policies.

7. Provides guidance and oversight concerning OC information management activities, including those related to activities of FDA Bioinformatics Board.

8. Develops policy on OC web activities and ensures compliance with Section 508 accessibility requirements.

9. Advises the Commissioner and Deputy Commissioners and other senior staff concerning all OC human capital programs and activities.

Office of Financial Operations:

1. Plans, directs, and coordinates a comprehensive financial management operations program for FDA encompassing the areas of budget analysis, execution, automated financial systems, fiscal accounting, internal financial audit, financial services related to accounts payable, travel support and payroll liaison, and financial reporting.

2. Provides staff assistance in justifying budgets through executive and congressional echelons. After appropriation, develops an orderly expenditure plan.

3. Administers and executes the Agency programs for accountable property management functions.

Office of Financial Management:

1. Plans, directs, and coordinates a comprehensive financial management program for FDA encompassing the areas of budget analysis, execution, automated financial systems, fiscal accounting, internal financial audit, and financial reporting.

2. Provides staff assistance in justifying budgets through executive and congressional echelons. After appropriation, develops an orderly expenditure plan.

3. Develops apportionment plans and issues allotments for expenditures.

4. Makes periodic reports regarding the status of FDA's financial management.

5. Develops financial inputs for the Agency's programs and financial plans.

Controls, Compliance, and Oversight Staff:

1. Ensures compliance with applicable Agency, Department, and/or Federal standards and policies.

2. Manages Office of Financial Management (OFM) contracts.

3. Manages the financial system investment and capital planning process.

4. Manages A–123 Program on behalf of the Agency.

5. Conducts advisory committee financial operation plan (FOP) reviews.

6. Supports upgrades to the Oracle-based financial system.

7. Manages OFM projects including the:

a. OFM Financial Managers Financial Integrity Act (FMFIA) report.

b. Most Efficient Organization (MEO) A–76 study.

c. Project management of Exhibit 52–Report on Resources for Financial Management Activities.

8. Oversees and coordinates access to financial systems.

Business Transformation, Administration and Management Staff:

1. Provides financial system training, workforce and organizational transition, and financial process documentation services, as well as internal communications.

2. Serves as the liaison to DHHS Division of Human Resources on OFM-related human resource issues.

3. Manages the ongoing administrative and management operations of OFM, including user provisioning for financial systems.

4. Provides administrative, human resources, and Agency guidance to OFM staff.

5. Supervises and coordinates the business transformation team's (BTT) activities across FDA.

6. Develops and tests the Office of Financial Management's (OFM) emergency preparedness to ensure the Agency's financial infrastructure and integrity.

7. Manages the change review board (CRB) for changes to business process and/or Unified Financial Management System (UFMS) and User Fee System modifications.

8. Supports testing required for maintenance, enhancements, and upgrades to OFM's financial and feeder systems.

User Fees Staff:

1. Manages and oversees the receipt, deposit, and allocation of user fees paid by industry.

2. Prepares annual revenue reports for submission to Congress.

3. Reports on FDA's compliance with Congressional mandates.

4. Develops, manages, and maintains user fee systems.

Financial Systems Support Staff:

1. Manages and provides technical and functional guidance associated with the Unified Financial Management System (UFMS), on behalf of the Agency and its components.

2. Ensures the financial integrity and stabilization of UFMS.

3. Coordinates month-end, quarter-end, and year-end close of financial operations within UFMS.

4. Tests new functionality of the financial system.

5. Serves as the liaison to FDA end users regarding UFMS issues.

6. Leads upgrades of UFMS across FDA.

Division of Accounting:

1. Prepares the Agency's financial statements for submission to DHHS and integration into the Department's consolidated financial statements.

2. Prepares and submits all required external reports required by the Department of the Treasury that report various accounting events.

3. Serves as liaison for the Agency's annual financial statement audit; coordinating various tasks from the Department and the auditors.

4. Responds to audit and A–123 findings by developing comprehensive corrective action plans to address deficiencies.

5. Reconciles all major sub-ledger accounts (such as accounts payable, financial balance with Treasury, suspense) to the Agency's general ledger.

6. Serves as Agency lead for financial policy oversight, review, and implementation.

7. Plans, evaluates and coordinates activities to ensure FDA is in compliance with Federal Government accounting policy and procedures.

8. Serves as Agency Property management Officer, reviewing and implementing property policy as well as managing the annual inventory.

9. Prepares various sub ledgers to general ledger reconciliations to ensure accuracy of financial data and identify possible issues that could impact operations.

10. Reconciles General Ledger's equipment account to Property Management Information System (PMIS) to ensure all capital personal property items are properly monitored and recorded.

11. Develops and modifies, as needed, all accounting procedures for FDA, both headquarters and field. Implement and control a reporting structure to track and measure performance against a variety of financial goals and objectives.

12. Processes IPAC payments for Inter Agency Agreements (IAGs).

Division of Budget Execution and Control:

1. Provides guidance and advice on the management and development of the budgets for FDA's Office of the Commissioner and Headquarters. Conducts analysis about Agency-level and cross-component accounts, trends, and projects. Interpret Agency requirements and establish FDA policy/procedures on all phases of budget execution.

2. Apportions funds appropriated by Congress among components and oversees transfers of funds between components.

3. Completes detailed reviews and analyses of components' financial operating plans at the end of each quarter. Ensures budgetary resources are used in a manner consistent with the Agency's mission and are not over spent or obligated beyond appropriate limits.

4. Manages key Agency-level accounts and shared costs, such as FDA rent and central accounts.

5. Assists in the preparation of historical budget-related data, congressional inquiries, and data for budget formulation and hearings.

6. Reviews and clears all Inter-Agency Agreements (IAG's) to assure that they comply with appropriation law and are included in FDA resource plans; monitor collection of reimbursable earnings and identify and solve related problems as necessary.

7. Maintains FDA staffing ceiling records, proposes ceiling adjustments as needed, monitors FTE usage, alerts management to potential overburn/underburn problems, and prepares recurring reports and special analyses as necessary on FTE levels.

8. Continuously surfaces, and provides recommendations and support to resolve PDUFA/MDUFMA issues (design status of funds and FTE reports; develop criteria to allocate collections). Maintains tracking system for allocating PDUFA/MDUFMA non-PDUFA, and AIDS funds, and prepare reports.

9. Conducts year-end closeout of appropriations with the Division of Accounting, FDA Centers and Offices. Prepares all necessary end-of-fiscal-year budget and staffing reports by organization and by program, and enter all past-year data.

Office of Financial Services:

1. Plans, directs, and coordinates day-to-day operations for financial services related to accounts payable, travel support and payroll liaison.

2. Manages the ITAS program, ensuring compliance and employee's time and attendance data, tests all system upgrades.

3. Provides training on ITAS and payroll policy to timekeepers and approvers.

Division of Payment Services:

1. Maintains liaison with the Program Support Center (PSC) and the Defense Financial Accounting System (DFAS) representatives on issues relating to pay and leave. Monitors the processes to ensure the successful payment to employees.

2. Resolves payroll errors and assists employees with pay problems; interprets policies and issues new procedures as needed.

3. Participates in reengineering the payroll process to streamline correction of errors and reduce first time errors; and participates in timekeeper training.

4. Processes and pays all accounts payable invoices (contract and purchase orders) in accordance of the Prompt Pay Act and various regulations and audit requirements. Maintains internal control over processing of transactions to accounts, including application of batch controls to ensure accurate coding and making necessary accounting transaction adjustments and corrections.

5. Monitors all phases of the payment records in the Unified Financial Management System (UFMS) for issues that might prevent payments to be processed.

6. Performs the daily batching processes required for transmission to Treasury.

7. Researches returned payments, reprocessing if needed.

8. Maintains roles and responsibilities to ensure conflict of interest adherence.

9. Troubleshoots and maintains additional vendor sites in UFMS.

10. Tracks and monitors contract invoices for required signatures.

11. Coordinates with vendor and center personnel in researching

payment information for issue resolution.

12. Responds to all vendor inquiries as well as inquiries from center personnel.

13. Prepares various reconciliations to ensure that schedules are properly accounted for and entered into the accounting system.

14. Reviews and distributes reports and processes corrections, as necessary.

15. Serves as liaison with the Department of Treasury to initiate check traces.

16. Coordinates, reconciles and posts all Impac Card payments into UFMS.

Division of Travel Services:

1. Oversees processing of vouchers and traveler's reimbursements.

2. Oversees the functional integrity of the GovTrip system.

3. Serves as liaison to the PSC eTravel Center of Excellence, Northrup Grumman and Omega.

4. Oversees and maintains the Agency's Travel Card and Centrally Billed Account Programs.

5. Creates, monitors and provides delinquency reports to program offices.

6. Monitors travel card holder activities for misuse, abuse or illegal activity, suspending cards if necessary.

7. Maintains UFMS traveler sites as requested.

8. Oversees post audit of travel vouchers.

9. Provides travel advice/guidance throughout the Agency, including significant research on Comptroller General Decisions; participates in training on travel procedures.

10. Oversees contractor processing of all headquarters and field Permanent Change of Station travel vouchers, processes complex tax calculations and IRS reports.

11. Processes and distributes required 1099 forms to employees that receive gift cards.

12. Field employees perform travel services directly for the Office of Regulatory Affairs (ORA) and the National Center for Toxicological Research (NCTR) to include NCTR travel, ORA international travel, Federal Agency Travel Administration (FATA) responsibilities, data calls, travel audits, 348 travel and conference reporting.

13. Processes travel for all State Employees working in tandem with ORA employees

Office of Information Management:

1. Develops the architecture, standards, policies, governance, best practices and technology road map that support the business priorities of the Agency, including managing information technology infrastructure, telecommunications, security, strategic planning, capital planning and investment control, enterprise architecture, and applications development and management.

2. Provides advice and assistance to the Commissioner and senior management officials on information technology resources and programs.

3. Establishes and oversees implementation of the FDA information technology policy and governance, procedures and processes to bring the Agency in conformance with the Clinger/Cohen Act and the Paperwork Reduction Act.

4. Provides leadership and direction regarding all aspects of the Agency records management program.

5. Works in full partnership with FDA business areas, develops and communicates the overall vision for the Agency's Information Technology (IT) program.

6. Provides expert technical evaluation and recommendations for the new and emerging technologies to ensure the Agency's IT program can proactively adjust to changing business needs and technology drivers.

7. Represents the Agency IT program on internal and external meetings and workgroups on Agency information technology programs and issues (e.g., DHHS, Chief Information Officer (CIO) Council, FDA Leadership Council, FDA Level Review Boards, etc.).

8. Establishes policies and procedures for system risk assessments and system business continuity and contingency planning.

Division of Business Partnership and Support:

1. Advocates, communicates, provides, and manages liaison services and provides management and technical consultation resources regarding information technology to FDA offices, centers and other FDA stakeholders, including parties external to FDA (non-government, e.g., PHRMA, BIO, DIA, ICH, etc) and PHS, Department, and other Federal government IRM and ADP operations.

2. Collaborates with other divisions within OIM to address Center/Office issues and topics in question coordinates with the appropriate parties to ensure project/investment formulation and execution.

3. Oversees the governance of IT program and project management activities of major IT initiatives following project management best practices (Project Management, System Development, and Enterprise Program life cycles), develops policies and procedures on all aspects of project planning, and interacts with and coordinates the implementation of DHHS EPLC processes.

4. Coordinates development of Center/Offices IT budget and provides support for budget execution and contract monitoring of information resources.

5. Oversees day-to-day operations of FDA web development, redesign, web content management system and web hosting environment.

6. Manages FDA Forms programs and is the lead for Agency Section 508 implementation and 508 guidance.

7. Receives user requests, orders, and desktop-related tools and equipment.

8. Manages and oversees help desk services and user support for and/or FDA-wide applications (excludes field help desk which is part of the Division for Infrastructure Operations).

Division of Chief Information Officer Support:

1. Establishes and maintains an Agency Enterprise Architecture (EA) governance structure that includes processes for systems, business, data, applications, technology, and security architectures.

2. Serves as a focal point within FDA and as a liaison between FDA and external public and private sector organizations regarding enterprise standards, IT architecture, investment management practices and related methodologies, data sharing and support services, and regarding all aspects of IT planning, development and management.

3. Develops, tracks and maintains the IT budget, operating plan, and acquisition plan. Manages and maintains an acquisition strategy policy and implements all aspects of contract administration and management for OIM.

4. Plans, organizes and manages FDA's IT investment management process (CPIC) to ensure that IT resources are acquired and managed effectively, and to ensure effective ongoing control of IT investments. Additionally, conducts architectural reviews of IT investments to ensure alignment with business functions, avoid duplication of effort, reduce costs, and improve the efficiency and effectiveness of IT initiatives and to ensure that the FDA IT enterprise employs appropriate standards.

5. Coordinates the Agency IT risk management program, including identification, analysis, and mitigation and reporting of program and system level weaknesses. The division also maintains and audits compliance for system risk assessments and system business continuity and contingency planning.

6. Establishes administrative policies for OIM consistent with Agency policies and manages all administrative activities including Administrative Support, Travel and Timekeeping.

7. Develops, maintains and manages the electronic records (e-records) policy within the Office of Information Management and coordinates as necessary with other business entities within the FDA on records management activities.

8. Provides management of all aspects of human capital in the recruitment, hiring, deployment, development, management, training and evaluation of the OIM workforce to ensure that human capital programs are aligned with organizational goals and Agency Human Resource requirements.

9. Develops and disseminates administrative internal communications and operational procedures for the OIM in coordination with the Communications Team. Keeps abreast of Agency and office rules, regulations, procedures, policies and decisions.

10. Develops and creates a variety of diverse graphic projects; prepares publications, pamphlets, scientific posters, design posters, display units, in-house laser award design/engraving and other custom art projects.

Division of Systems Management:

1. Designs, develops, implements, and maintains all Agency software applications, IT systems, systems support and maintenance, and their integration with other Federal agencies, State and foreign governments and public and private entities.

2. Establishes and implements an Enterprise IT Common Component Framework containing modules/services to be shared across FDA information systems and maintains FDA enterprise applications through effective evaluation, streamlined application development, monitoring, testing, and control of Agency-wide systems utilizing e-platform initiatives and interchangeable common components in order to support FDA business process needs and objectives efficiently and effectively.

3. Validates requirements for and directs the design, development and implementation of new system requirements, system enhancements and system maintenance changes for the Agency, performs systems analyses to develop and implement testing strategies, procedures and methodologies, especially automated varieties, and develops and implements system specifications, requirements, procedures and guidelines.

4. Designs, develops, implements, and maintains standards-based electronic IT data systems and repositories that provide the FDA with an integrated and interoperable information environment to receive, track, analyze, and disseminate knowledge on FDA business/program activities and directs the development and implementation of FDA Data Administration policies standards and procedures to ensure design consistency, including review of work products for compliance with standards.

5. Assists in the development and implementation of technical specifications and plans for procurement of IT equipment (HW/SW) and support resources required for the integrating of new system designs.

6. Develops and implements a program risk management plan to oversee and mitigate critical risks and vulnerabilities in the execution of the systems under its responsibility.

7. Assists CIO Support Division in development and maintenance of FDA's policies and procedures for independent verification and validation of IT systems. Develops, implements and provides problem management processes for the FDA systems, including trend analysis of problems. Develops standard IT reports.

Division of Infrastructure Operations:

1. Manages Agency wide LAN/WAN computer environment, including desktop, laptop, and Personal Digital Assistants (PDAs), as well as utilizing the computer environment for the development, testing, validation and integration of information technology applications throughout the Agency.

2. Oversees and manages day-to-day operations of all FDA telecommunications activities including VoIP and customer support, mailbox management and problem resolution related to FDA Email services.

3. Oversees day-to-day operations and performance of all FDA hardware, including IT resources such as electrical power, HVAC, etc.

4. Provides technical consultation to the Systems Division in identifying appropriate IT hardware, software and infrastructure requirements for new IT applications that support FDA business process needs.

5. Assists CIO Support's Procurement Team in development and implementation of technical specifications and plans for procurement of IT equipment, software and support services.

6. Manages and coordinates the integration of systems and business applications, including testing of the applications, and coordinates the execution of services acquired by FDA to implement new system design efforts and their underlying infrastructure into operations and maintenance.

7. Collaborates with the Systems Management Division on the development and implementation of technical standards, policies and procedures to ensure efficient operations and controls of FDA IT systems and that infrastructure services are developed and operated.

8. Conducts studies and analyses and performs capacity planning to determine appropriate IT hardware, software and infrastructure requirements. Ensures Agency infrastructure is kept up to date with FDA technology standards.

9. Manages and oversees user support for and/or FDA-wide applications for all FDA Field Offices, including the International Offices (excludes Washington Metro area help desk which is part of the Division of Business Partnership and Support).

Division of Technology:

1. Reviews and evaluates the appropriateness of new and emerging information technologies, including those with potential science and laboratory benefits and enterprise architecture, for incorporation into existing systems and applications and for use in future Agency supported initiatives.

2. Oversees the establishment and implementation of technology through an enterprise approach of common IT frameworks, connectivity and consistent practices, standards and policies to enable and support interoperability and consistency throughout the Agency.

3. Establishes and manages, through an enterprise approach, the development of standards, including governance for reusable templates, services and common functions for application development.

4. Interacts with DHHS, and other interAgency groups to guide and align FDA to Government-wide initiatives regarding information technology.

5. Regularly attends industry and other technology meetings to stay abreast of emerging trends and technologies.

6. Directs and implements the FDA information security program to ensure that security controls for hardware, software and telecommunications solutions are: effective, facilitate the continuity of operations for FDA information systems, protect privacy, confidentiality and availability of FDA data; that they manage system security policies and standards for FDA information systems enterprise-wide in accordance with the Agency, DHHS, GSA, OMB and other Federal Government security requirements.

7. Directs and responds to security audits and collaborates with assessment teams and other Agency groups to develop and implement corrective action plans.

8. Establishes and communicates policies and procedures for system risk assessments and system business continuity and contingency planning.

9. Oversees disaster recovery planning for data center operations and coordinates with other divisions within OIM to plan, monitor, and test recovery plans for all applications throughout FDA.

10. Develops and monitors scientific workstation standards. Designs and implements new IT methods and applications for scientific computing for Bioinformatics Board activities.

Office of Management:

1. Advises and assists the Commissioner, Deputy Commissioner, Associate Commissioners and other key Agency officials on various management and systems activities.

2. Assures that the conduct of Agency administrative, personnel, organization, and similar support activities effectively support program operations.

3. Provides leadership and direction regarding all aspects of a variety of Agency management programs, including ethics, dockets management, organization management, delegations of authority and special studies and projects for the Office of the Commissioner. Establishes Agency-wide policy and provides overall direction and leadership for the Freedom of Information (FOI) program and Privacy Act program.

4. Integrates the Agency's technical, programmatic and facilities requirements into the overall budgetary and development plan for the Agency's consolidation. Implements relocation planning needed to successfully transition the Agency into its new location.

5. Provides FDA's administrative services and facilities. Utilizes a call center to address all administrative and information technology management issues, and monitors and analyzes operational and customer satisfaction.

6. Provides leadership and direction regarding all aspects of Agency-wide human resources management including employment, recruitment, training, career development, partnership activities, quality of work life issues, and executive services.

7. Provides program, technical and resources management for the FDA White Oak consolidation, logistics and facilities operations and maintenance services.

8. Provides leadership and guidance to the Agency for all aspects of physical and personnel security including the suitability and National Security Information Program.

9. Manages and administers the suitability and security program as required by the Office of Personnel Management as set forth in "Suitability" (5 CFR part 731), and "National Security Positions" (5 CFR part 732). Monitors the appropriate security clearance levels for Agency positions, employees, and contract employees.

10. Processes clearance requests, reviews investigative reports/findings and makes suitability determinations based on investigative findings.

11. Develops and directs the Agency wide physical security programs and provides professional leadership and authoritative guidance.

12. Formulates policy and procedures necessary to maintain the integrity of privileged and trade secret information submitted by industry.

13. Develops and manages the Agency's contractor security program when Automated Data Processing services or non-public information is released under contract agreement.

14. Serves as the single point of contact and focus for the Operating Division's management of more than 800 PHS commissioned officers assigned to approximately 150 duty stations in 47 states.

15. Provides coordination between FDA management and the Assistant Secretary for Health's Commissioned Corps programs. Serves the FDA Centers, special assignments and details to other organizations and initiatives.

16. Develops and implements all policies for utilization of all PHS Commissioned Officers in FDA. Coordinates all orders, billets, Commissioned Officer Effectiveness Reports, promotions, and awards for commissioned officers.

Ethics and Integrity Staff:

1. Develops Agency policy and procedures implementing the "Standards of Ethical Conduct for Employees of the Executive Branch" (5 CFR part 2635) including the DHHS supplemental regulations (5 CFR part 5501). Monitors employee compliance with Federal regulations by reviewing employees' financial disclosure reports and outside activity requests. Reviews, prepares, evaluates and secures appropriate approvals for waivers and other determinations regarding financial interest, conflict of interest and other ethical issues. Counsels employees and provides authoritative advice on the statutory, regulatory, policy and procedural requirements regarding ethics and conflict-of-Interest issues. Develops and conducts training for supervisors, managers, administrative staff, special Government employees and other Agency employees. Provides oversight and direction to the Agency's Advisory Committee program as it relates to special government employees. Assures that conflicts of interest waivers are consistent, with relevant requirements, well-documented and timely. Evaluates cooperative agreements developed by Agency components under the Federal Technology Transfer Act and provides technical advice on any related conflict of interest matters.

2. Provides advice to employees to ensure their compliance with applicable regulations and statutes on the following: (1) "Standards of Ethical Conduct for Employees of the Executive Branch" (5 CFR part 2635); (2) "Supplemental Standards of Conduct for Employees of the Department of Health and Human Services" (5 CFR part 5501); (3) "Executive Branch Financial Disclosure, Qualified Trusts, Certificates of Divestiture" (5 CFR part 2634); and (4) Criminal Conflict of Interest Statutes—Chapter 11—Bribery, Graft, and Conflicts of Interest (Chapter 11 of Title 18 U.S.C.).

3. Serves as liaison with other FDA components and the Agency Office of General Counsel/Ethics Division to develop co-sponsorship agreements.

4. Provides executive and administrative support to the Conflict of Interest Review Board. Coordinates Board activities, prepares background materials, analyzes recommendations and other correspondence for Board members and participates in Board decisions. Implements decisions including advising affected employees of Board determinations.

Office of Business Operations and Human Capital Programs:

The Office of Business Operations and Human Capital Programs is responsible for planning and directing Agency management programs to include administering the FDA administrative policy programs. The following are specific functions within the Office:

1. Provides leadership and direction regarding all aspects of a variety of Agency management programs, including strategic human capital, organization management, delegations of authority, competitive sourcing, executive resources management, performance management, rewards and recognition, workforce development and succession planning.

2. Provides executive leadership and direction to coordinate and operationalize the Agency's business

process improvement initiatives to increase quality, productivity, and transparency.

3. Oversees the development, prioritization and implementation of business process improvement recommendations to provide predictable, consistent and efficient application of decision-making standards, increase internal and external process transparency resulting in process clarity for internal and external stakeholders and improve the overall operation and effectiveness of FDA resulting in productivity and efficiency gains.

Office of Management Programs:

Provides leadership and direction regarding all aspects of a variety of Agency management programs, including strategic human capital, organization management, delegations of authority, competitive sourcing, executive resources management, performance management, rewards and recognition, workforce development and succession planning, and special studies and projects for the Office of the Commissioner. The following are specific functions within the Office:

1. Provides management analysis support and advisory services to the Office of the Commissioner and other Agency components.

2. Serves as the Agency focal point for FDA's organizational management and delegations of authority program, including monitoring of the establishment, abolishment, modification, transfer or consolidation of Agency organizational components and their functional statements, and administering the Standard Administrative Code (SAC) system.

3. Provides direction and oversight for the Agency's Competitive Sourcing Program, including the development of the FAIR Act Inventory, evaluating the efficiencies of the Most Efficient Organization (MEO), establishing policies, and advising senior leadership.

4. Manages the Agency's human capital program, ensuring that human capital management programs are merit-based, effective, efficient and supportive of mission goals; alignment of human capital strategies with Agency mission/goals; assessing workforce staffing needs; ensuring continuity of effective leadership to manage programs and achieve goals; and identification of mission-critical competency gaps and strategies to close the gaps and hire/retain necessary talent.

5. Provides leadership, direction, policy development, and oversees the performance management programs covering the Senior Executive Performance Management Program and the Performance Management Appraisal Program.

6. Provides leadership, direction, policy development and program management for Agency workforce and succession planning activities.

7. Provides leadership, direction, policy development and program management for a variety of incentive programs, including recruitment, retention and relocation incentives, annual leave service credit, student loan program, Telework, etc.

8. Provides leadership, direction, policy development, program management, and training for special appointment authorities, including the Intergovernmental Personnel Act (IPA), Senior Executive Service (SES), Title 38, and Title 42, (including Service Fellowship, Senior Science Managers, and Senior Biomedical Research Service (SBRS)).

9. Provides leadership, direction, policy development and program management for compensation programs including the hiring and advancement within the Senior Executive Service (SES), SBRS, Title 38, Title 42, Service Fellowships, as well as waiver of overpayments, etc.

10. Assists the Office of the Chief Scientist in the management of peer review processes for scientific positions by: (1) Providing classification services for peer reviewed positions, and (2) providing staff support and advisory services for the SBRS.

11. Manages the Agency reward and recognition programs, including the Agency Honor Awards Program.

12. Provides leadership and direction to the Agency for meeting the government's competitive sourcing program outlined by OMB Circular A–76, Performance of Commercial Activities.

13. Provides strategic management of human capital in the recruitment, deployment, development and evaluation of the FDA workforce to ensure human capital programs and policies are aligned with organizational goals.

14. Provides leadership and direction on Agency workforce planning and succession planning activities.

15. Develops and coordinates the implementation of policies, procedures, and review activities for the Agency's peer review program. Provides classification services for research scientists, medical officers, consumer safety officers, and related positions. Provides leadership and direction in the effective and efficient use of resources by conducting management and policy studies and providing management consulting services to the Office of the Commissioner. Employs a variety of data gathering and quantitative analytical techniques to determine the merit of current and proposed management policies and procedures and to assess the impact of new policies and legislation.

16. Provides management analysis services to the Office of the Commissioner to assess program and management concerns, which may include management studies, option papers, reports, and working group facilitation.

17. Provides organizational expertise and policy advice, consultation, and support to Agency components and monitors the establishment, abolishment, modification, transfer, and/or consolidation of the Agency organizational components and their functional statements; controls the assignment of standard administrative codes for implementation of approved organization proposals in the Agency and serves as the Agency liaison with the Department on SAC activities.

18. Plans, develops, modifies, and coordinates the delegations of authority program for the Agency. Provides advice and consultation on matters related to delegations of authority.

Office of Security Operations:

1. Provides leadership and guidance to FDA for all aspects of physical and personnel security including the suitability and National Security Information program.

2. Develops and implements Agency wide security policy.

3. Manages and administers the Suitability and Security Program as required by the Office of Personnel Management as set forth in "Suitability" (5 CFR part 731), and "National Security Positions" (5 CFR part 732). Monitors the appropriate security clearance levels for Agency positions, employees, and contract employees.

4. Processes clearance requests, reviews investigative reports/findings and makes suitability determinations based on investigative findings.

5. Serves as liaison with the Department's drug testing officials and coordinates the Agency's drug testing program.

6. Carries out duties as outlined in DHHS and the National Security Information Manual. Serves as liaison and coordinates with the Department regarding the classified document program.

7. Coordinates other Agency checks for all non-citizen personnel who work in the Agency's facilities.

8. Develops and directs the Agency wide physical security programs and

provides professional leadership and authoritative guidance.

9. Provides physical, documentary, and preventative security consultation to FDA components.

10. Formulates policy and procedures necessary to maintain the integrity of privileged and trade secret information submitted by industry.

11. Develops and manages the Agency's contractor security program when Automated Data Processing services or non-public information is released under contract agreement.

Office of White Oak Services:

1. Provides program, technical and resources management for the FDA White Oak consolidation, logistics and facilities operations and maintenance services.

2. Provides leadership and guidance to FDA Headquarters' staff offices and Headquarters operating activities for White Oak services.

3. Directs building operations functions for all FDA facilities at the White Oak Campus.

4. Provides direct interface with the General Services Administration (GSA) for White Oak services.

5. Serves as liaison with DHHS and GSA for the efficient management and operation of facilities occupied by FDA programs at White Oak.

6. Directs and manages over a $70 million appropriation for the operation, construction, relocation, and maintenance for the White Oak Campus.

7. Provides leadership and direction to assure the efficient and effective utilization of FDA's resources dedicated to engineering design, facility improvements, and new construction of FDA facilities at White Oak.

8. Furnishes project management services including project planning, cost estimating and design, and oversight of construction until completion.

9. Ensures meaningful and continuous communication with community leaders and associations, other Federal officials, State and local governments, and business leaders and customers at White Oak.

10. Develops multiple strategies for addressing FDA's long and short-range facility plans at White Oak.

11. Develops Agency plans, policy and procedures consistent with new regulatory requirements and Agency needs for White Oak.

Division of Logistics Services and Facilities Operations:

1. Manages shared use conference and training facilities at the White Oak Campus.

2. Oversees transportation management programs and services, serves as the inter-governmental liaison on transportation issues, manages parking, ridesharing program, shuttle services, fleet management and motor pool management.

3. Oversees and directs a variety of commercial contracts to ensure smooth and efficient delivery of services.

4. Participates in the development of Agency policy involving logistics programs and services.

5. Provides guidance and assistance to the Agency operating activities on a variety of logistics management issues.

6. Manages the warehousing program for the White Oak facility to include material receiving and distribution, loading dock management, storage, collection and processing excess personal property, and labor services for movement of personal property.

7. Manages the FDA mail room program for FDA headquarters and field organizations including mail room management, locator services, courier services, off-site mail screening and the nationwide meter contract.

8. Actively participates in and supports the continued development of the White Oak Campus.

Division of White Oak Consolidation:

1. Evaluates and implements strategies that enable the Agency to maximize efficiency through the consolidation of specific and shared functions.

2. Coordinates budget and schedule in order to successfully implement project phases.

3. Establishes management structure and dialog with GSA, architectural and engineering design and construction contractors to ensure the FDA needs and concerns are fully addressed.

4. Monitors construction progress as individual projects proceed and coordinates necessary changes.

5. Provides technical direction interaction with design architects that ensure engineering, architectural and programmatic requirements are met in new facilities.

6. Coordinates the various activities required to successfully relocate the Agency to its new location including the move, Information Technology (IT), security, safety and building operations.

7. Participates in the development of Agency policy involving the consolidation program.

Office of Shared Services:

Provides FDA's administrative services including communications, facilities, library services, FDA historical activities, Freedom of Information (FOI) and Privacy Act programs, and dockets management. Utilizes a call center to address all administrative and information technology management issues, and monitors and analyzes operational and customer satisfaction.

Employee Resource and Information Center:

1. Provides information and services through a call center environment to all FDA employees for administrative and information technology management issues. Maintains and populates key technology tools and monitors and analyzes operational and customer satisfaction.

2. Provides call center support to the general public via the FDA Employee Locator phone line.

3. Provides leadership policy development, and coordination for programs with a financial impact on FDA employees including transit subsidy and childcare subsidy programs, fleet management and motor pool management, Presidential Management Fellows Program, Emerging Leaders Program and new employee orientation.

Office of Public Information and Library Services:

The Office of Public Information and Library Services (OPILS) is responsible for planning and directing Agency information programs to set the direction, coordinate, determine policy, and provide oversight for the provision of information services and information, in a variety of formats and for a variety of purposes, to FDA and the public. OPILS includes the following divisions and teams: Division of Dockets Management (DDM), Division of Freedom of Information (DFOI), FDA Biosciences Library (FBSL), and the FDA History Office. The following are specific functions within the Office:

1. Provides leadership and direction for the operations of all of the Agency information centers, including the FDA Biosciences Library, the Division of Freedom of Information, the Division of Dockets Management, and the Division of Dockets Management and Division of Freedom of Information public reading rooms.

2. Provides executive perspective on current policy objectives and increases public understanding of the Agency's purpose and function.

3. Establishes Agency wide policy and provides overall direction and leadership for the Freedom of information (FOI) and Privacy Act programs.

4. Provides information, information services and research support to FDA through access to information in various formats, via information consulting and advisory services.

5. Provides leadership and direction regarding all aspects of the Agency's regulated dockets program.

6. Increases public understanding of FDA's purpose and history, and collects, preserves and manages exhibits for documents and artifacts reflecting the Agency's history.

Division of Dockets Management:

1. Receives, examines and processes submissions required or permitted in Agency administrative proceedings; establishes and maintains docket files containing Agency official records relating to an administrative proceeding. Disseminates submissions to appropriate offices for action. Routinely coordinates activities of the branch with other appropriate components.

2. Serves as the Agency expert on requirements for submissions required or permitted in Agency administrative proceedings. Participates in the development of regulations and policy impacting on Agency administrative proceedings and the release of information under the Freedom of Information Act (FOIA).

3. Provides staff support for Agency rulemaking activities. Determines compliance of petitions, comments, request for hearings, motions, briefs, and objections with Agency regulations.

4. Maintains and operates a public reading room to make Agency official records available to any interested party, and provides copies upon request, under the provisions of the FOIA. Provides electronic access to these records, via the Internet and other means, as required by the EFOIA.

5. Provides information access via the Intranet and other means to FDA personnel for Dockets Management Branch materials and to copyrighted documents.

6. Plans and conducts Agency wide analytical reviews and studies to assess and management information and address concerns. Makes recommendations and assists in the implementation of the recommendations.

Division of Freedom of Information:

1. Serves as the Agency expert and focal point for headquarters and field personnel in the development and implementation of effective policies and procedures in accordance with the FOIA, the Privacy Act, FDA regulations, and other relevant statutes. Establishes Agency-wide policies and provides guidance and leadership for the FOIA and Privacy Act programs. Serves as the Agency's official Call Center and Public Liaison Office for FOIA matters.

2. Receives, reviews, controls, coordinates and routes all FOI requests to the proper action office; designs and implements control mechanisms to assure FOI and Privacy Act inquiries are processed and responded to within established timeframes.

3. Receives and reviews all recommendations for denials submitted by headquarters and field FOI officers. Analyzes the proposals and evaluates the potential need for supplemental information and/or changes in the recommendations, and coordinates with the submitting office before issuance of a denial for a grant of access, expedited processing, or fee waivers.

4. Analyzes, compiles, and prepares reports on privacy and FOI activities in the Agency for the annual reports to the Department and for other reporting requirements.

5. Maintains copies of Agency manuals, indexes, and other records required to be on public display in the public reading room.

FDA Biosciences Library:

The FDA Biosciences Library is responsible for planning and directing Agency library programs to set the direction, coordinate, determine policy, and provide oversight for the provision of library services and information, in a variety of formats and for a variety of purposes to FDA and the public. The following are specific functions within the Office:

1. Provides research support to FDA through delivery of information consulting and advisory services, literature searches, and document delivery services in order for FDA to carry out its public health mission.

2. Collaborates with FDA researchers on research projects, bibliographies, internal publication databases, copyright issues, digitization and more, so FDA has the information it needs to meet its scientific and regulatory mission.

3. Plans, develops and conducts training sessions to teach customers how to access and best utilize the online resources available to them to enhance their research efforts.

4. Stewards of a unique, valuable, extensive and specialized collection of materials essential to FDA's scientific, legal, administrative and regulatory staff. Collects, organizes, maintains and preserves information resources, in multiple formats, in all areas of FDA's research and products FDA regulates, including: Biologics, blood products, cosmetics, devices, drugs, food processing and safety, nutrition, pharmacy, pharmacology, radiology, tobacco, toxicology, and veterinary medicine.

5. Promotes and markets services and resources to customers. Leverages FDA's resources and increases awareness of the library services, staff expertise, and its valuable research collection. Provides services and resources to Agency customers, other Federal employees and the public on a limited basis.

6. Selects, evaluates, acquires and/or develops, and provides electronic access to scientific and technical databases, publications and other media mechanisms in support of Agency-wide research needs.

7. Partners with libraries and information centers, publishers, consortia across the Federal government, health related associations, and other organizations, to enhance resource sharing opportunities that provide for cost savings, resource sharing, sharing of skills and knowledge, benchmarking best practices, and collaboration on projects that have a beneficial impact on the library and FDA's work.

Public Services Branch:

1. Maintains library operations and staffs the public information desk, responding to requests for information from FDA and members of the public.

2. Provides information, information services and research support to FDA through access to information in various formats.

3. Provides training to FDA on the library's subscribed electronic research resources and tools.

4. Provides consulting and advisory services to FDA staff, through briefings and participation in scientific and regulatory meetings.

5. Provides research support through preparation of extensive literature searches and delivery of customized information packages.

6. Provides articles and documents to researchers via document delivery and inter-library loan services.

7. Monitors and administers the document delivery system, ILLiad, and the customer relationship management system, "Ask a Librarian."

8. Interprets library and information policy and copyright guidance for FDA customers.

9. Manages and coordinates access to bibliographic citation management systems and consults with researchers to assist with preparation of bibliographies and citations.

10. Delivers presentations and briefings at New Employee Orientations, Awareness Days, Open Houses, and FDA center events to promote the library resources and services.

Technical Services Branch:

1. Ensures the library collections, both online and in print formats, are responsive to customer research and information needs.

2. Selects, acquires and manages portfolio of the library's research resources.

3. Develops and implements the library's collection development policy and interprets policy to customers to justify purchase decisions, collection scope and other criteria.

4. Collects usage data, customer recommendations and feedback to determine information resources to maintain and to cancel; administers acquisition of print and online resources.

5. Establishes site licenses beneficial to FDA research for all library subscribed electronic resources.

6. Establishes pilot tests to evaluate new electronic information resources; analyzes feedback and makes determinations for purchase decisions.

7. Administers the integrated library system and its modules, including the online public access catalog, the federated search engine, and the electronic resource management system.

8. Provides news pushes including the **Federal Register**, and manages listservs to provide daily email updates to online newsletters of interest.

FDA History Office:

1. Provides expertise on the history of FDA and its predecessors; is a key resource for historical records and resources used for Agency commemoratives, anniversaries and milestones.

2. Responds to information requests from FDA centers, scholars, the press, consumers, government agencies, industry, trade organizations, health professionals, associations, and foreign sources. Presents information in workshops, briefings, and seminars.

3. Conducts research and produces publications, briefing reports, and presentations interpretive of FDA. Maintains an extensive office research file.

4. Provides expertise and assesses the historical value of Agency resources, i.e., records, photographs, films, audio-visual records, and rare or out-of-print monographs. Leverages FDA resources through consultative partnerships with FDA offices. Collaborates on preservation of historical materials with experts at the National Archives and Records Administration, the National Library of Medicine, the Smithsonian Institution, and other government, academic, and private institutions.

5. Collects, processes, and preserves artifacts that capture the history of FDA's work, represent the commodities it regulates, and document the breadth of its responsibilities. Mounts a variety of exhibits in collaboration with other public and private institutions to educate Agency employees and the public about the history and work of the FDA.

6. Partners with the National Library of Medicine, History of Medicine Division, to create and make available transcripts and recordings of an oral history program that documents FDA's institutional history, through personal interviews with key exiting FDA employees.

Office of Real Property Services:

1. Provides leadership and guidance to Agency components for all aspects of real property management functions.

2. Directs the management of programs and systems leading to the acquisition, alteration, maintenance, and utilization of leased and owned facilities nationwide, except for the acquisition of buildings for the White Oak Headquarters Consolidation.

3. Directs building operations functions for all FDA facilities nationwide.

4. Manages the program and provides direct interface GSA for lease acquisition and lease management for all Agency facilities nationwide.

5. Serves as liaison with DHHS and GSA for general facilities management issues and specifically for the efficient management and operation of facilities occupied by FDA programs nationwide.

6. Directs and manages an excess of $221 million dollar appropriation for the acquisition, operation, construction, maintenance for the Agency's nationwide real property portfolio.

7. Provides leadership and direction to assure the efficient and effective utilization of FDA's resources dedicated to engineering design, facility improvements, and new construction of FDA facilities nationwide.

8. Establishes management structure and dialog with GSA and the architectural engineering design and construction contractors to ensure FDA program needs and concerns are fully addressed.

9. Ensures meaningful and continuous communication with community leaders and associations, State and local governments, and business leaders in areas where FDA proposes new facilities.

10. Develops and implements program plans, policies and procedures designed to create and maintain a safe and healthful environment for FDA employees, visitors, and guest workers, and to protect the environment.

11. Develops Agency plans, policy and procedures consistent with new environmental health and safety regulatory requirements and Agency needs.

12. Provides fire protection, safety engineering, and environmental health consultation to the Agency's program managers and engineering offices.

13. Leads the Agency's decommissioning efforts to close FDA laboratories and offices from an environmental, safety and health perspective.

14. Consults with program officials on safety matters pertaining to changing and emerging research programs.

15. Recommends special technical studies to increase the knowledge of the relationship between occupational safety and environmental health and laboratory programs of FDA.

16. Provides support to the FDA Safety Advisory Board and conducts the FDA Safety and Health Council meetings.

17. Develops and implements a safety management quality assurance program for the Agency's multiple work sites nationwide. Develops and implements a similar headquarters program consistent with the FDA Safety Advisory Board recommendations and approval.

Jefferson Laboratories Complex Staff:

1. Provides leadership and direction regarding all aspects of facilities management.

2. Manages and coordinates all aspects of the Jefferson Laboratories long range facilities planning.

3. Develops renovation and improvement project definitions and priorities for inclusion in the Agency's Annual Facilities Plan and budget.

4. Provides leadership and direction to assure the efficient and effective utilization of Jefferson Laboratories resources dedicated to engineering design, facility improvements, maintenance and new construction projects.

Division of Engineering Services:

1. Manages and directs design and construction requirements for facility acquisitions within the Agency. These requirements may encompass the following activities singularly or in combination; preparation of proposals, preparation of functional requirements, program of requirements and criteria, architect and engineering liaison, space design and planning, functional and technical reviews, preliminary site selections, and project management for facilities construction, renovation and improvement projects.

2. Provides engineering guidance and support for all activities related to maintenance, alterations, and repairs for Agency facilities nationwide.

3. Directs and coordinates all Agency facilities programs concerned with equipment specifications and installation associated with facility acquisitions. Assists the programs' staffs in developing compatible facilities and equipment systems for the Agency.

4. Provides overall engineering services including: Feasibility studies, design criteria, concept, analysis, and estimates. Schedules and tracks building and facilities projects and manages project design.

5. Manages the FDA energy management program; develops Agency policy relating to the program; develops and enforces supporting Agency standards that comply with stated goals of DHHS.

6. Oversight of structural, architectural or mechanical modifications to accommodate specific requirements in the existing FDA portfolio.

7. Prepares computer aided design (CAD) drawings for the Agency and maintains file of master drawings for FDA portfolio. Maintains and updates the electronic space occupancy plans for the Agency as part of the Agency Facilities Management Systems.

8. Administers Agency contract for renovations/alterations of office space.

9. Provides space and alterations project management for existing FDA space to program components.

10. Develops, implements and manages integration of facilities technologies.

11. Coordinates the Agency's compliance with National Environmental Policy Act, Resource Conservation and Recovery Act and related news.

Environment, Safety and Strategic Initiatives Staff:

1. Manages the Agency's Environment, Safety and Health (EH&S) Program.

2. Oversees strategic management initiatives and programs initiated at Government-wide, Departmental, Agency and Office levels.

3. Oversees and directs a variety of commercial contracts or interAgency agreements to ensure smooth and efficient delivery of services.

4. Participates in the development of Agency policy involving EH&S programs and services.

5. Provides guidance and assistance to the Agency operating activities on a variety of EH&S and Strategic management issues.

6. Actively participates in and supports the Agency Facility Management System used to manage FDA's Real Property Asset inventory.

7. Receives and implements new initiatives for Real Property Services (e.g. President Management Agenda initiatives; Office of Management and Budget Scorecards; Department Objectives and Agency initiatives).

Division of Facilities Operations:

1. Coordinates building operations and facilities management functions for all FDA owned facilities within the Washington metropolitan area which includes: Module 1 (MOD 1), and the Beltsville Research Facility (BRF). Through special delegations of authority from GSA, maintains responsibility for the total management, operation, and maintenance of Federal Building 8 (FB–8) and Module 2 (MOD 2).

2. Oversees and directs a variety of commercial contracts to ensure smooth and efficient delivery of services.

3. Participates in the development of Agency policy involving building management and operations.

4. Provides guidance and assistance to the Agency operating activities on a variety of facilities operations issues.

5. Coordinates office and laboratory relocations and provides technical assistance to programs regarding effective space utilization.

6. Provides guidance to program personnel in identifying or developing alternatives or emergency procedures during scheduled and unscheduled maintenance interruptions.

7. Administers Agency contracts for moving services and preventive maintenance for government owned property.

8. Manages and coordinates the GSA Delegations of Authority program for FDA nationwide. Responds, reviews, and analyzes existing and proposed Delegation Agreements, Interagency Agreements, Memorandum of Understandings regarding the Agency's nationwide property holdings for operational planning processes and improvement.

Portfolio Development Staff:

1. Plans and develops the Agency Annual Facilities Plan that includes forecasts for long term, short term and immediate space needs as well as annual facilities budgets for rent, operations and maintenance and building and facilities.

2. Develops multiple strategies for addressing FDA's long and short range facility plans.

3. Develops Agency standards and enforcement of occupied and vacant space utilization. Prepares reports and space management analysis of the Agency's real property holdings. Analyzes Agency housing plans and performs real property occupied and vacant space customer analysis.

4. Provides cost analysis support to Agency components concerned with leasing, construction, and finance costs.

5. Manages the policy, acquisition, management and administration of the Agency's leased real property portfolio.

6. Provides guidance and assistance to the Agency operating activities on a variety of nationwide real estate management issues.

7. Serves as liaison with DHHS and GSA for all lease acquisition and lease management of FDA nationwide facilities.

8. Conducts Agency facility studies and develops specific long-range facility plans for both headquarters and field operations.

9. Directs or participates in, the preparation of the Program of Requirements for new construction projects.

Office of Equal Employment Opportunity and Diversity Management:

1. Advises and assists the Commissioner and other key officials on equal employment opportunity (EEO), diversity, and civil rights activities which impact on policy development and execution of program goals.

2. Serves as the Agency focal point and liaison to the Department, and other Federal agencies, State and local governments, and other organizations regarding EEO, diversity and civil rights matters.

3. Develops and recommends policies and priorities designed to implement the intent of the Office of Personnel Management, Equal Employment Opportunity Commission, and Office of Civil Rights, Department of Health and Human Services requirements under Executive Orders, regulations, EEO and Civil Rights legislation.

4. Provides leadership, direction, and technical guidance to the Agency on EEO, diversity and civil rights matters.

5. Examines the use and impact of administrative mechanisms on work assignments, pay systems, award systems, performance appraisal systems, promotion patterns, reorganization impacts, delegations of authority, management controls, information and documentation systems, and similar functions of management as they impact upon equal employment opportunities for all employees within the Agency.

6. Issues policies, publications and information dissemination services to Agency employees including Commissioner Policy Statements, brochures, the EEO Counselors Manual, etc.

Center for Tobacco Products:

1. The Center for Tobacco Products will be established to address the enactment of the Family Smoking Prevention and Tobacco Control Act. This Office will consist of an Office of Management, an Office of Policy, an Office of Regulations, and an Office of Science.

Office of the Center Director:

1. Provides leadership and direction for all Center activities and coordinates programs within the Agency, Department, and Government agencies.

2. Plans, administers, coordinates, evaluates, and implements overall Center scientific, regulatory, compliance, enforcement and management programs, policies and plans.

3. Provides leadership and direction for Center management, planning, and evaluation systems to ensure optimum utilization of personnel, financial resources, and facilities.

4. Establishes and manages a program to maintain the highest level of quality and integrity for all Center laboratory studies and the processing of regulatory samples, and ensures that all laboratories are in compliance with Good Laboratory Practice Regulations.

5. Coordinates and monitors the Center's overall research portfolio, including all research-related activities and inquiries and the development of strategic research program plans.

6. Serves as the primary representational role for relationships with the department, OMB, the White House, the Congress and the media.

Office of Management:

1. Provides support to the Center Director and Deputy Directors, including the coordination and preparation of briefing materials and background information for meetings, responses to outside inquires, and maintenance and control of the Center Director's working files.

2. Manages the Center's Freedom of Information Act activities, coordinating responses with other Center technical, regulatory, and policy units as well as developing direct responses.

3. Provides correspondence control for the Center and controls and processes all Agency public correspondence directed to the Center Director. Develops and operates tracking systems designed to identify and resolve early warnings and bottleneck problems with executive correspondence.

4. Coordinates the Center's communications with the Agency, Department, and the other Federal Government agencies.

5. Provides authoritative advice and guidance to the Center Director on management policies, guidelines, issues and concerns that directly impact Center programs and initiatives.

6. Provides leadership, guidance and directs the development of long-range strategic and operational plans and systems for Center activities and directs technical support staff in providing essential management services and other critical support functions.

7. Provides leadership and guidance as primary interface working with the FDA Office of Shared Services to ensure provision of a broad range of essential technical support services.

8. Provides leadership and effective coordination as the primary Center liaison and expert with the Office of Information Management for provision and continuous improvement of information and technology services for the Center to include networking, scientific computing software engineering, systems, and telecommunications.

9. Administers and executes Center program planning and performance activities, budget formulation and execution, payroll, accounting, fleet and property management functions.

10. Analyzes, formulates and develops annual budget for the Center in accordance with FDA, DHHS, OMB and Congressional guidelines. Provides oversight and ensures compliance with all regulations governing financial processes as outlined in OMB, GAO, DHHS and FDA policies.

11. Manages and maintains a management system for center wide research and support functions.

12. Develops, maintains, monitors, analyzes, and reports data to Center management and program officials on the Center's budget/planning resource monitoring and evaluations systems.

13. Manages, conducts, and analyzes studies designed to improve Center processes and resource utilization and support requirements.

14. Provides leadership, guidance, technical support and assistance to Center managers, employees and shared services staff on services including timekeeping, payroll, fleet management, personal property management, travel, acquisitions and financial services.

15. Provides leadership within the Center to assure compliance with statutes, executive orders and administrative directives, such as the Chief Financial Officer Act (CFO) and the Federal Financial Manager's Financial Integrity Act (FMFIA).

Office of Policy:

1. Advises the Center Director and other key Agency officials on matters relating to Agency policy, regulations and guidance, legislative issues, and planning and evaluation activities.

2. Participates with the Center Director in the formulation of the basic policies and operational philosophy, which guide the Agency in effectively implementing its responsibilities.

3. Oversees and directs the Centers planning and evaluation activities, including the development of programs and planning strategies through analysis and evaluation of issues affecting policies and program performance.

4. Advises and assists the Center Director and other key Agency officials concerning legislative needs, pending legislation and oversight activities that affect FDA.

5. Serves as the focal point for overall legislative liaison activities within Center, FDA and between FDA, DHHS, PHS, and other agencies related to tobacco; analyzes the legislative needs of the Center and drafts or develops legislative proposals, position papers, and departmental reports on proposed legislation for approval by the Center Director and Commissioner.

6. Advises and assists members of Congress and congressional committees and staffs in consultation with the Office of the Secretary, on Agency actions, policies, and issues related to legislation which may affect the Center.

Office of Regulations:

1. Provides Center oversight and leadership in the development of regulations, policies, procedures and guidance for the review and regulation of tobacco products, their labels, and marketing, and in the development of new legislation.

2. Provides Center oversight and leadership in the administration of the user fee billing and waiver program, and registration and listing.

3. Coordinates, interprets, and evaluates the Center's overall compliance efforts. As necessary, establishes compliance policy or recommends policy to the Center Director.

4. Oversees and directs the Agency's rulemaking activities and regulation and guidance development system.

5. Serves as the Agency focal point for developing and maintaining communications, policies, and programs with regard to regulations development.

6. Stimulates awareness within the Agency of the need for prompt and positive action to assure compliance by regulated industries; works to assure an effective and uniform balance between voluntary and regulatory compliance and Agency responsiveness to consumer needs.

7. Evaluates and coordinates all proposed legal actions to ascertain compliance with regulatory policy and enforcement objectives.

8. Develops and/or recommends to the Center Director policy, programs, and plans for activities between the Agency and State and local agencies; administers the Center's overall Federal-State program and policy; coordinates the program aspects of Agency contracts with State and local counterpart agencies.

Office of Science:

1. Serves as principal authority and provides leadership for the Center's participation in the National Toxicology Program (NTP).
2. Organizes, plans, and directs Center research programs in accordance with Center-wide strategic direction. Implements Center-wide strategies for achieving annual and long-range plans for research.
3. Provides leadership and direction for communications among scientific and administrative staffs.
4. Organizes, plans, and directs Center research related to tobacco products.
5. Directs the development methods used to extrapolate test results from animals to humans.
6. Coordinates research in Center program areas with leading scientists in other segments of FDA and the scientific community at large and promotes and coordinates the Center's technology transfer under the provisions of the Federal Technology Transfer Act.
7. Coordinates with other Center and Agency components and top level officials of other agencies to provide input for long-term research planning in responsible program areas.
8. Ensures that programs implemented are responsive to the Center's portion of the Agency's integrated research plan.
9. Provides scientific oversight of Center research contracts and agreements.
10. Advises and assists the Center Director, Deputy Director, and other key officials on scientific issues that have an impact on policy, direction, and long-range goals.
11. Coordinates and provides guidance on special and overall science policy in program areas that cross major Agency component lines and scientific aspects that are critical or controversial, including Agency risk assessment policies.
12. Represents the Center with other government agencies, state and local governments, industry, academia, consumer organizations, Congress, national and international organizations, and the scientific community on tobacco science policy and tobacco science issues.
13. Serves as the focal point for overall management of Center activities related to science priorities, resources, and leveraging efforts, as well as peer review of scientists and scientific programs.
14. Advises the Commissioner, Deputy Commissioner, and other key officials on scientific facilities and participates with other Agency components in planning such facilities.
15. Administers the Tobacco Advisory Committee that advises the Center Director, Deputy Director, and other key officials regarding the quality and direction of tobacco science and scientific issues.

II. Delegation of Authority. Pending further delegation, directives or orders by the Commissioner of the Food and Drugs, all delegations and redelegations of authority made to officials and employees of affected organizational components will continue in them or their successors pending further redelegations, provided they are consistent with this reorganization.

Dated: January 27, 2010.

Kathleen Sebelius,

Secretary of Health and Human Services.

[FR Doc. 2010–3161 Filed 2–18–10; 8:45 am]

BILLING CODE 4160–01–S

DEPARTMENT OF HOMELAND SECURITY

U.S. Customs and Border Protection

Accreditation and Approval of Inspectorate America Corporation, as a Commercial Gauger and Laboratory

AGENCY: U.S. Customs and Border Protection, Department of Homeland Security.

ACTION: Notice of accreditation and approval of Inspectorate America Corporation, as a commercial gauger and laboratory.

SUMMARY: Notice is hereby given that, pursuant to 19 CFR 151.12 and 19 CFR 151.13, Inspectorate America Corporation, 12211 Port Road, Operations Blvd., Seabrook, TX 77586, has been approved to gauge and accredited to test petroleum and petroleum products for customs purposes, in accordance with the provisions of 19 CFR 151.12 and 19 CFR 151.13. Anyone wishing to employ this entity to conduct laboratory analyses and gauger services should request and receive written assurances from the entity that it is accredited or approved by the U.S. Customs and Border Protection to conduct the specific test or gauger service requested. Alternatively, inquires regarding the specific test or gauger service this entity is accredited or approved to perform may be directed to the U.S. Customs and Border Protection by calling (202) 344–1060. The inquiry may also be sent to *cbp.labhq@dhs.gov.* Please reference the Web site listed below for a complete listing of CBP approved gaugers and accredited laboratories.

http://cbp.gov/xp/cgov/import/operations_support/labs_scientific_svcs/commercial_gaugers/.

DATES: The accreditation and approval of Inspectorate America Corporation, as commercial gauger and laboratory became effective on September 16, 2009. The next triennial inspection date will be scheduled for September 2012.

FOR FURTHER INFORMATION CONTACT: Anthony Malana, Laboratories and Scientific Services, U.S. Customs and Border Protection, 1300 Pennsylvania Avenue, NW., Suite 1500N, Washington, DC 20229, 202–344–1060.

Dated: February 4, 2010.

Ira S. Reese,

Executive Director, Laboratories and Scientific Services.

[FR Doc. 2010–3234 Filed 2–18–10; 8:45 am]

BILLING CODE 9111–14–P

DEPARTMENT OF HOMELAND SECURITY

U.S. Customs and Border Protection

Accreditation and Approval of Inspectorate America Corporation, as a Commercial Gauger and Laboratory

AGENCY: U.S. Customs and Border Protection, Department of Homeland Security.

ACTION: Notice of accreditation and approval of Inspectorate America Corporation, as a commercial gauger and laboratory.

SUMMARY: Notice is hereby given that, pursuant to 19 CFR 151.12 and 19 CFR 151.13, Inspectorate America Corporation, Bo. Encarnacion 127 Km 19.1, Tallaboa-Penuelas, PR 00624, has been approved to gauge and accredited to test petroleum and petroleum products for customs purposes, in accordance with the provisions of 19 CFR 151.12 and 19 CFR 151.13. Anyone wishing to employ this entity to conduct laboratory analyses and gauger services should request and receive written assurances from the entity that it is accredited or approved by the U.S. Customs and Border Protection to conduct the specific test or gauger service requested. Alternatively, inquires regarding the specific test or gauger service this entity is accredited or approved to perform may be directed to the U.S. Customs and Border Protection by calling (202) 344–1060. The inquiry may also be sent to *cbp.labhq@dhs.gov.* Please reference the Web site listed below for a complete listing of CBP approved gaugers and accredited laboratories.

http://cbp.gov/xp/cgov/import/operations_support/labs_scientific_svcs/commercial_gaugers/.

DATES: The accreditation and approval of Inspectorate America Corporation, as commercial gauger and laboratory became effective on September 15, 2009. The next triennial inspection date will be scheduled for September 2012.

FOR FURTHER INFORMATION CONTACT: Anthony Malana, Laboratories and Scientific Services, U.S. Customs and Border Protection, 1300 Pennsylvania Avenue, NW., Suite 1500N, Washington, DC 20229, 202–344–1060.

Dated: February 4, 2010.

Ira S. Reese,

Executive Director, Laboratories and Scientific Services.

[FR Doc. 2010–3236 Filed 2–18–10; 8:45 am]

BILLING CODE 9111–14–P

DEPARTMENT OF HOMELAND SECURITY

U.S. Customs and Border Protection

Accreditation of Dixie Services, Inc., as a Commercial Laboratory

AGENCY: U.S. Customs and Border Protection, Department of Homeland Security.

ACTION: Notice of accreditation of Dixie Services, Inc., as a commercial laboratory.

SUMMARY: Notice is hereby given that, pursuant to 19 CFR 151.12, Dixie Services, Inc., 1706 First Street, Galena Park, TX 77547, has been accredited to test petroleum and petroleum products for customs purposes, in accordance with the provisions of 19 CFR 151.12. Anyone wishing to employ this entity to conduct laboratory analyses should request and receive written assurances from the entity that it is accredited by the U.S. Customs and Border Protection to conduct the specific test requested. Alternatively, inquiries regarding the specific test this entity is accredited to perform may be directed to the U.S. Customs and Border Protection by calling (202) 344–1060. The inquiry may also be sent to *cbp.labhq@dhs.gov.* Please reference the website listed below for a complete listing of CBP approved gaugers and accredited laboratories. *http://cbp.gov/xp/cgov/import/operations_support/labs_scientific_svcs/commercial_gaugers/.*

DATES: The accreditation of Dixie Services, Inc., as commercial laboratory became effective on September 3, 2009. The next triennial inspection date will be scheduled for September 2012.

FOR FURTHER INFORMATION CONTACT: Anthony Malana, Laboratories and Scientific Services, U.S. Customs and Border Protection, 1300 Pennsylvania Avenue, NW., Suite 1500N, Washington, DC 20229, 202–344–1060.

Dated: February 4, 2010.

Ira S. Reese,

Executive Director, Laboratories and Scientific Services.

[FR Doc. 2010–3238 Filed 2–18–10; 8:45 am]

BILLING CODE 9111–14–P

DEPARTMENT OF HOUSING AND URBAN DEVELOPMENT

[Docket No. FR–5380–N–08]

Notice of Proposed Information Collection: Comment Request; FHA TOTAL (Technology Open to Approved Lenders) Mortgage Scorecard

AGENCY: Office of the Assistant Secretary for Housing, HUD.

ACTION: Notice.

SUMMARY: The proposed information collection requirement described below will be submitted to the Office of Management and Budget (OMB) for review, as required by the Paperwork Reduction Act. The Department is soliciting public comments on the subject proposal.

DATES: *Comments Due Date:* April 20, 2010.

ADDRESSES: Interested persons are invited to submit comments regarding this proposal. Comments should refer to the proposal by name and/or OMB Control Number and should be sent to: Leroy McKinney Jr., Departmental Reports Management Officer, QDAM, Department of Housing and Urban Development, 451 7th Street, SW., Washington, DC 20410; e-mail *Leroy.McKinneyJr@HUD.gov* or telephone (202) 402–8048 or the number for the Federal Information Relay Service (1–800–877–8339).

FOR FURTHER INFORMATION CONTACT: Margaret Burns, Director, Office of Single Family Program Development, Department of Housing and Urban Development, 451 7th Street, SW., Washington, DC 20410, telephone (202) 708–2121 (this is not a toll free number) for copies of the proposed forms and other available information.

SUPPLEMENTARY INFORMATION: The Department is submitting the proposed information collection to OMB for review, as required by the Paperwork Reduction Act of 1995 (44 U.S.C. Chapter 35, as amended).

This Notice is soliciting comments from members of the public and affected agencies concerning the proposed collection of information to: (1) Evaluate whether the proposed collection is necessary for the proper performance of the functions of the agency, including whether the information will have practical utility; (2) Evaluate the accuracy of the agency's estimate of the burden of the proposed collection of information; (3) Enhance the quality, utility, and clarity of the information to be collected; and (4) Minimize the burden of the collection of information on those who are to respond; including the use of appropriate automated collection techniques or other forms of information technology, e.g., permitting electronic submission of responses.

This Notice also lists the following information:

Title of Proposal: FHA TOTAL Mortgage Scorecard.

OMB Control Number, if applicable: 2502–0556.

Description of the need for the information and proposed use: The regulation mandating this collection can be found in the Code of Federal Regulations at 24 CFR 203.255(b)(5). This information is necessary to assure that lenders (and automated underwriting system (AUS) vendors) are aware of their obligations regarding use of the TOTAL Mortgage Scorecard and are certifying that they will comply with all pertinent regulations. It also allows FHA to request reports from lenders regarding their use of the scorecard, that they have implemented appropriate quality control procedures for using the scorecard, and provides an appeal mechanism should FHA take an action to terminate a lender's use of the scorecard.

Agency form numbers, if applicable: N/A.

Estimation of the total numbers of hours needed to prepare the information collection including number of respondents, frequency of response, and hours of response: The number of burden hours is 908.0. The number of respondents is 12,000, the number of responses is 452, the frequency of response is on occasion, and the burden hour per response is .464.

Status of the proposed information collection: This is an extension of a currently approved collection.

Authority: The Paperwork Reduction Act of 1995, 44 U.S.C., Chapter 35, as amended.

Dated: February 4, 2010.

Ronald Y. Spraker,

Associate General Deputy Assistant Secretary for Housing.

[FR Doc. 2010–3162 Filed 2–18–10; 8:45 am]

BILLING CODE 4210–67–P

DEPARTMENT OF THE INTERIOR

Bureau of Indian Affairs

Renewal of Agency Information Collection for Appointed Counsel in Involuntary Indian Child Custody Proceedings in State Courts

AGENCY: Bureau of Indian Affairs, Interior.

ACTION: Notice.

SUMMARY: As required by the Paperwork Reduction Act of 1995, this notice announces that the Information Collection Request for the Payment for Appointed Counsel in Involuntary Indian Child Custody Proceedings in State courts has been submitted to OMB for review and renewal. The information collection is currently authorized by OMB Control Number 1076–0111, which expires February 28, 2010.

DATES: Written comments must be submitted on or before March 22, 2010.

ADDRESSES: Comments should be submitted to the Desk Officer for the Department of the Interior, Office of Management and Budget, either by facsimile at (202) 395–5806, or you may send an e-mail to *OIRA_DOCKET@omb.eop.gov.* Please send a copy of your comments to Sue Settles, Chief, Division of Human Services, Office of Indian Services, Bureau of Indian Affairs, Department of the Interior, 1849 C Street, NW., Mail Stop 4513, Washington, DC 20240, *facsimile:* (202) 208–5113, e-mail *Sue.Settles@bia.gov.*

FOR FURTHER INFORMATION CONTACT: You may request further information or obtain copies of the information collection request submission from Sue Settles, *telephone:* (202) 513–7621, *e-mail: Sue.Settles@bia.gov.*

SUPPLEMENTARY INFORMATION:

I. Abstract

The BIA is seeking renewal of the approval for the information collection conducted under 25 CFR 23.13, implementing the Indian Child Welfare Act (25 U.S.C. 1901 *et seq.*). Approval for this collection expires February 28, 2010. The information collection allows BIA to receive written requests by State courts that appoint counsel for an indigent Indian parent or Indian custodian in an involuntary Indian child custody proceeding when appointment of counsel is not authorized by State law. The cognizant BIA Regional Director uses this information to decide whether to certify that the client in the notice is eligible to have his counsel compensated by the Bureau in accordance with the Indian Child Welfare Act. No third party notification or public disclosure burden is associated with this collection. The BIA has adjusted its estimate of burden hours to account for more than one respondent per year and to better define the recordkeeping and reporting burdens associated with this collection. BIA published a notice in the **Federal Register** on October 30, 2009 (74 FR 56208) requesting public comments on the proposed information collection. The comment period ended December 29, 2009. No comments were received.

II. Method of Collection

The following information is collected from State courts in order to allow for payment of appointed counsel in involuntary Indian child custody proceedings. The information collection is submitted to obtain or retain a benefit; i.e., payment for appointed counsel. The information collected is used by the respective Bureau Regional Director to determine:

(a) If an individual Indian involved in an Indian child custody proceeding is eligible for payment of appointed counsel's attorney fees;

(b) If any State statutes provide for coverage of attorney fees under these circumstances;

(c) The State standards for payment of attorney fees in juvenile delinquency proceedings; and,

(d) The name of the attorney, and his actual voucher certified by the court for the work completed on a pre-approved case. This information is required for payment of appointed counsel as authorized by Public Law 95–608.

III. Data

OMB Control Number: 1076–0111.

Title: Payment for Appointed Counsel in Involuntary Indian Child Custody Proceedings in State Courts, 25 CFR 23.13.

Brief Description of Collection: This information is required in order for States to receive payment for counsel appointed to indigent Indian parents or custodians in involuntary child custody proceedings under 25 CFR 23.13. The information is collected to determine applicant eligibility for services.

Type of Review: Extension without change of a currently approved collection.

Respondents: State courts eligible for payment of attorney fees pursuant to 25 CFR 23.13.

Number of Respondents: 4 per year.

Estimated Time per Response: 2 hours for reporting and 1 hour for recordkeeping.

Frequency of Response: Once, on occasion.

Total Annual Burden to Respondents: 12 hours ([2 hours reporting × 4 respondents] + [1 hour recordkeeping + 4 respondents])

Total Annual Cost to Respondents: $0.

IV. Request for Comments

The BIA requests your comments on this collection concerning: (a) The necessity of this information collection for the proper performance of the functions of the agency, including whether the information will have practical utility; (b) the accuracy of the agency's estimate of the burden (hours and cost) of the collection of information, including the validity of the methodology and assumptions used; (c) ways we could enhance the quality, utility and clarity of the information to be collected; and (d) ways we could minimize the burden of the collection of the information on respondents, such as through the use of automated collection techniques or other forms of information technology.

Please note that an agency may not sponsor or conduct, and an individual need not respond to, a collection of information unless it has a valid OMB Control Number.

OMB has up to 60 days to make a decision on the submission for renewal, but may make the decision after 30 days. Therefore, to receive the best consideration of your comments, you should submit them by the due date (*see* **DATES**).

It is our policy to make all comments available to the public for review at the Office of Indian Services, 1849 C Street, NW., Washington, DC during the hours of 9 a.m. to 4 p.m., ET, Monday through Friday except for legal holidays. Before including your address, phone number, e-mail address or other personally identifiable information, be advised that your entire comment—including your personally identifiable information—may be made public at any time. While you may request that we withhold your personally identifiable information, we cannot guarantee that we will be able to do so.

Dated: January 28, 2010.

Alvin Foster,

Chief Information Officer—Indian Affairs.

[FR Doc. 2010–3192 Filed 2–18–10; 8:45 am]

BILLING CODE 4310–4J–P

DEPARTMENT OF THE INTERIOR

Minerals Management Service

Environmental Documents Prepared for Proposed Mineral Exploration on the Alaska Outer Continental Shelf

AGENCY: Minerals Management Service (MMS), Interior.

ACTION: Notice of the availability of Environmental Assessment (EA) and Finding of No Significant Impact (FONSI).

SUMMARY: The Minerals Management Service (MMS), in accordance with Federal regulations that implement the National Environmental Policy Act (NEPA), announces the availability of two Environmental Assessments (EAs) and associated Findings of No Significant Impacts (FONSIs) prepared by MMS for oil and gas exploration activities proposed on the Alaska Outer Continental Shelf (OCS).

FOR FURTHER INFORMATION CONTACT: Minerals Management Service, Alaska OCS Region, 3801 Centerpoint Drive, Suite 500, Anchorage, Alaska 99503–5823; or *AKWebmaster@mms.gov;* or 1–800–764–2627. You may view the EAs on the MMS Web site at *http://www.mms.gov/alaska.*

SUPPLEMENTARY INFORMATION: The MMS prepares EAs for proposals for exploration drilling to evaluate oil and gas resource potential on the Alaska OCS. The EAs examine the potential environmental effects of activities described in the proposals and present MMS conclusions regarding the level and significance of those effects. The EAs are used as the basis for determining whether or not approvals of the proposals would significantly affect the quality of the human environment in the sense of NEPA Section 102(2)(C). A FONSI is prepared in those instances where MMS finds that approval will not result in significant effects on the quality of the human environment.

Document Number: OCS EIS/EA MMS 2009–052. *FONSI Date:* October 15, 2009. The EA evaluates the potential for significant impacts of the specific operations proposed in the Exploration Plan (EP), dated June 2009, submitted to MMS by Shell Offshore Inc. The EP is for exploratory drilling operations that would be conducted in accordance with the OCS Lands Act Amendments and MMS operating regulations (30 CFR 250 and 30 CFR 254). Shell proposes to drill two wells located on the company's leases in the Camden Bay area of the Alaskan Beaufort Sea to evaluate the Sivulliq and Torpedo prospects. The proposed drilling locations are Lease OCS–Y–1805 (Flaxman Island block 6658) and Lease OCS–Y–1941 (Flaxman Island block 6610). Drilling operations would be conducted from the drill ship M/V *Frontier Discoverer* during the July–October 2010 open-water period. Shell's proposal includes suspending all operations and removal of the drill ship and support vessels from the area beginning August 25 until completion of fall subsistence bowhead whaling by the Native Villages of Kaktovik and Nuiqsut, Alaska. Information about the methods by which the exploration activities would be conducted is detailed in the EP and the associated Environmental Impact Analysis and Oil Discharge Prevention and Contingency Plan.

OCS EIS/EA MMS 2009–061. *FONSI Date:* December 7, 2009. The EA evaluates the potential for significant impacts of the specific drilling operations proposed in Shell Gulf of Mexico Inc.'s Exploration Plan (EP), dated July 2009; deemed submitted October 20, 2009. The EP is for exploratory drilling operations that would be conducted in accordance with the OCS Lands Act Amendments and MMS operating regulations (30 CFR 250 and 30 CFR 254). Shell proposes to drill up to three wells at five potential drill sites on the company's leases in the Alaskan Chukchi Sea to evaluate the Burger, Crackerjack, and SW Shoebill prospects. The potential drill sites are on Lease OCS–Y–2280 (Posey block 6764), Lease OCS–Y–2267 (Posey block 6714), Lease OCS–Y–2321 (Posey block 6912), Lease OCS–Y–2111 (Karo block 6864), and Lease OCS–Y–2142 (Karo block 7007). Drilling operations would be conducted from the drill ship M/V *Frontier Discoverer* during the July–October 2010 open-water period. Information about the methods by which the exploration activities would be conducted is detailed in the EP and in the associated Environmental Impact Analysis and Oil Discharge Prevention and Contingency Plan.

Dated: January 26, 2010.

Jeffery Loman,

Acting Regional Director, Alaska OCS Region, Minerals Management Service.

[FR Doc. 2010–3291 Filed 2–18–10; 8:45 am]

BILLING CODE 4310–MR–P

DEPARTMENT OF THE INTERIOR

Bureau of Land Management

[CACA 47740, LLCAD07000, L51030000.FX0000, LVRAB109AA01]

Notice of Availability of the Draft Environmental Impact Statement/Staff Assessment for the Stirling Energy Systems Solar Two Project and Possible California Desert Conservation Area Plan Amendment.

AGENCY: Bureau of Land Management, Interior.

ACTION: Notice of availability.

SUMMARY: In accordance with the National Environmental Policy Act (NEPA) of 1969, as amended, and the Federal Land Policy and Management Act (FLPMA) of 1976, as amended, the Bureau of Land Management (BLM) and the California Energy Commission (CEC) have prepared a Draft Environmental Impact Statement (EIS), Draft California Desert Conservation Area (CDCA) Plan Amendment, and Staff Assessment (SA) as a joint environmental analysis document for the Stirling Energy Systems (SES) Solar Two Project and by this notice are announcing the opening of the comment period.

DATES: To ensure that comments will be considered, the BLM must receive written comments on the Draft EIS/SA within 90 days following the date the Environmental Protection Agency publishes its Notice of Availability in the **Federal Register.** The BLM will announce future meetings or hearings and any other public involvement activities at least 15 days in advance through public notices, media releases, and/or mailings.

ADDRESSES: You may submit comments related to the SES Solar Two Project by any of the following methods:

- *Web site: http://www.energy.ca.gov/sitingcases/solartwo/index.html*
- *E-mail: Cmeyer@energy.state.ca.us*
- *Fax:* (818) 597–8001
- *Mail or other delivery service:* Christopher Meyer, Project Manager, Siting, Transmission and Environmental Protection Division, California Energy Commission, 1516 Ninth Street, MS–15, Sacramento, California, 95814.

Copies of the SES Solar Two Draft EIS/SA are available from the CEC at the above address and in the BLM El Centro Field Office, 1661 S. 4th Street, El Centro, California, 92243.

FOR FURTHER INFORMATION CONTACT: For further information contact Jim Stobaugh, BLM Project Manager, by telephone at (775) 861–6478; through mail at Bureau of Land Management,

P.O. Box 12000, Reno, Nevada 89520; or by e-mail at *Jim_Stobaugh@blm.gov.*

SUPPLEMENTARY INFORMATION: SES has submitted an application to the BLM for development of the proposed SES Solar Two Project, a concentrated solar electrical generating facility capable of generating 750 megawatts of renewable power. The entire project encompasses approximately 6,144 acres of BLM-managed lands. The project site is in Imperial County, California, approximately four miles east of Ocotillo and 14 miles west of El Centro. Generally, the site is bounded on the north by the San Diego Metropolitan Transit System/San Diego & Arizona Eastern Railway and on the south by Interstate 8. The eastern boundary is approximately 1.5 miles west of Dunaway Road and the western boundary is the westerly section line in Section 22 in Township 16 South, Range 12 East. An additional 110-acre construction area is proposed east of Dunaway Road.

SES proposes to use SunCatcher technology on the site. A SunCatcher is a 25-kilowatt solar dish designed to automatically track the sun and collect and focus solar energy onto a power conversion unit (PCU), which generates electricity. The system consists of a 38-foot high by 40-foot wide solar concentrator in a dish structure that supports an array of curved glass mirror facets. These mirrors collect and concentrate solar energy onto the solar receiver of the PCU.

The project also includes an electrical transmission line, water supply pipeline, and an access road. A new 230-kilovolt (kV) substation would be constructed in approximately the center of the project site near a main services complex that is also part of the proposal. The substation would be connected to the existing San Diego Gas and Electric Imperial Valley Substation by about a 10.3-mile long, double-circuit 230 kV transmission line. Approximately 7.6 miles of this new line would be outside the project area but is included in the analysis. The transmission line would require the use of approximately 92 acres.

The BLM's purpose and need for the Solar Two project is to respond to SES' application under Title V of FLPMA (43 U.S.C. 1761) for a right-of-way (ROW) grant to construct, operate, and decommission a solar thermal facility on public lands in compliance with FLPMA, BLM ROW regulations, and other applicable Federal laws. The BLM will decide whether to approve, approve with modification, or deny a ROW grant to SES for the proposed Solar Two project. The BLM will also consider amending the CDCA Plan in this analysis. The CDCA Plan (1980, as amended), while recognizing the potential compatibility of solar generation facilities on public lands, requires that all sites associated with power generation or transmission not identified in that plan be considered through the plan amendment process. If the BLM decides to grant a ROW, the BLM would also amend the CDCA Plan as required.

In the draft EIS analysis, the BLM's proposed action is to authorize the SES Solar Two project and approve a CDCA Plan amendment in response to the application received from SES. In addition to the proposed action, the BLM is analyzing the following action alternatives:

- Authorize the proposed action;
- Authorize a smaller 300 MW alternative and amend the CDCA Plan;
- Authorize the project as described in the Drainage Avoidance #1 alternative that may reduce impacts to primary water drainages of the U.S. and amend the CDCA Plan; and
- Authorize the project as described in the more restrictive Drainage Avoidance #2 alternative that may substantially reduce impacts in eastern and western high flow water drainages of the U.S. and amend the CDCA Plan.

As required under the California Environmental Quality Act (CEQA) and NEPA, the EIS analyzes three no action alternatives:

- Deny the application and not amend the CDCA Plan;
- Deny the project but amend the CDCA Plan to allow other solar energy power generation projects on the project site; and
- Deny the project and amend the CDCA Plan to prohibit solar energy power generation projects on the project site.

The BLM will take into consideration the provisions of the Energy Policy Act of 2005 and Secretarial Orders 3283 *Enhancing Renewable Energy Development on the Public Lands* and 3285 *Renewable Energy Development by the Department of the Interior* in responding to the SES application.

The BLM has entered into a Memorandum of Understanding (MOU) with the CEC to conduct a joint environmental review of solar thermal projects that are proposed on Federal land managed by the BLM with the CEC as the lead agency preparing the environmental documents. The BLM and CEC have agreed through the MOU to conduct joint environmental review of the project in a single combined NEPA/CEQA process and document. In addition, the BLM and the U.S. Army Corps of Engineers (Corps) entered into an MOU to formalize the Corps as a Federal cooperating agency in developing the EIS. The BLM and CEC, in coordination with the Corps, have prepared the Draft EIS/SA evaluating the potential impacts of the proposed Solar Two Project on air quality, biological resources, cultural resources, water resources, geological resources and hazards, land use, noise, paleontological resources, public health, socioeconomics, soils, traffic and transportation, visual resources, and other resources. The Corps requirements under the Clean Water Act (CWA), Section 404(b)(1) Guidelines are to identify and authorize only the Least Environmentally Damaging Practicable Alternative which maximizes avoidance and minimization of impacts to aquatic resources of the U.S. The Corps and the applicant are working with the BLM and CEC to identify the project proposal that would reasonably comply with the Corps' requirements under the CWA and 404(b)(1) Guidelines. The applicant has applied to the Department of Energy (DOE) for a loan guarantee under Title XVII of the Energy Policy Act of 2005, as amended by Section 406 of the American Recovery and Reinvestment Act of 2009, Public Law 111–5. Should the DOE decide to enter into negotiation of a possible loan guarantee with the applicant, the DOE would become a cooperating agency in developing the final EIS. A Notice of Intent to Prepare an EIS/SA and Proposed Land Use Plan Amendment for the Proposed SES Solar Two Project in Imperial County, California was published October 17, 2008 (see 73 FR 61902). The BLM held two public scoping meetings in El Centro, California, on November 24 and December 18, 2008. The formal scoping period ended January 2, 2009.

Please note that public comments will be available for public review and disclosure at the above address during regular business hours (8 a.m. to 4 p.m.), Monday through Friday, except holidays.

Before including your address, phone number, e-mail address, or other personal identifying information in your comment, you should be aware that your entire comment—including your personal identifying information—may be made publicly available at any time. While you can ask us in your comment to withhold your personal identifying information from public review, we cannot guarantee that we will be able to do so.

Authority: 40 CFR 1506.6; 40 CFR 1506.10; and 43 CFR 1610.2.

Vicki L. Wood,

Field Manager, El Centro Field Office .

[FR Doc. 2010–3374 Filed 2–18–10; 8:45 am]

BILLING CODE 4310–40–P

DEPARTMENT OF THE INTERIOR

Bureau of Land Management

[LLAKA01200.L12200000.DP0000]

Notice of Intent To Prepare an Amendment to the Ring of Fire Resource Management Plan for the Campbell Tract Facility, Anchorage, AK

AGENCY: Bureau of Land Management, Interior.

ACTION: Notice of Intent.

SUMMARY: The Bureau of Land Management (BLM) Anchorage Field Office intends to amend the Ring of Fire Resource Management Plan (RMP) to address the 730-acre Campbell Tract Facility administrative site and Special Recreation Management Area in Anchorage, Alaska. The site is currently managed under the 1988 *Management Plan for Public Use and Resource Management on the Bureau of Land Management Campbell Tract Facility.* The amendment will be supported by an Environmental Assessment (EA).

DATES: The BLM will announce the opening of a 30-day public comment period and the scheduling of any public scoping meetings in Anchorage through local news media, newsletters, and the BLM Web site (*http://www.blm.gov/ak*) at least 15 days prior to the meetings. The BLM will provide additional opportunities for public comment after publication of the draft amendment and EA.

ADDRESSES: Submit comments by any of the following methods:

- *Web site: http://www.blm.gov/ak.*
- *E-mail: ak_ctf_amend@blm.gov.*
- *Fax:* (907) 267–1267.
- *Mail:* BLM Anchorage Field Office, Attention—Campbell Tract Facility Amendment, 4700 BLM Road, Anchorage, Alaska 99507.

Documents pertinent to this proposal may be examined at the BLM Anchorage Field Office, 4700 BLM Road, Anchorage, Alaska.

FOR FURTHER INFORMATION CONTACT: For information and/or to have your name added to the mail list, contact Jeff Kowalczyk (*jkowalcz@blm.gov*) at (907) 267–1459.

SUPPLEMENTARY INFORMATION: The BLM-administered Campbell Tract Facility is located in south-central Alaska, within the Municipality of Anchorage. This planning activity encompasses approximately 730 acres of public land in the Ring of Fire planning area. The BLM released the Ring of Fire RMP Record of Decision (ROD) in March 2008. The ROD specified that management of the Campbell Tract Facility administrative site would continue to be guided by the 1988 *Management Plan for Public Use and Resource Management on the Bureau of Land Management Campbell Tract Facility* and any updates to the plan.

The BLM intends to amend the Ring of Fire RMP and revise the 1988 Campbell Tract Facility management plan. A revised Campbell Tract Facility management plan will analyze and provide new management decisions for this site. Management decisions shall be consistent with public land orders for the administrative withdrawal of the area. The plan will fulfill the needs and obligations set forth by the National Environmental Policy Act of 1969 (NEPA), the Federal Land Policy and Management Act of 1976 (FLPMA), and BLM management policies. The BLM will work collaboratively with interested parties to identify the management decisions that are best suited to local, regional, and national needs and concerns.

The preliminary issues and opportunities to be addressed by this planning effort are increased annual visitation, commercial use, on-going trail maintenance, potential for development of administrative facilities, public safety, the expanding role of environmental education, and optimizing outcome-focused management for recreation planning.

The plan amendment and EA will—

- Determine which types of commercial uses, if any, will be authorized within the four management areas on the Campbell Tract Facility: airstrip, science center, administrative buildings, and the Special Recreation Management Area designated by the 1985 Recreation Action Plan;
- Develop a Special Recreation Management Area plan for the Campbell Tract Facility in accordance with Appendix C of the BLM Land Use Planning Handbook (H–1601–01);
- Identify development needs for the existing Campbell Airstrip corridor and for aviation and emergency management;
- Decide whether administrative facilities are sufficient for current and future operations;
- Identify reasonable management actions for addressing trail/user conflicts;
- Decide whether additional special rules are necessary; and
- Determine what ongoing maintenance to facilities and trails is appropriate.

Preliminary planning criteria include the following:

1. The BLM manages public lands under the principles of multiple use/sustained yield as set forth in FLPMA;
2. The plan amendment will address surface acres administered by the BLM at Campbell Tract Facility;
3. Decisions will be limited to those related to the four existing management areas: airstrip, science center, administrative buildings, and the Special Recreation Management Area;
4. Valid existing rights will be protected throughout the planning area;
5. Established and current agreements will remain in effect;
6. Plans and policies of adjacent land owners/managers will be considered;
7. The BLM will encourage and participate in collaborative planning;
8. The BLM will comply with all relevant laws, statues, regulations, manuals, and handbooks;
9. This planning effort will conform to NEPA, FLPMA, the BLM Land Use Planning Handbook (H–1601–1), and other applicable BLM policies;
10. The plan will be consistent with the BLM Alaska Land Health Standards; and
11. The BLM will use an interdisciplinary approach while developing the plan to ensure consideration of the variety of resource issues and concerns identified.

The purpose of the public scoping process is to identify relevant issues and planning criteria that will guide the planning process and influence the EA's scope and alternatives. You may submit comments in writing to the BLM at the public scoping meeting or by the methods listed in the **ADDRESSES** section above. Before including your address, phone number, e-mail address, or other personal identifying information in your comment, you should be aware that your entire comment—including your personal information—may be made publicly available at any time. While you can ask us in your comment to withhold your personal identifying information from public review, we cannot guarantee that we will be able to do so.

Thomas P. Lonnie,

State Director.

[FR Doc. 2010–3169 Filed 2–18–10; 8:45 am]

BILLING CODE 4310–JA–P

DEPARTMENT OF THE INTERIOR

Bureau of Land Management

[LLAZ910000.L12100000.XP0000LXSS150 A00006100.241A]

State of Arizona Resource Advisory Council Meeting

AGENCY: Bureau of Land Management, Interior.

ACTION: Notice of Arizona Resource Advisory Council Meeting.

SUMMARY: In accordance with the Federal Land Policy and Management Act of 1976 and the Federal Advisory Committee Act of 1972, the U.S. Department of the Interior, Bureau of Land Management (BLM), Arizona Resource Advisory Council (RAC), will meet on March 18, 2010, at the BLM National Training Center located at 9828 North 31st Avenue in Phoenix from 8 a.m. until 4:30 p.m. *Agenda items include:* BLM State Director's update on statewide issues; Update on Renewable Energy Development and an in-depth RAC discussion and recommendations on issues to consider for the Renewable Energy footprint on Arizona public lands; Update on the Proposed Mineral Withdrawal Environmental Impact Statement process; Presentation on the California Condor Reintroduction Program; RAC questions on BLM District Managers' Reports; and reports by RAC working groups. A public comment period will be provided at 11:30 a.m. on March 18, 2010, for any interested publics who wish to address the Council on BLM programs and business.

Under the Federal Lands Recreation Enhancement Act, the RAC has been designated as the Recreation Resource Advisory Council (RRAC), and has the authority to review all BLM and Forest Service (FS) recreation fee proposals in Arizona. Part of the afternoon meeting agenda on March 18, will include review and discussion of the Recreation Enhancement Act (REA) Working Group Report and two FS recreation fee proposals in Arizona.

The Coronado National Forest will be completing renovation of the Kent Springs Cabin located in Madera Canyon, 15 miles southeast of Green Valley, Arizona. The FS is proposing to make this property available to the public as an overnight rental for $150 per night. The Kent Springs Cabin with its six rooms can accommodate up to eight people. The house contains two bedrooms, one full bathroom, two living rooms, a fully-equipped kitchen and a large outdoor deck.

The Kaibab National Forest proposes to begin charging a new fee for the daily rental of Hull Cabin, located one mile south of the Grand Canyon on the Tusayan Ranger District. The new fee will consist of a summer rate of $110.00 per day without water/$140.00 per day with water, and a winter rate of $75.00 per day without water. Hull Cabin is listed on the National Register of Historic Places and is the oldest surviving historic cabin near the Grand Canyon's south rim. Initially, the cabin will be available for overnight use with a maximum capacity of six people. Management of the cabin may expand to include use as a group site and/or development of equestrian facilities.

Following the presentations, the RRAC will open the meeting to public comments on the fee proposals. After completing their RRAC business, the BLM RAC will reconvene to provide recommendations to the RAC Designated Federal Official on the fee proposals and discuss future RAC meetings and locations.

DATES: *Effective Date:* March 18, 2010.

FOR FURTHER INFORMATION CONTACT: Deborah Stevens, Bureau of Land Management, Arizona State Office, One North Central Avenue, Suite 800, Phoenix, Arizona 85004–4427, 602–417–9215.

Raymond Suazo,

Acting Arizona State Director.

[FR Doc. 2010–3195 Filed 2–18–10; 8:45 am]

BILLING CODE 4310–32–P

DEPARTMENT OF THE INTERIOR

Bureau of Land Management

[LLNV912000 L16400000.PH0000 LXSS006F0000 261A; 10–08807; MO#4500012081; TAS: 14X1109]

Notice of Public Meeting: Sierra Front Northwestern Basin Resource Advisory Council, Nevada

AGENCY: Bureau of Land Management, Interior.

ACTION: Notice of public meeting.

SUMMARY: In accordance with the Federal Land Policy and Management Act (FLPMA) and the Federal Advisory Committee Act of 1972 (FACA), the U.S. Department of the Interior, Bureau of Land Management (BLM) Sierra Front-Northwestern Great Basin Resource Advisory Council (RAC), will meet in Carson City, Nevada. The meeting is open to the public.

DATES AND TIMES: March 30–31, 2010, at the BLM Carson City District Office, 5665 Morgan Mill Road, Carson City, Nevada. A field trip to locations in Storey and Washoe counties will occur on March 31. Approximate meeting times are 9 a.m. to 5 p.m. and will include a general public comment period, tentatively scheduled for 1 p.m., unless otherwise listed in the final meeting agenda that will be available two weeks prior to the start of the meeting.

FOR FURTHER INFORMATION CONTACT: Mark Struble, (775) 885–6107, E-mail: *mark_struble@nv.blm.gov.*

SUPPLEMENTARY INFORMATION: The 15-member Council advises the Secretary of the Interior, through the BLM, on a variety of planning and management issues associated with public land management in Nevada. Topics for discussion will include, but are not limited to: District Manager's reports on current program of work, Draft Winnemucca RMP/EIS, proposed Ruby Pipeline, possible sage grouse listing, BLM Nevada Wild Horse and Burro Program strategies, American Recovery and Reinvestment Act stimulus projects implementation, Southern Nevada Public Land Management Act Round 11 forum and review of nominations, proposed New Comstock Wind Energy Project/EIS area, Washoe County Illegal Dumping Task Force, and other issues that may arise during the meeting. The final agendas with any additions/corrections to agenda topics, locations, field trips and meeting times, will be posted on the BLM Web site at: *http://www.blm.gov/nv/st/en/fo/carson_city_field.html,* and sent to the media at least 14 days before the meeting. Individuals who need special assistance such as sign language interpretation or other reasonable accommodations, or who wish to receive a copy of each agenda, should contact Mark Struble no later than March 19.

Chris McAlear,

Carson City District Manager.

[FR Doc. 2010–3287 Filed 2–18–10; 8:45 am]

BILLING CODE 4310–HC–P

DEPARTMENT OF THE INTERIOR

National Park Service

National Register of Historic Places; Notification of Pending Nominations and Related Actions

Nominations for the following properties being considered for listing or related actions in the National Register were received by the National Park Service before January 20, 2010. Pursuant to section 60.13 of 36 CFR part

60, written comments concerning the significance of these properties under the National Register criteria for evaluation may be forwarded by United States Postal Service, to the National Register of Historic Places, National Park Service, 1849 C St., NW., 2280, Washington, DC 20240; by all other carriers, National Register of Historic Places, National Park Service, 1201 Eye St., NW., 8th floor, Washington, DC 20005; or by fax, 202–371–6447. Written or faxed comments should be submitted by March 8, 2010.

J. Paul Loether,

Chief, National Register of Historic Places/ National Historic Landmarks Program.

ALABAMA

Tuscaloosa County

Alabama Insane Hospital, 200 University Blvd., Tuscaloosa, 10000060

ARIZONA

Phoenix County

Sacred Heart Home for the Aged, 1110 N. 16th St., Phoenix, 05001548

CONNECTICUT

New Haven County

Chatfield Farmstead, 265 Seymour Rd., Woodbridge, 10000061

LOUISIANA

St. James Parish

Felicite Plantation, (Louisiana's French Creole Architecture MPS) 3351 LA 18, Vacherie, 10000062

MISSISSIPPI

Forrest County

University of Southern Mississippi Historic District, The, 118 College Dr., Hattiesburg, 10000063

Jefferson County

Poplar Hill Grade School, 3080 Poplar Hill Rd., Fayette, 10000064

Kemper County

Sucarnoochee River Fishweir, Address Restricted, Porterville, 10000065

MONTANA

Petroleum County

Lewistown Satellite Airfield Historic District (Boundary Increase III), Welter Divide Road, 12 mi. N. of Winnett, Winnett, 10000066

NEBRASKA

Gage County

North Eleventh Street Historic District, N. 11th St. bounded by Garfield St. on the N. & Lincoln St. on the S., Beatrice, 10000068

North Seventh Street Historic District, N. 7th St. bounded by Garfield St. on the N. & Washington St. on the S., Beatrice, 10000067

OKLAHOMA

Choctaw County

Rose Hill Plantation, Address Restricted, Hugo, 10000069

Pottawatomie County

Old Santa Fe Railroad Bridge, Drummond Rd., Wanette, 10000070

[FR Doc. 2010–3187 Filed 2–18–10; 8:45 am]

BILLING CODE 4310–70–P

DEPARTMENT OF THE INTERIOR

National Park Service

National Register of Historic Places; Weekly Listing of Historic Properties

Pursuant to (36CFR60.13(b,c)) and (36CFR63.5), this notice, through publication of the information included herein, is to apprise the public as well as governmental agencies, associations and all other organizations and individuals interested in historic preservation, of the properties added to, or determined eligible for listing in, the National Register of Historic Places from November 23 to November 27, 2009.

For further information, please contact Edson Beall via: United States Postal Service mail, at the National Register of Historic Places, 2280, National Park Service, 1849 C St. NW., Washington, DC 20240; in person (by appointment), 1201 Eye St. NW., 8th floor, Washington, DC 20005; by fax, 202–371–2229; by phone, 202–354–2255; or by e-mail, *Edson_Beall@nps.gov.*

Dated: February 12, 2010.

J. Paul Loether,

Chief, National Register of Historic Places/ National Historic Landmarks Program.

KEY: State, County, Property Name, Address/ Boundary, City, Vicinity, Reference Number, Action, Date, Multiple Name

ARIZONA

Maricopa County

Hubbard, L. Ron, House, 5501 N. 44th St., Phoenix, 09000953, LISTED, 11/23/09

KENTUCKY

Clark County

Upper Reaches of Boone Creek Rural Historic District, Upper Boone Creek vicinity, Winchester, 09000569, LISTED, 11/27/09 (Clark County MRA)

NEW YORK

Westchester County

Soundview Manor, 283 Soundview Ave., White Plains, 09000957, LISTED, 11/25/09

TENNESSEE

Knox County

Daylight Building, 501–517 Union Ave., Knoxville, 09000956, LISTED, 11/25/09 (Knoxville and Knox County MPS)

[FR Doc. 2010–3188 Filed 2–18–10; 8:45 am]

BILLING CODE 4312–51–P

INTERNATIONAL TRADE COMMISSION

[Investigation No. 337–TA–671]

In the Matter of Certain Digital Cameras; Notice of Commission Determination Not To Review an Initial Determination Terminating the Investigation Based on the Execution of a Settlement Agreement; Termination of the Investigation

AGENCY: U.S. International Trade Commission.

ACTION: Notice.

SUMMARY: Notice is hereby given that the U.S. International Trade Commission has determined not to review an initial determination ("ID") (Order No. 19) of the presiding administrative law judge ("ALJ") terminating the investigation based on the execution of a settlement agreement.

FOR FURTHER INFORMATION CONTACT: Panyin A. Hughes, Esq., Office of the General Counsel, U.S. International Trade Commission, 500 E Street, SW., Washington, DC 20436, telephone (202) 205–3042. Copies of non-confidential documents filed in connection with this investigation are or will be available for inspection during official business hours (8:45 a.m. to 5:15 p.m.) in the Office of the Secretary, U.S. International Trade Commission, 500 E Street, SW., Washington, DC 20436, telephone (202) 205–2000. General information concerning the Commission may also be obtained by accessing its Internet server at *http://www.usitc.gov.* The public record for this investigation may be viewed on the Commission's electronic docket (EDIS) at *http://edis.usitc.gov.* Hearing-impaired persons are advised that information on this matter can be obtained by contacting the Commission's TDD terminal on (202) 205–1810.

SUPPLEMENTARY INFORMATION: On March 24, 2009, the Commission instituted an investigation under section 337 of the Tariff Act of 1930, as amended, 19 U.S.C. § 1337, based on a complaint filed by Samsung Electronics Co., Ltd. of Korea and Samsung Electronics America, Inc. of Ridgefield Park, New Jersey (collectively, "Samsung") on February 17, 2009, and supplemented

on February 27, 2009 and March 11, 2009. 74 FR 12377–78 (Mar. 24, 2009). The complaint, as supplemented, alleged violations of section 337 in the importation into the United States, the sale for importation, or the sale within the United States after importation of certain digital cameras by reason of infringement of several claims of United States Patent Nos. 5,731,852 and 6,229,695. The complaint named Eastman Kodak Company of Rochester, New York ("Kodak") as respondent.

On January 8, 2010, Samsung and Kodak filed a joint motion to terminate the investigation in its entirety based on the execution of a settlement agreement. On January 20, 2010, the Commission investigative attorney filed a response in support of the motion to terminate the investigation.

On January 21, 2010, the ALJ issued the subject ID (Order No. 19) terminating the investigation. None of the parties petitioned for review of the ID. The Commission has determined not to review the ID. Accordingly, this investigation is terminated.

The authority for the Commission's determination is contained in section 337 of the Tariff Act of 1930, as amended (19 U.S.C. 1337), and in section 210.42(h) of the Commission's Rules of Practice and Procedure (19 CFR 210.42(h)).

By order of the Commission.

Issued: February 12, 2010.

Marilyn R. Abbott,

Secretary to the Commission.

[FR Doc. 2010–3248 Filed 2–18–10; 8:45 am]

BILLING CODE 7020–02–P

INTERNATIONAL TRADE COMMISSION

[Investigation No. 337–TA–687]

In the Matter of Certain Video Displays, Components Thereof, and Products Containing Same; Notice of Commission Decision Not To Review an Initial Determination Granting Complainant's Motion To File a Second Amended Complaint and To Amend the Notice of Investigation

AGENCY: U.S. International Trade Commission.

ACTION: Notice.

SUMMARY: Notice is hereby given that the U.S. International Trade Commission has determined not to review an initial determination ("ID") (Order No. 12) of the presiding administrative law judge ("ALJ") granting complainant's motion to file a second amended complaint and to amend the notice of investigation in the above-captioned investigation.

FOR FURTHER INFORMATION CONTACT: Clint Gerdine, Esq., Office of the General Counsel, U.S. International Trade Commission, 500 E Street, SW., Washington, DC 20436, telephone (202) 708–2310. Copies of non-confidential documents filed in connection with this investigation are or will be available for inspection during official business hours (8:45 a.m. to 5:15 p.m.) in the Office of the Secretary, U.S. International Trade Commission, 500 E Street, SW., Washington, DC 20436, telephone (202) 205–2000. General information concerning the Commission may also be obtained by accessing its Internet server at *http://www.usitc.gov.* The public record for this investigation may be viewed on the Commission's electronic docket (EDIS) at *http://edis.usitc.gov.* Hearing-impaired persons are advised that information on this matter can be obtained by contacting the Commission's TDD terminal on (202) 205–1810.

SUPPLEMENTARY INFORMATION: The Commission instituted this investigation on September 16, 2009, based on a complaint filed by LG Electronics, Inc. ("LGE") of Korea. 74 FR 47616. The complaint, as amended, alleges violations of section 337 of the Tariff Act of 1930, as amended, 19 U.S.C. 1337, in the importation into the United States, the sale for importation, and the sale within the United States after importation of certain video displays, components thereof, and products containing same by reason of infringement of certain claims of U.S. Patent Nos. 5,790,096; 5,537,612; 5,459,522; and 7,154,564. The complaint further alleges the existence of a domestic industry. The Commission's notice of investigation named the following respondents: Funai Electric Company, Ltd. of Japan; Funai Corporation, Inc. of Rutherford, New Jersey; P&F USA, Inc. of Alpharetta, Georgia; and Vizio, Inc. of Irvine, California.

On November 25, 2009, complainant filed a motion for leave to file a second amended complaint and to amend the notice of investigation to add the following respondents to the investigation: AmTran Technology Co., Ltd. of Taiwan; and AmTran Logistics, Inc. of Irvine, California (collectively "AmTran").

On January 8, 2010, the ALJ issued the subject ID granting complainant's motion for leave to file a second amended complaint and to amend the notice of investigation. On January 20, 2010, the ALJ issued an order (Order No. 13) suspending the current procedural schedule of the investigation until a new one can be set in the second half of February 2010. On January 21, 2010, Amtran petitioned for review of the ID. On January 26, 2010, the Commission investigative attorney and LGE each filed a response in opposition to Amtran's petition for review. The Commission has determined not to review this ID. The Commission notes that the ALJ has the authority to move the hearing dates and target date to avoid any resulting prejudice to AmTran being added as a respondent over four months after institution of the investigation.

The authority for the Commission's determination is contained in section 337 of the Tariff Act of 1930, as amended, 19 U.S.C. 1337, and in sections 210.14, 210.42(c), and 210.43(d) of the Commission's Rules of Practice and Procedure, 19 CFR 210.14, 210.42(c), 210.43(d).

By order of the Commission.

Issued: February 12, 2010.

Marilyn R. Abbott,

Secretary to the Commission.

[FR Doc. 2010–3250 Filed 2–18–10; 8:45 am]

BILLING CODE 7020–02–P

INTERNATIONAL TRADE COMMISSION

[Investigation No. 337–TA–632]

Certain Refrigerators and Components Thereof; Notice of the Commission's Final Determination of No Violation of Section 337, Extension of Target Date, Termination of the Investigation

AGENCY: U.S. International Trade Commission.

ACTION: Notice.

SUMMARY: Notice is hereby given that the U.S. International Trade Commission has determined that there is no violation of Section 337 of the Tariff Act of 1930 (19 U.S.C. * 1337) by LG Electronics, Inc.; LG Electronics, USA, Inc.; and LG Electronics Monterrey Mexico, S.A., De, CV. The target date of the investigation is extended to February 12, 2010. The investigation is terminated.

FOR FURTHER INFORMATION CONTACT: Megan M. Valentine, Esq., Office of the General Counsel, U.S. International Trade Commission, 500 E Street, SW., Washington, DC 20436, telephone (202) 708–2301. Copies of the presiding Administrative Law Judge's ("ALJ") Initial Determinations ("ID") and all other non-confidential documents filed in connection with this investigation are

or will be available for inspection during official business hours (8:45 a.m. to 5:15 p.m.) in the Office of the Secretary, U.S. International Trade Commission, 500 E Street, SW., Washington, DC 20436, telephone (202) 205–2000. General information concerning the Commission may also be obtained by accessing its Internet server at *http://www.usitc.gov.* The public record for this investigation may be viewed on the Commission's electronic docket (EDIS) at *http://edis.usitc.gov.* Hearing-impaired persons are advised that information on this matter can be obtained by contacting the Commission's TDD terminal on (202) 205–1810.

SUPPLEMENTARY INFORMATION: On February 26, 2008, the Commission instituted this investigation, based on a complaint filed by Whirlpool Patents Company of St. Joseph, Michigan; Whirlpool Manufacturing Corporation of St. Joseph, Michigan; Whirlpool Corporation of Benton Harbor, Michigan; and Maytag Corporation of Benton Harbor, Michigan (collectively, "Whirlpool"). The complaint, as supplemented, alleged violations of Section 337 based upon the importation into the United States, the sale for importation, and the sale within the United States after importation of certain refrigerators and components thereof that infringe certain claims of U.S. Patent Nos. 6,082,130 ("the '130 patent"); 6,810,680 ("the '680 patent"); 6,915,644 ("the '644 patent"); 6,971,730 ("the '730 patent"); and 7,240,980 ("the '980 patent"). Whirlpool named LG Electronics, Inc.; LG Electronics, USA, Inc.; and LG Electronics Monterrey Mexico, S.A., De, CV (collectively, "LG") as respondents. The complaint, as supplemented, further alleged that an industry in the United States exists as required by subsection (a)(2) of Section 337 and requested that the Commission issue an exclusion order and cease and desist orders.

On May 1, 2008, Whirlpool filed a motion to partially terminate the investigation based on their withdrawal of the '730 patent and the '980 patent. LG supported the motion. On June 9, 2009, the ALJ issued an ID, Order No. 8, terminating the investigation, in part, as to the '730 and '980 patents. On June 24, 2008, the Commission determined not to review Order No. 8. On September 11, 2008, Whirlpool and LG filed a joint motion seeking termination of this investigation with respect to the '680 patent and the '644 patent on the basis of a settlement agreement. On September 25, 2008, the ALJ issued an ID, Order No. 10, terminating the investigation, in part, as to the '680 and '644 patents. No petitions for review were filed. On October 27, 2008, the Commission determined not to review Order No. 10. The '130 patent is the sole patent remaining in this investigation.

On October 17, 2008, Whirlpool filed a motion for summary determination that it had satisfied the importation requirement. On November 20, 2008, the ALJ issued an ID, Order No. 14, granting complainant's motion for summary determination of importation. No petitions for review were filed. On December 15, 2008, the Commission issued notice that it had determined not to review Order No. 14.

On July 24, 2008, Whirlpool filed a motion seeking leave to amend the complaint and notice of investigation to (1) remove references to patents that had been withdrawn from this investigation; (2) add a reference to a non-exclusive license that relates to two patents at issue; and (3) update the current state of the domestic industry. On November 25, 2008, the ALJ issued Order No. 15, in which he granted Whirlpool's motion as to (1) and (3) above and denied it with respect to (2). No petitions for review were filed. The Commission determined not to review the subject ID on December 15, 2008.

On February 26, 2009, the ALJ issued a final ID, in which he found no violation of Section 337. On March 11, 2009, Whirlpool filed a petition for review, and LG filed a contingent petition for review. Whirlpool, LG and the Commission investigative attorney ("IA") filed responses. On April 27, 2009, the Commission determined to review the final ID in its entirety. 74 FR 20345–6 (May 1, 2009). In particular, the Commission was concerned with the ALJ's claim construction of the terms "freezer compartment," "disposed within the freezer compartment," and "ice storage bin having a bottom opening." The Commission asked the parties to address several questions concerning claim construction.

After receiving briefing from the parties, the Commission determined to modify the ALJ's claim constructions of the terms "freezer compartment," "disposed within the freezer compartment," and "ice storage bin having a bottom opening," determined to affirm the ALJ's construction of the term "ice maker," and determined to remand the investigation to the ALJ to make findings regarding infringement, validity, and domestic industry consistent with the Commission's claim constructions. The Commission further ordered the ALJ to issue a remand ID ("RID") on violation and a recommended determination on remedy and bonding. The Commission also issued an Opinion detailing its reasons for modifying the claim constructions.

On July 22, LG filed a petition for reconsideration of the Commission's decision to modify the ALJ's claim constructions of the phrases "freezer compartment" and "disposed within the freezer compartment." On August 28, 2009, the Commission denied LG's petition.

On October 9, 2009, the ALJ issued his RID, in which he found no violation of Section 337. Specifically, the ALJ found that the accused refrigerators and components thereof do not infringe claims 1, 2, 4, 6, 8, and 9 of the '130 patent literally or under the doctrine of equivalents. The ALJ also found that claims 1, 2, 4, 6, and 9 of the '130 patent are invalid under 35 U.S.C. 103 for obviousness, but that claim 8 of the '130 patent is not invalid under 35 U.S.C. 103. The ALJ further found that a domestic industry exists.

On October 26, 2009, Whirlpool filed a petition for review challenging the RID's conclusion of non-infringement and obviousness. LG also filed a contingent petition for review challenging the ALJ's findings concerning non-obviousness and his conclusion that a domestic industry exists. On November 3, 2009, LG filed a response to Whirlpool's petition. On November 4, 2009, Whirlpool filed a response to LG's petition. On November 6, 2009, the IA filed a combined response to both petitions.

On December 14, 2009, the Commission issued a Notice determining to review the RID in its entirety and requesting written submissions from the parties regarding the issues under review, particularly concerning the validity of claim 2 of the '130 patent, as well regarding issues of remedy, the public interest, bonding. 74 FR 67250–1 (Dec. 18, 2009). The parties filed initial submissions in response to the Commission's Notice on December 30, 2009, and reply submissions on January 7, 2010.

Having examined the record of this investigation, including the ALJ's final RID, the Commission has determined to affirm the RID's determination of no violation of the '130 patent.

Specifically, the Commission has determined to modify the ALJ's implied construction of the claim limitations "the auger moves ice pieces from the ice storage bin through the bottom opening for dispensing from the ice storage bin" and "ice crushing region." The Commission has also determined to reverse a portion of the ALJ's determination of non-infringement and find that the accused side-by-side

models infringe claims 1, 2, 4, 6, and 9 of the '130 patent.

The Commission has determined to affirm the remainder of the ALJ's findings. Specifically, the Commission affirms the ALJ's finding that the accused side-by-side model refrigerators do not infringe claim 8 of the '130 patent. The Commission also affirms the ALJ's finding that the accused French Door model refrigerators do not infringe any of the asserted claims of the '130 patent. The Commission further affirms the ALJ's finding that claims 1, 2 4, 6, and 9 of the '130 patent are invalid for obviousness with several modifications to the analysis concerning claims 1 and 2. The Commission also affirms the ALJ's finding that claim 8 is not invalid for obviousness. Finally, the Commission affirms the ALJ's finding that there is a domestic industry.

The target date of the investigation was February 9, 2010. Due to inclement weather, the Federal government was closed from Monday, February 8 through Thursday, February 11, 2010. The target date is, therefore, extended to Friday, February 12, 2010, pursuant to Commission Rule 210.51(a) (19 CFR 210.51(a)).

The authority for the Commission's determination is contained in Section 337 of the Tariff Act of 1930, as amended (19 U.S.C. 1337), and in sections 210.42–46 of the Commission's Rules of Practice and Procedure (19 CFR 210.42–46).

Issued: February 12, 2010.

By order of the Commission.

Marilyn R. Abbott,

Secretary to the Commission.

[FR Doc. 2010–3252 Filed 2–18–10; 8:45 am]

BILLING CODE 7020–02–P

INTERNATIONAL BOUNDARY AND WATER COMMISSION, UNITED STATES AND MEXICO

United States Section; Notice of Availability of the Final Environmental Impact Statement, Flood Control Improvements and Partial Levee Relocation, Presidio Flood Control Project, Presidio, TX

AGENCY: United States Section, International Boundary and Water Commission (USIBWC).

ACTION: Notice of Availability of Final Environmental Impact Statement.

SUMMARY: Pursuant to section 102(2)(c) of the National Environmental Policy Act (NEPA) of 1969, as amended, the United States Section, International Boundary and Water Commission (USIBWC) has prepared a Final Environmental Impact Statement (Final EIS) for flood control improvements to the Presidio Flood Control Project, Presidio, Texas (Presidio FCP). The EIS analyzed potential impacts of the No Action Alternative and six action alternatives under consideration. Site-specific information was used to evaluate environmental consequences that may result from implementing improvements in the upper, middle and lower reaches of the Presidio FCP. The following environmental resources were assessed in the Final EIS: Biological resources, cultural resources, water resources, land use, socioeconomic resources and transportation, environmental health issues (air quality, noise, public health, and environmental hazards), and cumulative impacts.

DATES: The Draft EIS was available for a 45-day review period, November 20, 2009 to January 12, 2010. Written comments were incorporated into the Final EIS. The USIBWC will announce its decision regarding future actions within the Presidio FCP in a Record of Decision to be published in the **Federal Register** no sooner than 30 days after the Environmental Protection Agency publishes a Notice of Availability for the *Final Environmental Impact Statement, Flood Control Improvements and Partial Levee Relocation, USIBWC Presidio Flood Control Project, Presidio, Texas.* A copy of the Final EIS will be available for review at the City of Presidio Library, 2440 O'Reilly Street, Presidio, Texas 79845, and will also be posted at the USIBWC Web site at *http://www.ibwc.gov*.

FOR FURTHER INFORMATION CONTACT: Mr. Daniel Borunda, Acting Division Chief, Environmental Management Division, USIBWC, 4171 North Mesa Street, C–100, El Paso, Texas 79902 or e-mail: *danielborunda@ibwc.gov*.

SUPPLEMENTARY INFORMATION: The Final EIS analyzed potential effects of the No Action Alternative and six action alternatives for flood control improvement alternatives for the Presidio FCP. The following six action alternatives were taken into consideration: (1) Retaining the current levee alignment, repairing structural levee damages and raising some levee segments as required to ensure full protection from a 25-year flood event; (2) 100-year flood protection of the City of Presidio and agricultural lands along the Presidio FCP by raising the levee system along its entire length and current alignment; (3) raising the entire levee system for 100-year flood protection, retaining current levee alignment in the upper and middle reaches of the Presidio FCP but partially relocating approximately 3.4 miles of the levee in the lower reach; (4) 100-year flood protection of the City of Presidio by raising the levee system in the upper and middle reaches of the Presidio FCP, in conjunction with a new 1.3-mile spur levee starting at mile 9.2 to connect the raised levee section to elevated terrain south of the City of Presidio; a 25-year flood protection would be retained in the lower reach along agricultural lands; (5) 100-year flood protection of the City of Presidio by raising in place the levee system along the upper and middle reaches of the Presidio FCP, constructing a new 1.4-mile spur levee at mile 8.5, and retaining the 25-year flood protection in the lower reach; and (6) raising the levee along the upstream sections of the levee system to provide 100-year flood protection to the City of Presidio and retaining the 25-year flood protection of agricultural lands in the lower reach, as in the two previous alternatives, and constructing a new 2.9-mile long spur levee in the middle reach, starting at levee mile 7.3, along a railroad track.

Preferred Alternative: The USIBWC has identified Alternative 2, raise the levee in-place to provide 25-year flood protection to the City of Presidio and the adjacent agricultural areas as the preferred alternative for implementation. This has also been identified as the environmentally preferred alternative.

Dated: February 11, 2010.

Eric Meza,

Legal Adviser.

[FR Doc. 2010–3127 Filed 2–18–10; 8:45 am]

BILLING CODE 7010–01–P

DEPARTMENT OF LABOR

Occupational Safety and Health Administration

[Docket No. OSHA–2009–0042]

Peer Review, Conflict of Interest and Disclosure Form; Request for the Office of Management and Budget's (OMB) Approval of Information Collection (Paperwork) Requirements

AGENCY: Occupational Safety and Health Administration (OSHA), Labor.

ACTION: Request for public comment.

SUMMARY: OSHA solicits comments concerning its proposal to extend the Office of Management and Budget's (OMB) approval of the Conflict of Interest (COI) and Disclosure Form which is used to determine whether or not a conflict of interest exists for a potential peer review panel member.

DATES: Comments must be submitted (postmarked, sent, or received) by April 20, 2010.

ADDRESSES:

Electronically: You may submit comments and attachments electronically at *http://www.regulations.gov,* which is the Federal eRulemaking Portal. Follow the instructions online for submitting comments.

Facsimile: If your comments, including attachments, are not longer than 10 pages, you may fax them to the OSHA Docket Office at (202) 693–1648.

Mail, hand delivery, express mail, messenger, or courier service: When using this method, you must submit three copies of your comments and attachments to the OSHA Docket Office, Docket No. OSHA–2009–0042, U.S. Department of Labor, Occupational Safety and Health Administration, Room N–2625, 200 Constitution Ave., NW., Washington, DC 20210. Deliveries (hand, express mail, messenger, and courier service) are accepted during the Department of Labor's and Docket office's normal business hours, 8:15 a.m. to 4:45 p.m., e.t.

Instructions: All submissions must include the Agency name and OSHA docket number (OSHA–2009–0042). All comments, including any personal information you provide, are placed in the public docket without change, and may be made available online at *http://www/regulations.gov.* For further information on submitting comments *see* the "Public Participation" heading in the section of this notice titled "**SUPPLEMENTARY INFORMATION.**"

Docket: To read or download comments or other material in the docket, go to *http://www.regulations.gov* or to the OSHA Docket Office at the address above. All documents in the docket (including this **Federal Register** notice) are listed in the *http://www.regulations.gov* index; however, some information (*e.g.,* copyrighted material) is not publicly available to read or download through the Web site. All submissions, including copyrighted material, are available for inspection and copying at the OSHA Docket Office. You may contact Jamaa Hill at the address below to obtain a copy of the Information Collection Request (ICR).

FOR FURTHER INFORMATION CONTACT: Jamaa Hill or Todd Owen, Directorate of Standards and Guidance, OSHA, U.S. Department of Labor, Room N–3609, 200 Constitution Avenue, NW., Washington, DC 20210; telephone (202) 693–2222.

SUPPLEMENTARY INFORMATION:

I. Background

The Department of Labor, as part of its continuing effort to reduce paperwork and respondent (*i.e.,* employer) burden, conducts a preclearance consultation program to provide the public with an opportunity to comment on proposed and continuing information collection requirements in accordance with the Paperwork Reduction Act of 1995 (44 U.S.C. 3506(c)(2)(A)). This program ensures that information is in the desired format, reporting burden (time and cost) is minimal, collection instruments are clearly understood, and OSHA's estimate of the information collection burden is accurate. The Occupational Safety and Health Act of the 1970 (the Act) (29 U.S.C. 651 *et seq.*) authorizes information collection by employers as necessary or appropriate for enforcement of the Act or for developing information regarding the causes and prevention of occupational injuries, illnesses, and accidents (29 U.S.C. 657).

OSHA conducts peer reviews to review a draft product for quality by specialists in the field who were not involved in producing the draft. The selection of participants in a peer review is based on expertise, with due consideration of independence. The Office of Management and Budget published the Final Information Quality Bulletin for Peer Review on December 15, 2004. The Bulletin states "* * * the agency must address reviewers' potential conflicts of interest (including those stemming from ties to regulated businesses and other stakeholders) and independence from the agency." The Bulletin requires agencies to adopt or adapt the committee selection policies employed by the National Academy of Sciences (NAS) when selecting peer reviewers who are not Government employees. To fulfill this requirement, OSHA has developed a Conflict of Interest (COI) and Disclosure Form, based on NAS' Conflict of Interest Disclosure form. This form will be used to determine whether or not a conflict exists for a potential peer review panel member.

II. Special Issues for Comment

OSHA has a particular interest in comments on the following issues:

- Whether the proposed information collection requirements are necessary for the proper performance of the Agency's functions, including whether the information is useful;
- The accuracy of OSHA's estimate of the burden (time and costs) of the information collection requirement, including the validity of the methodology and assumptions used;
- The quality, utility, and clarity of the information collected; and
- Ways to minimize the burden on employers who must comply; for example, by using automated or other technological information collection and transmission techniques.

III. Proposed Actions

OSHA proposes to extend OMB's approval of the COI form; thus, retaining OSHA's current burden hour estimate of 27 hours. The Agency will summarize the comments submitted in response to this notice, and will include this summary in its request to OMB.

Type of Review: Extension of a currently approved collection.

Title: OSHA's Conflict of Interest (COI) and Disclosure Form.

OMB Number: 1218–0255.

Affected Public: Individuals or households.

Number of Respondents: 36.

Frequency of Responses: On occasion.

Average Time per Response: One half hour (.5 hour) for respondents to complete Tier 1 for "influential scientific assessments;" and 1 hour for respondents to complete both Tier 1 and Tier 2 for "highly influential scientific assessments."

Estimated Total Burden Hours: 27.

Estimated Cost (Operation and Maintenance): $0.

IV. Public Participation—Submission of Comments on This Notice and Internet Access to Comments and Submissions

You may submit comments in response to this document as follows: (1) Electronically at *http://www.regulations.gov,* which is the Federal eRulemaking Portal; (2) by facsimile (FAX); or (3) by hard copy. All comments, attachments, and other material must identify the Agency name and the OSHA docket number for the ICR (Docket No. OSHA–2009–0042). You may supplement electronic submissions by uploading document files electronically. If you wish to mail additional materials in reference to an electronic or facsimile submission, you must submit them to the OSHA Docket Office (*see* the section of this notice titled **ADDRESSES**). The additional materials must clearly identify your electronic comments by your name, date, and the docket number so the Agency can attach them to your comments.

Because of security procedures, the use of regular mail may cause a significant delay in the receipt of comments. For information about security procedures concerning the

delivery of materials by hand, express delivery, messenger, or courier service, please contact the OSHA Docket Office at (202) 693–2350 (TTY (877) 889–5627). Comments and submissions are posted without change at *http://www.regulations.gov.* Therefore, OSHA cautions commenters about submitting personal information such as social security numbers and date of birth. Although all submissions are listed in the *http://www.regulations.gov* index, some information (e.g., copyrighted material) is not publicly available to read or download through this Web site. All submissions, including copyrighted material, are available for inspection and copying at the OSHA Docket Office. Information on using the *http://www.regulations.gov* Web site to submit comments and access the docket is available at the Web site's "User Tips" link. Contact the OSHA Docket Office for information about materials not available through the Web site, and for assistance in using the Internet to locate docket submissions.

V. Authority and Signature

David Michaels, PhD, MPH, Assistant Secretary of Labor for Occupational Safety and Health, directed the preparation of this notice. The authority for this notice is the Paperwork Reduction Act of 1995 (44 U.S.C. 3506 *et seq.*) and Secretary of Labor's Order No. 5–2007 (72 FR 31159).

Signed at Washington, DC, this February 4, 2010.

David Michaels,

Assistant Secretary of Labor for Occupational Safety and Health.

[FR Doc. 2010–3253 Filed 2–18–10; 8:45 am]

BILLING CODE 4510–26–P

DEPARTMENT OF LABOR

Employment and Training Administration

Workforce Investment Act; Native American Employment and Training Council

AGENCY: Employment and Training Administration, U.S. Department of Labor.

ACTION: Notice of meeting.

SUMMARY: Pursuant to Section 10(a)(2) of the Federal Advisory Committee Act (FACA) (Pub. L. 92–463), as amended, and Section 166(h)(4) of the Workforce Investment Act (WIA) [29 U.S.C. 2911(h)(4)], notice is hereby given of the next meeting of the Native American Employment and Training Council (Council), as constituted under WIA.

DATES: The meeting will begin at 9 a.m. (Eastern Time) on Wednesday, March 3, 2010, and continue until 5 p.m. that day. The meeting will reconvene at 9 a.m. on Thursday, March 4, 2010, and adjourn at 5 p.m. that day. The period from 3 p.m. to 5 p.m. on March 4, 2010, will be reserved for participation and presentations by members of the public.

ADDRESSES: The meetings will be held at the U.S. Department of Labor (DOL), Frances Perkins Building, 200 Constitution Avenue, NW., Room S–2322, Washington, DC 20210.

SUPPLEMENTARY INFORMATION: The meeting will be open to the public. Members of the public not present may submit a written statement on or before February 23, 2010, to be included in the record of the meeting. Statements are to be submitted to Mrs. Evangeline M. Campbell, Designated Federal Official (DFO), U.S. Department of Labor, 200 Constitution Avenue, NW., Room S–4209, Washington, DC 20210. Persons who need special accommodations should contact Mr. Craig Lewis at (202) 693–3384, at least two business days before the meeting. The formal agenda will focus on the following topics: (1) DOL, Employment and Training Administration Assistant Secretary's Update; (2) DOL, Office of Workforce Investment Administrator's Update; (3) DOL PY 2010–PY 2011 Strategic Planning; (4) Reauthorization of WIA; (5) DOL, Indian and Native American Program Update; (6) Training and Technical Assistance; (7) 2010 Census; (8) Council Update; (9) Council Workgroup Reports; and (10) Council Recommendations.

FOR FURTHER INFORMATION CONTACT: Mrs. Evangeline M. Campbell, DFO, Indian and Native American Program, Employment and Training Administration, U.S. Department of Labor, Room S–4209, 200 Constitution Avenue, NW., Washington, DC 20210. Telephone number (202) 693–3737 (VOICE) (this is not a toll-free number).

Signed at Washington, DC, this 12th day of February 2010.

Jane Oates,

Assistant Secretary, Employment and Training Administration.

[FR Doc. 2010–3091 Filed 2–18–10; 8:45 am]

BILLING CODE 4510–FR–P

DEPARTMENT OF DEFENSE

GENERAL SERVICES ADMINISTRATION

NATIONAL AERONAUTICS AND SPACE ADMINISTRATION

[OMB Control No. 9000–00xx]

Federal Acquisition Regulation; Submission for OMB Review; Hubzone Program

AGENCY: Department of Defense (DOD), General Services Administration (GSA), and National Aeronautics and Space Administration (NASA).

ACTION: Notice of request for comments regarding a new OMB information clearance.

SUMMARY: Under the provisions of the Paperwork Reduction Act of 1995 (44 U.S.C. Chapter 35), the Federal Acquisition Regulation (FAR) Secretariat will be submitting to the Office of Management and Budget (OMB) a request to review and approve a new information collection requirement regarding Hubzone Program revisions. A request for public comments was published in the **Federal Register** at 74 FR 46984, on September 14, 2009. No comments were received.

Public comments are particularly invited on: Whether this collection of information is necessary for the proper performance of functions of the FAR, and whether it will have practical utility; whether our estimate of the public burden of this collection of information is accurate, and based on valid assumptions and methodology; ways to enhance the quality, utility, and clarity of the information to be collected; and ways in which we can minimize the burden of the collection of information on those who are to respond, through the use of appropriate technological collection techniques or other forms of information technology.

DATES: Submit comments on or before March 22, 2010.

FOR FURTHER INFORMATION CONTACT: Ms. Rhonda Cundiff, Procurement Analyst, Contract Policy Branch, GSA, (202) 219–1813 or e-mail *Rhonda.cundiff@gsa.gov.*

ADDRESSES: Submit comments regarding this burden estimate or any other aspect of this collection of information, including suggestions for reducing this burden to: FAR Desk Officer, OMB, Room 10102, NEOB, Washington, DC 20503, and a copy to the General Services Administration, Regulatory Secretariat (MVPR), 1800 F Street, NW., Room 4041, Washington, DC 20405.

SUPPLEMENTARY INFORMATION:

A. Purpose

This information collection facilitates implementation of a HUBZone Program Federal Acquisition Regulation (FAR) revision as a result of revisions to the Small Business Administration regulations. The revision to the FAR requires the HUBZone offeror to provide the Contracting Officer a copy of the notice required by 13 CFR 126.601 if material changes occur before contract award that could affect its HUBZone eligibility. This notification to the contracting officer ensures that the offeror is still eligible for the award of a HUBZone contract.

B. Annual Reporting Burden

Respondents: 8,000.

Responses per Respondent: 1.

Hours per Response: .25.

Total Burden Hours: 2,000.

Obtaining Copies of Proposals: Requester may obtain a copy of the proposal from the General Services Administration, Regulatory Secretariat (MVPR), 1800 F Street, NW., Room 4041, Washington, DC 20405, telephone (202) 501–4755. Please cite OMB Control No. 9000–00xx, Hubzone Program, in all correspondence.

Dated: February 12, 2010.

Al Matera,

Director, Acquisition Policy Division.

[FR Doc. 2010–3228 Filed 2–18–10; 8:45 am]

BILLING CODE 6820–EP–P

NUCLEAR REGULATORY COMMISSION

Application for a License To Export High-Enriched Uranium

Pursuant to 10 CFR 110.70(c) "Public notice of receipt of an application," please take notice that the Nuclear Regulatory Commission has received the following request for an export license. Copies of the request are available electronically through ADAMS and can be accessed through the Public Electronic Reading Room (PERR) link *http://www.nrc.gov/NRC/ADAMS/index.html* at the NRC Homepage.

A request for a hearing or petition for leave to intervene may be filed within 30 days after publication of this notice in the **Federal Register.** Any request for hearing or petition for leave to intervene shall be served by the requestor or petitioner upon the applicant, the Office of the General Counsel, U.S. Nuclear Regulatory Commission, Washington, DC 20555; the Secretary, U.S. Nuclear Regulatory Commission, Washington, DC 20555; and the Executive Secretary, U.S. Department of State, Washington, DC 20520.

A request for a hearing or petition for leave to intervene may be filed with the NRC electronically in accordance with NRC's E-Filing rule promulgated in August 2007, 72 FR49139 (Aug. 28, 2007). Information about filing electronically is available on the NRC's public Web site at *http://www.nrc.gov/site-help/e-submittals.html.* To ensure timely electronic filing, at least five days prior to the filing deadline, the petitioner/requestor should contact the Office of the Secretary by e-mail at *HEARINGDOCKET@NRC.GOV,* or by calling (301) 415–1677, to request a digital ID certificate and allow for the creation of an electronic docket.

In addition to a request for hearing or petition for leave to intervene, written comments, in accordance with 10 CFR 110.81, should be submitted within thirty (30) days after publication of this notice in the **Federal Register** to Office of the Secretary, U.S. Nuclear Regulatory Commission, Washington, DC 20555, Attention: Rulemaking and Adjudications.

The information concerning this application follows.

NRC EXPORT LICENSE APPLICATION

Name of applicant, date of application, date received, application No., Docket No.	Description of material		End use	Recipient country
	Material type	Total quantity		
DOE/NNSA—Y–12 National Security Complex, February 2, 2010, February 2, 2010, XSNM3622, 11005843.	High-Enriched Uranium (93.35%).	93.5 kilograms uranium (87.3 kilograms U–235).	To fabricate fuel elements in France for use as fuel in the BR–2 reactor in Belgium. The BR–2 reactor is used for research and the production of medical isotopes.	France; Belgium.

Dated this 4th day of February 2010, at Rockville, Maryland.

For the Nuclear Regulatory Commission.

Stephen Dembek,

Acting Deputy Director, Office of International Programs.

[FR Doc. 2010–3232 Filed 2–18–10; 8:45 am]

BILLING CODE 7590–01–P

NUCLEAR REGULATORY COMMISSION

Sunshine Act; Meeting Notice

AGENCY HOLDING THE MEETINGS: Nuclear Regulatory Commission [NRC–2010–0002].

DATES: Week of February 22, 2010.

PLACE: Commissioners' Conference Room, 11555 Rockville Pike, Rockville, Maryland.

STATUS: Public and Closed.

ADDITIONAL ITEMS TO BE CONSIDERED:

Week of February 22, 2010

Tuesday, February 23, 2010

9:25 a.m. Affirmation Session (Public Meeting) (Tentative).

Entergy Nuclear Operations, Inc. (Indian Point Nuclear Generating Unit Nos. 1, 2, and 3); Docket Nos. 50–003–LT–2, 50–247–LT–2, 50–286–LT–2, and 72–51–LT–2. (Request for Hearing on Extension of Time to Complete License Transfer) (Tentative).

This meeting will be Webcast live at the Web address—*http://www.nrc.gov.*

The NRC Commission Meeting Schedule can be found on the Internet at: *http://www.nrc.gov/about-nrc/policy-making/schedule.html.*

* * * * *

The NRC provides reasonable accommodation to individuals with disabilities where appropriate. If you need a reasonable accommodation to participate in these public meetings, or need this meeting notice or the transcript or other information from the public meetings in another format (*e.g.* braille, large print), please notify Angela Bolduc, Chief, Employee/Labor Relations and Work Life Branch, at 301–492–2230, TDD: 301–415–2100, or by e-mail at *angela.bolduc@nrc.gov.* Determinations on requests for

reasonable accommodation will be made on a case-by-case basis.

This notice is distributed electronically to subscribers. If you no longer wish to receive it, or would like to be added to the distribution, please contact the Office of the Secretary, Washington, DC 20555 (301–415–1969), or send an e-mail to *darlene.wright@nrc.gov*.

Dated: February 16, 2010.

Rochelle C. Bavol,

Office of the Secretary.

[FR Doc. 2010–3354 Filed 2–17–10; 4:15 pm]

BILLING CODE 7590–01–P

NUCLEAR REGULATORY COMMISSION

[NRC–2010–0052]

Withdrawal of Regulatory Guide

AGENCY: Nuclear Regulatory Commission.

ACTION: Withdrawal of Regulatory Guide 1.56, "Maintenance of Water Purity in Boiling Water Reactors."

FOR FURTHER INFORMATION CONTACT: Matthew D. Yoder, Division of Component Integrity, Office of Nuclear Reactor Regulation, U.S. Nuclear Regulatory Commission, Washington, DC 20555–0001, telephone 301–415–4017 or e-mail *Matthew.Yoder@nrc.gov*.

SUPPLEMENTAL INFORMATION:

I. Introduction

The U.S. Nuclear Regulatory Commission (NRC or Commission) is withdrawing Regulatory Guide (RG) 1.56, "Maintenance of Water Purity in Boiling Water Reactors," Revision 1, dated July 1978. Revision 1 of RG 1.56 was issued for comment in July 1978 and never finalized. It was intended to support General Design Criterion (GDC) 14, "Reactor Coolant Pressure Boundary" and GDC 31, "Fracture Prevention of Reactor Coolant Pressure Boundary" of Appendix A, "General Design Criteria for Nuclear Power Plants," in Title 10, Part 50, of the *Code of Federal Regulations,* "Domestic Licensing of Production and Utilization Facilities."

RG 1.56 describes an acceptable method for maintaining water purity levels in the reactor coolant in order to ensure that degradation of the reactor coolant pressure boundary is not exacerbated by poor chemistry conditions. However, degradation of the reactor coolant pressure boundary is generally a long-term process and other direct means to monitor and correct reactor coolant pressure boundary degradation exist, which are controlled by regulations and plant technical specifications. For example, in-service inspection of components and primary coolant leakage limits are regulatory requirements that provide direct means to identify degradation of the reactor coolant pressure boundary. Therefore, requirements related to the chemistry program do not constitute initial conditions that are assumed in any design basis accident or transient related to reactor coolant system integrity.

The staff considers water chemistry to be an operational issue for plants. If a licensee frequently repairs or replaces components because poor chemistry practices are causing degradation, then that is a cost the licensee must incur. It is in the licensee's best interest to operate the plant with a chemistry regime that optimizes component performance. There is adequate industry-generated guidance available for licensees to develop a plant-specific water chemistry program. For example, the 2004 revision of the Electric Power Research Institute report BWRVIP–130: "BWR Water Chemistry" provides a framework for plant-specific chemistry programs. The industry routinely updates this guidance to incorporate the latest knowledge and lessons learned in the area of water chemistry.

II. Further Information

The withdrawal of RG 1.56 does not alter any prior or existing licensing commitments or conditions based on its use. The guidance provided in this regulatory guide no longer provides useful information. Regulatory guides may be withdrawn when their guidance is superseded by congressional action or no longer provides useful information.

Regulatory guides are available for inspection or downloading through the NRC's public Web site under "Regulatory Guides" in the NRC's Electronic Reading Room at *http://www.nrc.gov/reading-rm/doc-collections.* Regulatory guides are also available for inspection at the NRC's Public Document Room (PDR), Room O–1 F21, One White Flint North, 11555 Rockville Pike, Rockville, Maryland 20852–2738. The PDR's mailing address is US NRC PDR, Washington, DC 20555–0001. You can reach the staff by telephone at 301–415–4737 or 800–397–4209, by fax at 301–415–3548, and by e-mail to *pdr.resource@nrc.gov*.

Regulatory guides are not copyrighted, and NRC approval is not required to reproduce them.

Dated at Rockville, Maryland, this 4th day of February 2010.

For the Nuclear Regulatory Commission.

Andrea D. Valentin,

Chief, Regulatory Guide Development Branch, Division of Engineering, Office of Nuclear Regulatory Research.

[FR Doc. 2010–3233 Filed 2–18–10; 8:45 am]

BILLING CODE 7590–01–P

OFFICE OF SCIENCE AND TECHNOLOGY POLICY

Consumer Interface With the Smart Grid

AGENCY: Office of Science and Technology Policy (OSTP), Executive Office of the President.

ACTION: Notice; request for public comment.

SUMMARY: With this notice, the Office of Science and Technology Policy (OSTP) within the Executive Office of the President requests input from the public regarding the consumer interface with the Smart Grid. This Request for Information (RFI) will be active from February 23, 2010 to March 12, 2010. Respondents are invited to respond online via the Smart Grid Forum at *http://www.nist.gov/smartgrid/*, or may submit responses via electronic mail. Electronic mail responses will be re-posted on the online forum.

DATES: Comments must be received by 5 p.m. EST on March 12, 2010.

ADDRESSES: Submit comments by one of the following methods:

Smart Grid Forum: http://www.nist.gov/smartgrid/.

Via E-mail: smartgrid@ostp.gov.

Mail: Office of Science and Technology Policy, Attn: Open Government Recommendations, 725 17th Street, Washington, DC 20502.

Comments submitted in response to this notice may be made available to the public online or by alternative means. For this reason, *please do not include in your comments information of a confidential nature, such as sensitive personal information or proprietary information.* If you submit an e-mail comment, your e-mail address will be captured automatically and included as part of the comment that is placed in the public docket and made available on the Internet.

FOR FURTHER INFORMATION CONTACT: Dr. Kevin Hurst, Assistant Director for Energy Technology, Office of Science and Technology Policy, Executive Office of the President, Attn: Open Government, 725 17th Street, NW., Washington, DC 20502, 202–456–7116.

SUPPLEMENTARY INFORMATION:

I. Background

Modernization of the Nation's electric grid is a vital component of the President's comprehensive energy plan, which aims to reduce U.S. dependence on foreign oil, create jobs, and help U.S. industry compete successfully in global markets for clean energy technology.

Seventy-two percent of the Nation's electricity is consumed in buildings, and nearly half of that is in homes. Optimizing building energy consumption, especially during peak load periods, can improve the reliability, security, and efficiency of the electric grid while reducing energy costs to consumers. The "Smart Grid"—a modernized electricity transmission and distribution system involving the increased use of digital information and controls technology—can help to realize these benefits. Demand-side Smart Grid technologies include "smart meters" (which provide two-way, near-real-time data communications between the utility and consumer premises), "smart appliances" (which provide data communications and control options), and "smart interfaces" that can integrate distributed energy resources, demand response resources, or other energy loads and storage devices such as plug-in electric and hybrid electric vehicles.

The Smart Grid will help to provide consumers with the information, automation, and tools they need to control and optimize energy use. This control and optimization requires interoperability and information exchange between the grid and a wide variety of energy-using devices and controllers, such as thermostats, water heaters, appliances, consumer electronics, and energy management systems. The Department of Energy (DOE) Smart Grid Investment Grant program, funded by the American Recovery and Reinvestment Act, is accelerating deployment of smart meters and other components of an advanced electric grid.

In many instances, smart meters will have the capability to communicate near-real-time measurements of electricity usage to the utility and the consumer. In some implementations, data can be provided to the consumer directly from the smart meter (or another monitoring device) through an in-home display or energy management system via a local communications interface. In other implementations, consumers or their authorized agents can obtain their usage data via the internet from an information system at the utility.

One of the goals of the Smart Grid is to enable innovation and competition in new products and services that can help consumers minimize both peak and overall energy usage and save money. To be most effective, the Smart Grid will need to provide not only usage data but also information such as electricity price data and demand response signals to the consumer and energy-using devices in the home. This information could be provided to the consumer's home devices either through the smart meter's local communication interface or through a separate gateway, provided either by the utility or a third-party service provider. In order to clarify the various implementation options, we seek comments on issues related to the demand-side Smart Grid architecture, including the potential costs, benefits, implementation hurdles, and ways in which each option would support open innovation in home energy services.

A robust, secure, and flexible architecture based on open standards is needed for information exchange between the home and the Smart Grid. Section 1305 of the Energy Independence and Security Act of 2007 advises that the Smart Grid interoperability framework be designed to "* * * consider the use of voluntary uniform standards for certain classes of mass-produced electric appliances and equipment for homes and businesses that enable customers, at their election and consistent with applicable State and Federal laws, and are manufactured with the ability to respond to electric grid emergencies and demand response signals * * *". The diversity of communications technologies and standards used by devices in the home presents a significant challenge to achieving interoperability. A balance must be struck between, on the one hand, maximizing innovation and customer choice, and, on the other hand, ensuring reliability and a sufficiently standardized environment so that manufacturers can produce cost-effective Smart Grid-enabled appliances that work anywhere in the Nation. That balance must also include the need for cost-effective Smart Grid infrastructure. In addition, ensuring cyber security in the home-to-grid interface is a critical consideration.

The Smart Grid must provide benefits to a variety of consumers. Consumers who have many energy-using appliances and devices may wish to have the grid interoperate with an existing home area network and a sophisticated home energy management system. Other consumers may not have the desire, skill, or means to configure a home area network and may simply wish to plug in a new, Smart-Grid-enabled appliance and have it automatically communicate with the grid in order to realize energy-saving benefits. The diversity of consumer needs must be considered in the design and deployment of Smart Grid infrastructure and devices.

The Executive Branch is considering ways to ensure that the consumer interface to the Smart Grid achieves the desired goal of providing all consumers with the information they need to control and optimize their energy use in a manner that ensures ease of use, widespread adoption, and innovation. The National Institute of Standards and Technology (NIST), pursuant to the Energy Independence and Security Act of 2007, recently published the first release of an interoperability framework for the Smart Grid (NIST Special Publication 1108, available at *http://www.nist.gov/public_affairs/releases/smartgrid_interoperability_final.pdf*), which includes discussion of these issues and identifies the need for further work to provide solutions.

II. Invitation To Comment

Input is welcome on issues related to the architecture of the consumer interface with the Smart Grid as well as consumer ownership of Smart Grid data. Questions that individuals may wish to address include, but are not limited to the following. As part of your submission, please indicate the question to which your answer responds.

1. Should the smart meter serve as the primary gateway for residential energy usage data, price data, and demand response signals? What are the most important factors in making this assessment, and how might those factors change over time?

2. Should a data gateway other than the smart meter be used for all or a subset of the data described in question 1?

3. If the smart meter, via the utility network, is the primary gateway for the data described in question 1, will it be technically and commercially feasible for consumers and their authorized third-party service providers to access the data easily and in real time?

4. Who owns the home energy usage data? Should individual consumers and their authorized third-party service providers have the right to access energy usage data directly from the meter?

5. How are low-income consumers best served by home-to-grid technology?

6. What alternative architectures involving real-time (or near-real-time) electricity usage and price data are there that could support open innovation in home energy services?

7. Some appliance manufacturers have announced plans to market Smart Grid-enabled appliances in late 2011

provided that appropriate communication standards are defined in 2010. What standard data communications interfaces(s) should be supported by appliances and the smart meter or data gateway so that appliance manufacturers can cost-effectively produce smart appliances that can communicate with the Smart Grid anywhere in the nation? How can communication between smart appliances and the Smart Grid be made "plug and play" for consumers who do not have the skills or means to configure data networks? If gateways or adapters are needed, who should pay for them: The utility or the consumer?

Please note that several important Smart Grid topics—including Federal and State policy hurdles, cyber security, and business case challenges—are beyond the scope of this request, except insofar as they bear on the primary topics identified above. One or more future requests for comment may be organized to obtain input on these additional issues. Discussions of all of the above topics are also ongoing in several forums, including the Smart Grid Interoperability Panel established by NIST and the GridWise Architecture Council established by DOE. Relevant input received through this request will be shared with NIST, DOE, and other interested Federal agencies.

Ted Wackler,

Deputy Chief of Staff.

[FR Doc. 2010–3251 Filed 2–18–10; 8:45 am]

BILLING CODE P

SECURITIES AND EXCHANGE COMMISSION

[Release No. 34–61495; File No. SR–BX–2010–006]

Self-Regulatory Organizations; NASDAQ OMX BX, Inc.; Notice of Filing and Immediate Effectiveness of Proposed Rule Change To Amend Rules 2848, 3330, and 9810 To Reflect Changes to Corresponding FINRA Rules

February 4, 2010.

Pursuant to Section 19(b)(1) of the Securities Exchange Act of 1934 ("Act"),[1] and Rule 19b–4 thereunder,[2] notice is hereby given that on January 14, 2010, NASDAQ OMX BX, Inc. (the "Exchange" or "BX") filed with the Securities and Exchange Commission ("Commission") the proposed rule change as described in Items I, II, and III below, which Items have been substantially prepared by the Exchange. The Exchange has designated the proposed rule change as constituting a non-controversial rule change under Rule 19b–4(f)(6) under the Act,[3] which renders the proposal effective upon filing with the Commission. The Commission is publishing this notice to solicit comments on the proposed rule change from interested persons.

I. Self-Regulatory Organization's Statement of the Terms of the Substance of the Proposed Rule Change

The Exchange is filing this proposed rule change to amend BX Rules 2848 (Communications with the Public and Customers Concerning Index Warrants, Currency Index Warrants, and Currency Warrants); 3330 (Payment Designed to Influence Market Prices, Other than Paid Advertising); and 9810 (Initiation of Proceeding) to reflect recent changes to corresponding rules of the Financial Industry Regulatory Authority ("FINRA"). The text of the proposed rule change is available at *http://nasdaqomxbx.cchwallstreet.com*, the Exchange's principal office, and at the Commission's Public Reference Room.

II. Self-Regulatory Organization's Statement of the Purpose of, and Statutory Basis for, the Proposed Rule Change

In its filing with the Commission, the Exchange included statements concerning the purpose of and basis for the proposed rule change and discussed any comments it received on the proposed rule change. The text of these statements may be examined at the places specified in Item IV below. The Exchange has prepared summaries, set forth in Sections A, B, and C below, of the most significant aspects of such statements.

A. Self-Regulatory Organization's Statement of the Purpose of, and Statutory Basis for, the Proposed Rule Change

1. Purpose

BX based much of its rules on those of The NASDAQ Stock Market LLC ("NASDAQ"). Similarly, many of NASDAQ's rules are based on rules of FINRA (formerly the National Association of Securities Dealers ("NASD")). As a consequence, many of BX's rules closely mirror those of FINRA. During 2008, FINRA embarked on an extended process of moving rules formerly designated as "NASD Rules" into a consolidated FINRA rulebook. In most cases, FINRA has renumbered these rules, and in some cases has substantively amended them. Accordingly, BX also proposes to initiate a process of modifying its rulebook to ensure that BX rules corresponding to FINRA/NASD rules continue to mirror them as closely as practicable. In some cases, it will not be possible for the rule numbers of BX rules to mirror corresponding FINRA rules, because existing or planned BX rules make use of those numbers. However, wherever possible, BX plans to update its rules to reflect changes to corresponding FINRA rules.

This filing addresses BX Rules 2848 (Communications with the Public and Customers Concerning Index Warrants, Currency Index Warrants, and Currency Warrants); 3330 (Payment Designed to Influence Market Prices, Other than Paid Advertising); and 9810 (Initiation of Proceeding) to update cross-references to corresponding rules of FINRA.

In SR–FINRA–2009–078,[4] FINRA made changes that reflected, among other things, incorporation into the consolidated FINRA rulebook of NASD Rule 3330 as FINRA Rule 5230 (Payments Involving Publications that Influence the Market Price of a Security);[5] NASD Rule 2330 as FINRA Rule 2150 (Improper Use of Customers' Securities or Funds; Prohibition Against Guarantees and Sharing in Accounts);[6] and NASD Rule 2220 as FINRA Rule 2220 (Options Communications).[7]

FINRA Rule 2220, like former NASD Rule 2220, sets forth a member's obligations with respect to its options communications with the public and: (a) uses, to the extent appropriate, the same terminology and definitions as in FINRA's general rules on communications with the public; (b) makes the requirements for principal review of correspondence concerning options the same as for correspondence generally; and (c) updates the standards on the content of communications that precede the delivery of the options disclosure document (ODD).

BX is, by this filing, updating references in its Rule 2848 from NASD Rule 2220 to FINRA Rule 2220.

[1] 15 U.S.C. 78s(b)(1).

[2] 17 CFR 240.19b–4.

[3] 17 CFR 240.19b–4(f)(6).

[4] *See* Securities Exchange Act Release No. 61087 (December 1, 2009), 74 FR 65190 (December 9, 2009) (SR–FINRA–2009–078) (notice of filing and immediate effectiveness).

[5] *See* Securities Exchange Act Release No. 60648 (September 10, 2009), 74 FR 47837 (September 17, 2009) (SR–FINRA–2009–048) (order approving adoption of FINRA Rule 5230).

[6] *See* Securities Exchange Act Release No. 60701 (September 21, 2009); 74 FR 49425 (September 28, 2009) (SR–FINRA–2009–014) (order approving adoption of FINRA Rule 2150).

[7] *See* Securities Exchange Act Release No. 60534 (August 19, 2009), 74 FR 44410 (August 28, 2009) (SR–FINRA–2009–036) (order approving adoption of FINRA Rules 2124, 2220, 4370, and 5250).

NASD Rule 3330 prohibits a member from giving, or offering to give, anything of value to any person for the purpose of influencing or rewarding the action of such person in connection with the publication or circulation in any newspaper, investment service, or similar publication, of any matter that has, or is intended to have, an effect upon the market price of any security; and provides an exception for any matter that is clearly distinguishable as paid advertising. As part of transferring NASD Rule 3330 into the consolidated FINRA rulebook as FINRA Rule 5230, FINRA proposed two changes to the rule to modernize its terms and clarify its scope by: (a) Updating the list of media to which the rule refers to include electronic and other types of media, including magazines, Web sites, and television programs; and (b) expanding the exceptions in the rule beyond paid advertising to also include compensation paid in connection with research reports and communications published in reliance on Section 17(b) of the Securities Act of 1933 (the "1933 Act").

BX is, by this filing, re-numbering its Rule 3330 to Rule 5230 and amending the text to conform to the changes reflected in FINRA Rule 5230.

NASD Rule 2330 prohibits members and associated persons from: (a) Making improper use of a customer's securities or funds; (b) guaranteeing a customer against loss in connection with any securities transaction or in any securities account of the customer; and (c) sharing in the profits or losses in the customer's account except under certain limited conditions specified in the Rule. As part of transferring NASD Rule 2330 into the consolidated FINRA rulebook as FINRA Rule 2150, FINRA proposed minor changes to Rule 2150(c) and added Supplementary Information to the rule that codified existing staff guidance concerning the inapplicability of the rule to certain guarantees, permissible reimbursement by a member of certain losses, correction of *bona fide* errors, and preservation of written authorizations.[8]

BX has proposed, in a recent immediately effective filing,[9] to re-number its Rule 2330 and IM–2330 to Rule 2150 and IM–2150, respectively; clarify cross-references in its rule and IM; and reflect the changes to FINRA Rule 2150. BX is, by this filing, clarifying the cross-reference in its Rule 9810 to BX Equity Rule 2150.

2. Statutory Basis

The Exchange believes that the proposed rule change is consistent with the provisions of Section 6 of the Act,[10] in general, and with Sections 6(b)(5) of the Act,[11] in particular, in that the proposal is designed to prevent fraudulent and manipulative acts and practices, to promote just and equitable principles of trade, to foster cooperation and coordination with persons engaged in regulating, clearing, settling, processing information with respect to, and facilitating transactions in securities, to remove impediments to and perfect the mechanism of a free and open market and a national market system, and, in general, to protect investors and the public interest. The proposed changes will conform BX Rules 2848, 3330 and 9810 to recent changes made to several corresponding FINRA rules, to promote application of consistent regulatory standards.

B. Self-Regulatory Organization's Statement on Burden on Competition

The Exchange does not believe that the proposed rule change will result in any burden on competition that is not necessary or appropriate in furtherance of the purposes of the Act, as amended.

C. Self-Regulatory Organization's Statement on Comments on the Proposed Rule Change Received From Members, Participants, or Others

Written comments were neither solicited nor received.

III. Date of Effectiveness of the Proposed Rule Change and Timing for Commission Action

Because the foregoing proposed rule change does not: (i) Significantly affect the protection of investors or the public interest; (ii) impose any significant burden on competition; and (iii) become operative for 30 days from the date on which it was filed, or such shorter time as the Commission may designate, it has become effective pursuant to Section 19(b)(3)(A) of the Act[12] and Rule 19b–4(f)(6) thereunder.[13]

At any time within 60 days of the filing of the proposed rule change, the Commission may summarily abrogate such rule change if it appears to the Commission that such action is necessary or appropriate in the public interest, for the protection of investors, or otherwise in furtherance of the purposes of the Act.

IV. Solicitation of Comments

Interested persons are invited to submit written data, views, and arguments concerning the foregoing, including whether the proposed rule change is consistent with the Act. Comments may be submitted by any of the following methods:

Electronic Comments

- Use the Commission's Internet comment form (*http://www.sec.gov/rules/sro.shtml*); or
- Send an e-mail to *rule-comments@sec.gov.* Please include File Number SR–BX–2010–006 on the subject line.

Paper Comments

- Send paper comments in triplicate to Elizabeth M. Murphy, Secretary, Securities and Exchange Commission, 100 F Street, NE., Washington, DC 20549–1090.

All submissions should refer to File Number SR–BX–2010–006. This file number should be included on the subject line if e-mail is used. To help the Commission process and review your comments more efficiently, please use only one method. The Commission will post all comments on the Commission's Internet Web site (*http://www.sec.gov/rules/sro.shtml*). Copies of the submission, all subsequent amendments, all written statements with respect to the proposed rule change that are filed with the Commission, and all written communications relating to the proposed rule change between the Commission and any person, other than those that may be withheld from the public in accordance with the provisions of 5 U.S.C. 552, will be available for Web site viewing and printing in the Commission's Public Reference Room, 100 F Street, NE., Washington, DC 20549, on official business days between the hours of 10 a.m. and 3 p.m. Copies of such filing also will be available for inspection and copying at the principal office of the Exchange. All comments received will

[8] Supplementary Material to FINRA Rule 2150 generally provides that (i) a "guarantee" extended to all holders of a security by an issuer as part of that security generally would not be subject to the prohibition against guarantees; (ii) the rule does not preclude a member from determining on an after-the-fact basis to reimburse a customer for transaction losses, provided however that the member shall comply with all reporting requirements that may be applicable to such payment; (iii) the rule does not preclude a member from correcting a *bona fide* error; and (iv) a member must preserve the required written authorization(s) for a period of at least six years after the date the account is closed.

[9] *See* Securities Exchange Act Release No. 61129 (December 8, 2009), 74 FR 66188 (December 14, 2009) (SR–BX–2009–080) (notice of filing and immediate effectiveness).

[10] 15 U.S.C. 78f.

[11] 15 U.S.C. 78f(b)(5).

[12] 15 U.S.C. 78s(b)(3)(A).

[13] 17 CFR 240.19b–4(f)(6).

be posted without change; the Commission does not edit personal identifying information from submissions. You should submit only information that you wish to make available publicly. All submissions should refer to File Number SR–BX–2010–006, and should be submitted on or before March 12, 2010.

For the Commission, by the Division of Trading and Markets, pursuant to delegated authority.[14]

Florence E. Harmon,

Deputy Secretary.

[FR Doc. 2010–3140 Filed 2–18–10; 8:45 am]

BILLING CODE 8011–01–P

SECURITIES AND EXCHANGE COMMISSION

[Release No. 34–61510; File No. SR–FINRA–2010–003]

Self-Regulatory Organizations; Financial Industry Regulatory Authority, Inc.; Notice of Filing of Proposed Rule Change, as Modified by Amendment No. 1, Relating to Trade Reporting of OTC Equity Securities and Restricted Equity Securities

February 5, 2010.

Pursuant to Section 19(b)(1) of the Securities Exchange Act of 1934 ("Act")[1] and Rule 19b–4 thereunder,[2] notice is hereby given that on January 15, 2010, Financial Industry Regulatory Authority, Inc. ("FINRA") (f/k/a National Association of Securities Dealers, Inc. ("NASD")) filed with the Securities and Exchange Commission ("SEC" or "Commission") the proposed rule change as described in Items I, II, and III below, which Items have been prepared by FINRA. On February 5, 2010, FINRA filed Amendment No. 1 to the proposed rule change.[3] The Commission is publishing this notice to solicit comments on the proposed rule change, as modified by Amendment No. 1, from interested persons.

I. Self-Regulatory Organization's Statement of the Terms of Substance of the Proposed Rule Change

FINRA is proposing to amend the FINRA OTC Reporting Facility ("ORF") Rules and the PORTAL Rules (FINRA Rule 6630 Series) regarding the reporting requirements for restricted equity securities; update the definition of "OTC Equity Security;" and clarify member reporting obligations with respect to certain trades reported on or through an exchange.

The text of the proposed rule change is available on FINRA's Web site at *http://www.finra.org,* at the principal office of FINRA, and at the Commission's Public Reference Room.

II. Self-Regulatory Organization's Statement of the Purpose of, and Statutory Basis for, the Proposed Rule Change

In its filing with the Commission, FINRA included statements concerning the purpose of and basis for the proposed rule change and discussed any comments it received on the proposed rule change. The text of these statements may be examined at the places specified in Item IV below. FINRA has prepared summaries, set forth in sections A, B, and C below, of the most significant aspects of such statements.

A. Self-Regulatory Organization's Statement of the Purpose of, and Statutory Basis for, the Proposed Rule Change

1. Purpose

The proposed rule change includes several amendments to the reporting provisions regarding the ORF. In general, the proposed rule change amends the definition of "OTC Equity Security" in the FINRA trade reporting rules to address the cessation of the PORTAL Market and clarifies the scope of the ORF rules. The proposed rule change also makes conforming changes to other FINRA rules, including the Order Audit Trail System ("OATS") rules.

(a) Amendments to the ORF Rules

In 1990, the SEC adopted Rule 144A ("SEC Rule 144A") under the Securities Act of 1933[4] ("Securities Act") to establish a safe harbor for the private resale of "restricted securities" to "qualified institutional buyers" ("QIBs").[5] At the same time, FINRA (then NASD) created the PORTAL Market to serve as a system for quoting, trading, and reporting trades in certain designated restricted securities that were eligible for resale under SEC Rule 144A ("PORTAL securities").[6] In September 2008, the NASDAQ Stock Market ("NASDAQ") ceased the operation of the PORTAL Market.[7] NASDAQ explained in the rule filing that it is taking a minority stake in a consortium that will control and operate a new electronic platform for handling transactions in SEC Rule 144A-eligible securities.[8] On October 26, 2009, NASDAQ filed a proposed rule change with the Commission for immediate effectiveness terminating NASDAQ's PORTAL security designation process and removing rules related to the PORTAL Market from its rulebook.[9] As a result, NASDAQ no longer accepts new applications for debt or equity securities seeking PORTAL designation.[10]

FINRA's transaction reporting rules for restricted equity securities are currently tied to whether the security is designated for inclusion in the PORTAL Market. Specifically, FINRA's general transaction reporting rules for over-the-counter equity securities specifically exclude restricted securities and PORTAL securities from the reporting requirements.[11] FINRA's PORTAL rules (FINRA Rule 6630 Series) require that transactions in PORTAL equity securities be reported to the ORF no later than 6:30 p.m. Eastern Time.[12]

[14] 17 CFR 200.30–3(a)(12).

[1] 15 U.S.C. 78s(b)(1).

[2] 17 CFR 240.19b–4.

[3] Amendment No. 1 clarifies the proposed revision to FINRA Rule 4560. *See infra* note 20.

[4] 17 CFR 230.144A.

[5] *See* Securities Act Release No. 6862 (April 23, 1990), 55 FR 17933 (April 30, 1990). For the purpose of SEC Rule 144A, a QIB is generally defined as any institution acting for its own account, or for the accounts of other QIBs, that in the aggregate owns and invests on a discretionary basis at least $100 million in securities of issuers that are not affiliated with the institution.

[6] *See* Securities Exchange Act Release No. 27956 (April 27, 1990), 55 FR 18781 (May 4, 1990).

[7] *See* Securities Exchange Act Release No. 58638 (September 24, 2008), 73 FR 57188 (October 1, 2008). As part of the separation of NASDAQ from FINRA, certain functionality relating to PORTAL, including the qualification and designation of PORTAL securities, became part of NASDAQ's rules and were eliminated from the FINRA rules. *See* Securities Exchange Act Release No. 53128 (January 13, 2006), 71 FR 3550 (January 23, 2006).

[8] In addition to NASDAQ ceasing operation of the PORTAL Market, the Commission has also approved the deletion of the Depository Trust Company ("DTC") requirement that a SEC Rule 144A security, other than Investment Grade Securities, be included in an "SRO Rule 144A System" in order to be eligible for DTC's deposit, book-entry delivery, and other depository services. *See* Securities Exchange Act Release No. 59384 (February 11, 2009), 74 FR 7941 (February 20, 2009). The PORTAL Market was the only "SRO Rule 144A System." *Id.*

[9] Securities Exchange Act Release No. 60991 (November 12, 2009), 74 FR 60006 (November 19, 2009).

[10] *See id.* NASDAQ noted in the filing that nothing in the proposal was "intended to impact securities previously designated as PORTAL securities or alter any existing regulatory obligation applicable to such securities, including, but not limited to, any trade reporting obligation imposed by any self-regulatory organization." *Id.*

[11] *See* FINRA Rule 6400 Series.

[12] FINRA Rule 6633(a). The proposed rule change is limited in scope to equity securities and would not affect the Trade Reporting and Compliance Engine Service ("TRACE") or the reporting requirements with respect to transactions in debt securities. With respect to PORTAL securities that are debt securities, FINRA Rule 6633(b) currently requires members to report secondary market transactions to TRACE in accordance with the FINRA Rule 6700 Series. Thus, under current FINRA rules, reporting obligations for debt securities are set forth in the TRACE rules rather

However, this requirement applies only to those restricted equity securities that are designated for inclusion in the PORTAL Market. Thus, the cessation of the operation of the PORTAL Market and the designation of securities as PORTAL securities creates a gap in FINRA's transaction reporting requirements for restricted equity securities that are traded pursuant to SEC Rule 144A.

FINRA believes it is appropriate to continue to receive information regarding transactions in restricted equity securities traded pursuant to SEC Rule 144A for audit trail and other regulatory purposes. FINRA is therefore proposing to eliminate the current PORTAL reporting rules [13] and amend the ORF rules to include reporting requirements for all equity securities that are "restricted securities" under Rule 144(a)(3) of the Securities Act and that are traded pursuant to SEC Rule 144A, irrespective of whether they are designated as PORTAL securities. Under the proposed rule change, transactions in all restricted equity securities effected pursuant to SEC Rule 144A would generally be required to be reported to the ORF no later than 8:00 p.m. Eastern Time without interruption.[14] Transactions in restricted equity securities effected pursuant to SEC Rule 144A and executed between 8:00 p.m. and midnight would be required to be reported the following business day (T+1) by 8:00 p.m.

In addition to the changes relating to restricted equity securities, FINRA is proposing clarifying changes to the definition of "OTC Equity Security" to delete the outdated reference to securities that "qualify for real-time trade reporting" and, instead, to define the term as any equity security that is not an "NMS stock" as defined by the SEC in Regulation NMS.[15] The proposed rule change will also eliminate the defined term "non-exchange-listed security" from Rule 6420.[16] The effect of these changes is that any security or class of securities for which transaction reports are collected, processed, and made available pursuant to an effective transaction reporting plan will be excluded from the definition of "OTC Equity Security" in Rule 6420.

The proposed rule change also amends the ORF rules to address explicitly transactions in OTC Equity Securities that are executed on an exchange. FINRA's trade reporting rules historically have been limited to only trades executed "otherwise than on an exchange." [17] For example, the FINRA/NASDAQ TRF Rules, the FINRA/NYSE TRF Rules, and the ADF Rules all include an exception from the reporting obligations for transactions reported on or through an exchange.[18] These rules collectively provide for the submission of trade reports to FINRA for transactions in NMS stocks only if the transaction is executed over the counter.

FINRA Rule 6622 sets forth the requirements for members regarding the submission of transaction reports to the ORF for transactions in OTC Equity Securities. While, as discussed above, the FINRA TRF and ADF rules explicitly except transactions executed on or through an exchange, the ORF rules do not include a similar exception for transactions in otherwise eligible securities that are reported on or through an exchange.[19] Thus, FINRA proposes to amend FINRA Rule 6622 to explicitly include an exception for transactions in OTC Equity Securities reported on or through an exchange. In addition, the proposed changes to Rule 6420(k) and Rule 6610 further clarify that transactions in OTC Equity Securities must be reported to the ORF where such transactions are executed otherwise than on or through an exchange.

(b) Amendments to the OATS Rules

FINRA is proposing to conform the definition of "OTC equity security" in Rule 7410 of the OATS rules to the proposed definition in Rule 6420.[20] Under the OATS rules, members are required to record and report order information for transactions in equity securities listed on NASDAQ and for "OTC equity securities." [21] For purposes of the OATS rules, Rule 7410(l) defines "OTC equity security" as any equity security that: (1) is not listed on a national securities exchange, or (2) is listed on one or more regional stock exchanges and does not qualify for dissemination of transaction reports via the facilities of the Consolidated Tape. The rule currently excludes direct participation program securities from the scope of the OATS requirements, and the proposed rule change will maintain this exclusion.[22] The proposed change will not result in any change to the scope of securities required to be reported to OATS. By using substantially similar definitions in both rule series, FINRA will ensure that the appropriate types of securities are addressed throughout FINRA's order reporting, quotation, and trade reporting rules and that key terminology reflects current market structure and trends.

FINRA will announce the effective date of the proposed rule change in a *Regulatory Notice* to be published no

than the PORTAL rules. The proposed rule change deletes FINRA Rule 6633(b); however, the deletion of this provision does not affect the reporting obligations with respect to transactions in any debt security.

[13] In addition to the reporting rules, FINRA Rule 6635 specifies which FINRA rules are and are not applicable to transactions and business activities relating to PORTAL securities. FINRA is proposing to retain Rule 6635 as FINRA Rule 6630 to maintain the status quo with respect to the application of FINRA rules to those securities previously designated as PORTAL securities prior to October 26, 2009.

[14] FINRA Rule 6633(a)(2) currently requires that transactions in PORTAL equity securities be reported to the ORF "no later than 6:30 p.m. Eastern Time (or the end of the OTC Reporting Facility reporting session that is in effect at that time)." Since December 4, 2006, the ORF reporting session has remained open until 8:00 p.m. Eastern Time. *See* Securities Exchange Act Release No. 54773 (November 17, 2006), 71 FR 68665 (November 27, 2006); *see also* Nasdaq Head Trader Alert 2006–120 (August 23, 2006). The proposed rule change amends the time deadline reference in the rule to reflect the current hours of operation.

[15] Rule 600 of Regulation NMS defines "NMS stock" as any NMS security other than an option. "NMS security" is defined as "any security or class of securities for which transaction reports are collected, processed, and made available pursuant to an effective transaction reporting plan, or an effective national market system plan for reporting transactions in listed options." *See* 17 CFR 242.600(b)(46), 242.600(b)(47).

[16] FINRA Rule 6440 (Submission of SEA Rule 15c2–11 Information on Non-Exchange-Listed Securities) and NASD Rule 2320(f), which is often referred to as the Three Quote Rule, use the term "non-exchange-listed security." Because the proposed rule change deletes the term "non-exchange-listed security" from Rule 6420, the proposed rule change also amends FINRA Rule 6440 and NASD Rule 2320(f) to define the term for purposes of those rules. The proposed definition in each rule is identical to the definition as it appeared in FINRA Rule 6420. Consequently, there is no change in the application of either rule as a result of the proposed rule change.

[17] *See e.g.,* FINRA Rule 6100, 6200, and 6300 Series.

[18] *See* FINRA Rules 6282(i)(1)(C), 6380A(e)(1)(C), 6380B(e)(1)(C).

[19] The ORF Rules do include an exception for transactions in foreign equity securities when the transaction is executed on and reported to a foreign securities exchange or the transaction is executed over the counter in a foreign country and is reported to the regulator of securities markets for that country. *See* FINRA Rule 6622(g).

[20] In Amendment No. 1, FINRA states as follows: "The proposed rule change eliminates the separate definition of "OTC Equity Security" in FINRA Rule 4560 (Short-Interest Reporting). Currently, the PORTAL Rules carve out PORTAL securities from the record keeping and reporting requirements of Rule 4560. *See* Rule 6635(d). Consistent with this existing exclusion for PORTAL securities, FINRA is proposing to amend Rule 4560 to exclude from the short-interest record keeping and reporting requirements all restricted equity securities, such that equity securities that are currently PORTAL securities would continue to be excepted from the record keeping and reporting requirements as well as any other restricted equity securities."

[21] *See* FINRA Rules 7440 and 7450.

[22] In addition, the proposed rule change codifies prior FINRA guidance that the OATS rules do not apply to orders for restricted equity securities. *See Regulatory Notice* 06–70 n.2 (December 2006).

later than 60 days following Commission approval. The effective date will be 30 days following publication of the *Regulatory Notice* announcing Commission approval.

2. Statutory Basis

FINRA believes that the proposed rule change is consistent with the provisions of Section 15A(b)(6) of the Act,[23] which requires, among other things, that FINRA rules must be designed to prevent fraudulent and manipulative acts and practices, to promote just and equitable principles of trade, and, in general, to protect investors and the public interest. FINRA believes that the proposed rule change will ensure that FINRA continues to receive important information regarding transactions in restricted securities traded pursuant to SEC Rule 144A.

FINRA believes that the other proposed changes to the definition of "OTC Equity Security" will ensure that the appropriate types of securities are addressed in the applicable FINRA rules and that key terminology reflects current market structure and trends.

B. Self-Regulatory Organization's Statement on Burden on Competition

FINRA does not believe that the proposed rule change will result in any burden on competition that is not necessary or appropriate in furtherance of the purposes of the Act.

C. Self-Regulatory Organization's Statement on Comments on the Proposed Rule Change Received From Members, Participants or Others

Written comments were neither solicited nor received.

III. Date of Effectiveness of the Proposed Rule Change and Timing for Commission Action

Within 35 days of the date of publication of this notice in the **Federal Register** or within such longer period (i) as the Commission may designate up to 90 days of such date if it finds such longer period to be appropriate and publishes its reasons for so finding or (ii) as to which the self-regulatory organization consents, the Commission will:

(A) by order approve such proposed rule change, or

(B) institute proceedings to determine whether the proposed rule change should be disapproved.

IV. Solicitation of Comments

Interested persons are invited to submit written data, views, and arguments concerning the foregoing, including whether the proposed rule change is consistent with the Exchange Act. Comments may be submitted by any of the following methods:

Electronic Comments

- Use the Commission's Internet comment form (*http://www.sec.gov/rules/sro.shtml*); or
- Send an e-mail to *rule-comments@sec.gov.* Please include File Number SR–FINRA–2010–003 on the subject line.

Paper Comments

- Send paper comments in triplicate to Elizabeth M. Murphy, Secretary, Securities and Exchange Commission, 100 F Street, NE., Washington, DC 20549–1090.

All submissions should refer to File Number SR–FINRA–2010–003. This file number should be included on the subject line if e-mail is used. To help the Commission process and review your comments more efficiently, please use only one method. The Commission will post all comments on the Commission's Internet Web site (*http://www.sec.gov/rules/sro.shtml*). Copies of the submission,[24] all subsequent amendments, all written statements with respect to the proposed rule change that are filed with the Commission, and all written communications relating to the proposed rule change between the Commission and any person, other than those that may be withheld from the public in accordance with the provisions of 5 U.S.C. 552, will be available for Web site viewing and printing in the Commission's Public Reference Room, 100 F Street, NE., Washington, DC 20549, on official business days between the hours of 10 a.m. and 3 p.m. Copies of the filing also will be available for inspection and copying at the principal office of FINRA. All comments received will be posted without change; the Commission does not edit personal identifying information from submissions. You should submit only information that you wish to make available publicly. All submissions should refer to File Number SR–FINRA–2010–003 and should be submitted on or before March 12, 2010.

For the Commission, by the Division of Trading and Markets, pursuant to delegated authority.[25]

Florence E. Harmon,

Deputy Secretary.

[FR Doc. 2010–3142 Filed 2–18–10; 8:45 am]

BILLING CODE 8011–01–P

[23] 15 U.S.C. 78*o*–3(b)(6).

[24] The text of the proposed rule change is available on the Commission's Web site at *http://www.sec.gov/.*

[25] 17 CFR 200.30–3(a)(12).

SECURITIES AND EXCHANGE COMMISSION

[Release No. 34–61513; File No. SR–FINRA–2010–008]

Self-Regulatory Organizations; Financial Industry Regulatory Authority, Inc.; Notice of Filing and Immediate Effectiveness of Proposed Rule Change To Amend Incorporated NYSE Rule 312(g)(1)

February 12, 2010.

Pursuant to Section 19(b)(1) of the Securities Exchange Act of 1934 ("Act") [1] and Rule 19b–4 thereunder,[2] notice is hereby given that on February 4, 2010, Financial Industry Regulatory Authority, Inc. ("FINRA") filed with the Securities and Exchange Commission ("SEC" or "Commission") the proposed rule change as described in Items I and II below, which Items have been prepared by FINRA. FINRA has designated the proposed rule change as constituting a "non-controversial" rule change under paragraph (f)(6) of Rule 19b–4 under the Act,[3] which renders the proposal effective upon receipt of this filing by the Commission. The Commission is publishing this notice to solicit comments on the proposed rule change from interested persons.

I. Self-Regulatory Organization's Statement of the Terms of Substance of the Proposed Rule Change

FINRA proposes to make a technical change to the FINRA rulebook. FINRA proposes to amend Incorporated NYSE Rule 312(g)(1) so as to delete certain provisions that are rendered obsolete by the adoption of new FINRA Rule 4110 in FINRA's consolidated rulebook ("Consolidated FINRA Rulebook").[4]

[1] 15 U.S.C. 78s(b)(1).

[2] 17 CFR 240.19b–4.

[3] 17 CFR 240.19b–4(f)(6).

[4] *See Regulatory Notice* 09–71 (December 2009) (SEC Approves Consolidated FINRA Rules Governing Financial Responsibility). FINRA announced in *Regulatory Notice* 09–71 that the new financial responsibility rules will be implemented on February 8, 2010.

See also Securities Exchange Act Release No. 60933 (November 4, 2009), 74 FR 58334 (November 12, 2009) (Order Granting Approval to Proposed Rule Change; File No. SR–FINRA–2008–067); Securities Exchange Act Release No. 61408 (January 22, 2010), 75 FR 4596 (January 28, 2010) (Notice of

Proposed new language is italicized; proposed deletions are in brackets:

* * * * *

Rule 312. Changes Within Member Organizations

(a) through (f) No Change.

(g) A member corporation shall not without the prior written approval of the Exchange:

(1) [Reduce its capital or purchase or redeem any shares of any class of its stock or] *I*[i]n any way amend its charter, certificate of incorporation or by-laws[, and the Exchange may at any time in its discretion require the corporation to restore or increase capital or surplus, or both].

(2) through (3) No Change.

The Exchange will approve any action described in (1), (2) or (3) above unless it determines that such action will impair the financial responsibility or operational capability of the member corporation.

(h) through (j) No Change.

* * * * *

II. Self-Regulatory Organization's Statement of the Purpose of, and Statutory Basis for, the Proposed Rule Change

In its filing with the Commission, FINRA included statements concerning the purpose of and basis for the proposed rule change and discussed any comments it received on the proposed rule change. The text of these statements may be examined at the places specified in Item IV below. FINRA has prepared summaries, set forth in sections A, B, and C below, of the most significant aspects of such statements.

A. Self-Regulatory Organization's Statement of the Purpose of, and Statutory Basis for, the Proposed Rule Change

1. Purpose

FINRA proposes to make a technical change to the FINRA rulebook.[5] FINRA proposes to delete from Incorporated NYSE Rule 312(g)(1) the phrases that read "[r]educe its capital or purchase or redeem any shares of any class of its stock or" and "and the Exchange may at any time in its discretion require the corporation to restore or increase capital or surplus, or both." FINRA is proposing the rule change because the Commission has approved for inclusion in the Consolidated FINRA Rulebook a set of new financial responsibility rules that, among other things, regulate withdrawals of equity capital by members. Accordingly, the new FINRA rules render the above-mentioned Incorporated NYSE rule provisions obsolete.[6] Specifically:

- New FINRA Rule 4110(c)(1) prohibits a member from withdrawing equity capital for a period of one year from the date such equity capital is contributed, unless otherwise permitted by FINRA in writing. The rule provides that, subject to the requirements of FINRA Rule 4110(c)(2), members are not precluded from withdrawing profits earned. FINRA Rule 4110(c)(2) prohibits any carrying or clearing member,[7] without the prior written approval of FINRA, from withdrawing capital, paying a dividend or effecting a similar distribution that would reduce the member's equity, or making any unsecured advance or loan to a stockholder, partner, sole proprietor, employee or affiliate, where such withdrawals, payments, reductions, advances or loans in the aggregate, in any 35 rolling calendar day period, on a net basis, would exceed 10 percent of the member's excess net capital.
- New FINRA Rule 4110(a) provides that, when necessary for the protection of investors or in the public interest, FINRA may, at any time or from time to time with respect to a particular carrying or clearing member or all carrying or clearing members, pursuant to authority exercised by FINRA's Executive Vice President charged with oversight for financial responsibility, or his or her written officer delegate, prescribe greater net capital or net worth requirements than those otherwise applicable, including more stringent treatment of items in computing net capital or net worth, or require such member to restore or increase its net worth. The rule provides that, in any such instance, FINRA shall issue a notice pursuant to new FINRA Rule 9557.

FINRA has filed the proposed rule change for immediate effectiveness and has requested that the SEC waive the requirement that the proposed rule change not become operative for 30 days after the date of the filing, such that FINRA can implement the proposed rule change on February 8, 2010.

2. Statutory Basis

FINRA believes that the proposed rule change is consistent with the provisions of Section 15A(b)(6) of the Act,[8] which requires, among other things, that FINRA rules must be designed to prevent fraudulent and manipulative acts and practices, to promote just and equitable principles of trade, and, in general, to protect investors and the public interest. FINRA believes that the proposed rule change is consistent with the purposes of the Act because it will provide greater clarity to members and the public regarding FINRA's rules.

B. Self-Regulatory Organization's Statement on Burden on Competition

FINRA does not believe that the proposed rule change will result in any burden on competition that is not necessary or appropriate in furtherance of the purposes of the Act.

C. Self-Regulatory Organization's Statement on Comments on the Proposed Rule Change Received From Members, Participants or Others

Written comments were neither solicited nor received.

III. Date of Effectiveness of the Proposed Rule Change and Timing for Commission Action

Because the foregoing proposed rule change does not: (i) Significantly affect the protection of investors or the public interest; (ii) impose any significant burden on competition; and (iii) become operative for 30 days from the date on which it was filed, or such shorter time as the Commission may designate, it has become effective pursuant to Section 19(b)(3)(A) of the Act[9] and Rule 19b–4(f)(6) thereunder.[10]

A proposed rule change filed under 19b–4(f)(6) normally does not become operative prior to 30 days after the date of filing. However, Rule 19b–4(f)(6)(iii)[11] permits the Commission to

Filing and Immediate Effectiveness of Proposed Rule Change; File No. SR–FINRA–2010–004).

[5] The current FINRA rulebook consists of (1) FINRA Rules; (2) NASD Rules; and (3) rules incorporated from NYSE ("Incorporated NYSE Rules") (together, the NASD Rules and Incorporated NYSE Rules are referred to as the "Transitional Rulebook"). While the NASD Rules generally apply to all FINRA members, the Incorporated NYSE Rules apply only to those members of FINRA that are also members of the NYSE ("Dual Members"). The FINRA Rules apply to all FINRA members, unless such rules have a more limited application by their terms. For more information about the rulebook consolidation process, *see Information Notice,* March 12, 2008 (Rulebook Consolidation Process).

[6] *See* note 4.

[7] FINRA Rule 4110.02 provides that, for purposes of the rule, all requirements that apply to a member that clears or carries customer accounts also apply to any member that, operating pursuant to the exemptive provisions of SEA Rule 15c3–3(k)(2)(i), either clears customer transactions pursuant to such exemptive provisions or holds customer funds in a bank account established thereunder.

[8] 15 U.S.C. 78*o*–3(b)(6).

[9] 15 U.S.C. 78s(b)(3)(A).

[10] 17 CFR 240.19b–4(f)(6).

[11] 17 CFR 240.19b–4(f)(6). In addition, Rule 19b–4(f)(6)(iii) requires that a self-regulatory organization submit to the Commission written notice of its intent to file the proposed rule change,

Continued

designate a shorter time if such action is consistent with the protection of investors and the public interest. As noted above, the Commission approved FINRA 4110 as part of a new, consolidated set of financial responsibility rules, which, among other things, regulates withdrawals of equity capital.[12] FINRA has requested that the Commission waive the 30-day operative delay set forth in Rule 19b–4(f)(6)(iii) under the Act[13] in order for the rule to become operative upon filing. The Commission notes that the proposed rule changes render the above-mentioned Incorporated NYSE rule provisions obsolete. The Commission further notes that the operative date of FINRA 4110 was February 8, 2009.[14] The Commission believes that the earlier operative date is consistent with the protection of investors and the public interest because it permits FINRA to implement the rule without further delay and in recognition of the operative date of the financial responsibility rules was February 8, 2010.[15]

At any time within 60 days of the filing of the proposed rule change, the Commission may summarily abrogate such rule change if it appears to the Commission that such action is necessary or appropriate in the public interest, for the protection of investors, or otherwise in furtherance of the purposes of the Act.

IV. Solicitation of Comments

Interested persons are invited to submit written data, views and arguments concerning the foregoing, including whether the proposed rule change is consistent with the Act. Comments may be submitted by any of the following methods:

Electronic Comments

- Use the Commission's Internet comment form (*http://www.sec.gov/rules/sro.shtml*); or
- Send an e-mail to *rule-comments@sec.gov*. Please include File Number SR–FINRA–2010–008 on the subject line.

Paper Comments

- Send paper comments in triplicate Elizabeth M. Murphy, Secretary, Securities and Exchange Commission, 100 F Street, NE., Washington, DC 20549–1090.

All submissions should refer to File Number SR–FINRA–2010–008. This file number should be included on the subject line if e-mail is used. To help the Commission process and review your comments more efficiently, please use only one method. The Commission will post all comments on the Commission's Internet Web site (*http://www.sec.gov/rules/sro.shtml*). Copies of the submission, all subsequent amendments, all written statements with respect to the proposed rule change that are filed with the Commission, and all written communications relating to the proposed rule change between the Commission and any person, other than those that may be withheld from the public in accordance with the provisions of 5 U.S.C. 552, will be available for Web site viewing and printing in the Commission's Public Reference Room, 100 F Street, NE., Washington, DC 20549, on official business days between the hours of 10 a.m. and 3 p.m. Copies of such filing also will be available for inspection and copying at the principal office of FINRA. All comments received will be posted without change; the Commission does not edit personal identifying information from submissions. You should submit only information that you wish to make available publicly. All submissions should refer to File Number SR–FINRA–2010–008 and should be submitted on or before March 12, 2010.

For the Commission, by the Division of Trading and Markets, pursuant to delegated authority.[16]

Florence E. Harmon,

Deputy Secretary.

[FR Doc. 2010–3230 Filed 2–18–10; 8:45 am]

BILLING CODE 8011–01–P

along with a brief description and text of the proposed rule change, at least five business days prior to the date of filing of the proposed rule change, or such shorter time as designated by the Commission. The Commission notes that FINRA has satisfied the five-day pre-filing notice requirement.

[12] *See* notes 4 and 5.

[13] 17 CFR 240.19b–4(f)(6)(iii).

[14] *See* FINRA Regulatory Notice 09–71 (December 2009).

[15] For purposes only of waiving the 30-day operative delay of this proposal, the Commission has considered the proposed rule's impact on efficiency, competition, and capital formation. 15 U.S.C. 78c(f).

[16] 17 CFR 200.30–3(a)(12).

SECURITIES AND EXCHANGE COMMISSION

[Release No. 34–61509; File No. SR–Phlx-2010–15]

Self-Regulatory Organizations; NASDAQ OMX PHLX, Inc.; Notice of Filing and Immediate Effectiveness of Proposed Rule Change Relating to Routing Fees

February 5, 2010.

Pursuant to Section 19(b)(1) of the Securities Exchange Act of 1934 ("Act")[1], and Rule 19b–4 thereunder,[2] notice is hereby given that on January 26, 2010, NASDAQ OMX PHLX, Inc. ("Phlx" or "Exchange") filed with the Securities and Exchange Commission ("SEC" or "Commission") the proposed rule change as described in Items I, II, and III, below, which Items have been substantially prepared by the Exchange. The Commission is publishing this notice to solicit comments on the proposed rule change from interested persons.

I. Self-Regulatory Organization's Statement of the Terms of Substance of the Proposed Rule Change

The Exchange proposes to adopt fees governing pricing for Exchange members using the Phlx XL II system,[3] for routing standardized equity and index options to away markets for execution.

While changes to the Exchange's Fee Schedule pursuant to this proposal are effective upon filing, the Exchange has designated this proposal to be operative for trades settling on or after February 1, 2010.

The text of the proposed rule change is available on the Exchange's Web site at *http://nasdaqtrader.com/micro.aspx?id=PHLXfilings,* on the Commission's Web site at *http://www.sec.gov*, at the principal office of the Exchange, and at the Commission's Public Reference Room.

II. Self-Regulatory Organization's Statement of the Purpose of, and Statutory Basis for, the Proposed Rule Change

In its filing with the Commission, the Exchange included statements concerning the purpose of and basis for the proposed rule change and discussed any comments it received on the

[1] 15 U.S.C. 78s(b)(1).

[2] 17 CFR 240.19b–4.

[3] For a complete description of Phlx XL II, *see* Securities Exchange Act Release No. 59995 (May 28, 2009), 74 FR 26750 (June 3, 2009) (SR–Phlx–2009–32). The instant proposed fees will apply only to options entered into, and routed by, the Phlx XL II system.

proposed rule change. The text of these statements may be examined at the places specified in Item IV below. The Exchange has prepared summaries, set forth in sections A, B, and C below, of the most significant aspects of such statements.

A. Self-Regulatory Organization's Statement of the Purpose of, and Statutory Basis for, the Proposed Rule Change

1. Purpose

The purpose of the proposed rule change is to recoup costs that the Exchange incurs for routing and executing orders in equity and index options to certain better-priced away markets.

In May, 2009, the Exchange adopted Rule 1080(m)(iii)(A) to establish Nasdaq Options Services LLC ("NOS"), a member of the Exchange, as the Exchange's exclusive order router.[4] NOS is utilized by the Phlx XL II system solely to route orders in options listed and open for trading on the Phlx XL II system to destination markets.

Currently, the Exchange's Fee Schedule includes a Routing Fee of $0.50 per contract side for orders routed to NYSE Arca, Inc. ("NYSEArca") in penny options for execution.[5] The Exchange proposes adding a Routing Fee of $0.40 per contract side for orders routed to the NASDAQ Options Market ("NOM") in penny options for execution.[6] There will be no routing fees for orders routed to away markets other than NYSEArca and NOM in penny options. Also, there will be no cost for executing orders at away markets in non-penny classes.

The Exchange incurs a cost of routing penny options to NOM and proposes this fee to recover the costs of routing to that exchange. Accordingly, the Exchange is proposing this fee to recoup transaction and clearing costs. The Exchange believes that the routing fees proposed will enable the Exchange to recover these costs.

2. Statutory Basis

The Exchange believes that its proposal to amend its schedule of fees is consistent with Section 6(b) of the Act[7] in general, and furthers the objectives of Section 6(b)(4) of the Act[8] in particular, in that it is an equitable allocation of reasonable fees and other charges among Exchange members because all members and member organizations would be assessed the same fee for penny options routed to and executed on NOM. The Exchange believes that this fee would enable it to recoup costs associated with routing customer orders on behalf of its members.

B. Self-Regulatory Organization's Statement on Burden on Competition

The Exchange does not believe that the proposed rule change will impose any burden on competition not necessary or appropriate in furtherance of the purposes of the Act.

C. Self-Regulatory Organization's Statement on Comments on the Proposed Rule Change Received From Members, Participants, or Others

No written comments were either solicited or received.

III. Date of Effectiveness of the Proposed Rule Change and Timing for Commission Action

The foregoing rule change has become effective pursuant to Section 19(b)(3)(A)(ii) of the Act[9] and paragraph (f)(2) of Rule 19b–4[10] thereunder. At any time within 60 days of the filing of the proposed rule change, the Commission may summarily abrogate such rule change if it appears to the Commission that such action is necessary or appropriate in the public interest, for the protection of investors, or otherwise in furtherance of the purposes of the Act.

IV. Solicitation of Comments

Interested persons are invited to submit written data, views, and arguments concerning the foregoing, including whether the proposed rule change is consistent with the Act. Comments may be submitted by any of the following methods:

Electronic Comments

- Use the Commission's Internet comment form (*http://www.sec.gov/rules/sro.shtml);* or
- Send an e-mail to *rule-comments@sec.gov.* Please include File Number SR–Phlx–2010–15 on the subject line.

Paper Comments

- Send paper comments in triplicate to Elizabeth M. Murphy, Secretary, Securities and Exchange Commission, 100 F Street, NE., Washington, DC 20549–1090.

All submissions should refer to File Number SR–Phlx–2010–15. This file number should be included on the subject line if e-mail is used. To help the Commission process and review your comments more efficiently, please use only one method. The Commission will post all comments on the Commission's Internet Web site (*http://www.sec.gov/rules/sro.shtml*). Copies of the submission, all subsequent amendments, all written statements with respect to the proposed rule change that are filed with the Commission, and all written communications relating to the proposed rule change between the Commission and any person, other than those that may be withheld from the public in accordance with the provisions of 5 U.S.C. 552, will be available for Web site viewing and printing in the Commission's Public Reference Room, 100 F Street, NE., Washington, DC 20549, on official business days between the hours of 10 a.m. and 3 p.m. Copies of such filing also will be available for inspection and copying at the principal office of the Exchange. All comments received will be posted without change; the Commission does not edit personal identifying information from submissions. You should submit only information that you wish to make available publicly. All submissions should refer to File Number SR–Phlx–2010–15 and should be submitted on or before March 12, 2010.

For the Commission, by the Division of Trading and Markets, pursuant to delegated authority.[11]

Florence E. Harmon,

Deputy Secretary.

[FR Doc. 2010–3159 Filed 2–18–10; 8:45 am]

BILLING CODE 8011–01–P

[4] *See* Securities Exchange Act Release No. 59995 (May 28, 2009), 74 FR 26750 (June 3, 2009) (SR–Phlx–2009–32).

[5] *See* Securities Exchange Act Release No. 61374 (January 19, 2010), 75 FR 4123 (January 26, 2010) (SR–PHLX–2010–01).

[6] The Exchange clarified that NOM charges a $0.35 transaction charge to NOS and the Options Clearing Corporation charges a $0.06 clearing charge, for a total fee of $0.41 for transactions routed to NOM. The Exchange proposed the $0.40 fee to recoup these costs. *See* E-mail from Angela S. Dunn, Assistant General Counsel, Phlx, to Johnna B. Dumler, Special Counsel, Division of Trading and Markets, Commission, dated January 29, 2010.

[7] 15 U.S.C. 78f(b).

[8] 15 U.S.C. 78f(b)(4).

[9] 15 U.S.C. 78s(b)(3)(A)(ii).

[10] 17 CFR 240.19b–4(f)(2).

[11] 17 CFR 200.30–3(a)(12).

DEPARTMENT OF STATE

[Public Notice 6899]

Culturally Significant Objects Imported for Exhibition Determinations: "The Aztec Pantheon and the Art Empire"

SUMMARY: Notice is hereby given of the following determinations: Pursuant to the authority vested in me by the Act of October 19, 1965 (79 Stat. 985; 22 U.S.C. 2459), Executive Order 12047 of March 27, 1978, the Foreign Affairs Reform and Restructuring Act of 1998 (112 Stat. 2681, *et seq.;* 22 U.S.C. 6501 note, *et seq.*), Delegation of Authority No. 234 of October 1, 1999, Delegation of Authority No. 236 of October 19, 1999, as amended, and Delegation of Authority No. 257 of April 15, 2003 [68 FR 19875], I hereby determine that the objects to be included in the exhibition "The Aztec Pantheon and the Art Empire," imported from abroad for temporary exhibition within the United States, are of cultural significance. The objects are imported pursuant to loan agreements with the foreign owners or custodians. I also determine that the exhibition or display of the exhibit objects at the Getty Villa, Pacific Palisades, CA, from on or about March 24, 2010, until on or about July 5, 2010, and at possible additional exhibitions or venues yet to be determined, is in the national interest. I have ordered that Public Notice of these Determinations be published in the **Federal Register.**

FOR FURTHER INFORMATION CONTACT: For further information, including a list of the exhibit objects, contact Julie Simpson, Attorney-Adviser, Office of the Legal Adviser, U.S. Department of State (*telephone:* 202–632–6467). The mailing address is U.S. Department of State, SA–5, L/PD, Fifth Floor (Suite 5H03), Washington, DC 20522–0505.

Dated: February 12, 2010.

Maura M. Pally,

Deputy Assistant Secretary for Professional and Cultural Exchanges, Bureau of Educational and Cultural Affairs, Department of State.

[FR Doc. 2010–3255 Filed 2–18–10; 8:45 am]

BILLING CODE 4710–05–P

DEPARTMENT OF STATE

[Public Notice 6897]

Culturally Significant Objects Imported for Exhibition Determinations: "Hendrick Avercamp (1585–1634): The Little Ice Age"

SUMMARY: Notice is hereby given of the following determinations: Pursuant to the authority vested in me by the Act of October 19, 1965 (79 Stat. 985; 22 U.S.C. 2459), Executive Order 12047 of March 27, 1978, the Foreign Affairs Reform and Restructuring Act of 1998 (112 Stat. 2681, *et seq.;* 22 U.S.C. 6501 note, *et seq.*), Delegation of Authority No. 234 of October 1, 1999, Delegation of Authority No. 236 of October 19, 1999, as amended, and Delegation of Authority No. 257 of April 15, 2003 [68 FR 19875], I hereby determine that the objects to be included in the exhibition "Hendrick Avercamp (1585–1634): The Little Ice Age," imported from abroad for temporary exhibition within the United States, are of cultural significance. The objects are imported pursuant to loan agreements with the foreign owners or custodians. I also determine that the exhibition or display of the exhibit objects at the National Gallery of Art, Washington, DC, from on or about March 21, 2010, until on or about July 5, 2010, and at possible additional exhibitions or venues yet to be determined, is in the national interest. I have ordered that Public Notice of these Determinations be published in the **Federal Register.**

FOR FURTHER INFORMATION CONTACT: For further information, including a list of the exhibit objects, contact Julie Simpson, Attorney-Adviser, Office of the Legal Adviser, U.S. Department of State (*telephone:* 202–632–6467). The mailing address is U.S. Department of State, SA–5, L/PD, Fifth Floor (Suite 5H03), Washington, DC 20522–0505.

Dated: February 12, 2010.

Maura M. Pally,

Deputy Assistant Secretary for Professional and Cultural Exchanges, Bureau of Educational and Cultural Affairs, Department of State.

[FR Doc. 2010–3256 Filed 2–18–10; 8:45 am]

BILLING CODE 4710–05–P

DEPARTMENT OF STATE

[Public Notice 6898]

Culturally Significant Objects Imported for Exhibition Determinations: "The Dead Sea Scrolls: Words That Changed the World"

SUMMARY: Notice is hereby given of the following determinations: Pursuant to the authority vested in me by the Act of October 19, 1965 (79 Stat. 985; 22 U.S.C. 2459), Executive Order 12047 of March 27, 1978, the Foreign Affairs Reform and Restructuring Act of 1998 (112 Stat. 2681, *et seq.;* 22 U.S.C. 6501 note, *et seq.*), Delegation of Authority No. 234 of October 1, 1999, Delegation of Authority No. 236 of October 19, 1999, as amended, and Delegation of Authority No. 257 of April 15, 2003 [68 FR 19875], I hereby determine that the objects to be included in the exhibition "The Dead Sea Scrolls: Words That Changed the World," imported from abroad for temporary exhibition within the United States, are of cultural significance. The objects are imported pursuant to a loan agreement with the foreign owner or custodian. I also determine that the exhibition or display of the exhibit objects at the Science Museum of Minnesota, St. Paul, MN, from on or about March 12, 2010, until on or about October 24, 2010, and at possible additional exhibitions or venues yet to be determined, is in the national interest. I have ordered that Public Notice of these Determinations be published in the **Federal Register.**

FOR FURTHER INFORMATION CONTACT: For further information, including a list of the exhibit objects, contact Julie Simpson, Attorney-Adviser, Office of the Legal Adviser, U.S. Department of State (*telephone:* 202–632–6467). The mailing address is U.S. Department of State, SA–5, L/PD, Fifth Floor (Suite 5H03), Washington, DC 0522–0505.

Dated: February 12, 2010.

Maura M. Pally,

Deputy Assistant Secretary for Professional and Cultural Exchanges, Bureau of Educational and Cultural Affairs, Department of State.

[FR Doc. 2010–3257 Filed 2–18–10; 8:45 am]

BILLING CODE 4710–05–P

DEPARTMENT OF TRANSPORTATION

Federal Highway Administration

Environmental Impact Statement: Ottawa County, MI

AGENCY: Federal Highway Administration (FHWA), U.S. DOT.

ACTION: Notice of Availability (NOA) of the Final Environmental Impact Statement (FEIS) for the US–31 Holland to Grand Haven Project.

SUMMARY: This notice announces the availability of the Final Environmental Impact Statement (FEIS) for the US–31 Holland to Grand Haven Project. This action is pursuant to the National Environmental Policy Act (NEPA) of 1969, 42 U.S.C. 4321 *et seq,* as amended and the Council on Environmental Quality Regulations (40 CFR Parts 1500–1508). The FEIS identifies the Preferred Alternative which proposes improvements to US–31 from East Lakewood Boulevard north to Quincy Street, in Holland; and from south of Franklin Street north to north of Jackson Street in Grand Haven. The new M–231

route would be constructed west of 120th Avenue, from M–45 (Lake Michigan Drive) north to the I–96/M–104 interchange, including a new crossing of the Grand River; improvements to M–104, near I–96; new ramps at the I–96/M–231 interchange; and improvements to the I–96/112th Avenue interchange.

The project is located in Ottawa County, Michigan. The FEIS summarizes the planning basis, the process used to determine the Preferred Alternative and associated impacts, describes the anticipated environmental impacts and proposed mitigation, and addresses comments received on the Draft Environmental Impact Statement.

DATES: Any comments should be received on or before March 22, 2010. The FEIS is available for public review during a 30-day waiting period per 23 CFR 771.127. To ensure your comments are considered, submit your comments on or before March 22, 2010. FHWA cannot issue the Record of Decision (ROD) any sooner than 30 days after publication of the final EIS notice in the **Federal Register** (currently scheduled to be published on February 19, 2010). The ROD will present the basis for the decision as specified in 40 CFR 1505.2, and summarize any mitigation measures that will be incorporated in the project. Substantive comments received by March 22nd that address new concerns or fatal flaws in the FEIS's analysis will be responded to in the ROD.

ADDRESSES: 1. *Document Availability:* Copies of the FEIS are available for public inspection and review at the following locations:

- Fruitport Branch Library, 47 West Park St., Fruitport.
- Herrick Public Library, 300 S. River Ave., Holland.
- Howard Miller Public Library, 14 S. Church St., Zeeland.
- Loutit Library, 407 Columbus St., Grand Haven.
- Norton Shores Branch Library, 705 Seminole Rd., Norton Shores.
- Warner Baird District Library, 123 Exchange St., Spring Lake.
- Robinson Township Hall, 12010 120th Ave., Grand Haven.
- Crockery Township, 17431 112th Ave., Nunica.
- Holland Township, 353 N. 120th Ave., Holland.
- City of Holland, 270 S. River Ave., Holland.
- City of Grand Haven, 519 Washington Ave., Grand Haven.
- Grand Haven Township, 13300 168th Ave., Grand Haven.
- Macatawa Area Coordinating Council, 301 Douglas Ave., Holland.
- Ottawa County Planning & Grants Office, 12220 Fillmore St., Rm. 170, West Olive.
- MDOT Grand Region Office, 1420 Front St., Grand Rapids.
- MDOT Muskegon Transportation Service Center, 2225 Olthoff Dr., Muskegon.
- MDOT Grand Rapids Transportation Service Center, 2060 Leonard St., N.E., Grand Rapids.
- MDOT Bureau of Transportation Planning, 425 W. Ottawa St., Lansing.

The document also may be viewed and commented on at: *http://www.michigan.gov/mdotstudies*.

Copies of the FEIS may be requested from Bob Parsons (Public Involvement and Hearings Officer) at the Michigan Department of Transportation, 425 W. Ottawa Street, P.O. Box 30050, Lansing, MI 48909 or by calling (517) 373–9534.

2. *Comments:* Send any comments on the FEIS to the Michigan Department of Transportation, c/o Bob Parsons (Public Involvement and Hearings Officer), 425 W. Ottawa Street, P.O. Box 30050, Lansing, MI 48909; Fax: (517) 373–9255; or e-mail: *parsonsb@michigan.gov*. Information regarding this proposed action is available in alternative formats upon request.

FOR FURTHER INFORMATION CONTACT: Ruth Hepfer, Area Engineer at FHWA Michigan Division, 315 W. Allegan Street, Room 201; Lansing, MI 48933; by phone at (517) 702–1847, or email at *Ruth.Hepfer@dot.gov*.

David Williams, Environmental Program Manager, FHWA Michigan Division, 315 W. Allegan Street, Room 201; Lansing, MI 48933; by phone at (517) 702–1820; or email at *David.Williams@dot.gov*.

SUPPLEMENTARY INFORMATION: The DEIS for the US–31 Holland to Grand Haven Project was approved in November 1998. Since more than 11 years has passed since the signing of the DEIS, a re-evaluation of the DEIS was done in accordance with 23 CFR 771.129, and is included in the FEIS. This FEIS reflects the comments received during the public hearing process and updated data in all critical areas.

Authority: 42 U.S.C. 4321 *et seq,* as amended and the Council on Environmental Quality Regulations (40 CFR Parts 1500–1508)23 CFR 771.117; and 23 U.S.C. 139(1)(1)

Issued on: February 10, 2010.

James J. Steele,

Division Administrator, Lansing, Michigan.

[FR Doc. 2010–3110 Filed 2–18–10; 8:45 am]

BILLING CODE 4910–22–P

DEPARTMENT OF TRANSPORTATION

Surface Transportation Board

[STB Finance Docket No. 35347]

Elkhart & Western Railroad Co.—Lease and Operation Exemption—Norfolk Southern Railway Company

Elkhart & Western Railroad Co. (EWR), a Class III rail carrier,[1] has filed a verified notice of exemption under 49 CFR 1150.41 to lease and to operate, pursuant to a lease agreement (Agreement)[2] with Norfolk Southern Railway Company (NSR), approximately 23.0 miles of NSR's rail line generally referred to as a portion of the Michigan City Branch (MCB) extending between milepost I 108.6+/− at Argos, IN (including track extending from the clearance point of the east switch of the track connecting the MCB to NSR's Argos Yard, continuing to the end of the right-of-way at Argos), and milepost I 131.6+/− at Walkerton, IN, but excluding the trackage and diamonds between the northbound and southbound home signals at CP West Argos (which trackage NSR will retain to protect the crossing of NSR's Chicago District).

EWR states that it will interchange traffic with NSR at a track in the vicinity of Argos Yard. EWR also states that it does not believe that the Agreement contains an interchange commitment that would impede EWR's ability to interchange with third party carriers. *See* 49 CFR 1150.43(h). According to EWR, the Agreement does contain a standard rental credit provision, which EWR sought in negotiations to afford it greater financial flexibility to, among other things, improve the line's infrastructure. To ensure adherence to 49 CFR 1150.43(h) for transactions involving interchange commitments, EWR concurrently has filed with its notice a complete version of the Agreement, marked "highly confidential" and submitted under seal pursuant to 49 CFR 1104.14(a).

EWR certifies that its projected annual revenues as a result of the transaction will not result in it becoming a Class II or Class I rail carrier and further certifies that its projected annual revenues will not exceed $5 million.

The transaction is scheduled to be consummated on or after March 6, 2010, the effective date of the exemption (30 days after the exemption was filed).

[1] *See Pioneer Railcorp and Michigan Southern Railroad Company—Corporate Family Transaction Exemption,* STB Finance Docket No. 33941 (STB served Oct. 10, 2000).

[2] EWR states that it has executed the Agreement, and that NSR will shortly execute the Agreement.

If the verified notice contains false or misleading information, the exemption is void *ab initio.* Petitions to revoke the exemption under 49 U.S.C. 10502(d) may be filed at any time. The filing of a petition to revoke will not automatically stay the effectiveness of the exemption. Petitions for stay must be filed no later than February 26, 2010 (at least 7 days before the exemption becomes effective).

An original and 10 copies of all pleadings, referring to STB Finance Docket No. 35347, must be filed with the Surface Transportation Board, 395 E Street, SW., Washington, DC 20423–0001. In addition, a copy of each pleading must be served on Robert A. Wimbish, Baker & Miller, PLLC, 2401 Pennsylvania Ave., NW., Suite 300, Washington, DC 20037.

Board decisions and notices are available on our Web site at *www.stb.dot.gov.*

Decided: February 16, 2010.

By the Board, Rachel D. Campbell, Director, Office of Proceedings.

Jeffrey Herzig,

Clearance Clerk.

[FR Doc. 2010–3229 Filed 2–18–10; 8:45 am]

BILLING CODE 4915–01–P

DEPARTMENT OF THE TREASURY

Community Development Financial Institutions Fund

Proposed Collection; Comment Request

ACTION: Notice and request for comments.

SUMMARY: The U.S. Department of the Treasury, as part of its continuing effort to reduce paperwork and respondent burden, invites the general public and other Federal agencies to take this opportunity to comment on proposed and/or continuing information collections, as required by the Paperwork Reduction Act of 1995, Public Law No. 104–13 (44 U.S.C. 3506(c)(2)(A)). Currently, the Community Development Financial Institutions Fund (the "Fund"), an office within the Department of the Treasury, is soliciting comments concerning the CDFI Fund's Quarterly New Markets Report (QNMR) for New Markets Tax Credit (NMTC) allocatees under the American Recovery and Reinvestment Act of 2009 (Recovery Act).

DATES: Written comments should be received on or before April 20, 2010 to be assured of consideration.

ADDRESSES: Direct all comments to Charles McGee, Program Manager, Certification, Compliance Monitoring and Evaluation at the Community Development Financial Institutions Fund, U.S. Department of the Treasury, 601 13th Street, NW., Suite 200 South, Washington, DC 20005, by e-mail to *cdfihelp@cdfi.treas.gov* or by facsimile to (202) 622–7754. Please note this is not a toll free number.

FOR FURTHER INFORMATION CONTACT: The CDFI Fund's QNMR may be obtained from the Recovery Act page of the CDFI Fund's Web site at *http://www.cdfifund.gov*. Requests for additional information should be directed to Charles McGee, Program Manager, Certification, Compliance Monitoring and Evaluation, Community Development Financial Institutions Fund, U.S. Department of the Treasury, 601 13th Street, NW., Suite 200 South, Washington, DC 20005, or call (202) 622–7373. Please note this is not a toll free number.

SUPPLEMENTARY INFORMATION:

Title: Quarterly New Markets Report.

OMB Number: 1559–0035.

Abstract: The NMTC Program was authorized under the Community Renewal Tax Relief Act of 2000 and is administered by the Department of the Treasury's Community Development Financial Institutions (CDFI) Fund. The NMTC Program facilitates investment in low-income communities by permitting taxpayers to receive a credit against Federal income taxes for making Qualified Equity Investments (QEIs) in designated Treasury-certified Community Development Entities (CDEs). The CDEs must, in turn, use substantially all of these QEI proceeds to make loans and investments in businesses and real estate developments in low-income communities.

The Recovery Act provided $3 billion of tax credit allocation authority through the NMTC Program. Of this amount, $1.5 billion was made available to thirty-two CDEs through the FY 2008 NMTC allocation round and the remaining $1.5 billion was made available to twenty-four CDEs through the FY 2009 NMTC allocation round. In order to ensure that the accountability and transparency requirements of the Recovery Act are being met, NMTC allocatees that are recipients of an allocation authority under the Recovery Act are required to report to the CDFI Fund on a quarterly basis. NMTC allocatees must complete and submit a QNMR to the CDFI Fund no later than 10 days after the end of each calendar quarter. The questions included in the QNMR allow the CDFI Fund to evaluate the effectiveness and impact of the NMTC Program. More specifically, the information reported in the QNMR will enable the CDFI Fund to identify how Recovery Act allocatees are putting their NMTC investments to use in low-income communities and will help the CDFI Fund to meet its own Recovery Act agency reporting requirements. The QNMR also provides qualitative and quantitative information on the allocatee's compliance with its performance goals as outlined in its allocation agreement with the CDFI Fund. Failure to obtain the information collected in the QNMR could result in improper monitoring of the uses of Federal funds.

Current Actions: Extension of a currently approved collection.

Type of Review: Regular Review.

Affected Public: New Markets Tax Credit allocatees that are recipients of an allocation authority under the Recovery Act.

Estimated Number of Respondents: 56.

Estimated Annual Time per Respondent: 17.14 hours.

Estimated Total Annual Burden Hours: 960 hours.

Requests for Comments: Comments submitted in response to this notice will be summarized and/or included in the request for Office of Management and Budget approval. All comments will become a matter of public record and may be published on the CDFI Fund Web site at *http://www.cdfifund.gov*. Comments are invited on: (a) Whether the collection of information is necessary for the proper performance of the functions of the CDFI Fund, including whether the information shall have practical utility; (b) the accuracy of the CDFI Fund's estimate of the burden of the collection of information; (c) ways to enhance the quality, utility, and clarity of the information to be collected; (d) ways to minimize the burden of the collection of information on respondents, including through the use of technology.

Authority: 12 U.S.C. 1834a, 4703, 4703 note, 4713, 4717; 31 U.S.C. 321; 12 CFR part 1806; Public Law 111–5.

Dated: February 4, 2010.

Donna J. Gambrell,

Director, Community Development Financial Institutions Fund.

[FR Doc. 2010–3165 Filed 2–18–10; 8:45 am]

BILLING CODE 4810–70–P

DEPARTMENT OF THE TREASURY

Internal Revenue Service

Open Meeting of the Area 4 Taxpayer Advocacy Panel (Including the States of Illinois, Indiana, Kentucky, Michigan, Ohio, Tennessee, and Wisconsin)

AGENCY: Internal Revenue Service (IRS), Treasury.

ACTION: Notice of meeting.

SUMMARY: An open meeting of the Area 4 Taxpayer Advocacy Panel will be conducted. The Taxpayer Advocacy Panel is soliciting public comments, ideas, and suggestions on improving customer service at the Internal Revenue Service.

DATES: The meeting will be held Tuesday, March 16, 2010.

FOR FURTHER INFORMATION CONTACT: Ellen Smiley at 1–888–912–1227 or 414–231–2360.

SUPPLEMENTARY INFORMATION: Notice is hereby given pursuant to Section 10(a)(2) of the Federal Advisory Committee Act, 5 U.S.C. App. (1988) that a meeting of the Area 4 Taxpayer Advocacy Panel will be held Tuesday, March 16, 2010, at 1 p.m. Central Time via telephone conference. The public is invited to make oral comments or submit written statements for consideration. Due to limited conference lines, notification of intent to participate must be made with Ellen Smiley. For more information please contact Ms. Smiley at 1–888–912–1227 or 414–231–2360, or write TAP Office Stop 1006MIL, 211 West Wisconsin Avenue, Milwaukee, WI 53203–2221, or post comments to the Web site: *http://www.improveirs.org.*

The agenda will include various IRS issues.

Dated: February 4, 2010.

Shawn F. Collins,

Acting Director, Taxpayer Advocacy Panel.

[FR Doc. 2010–3175 Filed 2–18–10; 8:45 am]

BILLING CODE 4830–01–P

DEPARTMENT OF THE TREASURY

Internal Revenue Service

Open Meeting of the Area 5 Taxpayer Advocacy Panel (Including the States of Iowa, Kansas, Minnesota, Missouri, Nebraska, Oklahoma, and Texas)

AGENCY: Internal Revenue Service (IRS), Treasury.

ACTION: Notice of meeting.

SUMMARY: An open meeting of the Area 5 Taxpayer Advocacy Panel will be conducted. The Taxpayer Advocacy Panel is soliciting public comments, ideas, and suggestions on improving customer service at the Internal Revenue Service.

DATES: The meeting will be held Tuesday, March 9, 2010.

FOR FURTHER INFORMATION CONTACT: Patricia Robb at 1–888–912–1227 or 414–231–2360.

SUPPLEMENTARY INFORMATION: Notice is hereby given pursuant to Section 10(a)(2) of the Federal Advisory Committee Act, 5 U.S.C. App. (1988) that a meeting of the Area 5 Taxpayer Advocacy Panel will be held Tuesday, March 9, 2010, at 11 a.m. Central Time via telephone conference. The public is invited to make oral comments or submit written statements for consideration. Due to limited conference lines, notification of intent to participate must be made with Patricia Robb. For more information please contact Ms. Robb at 1–888–912–1227 or 414–231–2360, or write TAP Office Stop 1006MIL, 211 West Wisconsin Avenue, Milwaukee, WI 53203–2221, or post comments to the Web site: *http://www.improveirs.org.*

The agenda will include various IRS issues.

Reason for Late Notice: Due to inclement weather and Federal office closings in the District of Columbia, key TAP staff was unavailable to prepare and submit notice in time to meet the 15-day notice requirement. Scheduling conflicts with other meetings prevent rescheduling this meeting.

Dated: February 4, 2010.

Linda Rivera,

Senior Program Analyst, Taxpayer Advocacy Panel.

[FR Doc. 2010–3184 Filed 2–18–10; 8:45 am]

BILLING CODE 4830–01–P

DEPARTMENT OF THE TREASURY

Internal Revenue Service

Open Meeting of the Taxpayer Advocacy Panel Small Business/Self Employed Project Committee

AGENCY: Internal Revenue Service (IRS) Treasury.

ACTION: Notice of meeting.

SUMMARY: An open meeting of the Taxpayer Advocacy Panel Small Business/Self Employed Project Committee will be conducted. The Taxpayer Advocacy Panel is soliciting public comments, ideas, and suggestions on improving customer service at the Internal Revenue Service.

DATES: The meeting will be held Thursday, March 25, 2010.

FOR FURTHER INFORMATION CONTACT: Janice Spinks at 1–888–912–1227 or 206–220–6098.

SUPPLEMENTARY INFORMATION: Notice is hereby given pursuant to Section 10(a)(2) of the Federal Advisory Committee Act, 5 U.S.C. App. (1988) that an open meeting of the Taxpayer Advocacy Panel Small Business/Self Employed Project Committee will be held Thursday, March 25, 2010, at 9:00 a.m. Pacific Time via telephone conference. The public is invited to make oral comments or submit written statements for consideration. Due to limited conference lines, notification of intent to participate must be made with Janice Spinks. For more information please contact Ms. Spinks at 1–888–912–1227 or 206–220–6098, or write TAP Office, 915 2nd Avenue, MS W–406, Seattle, WA 98174 or post comments to the Web site: *http://www.improveirs.org.*

The agenda will include various IRS issues.

Dated: *February 4, 2010.*

Shawn F. Collins,

Acting Director, Taxpayer Advocacy Panel.

[FR Doc. 2010–3172 Filed 2–18–10; 8:45 am]

BILLING CODE 4830–01–P

DEPARTMENT OF THE TREASURY

Internal Revenue Service

Open Meeting of the Taxpayer Advocacy Panel Taxpayer Assistance Center Committee

AGENCY: Internal Revenue Service (IRS), Treasury.

ACTION: Notice of meeting.

SUMMARY: An open meeting of the Taxpayer Advocacy Panel Taxpayer Assistance Center Committee will be conducted. The Taxpayer Advocacy Panel is soliciting public comments, ideas, and suggestions on improving customer service at the Internal Revenue Service.

DATES: The meeting will be held Tuesday, March 23, 2010.

FOR FURTHER INFORMATION CONTACT: Ellen Smiley at 1–888–912–1227 or 414–231–2360.

SUPPLEMENTARY INFORMATION: Notice is hereby given pursuant to Section 10(a)(2) of the Federal Advisory Committee Act, 5 U.S.C. App. (1988) that an open meeting of the Taxpayer Advocacy Panel Taxpayer Assistance Center Committee will be held Tuesday, March 23, 2010, at 1 p.m. Central Time

via telephone conference. The public is invited to make oral comments or submit written statements for consideration. Due to limited conference lines, notification of intent to participate must be made with Ellen Smiley. For more information please contact Ms. Smiley at 1–888–912–1227 or 414–231–2360, or write TAP Office Stop 1006MIL, 211 West Wisconsin Avenue, Milwaukee, WI 53203–2221, or post comments to the Web site: *http://www.improveirs.org.*

The agenda will include various IRS issues.

Dated: February 4, 2010.

Shawn F. Collins,

Acting Director, Taxpayer Advocacy Panel.

[FR Doc. 2010–3174 Filed 2–18–10; 8:45 am]

BILLING CODE 4830–01–P

DEPARTMENT OF THE TREASURY

Internal Revenue Service

Open Meeting of the Taxpayer Advocacy Panel Earned Income Tax Credit Project Committee

AGENCY: Internal Revenue Service (IRS), Treasury.

ACTION: Notice of meeting.

SUMMARY: An open meeting of the Taxpayer Advocacy Panel Earned Income Tax Credit Project Committee will be conducted. The Taxpayer Advocacy Panel is soliciting public comments, ideas and suggestions on improving customer service at the Internal Revenue Service.

DATES: The meeting will be Wednesday, March 24, 2010.

FOR FURTHER INFORMATION CONTACT: Donna Powers at 1–888–912–1227 or 954–423–7977.

SUPPLEMENTARY INFORMATION: Notice is hereby given pursuant to Section 10(a)(2) of the Federal Advisory Committee Act, 5 U.S.C. App. (1988) that an open meeting of the Taxpayer Advocacy Panel Earned Income Tax Credit Project Committee will be held Wednesday, March 24, 2010, at 1 p.m. Eastern Time via telephone conference. The public is invited to make oral comments or submit written statements for consideration. Due to limited conference lines, notification of intent to participate must be made with Donna Powers. For more information please contact Ms. Powers at 1–888–912–1227 or 954–423–7977, or write TAP Office, 1000 South Pine Island Road, Suite 340, Plantation, FL 33324, or contact us at the Web site: *http://www.improveirs.org.*

The agenda will include various IRS issues.

Dated: February 4, 2010.

Shawn F. Collins,

Acting Director, Taxpayer Advocacy Panel.

[FR Doc. 2010–3177 Filed 2–18–10; 8:45 am]

BILLING CODE 4830–01–P

DEPARTMENT OF THE TREASURY

Internal Revenue Service

Open Meeting of Taxpayer Advocacy Panel Notice Improvement Project Committee

AGENCY: Internal Revenue Service (IRS), Treasury.

ACTION: Notice of meeting.

SUMMARY: An open meeting of the Taxpayer Advocacy Panel Notice Improvement Project Committee will be conducted. The Taxpayer Advocacy Panel is soliciting public comments, ideas and suggestions on improving customer service at the Internal Revenue Service.

DATES: The meeting will be held Wednesday, March 10, 2010.

FOR FURTHER INFORMATION CONTACT: Audrey Y. Jenkins at 1–888–912–1227 or 718–488–2085.

SUPPLEMENTARY INFORMATION: Notice is hereby given pursuant to section 10(a)(2) of the Federal Advisory Committee Act, 5 U.S.C. App. (1988) that an open meeting of the Taxpayer Advocacy Panel Notice Improvement Project Committee will be held Wednesday, March 10, 2010, at 2 p.m. Eastern Time via telephone conference. The public is invited to make oral comments or submit written statements for consideration. Due to limited conference lines, notification of intent to participate must be made with Audrey Y. Jenkins. For more information, please contact Ms. Jenkins at 1–888–912–1227 or 718–488–2085, or write TAP Office, 10 MetroTech Center, 625 Fulton Street, Brooklyn, NY 11201, or post comments to the Web site: *http://www.improveirs.org.*

The agenda will include various IRS issues.

Reason for Late Notice: Due to inclement weather and federal office closings in the District of Columbia, key TAP staff was unavailable to prepare and submit notice in time to meet the 15-day notice requirement. Scheduling conflicts with other meetings prevent rescheduling this meeting.

Dated: February 12, 2010.

Linda Rivera,

Senior Program Analyst, Taxpayer Advocacy Panel.

[FR Doc. 2010–3180 Filed 2–18–10; 8:45 am]

BILLING CODE 4830–01–P

DEPARTMENT OF THE TREASURY

Internal Revenue Service

Open Meeting of the Area 6 Taxpayer Advocacy Panel (Including the States of Arizona, Colorado, Idaho, Montana, New Mexico, North Dakota, Oregon, South Dakota, Utah, Washington, and Wyoming)

AGENCY: Internal Revenue Service (IRS) Treasury.

ACTION: Notice of meeting.

SUMMARY: An open meeting of the Area 6 Taxpayer Advocacy Panel will be conducted. The Taxpayer Advocacy Panel is soliciting public comment, ideas, and suggestions on improving customer service at the Internal Revenue Service.

DATES: The meeting will be held Tuesday, March 2, 2010.

FOR FURTHER INFORMATION CONTACT: Janice Spinks at 1–888–912–1227 or 206–220–6098.

SUPPLEMENTARY INFORMATION: Notice is hereby given pursuant to Section 10(a)(2) of the Federal Advisory Committee Act, 5 U.S.C. App. (1988) that an open meeting of the Area 6 Taxpayer Advocacy Panel will be held Tuesday, March 2, 2010, at 1 p.m. Pacific Time via telephone conference. The public is invited to make oral comments or submit written statements for consideration. Due to limited conference lines, notification of intent to participate must be made with Janice Spinks. For more information, please contact Ms. Spinks at 1–888–912–1227 or 206–220–6098, or write TAP Office, 915 2nd Avenue, MS W–406, Seattle, WA 98174 or post comments to the Web site: *http://www.improveirs.org.*

The agenda will include various IRS issues.

Dated: February 12, 2010.

Linda Rivera,

Senior Program Analyst, Taxpayer Advocacy Panel.

[FR Doc. 2010–3183 Filed 2–18–10; 8:45 am]

BILLING CODE 4830–01–P

DEPARTMENT OF THE TREASURY

Internal Revenue Service

Open Meeting of the Taxpayer Advocacy Panel Volunteer Income Tax Assistance Issue Committee

AGENCY: Internal Revenue Service (IRS), Treasury.

ACTION: Notice of meeting.

SUMMARY: An open meeting of the Taxpayer Advocacy Panel Volunteer

Income Tax Issue Committee will be conducted. The Taxpayer Advocacy Panel is soliciting public comment, ideas, and suggestions on improving customer service at the Internal Revenue Service.

DATES: The meeting will be held Tuesday, March 9, 2010.

FOR FURTHER INFORMATION CONTACT: Sallie Chavez at 1–888–912–1227 or 954–423–7979.

SUPPLEMENTARY INFORMATION: Notice is hereby given pursuant to Section 10(a)(2) of the Federal Advisory Committee Act, 5 U.S.C. App. (1988) that a meeting of the Taxpayer Advocacy Panel Volunteer Income Tax Issue Committee will be held Tuesday, March 9, 2010, at 2 p.m. Eastern Time via telephone conference. The public is invited to make oral comments or submit written statements for consideration. Due to limited conference lines, notification of intent to participate must be made with Sallie Chavez. For more information, please contact Ms. Chavez at 1–888–912–1227 or 954–423–7979, or write TAP Office, 1000 South Pine Island Road, Suite 340, Plantation, FL 33324, or contact us at the Web site: *http://www.improveirs.org.*

The agenda will include various IRS Issues.

Reason for Late Notice: Due to year-end leave and mandatory training in January, key TAP staff was unavailable to prepare and submit notice in time to meet the 15-day notice requirement. Scheduling conflicts with other meetings prevent rescheduling this meeting.

Dated: February 12, 2010.

Linda Rivera,

Senior Program Analyst, Taxpayer Advocacy Panel.

[FR Doc. 2010–3182 Filed 2–18–10; 8:45 am]

BILLING CODE 4830–01–P

DEPARTMENT OF THE TREASURY

Internal Revenue Service

Open Meeting of the Area 3 Taxpayer Advocacy Panel (Including the States of Florida, Georgia, Alabama, Mississippi, Louisiana, Arkansas, and the Territory of Puerto Rico)

AGENCY: Internal Revenue Service (IRS), Treasury.

ACTION: Notice of meeting.

SUMMARY: An open meeting of the Area 3 Taxpayer Advocacy Panel will be conducted. The Taxpayer Advocacy Panel is soliciting public comments, ideas, and suggestions on improving customer service at the Internal Revenue Service.

DATES: The meeting will be held Monday, March 8, 2010.

FOR FURTHER INFORMATION CONTACT: Sallie Chavez at 1–888–912–1227 or 954–423–7979.

SUPPLEMENTARY INFORMATION: Notice is hereby given pursuant to Section 10(a)(2) of the Federal Advisory Committee Act, 5 U.S.C. App. (1988) that a meeting of the Area 3 Taxpayer Advocacy Panel will be held Monday, March 8, 2010, at 2:30 p.m. Eastern Time via telephone conference. The public is invited to make oral comments or submit written statements for consideration. Due to limited conference lines, notification of intent to participate must be made with Sallie Chavez. For more information please contact Ms. Chavez at 1–888–912–1227 or 954–423–7979, or write TAP Office, 1000 South Pine Island Road, Suite 340, Plantation, FL 33324, or post comments to the Web site: *http://www.improveirs.org.*

The agenda will include various IRS issues.

Reason for Late Notice: Due to inclement weather and Federal office closings in the District of Columbia, key TAP staff was unavailable to prepare and submit notice in time to meet the 15-day notice requirement. Scheduling conflicts with other meetings prevent rescheduling this meeting.

Dated: February 12, 2010.

Linda Rivera,

Senior Program Analyst, Taxpayer Advocacy Panel.

[FR Doc. 2010–3181 Filed 2–18–10; 8:45 am]

BILLING CODE 4830–01–P

DEPARTMENT OF THE TREASURY

Internal Revenue Service

Open Meeting of the Area 1 Taxpayer Advocacy Panel (Including the States of New York, Connecticut, Massachusetts, Rhode Island, New Hampshire, Vermont and Maine)

AGENCY: Internal Revenue Service (IRS), Treasury.

ACTION: Notice of meeting.

SUMMARY: An open meeting of the Area 1 Taxpayer Advocacy Panel will be conducted. The Taxpayer Advocacy Panel is soliciting public comments, ideas and suggestions on improving customer service at the Internal Revenue Service.

DATES: The meeting will be held Tuesday, March 16, 2010.

FOR FURTHER INFORMATION CONTACT: Audrey Y. Jenkins at 1–888–912–1227 or 718–488–2085.

SUPPLEMENTARY INFORMATION: Notice is hereby given pursuant to section 10(a)(2) of the Federal Advisory Committee Act, 5 U.S.C. App. (1988) that an open meeting of the Area 1 Taxpayer Advocacy Panel will be held Tuesday, March 16, 2010, at 10 a.m. Eastern Time via telephone conference. The public is invited to make oral comments or submit written statements for consideration. Due to limited conference lines, notification of intent to participate must be made with Audrey Y. Jenkins. For more information please contact Ms. Jenkins at 1–888–912–1227 or 718–488–2085, or write TAP Office, 10 MetroTech Center, 625 Fulton Street, Brooklyn, NY 11201, or contact us at the Web site: *http://www.improveirs.org.*

The agenda will include various IRS issues.

Dated: February 4, 2010.

Shawn F. Collins,

Acting Director, Taxpayer Advocacy Panel.

[FR Doc. 2010–3178 Filed 2–18–10; 8:45 am]

BILLING CODE 4830–01–P

DEPARTMENT OF THE TREASURY

Internal Revenue Service

Open Meeting of the Area 7 Taxpayer Advocacy Panel (Including the States of Alaska, California, Hawaii, and Nevada)

AGENCY: Internal Revenue Service (IRS), Treasury.

ACTION: Notice of meeting.

SUMMARY: An open meeting of the Area 7 Taxpayer Advocacy Panel will be conducted. The Taxpayer Advocacy Panel is soliciting public comments, ideas, and suggestions on improving customer service at the Internal Revenue Service.

DATES: The meeting will be held Wednesday, March 17, 2010.

FOR FURTHER INFORMATION CONTACT: Janice Spinks at 1–888–912–1227 or 206–220–6098.

SUPPLEMENTARY INFORMATION: Notice is hereby given pursuant to Section 10(a)(2) of the Federal Advisory Committee Act, 5 U.S.C. App. (1988) that a meeting of the Area 7 Taxpayer Advocacy Panel will be held Wednesday, March 17, 2010, at 2 p.m. Pacific Time via telephone conference. The public is invited to make oral comments or submit written statements for consideration. Due to limited

conference lines, notification of intent to participate must be made with Janice Spinks. For more information please contact Ms. Spinks at 1–888–912–1227 or 206–220–6098, or write TAP Office, 915 2nd Avenue, MS W–406, Seattle, WA 98174 or post comments to the Web site: *http://www.improveirs.org.*

The agenda will include various IRS issues.

Dated: *February 4, 2010.*

Shawn F. Collins,

Acting Director, Taxpayer Advocacy Panel.

[FR Doc. 2010–3176 Filed 2–18–10; 8:45 am]

BILLING CODE 4830–01–P

DEPARTMENT OF THE TREASURY

Internal Revenue Service

Open Meeting of the Taxpayer Advocacy Panel Joint Committee

AGENCY: Internal Revenue Service (IRS), Treasury.

ACTION: Notice of meeting.

SUMMARY: An open meeting of the Taxpayer Advocacy Panel Joint Committee will be conducted. The Taxpayer Advocacy Panel is soliciting public comment, ideas, and suggestions on improving customer service at the Internal Revenue Service.

DATES: The meeting will be held Tuesday, March 23, 2010.

FOR FURTHER INFORMATION CONTACT: Susan Gilbert at 1–888–912–1227 or (515) 564–6638.

SUPPLEMENTARY INFORMATION: Notice is hereby given pursuant to Section 10(a)(2) of the Federal Advisory Committee Act, 5 U.S.C. App. (1988) that an open meeting of the Taxpayer Advocacy Panel Joint Committee will be held Tuesday, March 23, 2010, at 3 p.m. Eastern Time via telephone conference. The public is invited to make oral comments or submit written statements for consideration. Due to limited conference lines, notification of intent to participate must be made with Susan Gilbert. For more information please contact Ms. Gilbert at 1–888–912–1227 or (515) 564–6638 or write: TAP Office, 210 Walnut Street, Stop 5115, Des Moines, IA 50309 or contact us at the Web site: *http://www.improveirs.org.*

The agenda will include various IRS issues.

Dated: February 4, 2010.

Shawn F. Collins,

Acting Director, Taxpayer Advocacy Panel.

[FR Doc. 2010–3173 Filed 2–18–10; 8:45 am]

BILLING CODE 4830–01–P

DEPARTMENT OF THE TREASURY

Internal Revenue Service

Open Meeting of the Area 3 Taxpayer Advocacy Panel (Including the States of Florida, Georgia, Alabama, Mississippi, Louisiana, Arkansas, and the Territory of Puerto Rico)

AGENCY: Internal Revenue Service (IRS), Treasury.

ACTION: Notice of meeting.

SUMMARY: An open meeting of the Area 3 Taxpayer Advocacy Panel will be conducted. The Taxpayer Advocacy Panel is soliciting public comments, ideas, and suggestions on improving customer service at the Internal Revenue Service.

DATES: The meeting will be held Monday, March 8, 2010.

FOR FURTHER INFORMATION CONTACT: Sallie Chavez at 1–888–912–1227 or 954–423–7979.

SUPPLEMENTARY INFORMATION: Notice is hereby given pursuant to Section 10(a)(2) of the Federal Advisory Committee Act, 5 U.S.C. App. (1988) that a meeting of the Area 3 Taxpayer Advocacy Panel will be held Monday, March 8, 2010, at 2:30 p.m. Eastern Time via telephone conference. The public is invited to make oral comments or submit written statements for consideration. Due to limited conference lines, notification of intent to participate must be made with Sallie Chavez. For more information please contact Ms. Chavez at 1–888–912–1227 or 954–423–7979, or write TAP Office, 1000 South Pine Island Road, Suite 340, Plantation, FL 33324, or post comments to the Web site: *http://www.improveirs.org.*

The agenda will include various IRS issues.

Dated: February 4, 2010.

Linda Rivera,

Senior Program Analyst, Taxpayer Advocacy Panel.

[FR Doc. 2010–3171 Filed 2–18–10; 8:45 am]

BILLING CODE 4830–01–P

DEPARTMENT OF THE TREASURY

Internal Revenue Service

Open Meeting of the Taxpayer Advocacy Panel Tax Forms and Publications/MLI Project Committee

AGENCY: Internal Revenue Service (IRS), Treasury.

ACTION: Notice of meeting.

SUMMARY: An open meeting of the Taxpayer Advocacy Panel Tax Forms and Publications/MLI Project Committee will be conducted. The Taxpayer Advocacy Panel is soliciting public comments, ideas and suggestions on improving customer service at the Internal Revenue Service.

DATES: The meeting will be held Thursday, March 11, 2010.

FOR FURTHER INFORMATION CONTACT: Marisa Knispel at 1–888–912–1227 or 718–488–3557

SUPPLEMENTARY INFORMATION: Notice is hereby given pursuant to section 10(a)(2) of the Federal Advisory Committee Act, 5 U.S.C. App. (1988) that an open meeting of the Taxpayer Advocacy Panel Tax Forms and Publications/MLI Project Committee will be held Thursday, March 11, 2010, at 1 p.m. Eastern Time via telephone conference. The public is invited to make oral comments or submit written statements for consideration. Due to limited conference lines, notification of intent to participate must be made with Marisa Knispel. For more information, please contact Ms. Knispel at 1–888–912–1227 or 718–488–3557, or write TAP Office, 10 MetroTech Center, 625 Fulton Street, Brooklyn, NY 11201, or post comments to the Web site: *http://www.improveirs.org.*

The agenda will include various IRS issues.

Reason for Late Notice: Due to inclement weather and federal office closings in the District of Columbia, key TAP staff was unavailable to prepare and submit notice in time to meet the 15-day notice requirement. Scheduling conflicts with other meetings prevent rescheduling this meeting.

Dated: February 12, 2010.

Linda Rivera,

Senior Program Analyst, Taxpayer Advocacy Panel.

[FR Doc. 2010–3170 Filed 2–18–10; 8:45 am]

BILLING CODE 4830–01–P

DEPARTMENT OF THE TREASURY

Internal Revenue Service

Open Meeting of the Area 2 Taxpayer Advocacy Panel (Including the States of Delaware, North Carolina, South Carolina, New Jersey, Maryland, Pennsylvania, Virginia, West Virginia and the District of Columbia)

AGENCY: Internal Revenue Service (IRS), Treasury.

ACTION: Notice of meeting.

SUMMARY: An open meeting of the Area 2 Taxpayer Advocacy Panel will be conducted. The Taxpayer Advocacy Panel is soliciting public comments,

ideas, and suggestions on improving customer service at the Internal Revenue Service.

DATES: The meeting will be held Wednesday, March 17, 2010.

FOR FURTHER INFORMATION CONTACT: Donna Powers at 1–888–912–1227 or 954–423–7977.

SUPPLEMENTARY INFORMATION: Notice is hereby given pursuant to section 10(a)(2) of the Federal Advisory Committee Act, 5 U.S.C. App. (1988) that an open meeting of the Area 2 Taxpayer Advocacy Panel will be held Wednesday, March 17, 2010, at 2:30 p.m. Eastern Time via telephone conference. The public is invited to make oral comments or submit written statements for consideration. Due to limited conference lines, notification of intent to participate must be made with Donna Powers. For more information please contact Mrs. Powers at 1–888–912–1227 or 954–423–7977, or write TAP Office, 1000 South Pine Island Road, Suite 340, Plantation, FL 33324, or post comments to the Web site: *http://www.improveirs.org.*

The agenda will include various IRS issues.

Dated: February 4, 2010.

Shawn F. Collins,

Acting Director, Taxpayer Advocacy Panel.

[FR Doc. 2010–3179 Filed 2–18–10; 8:45 am]

BILLING CODE 4830–01–P

U.S.-CHINA ECONOMIC AND SECURITY REVIEW COMMISSION

Notice of Open Public Hearing

AGENCY: U.S.-China Economic and Security Review Commission.

ACTION: Notice of open public hearing—February 25, 2010, Washington, DC.

SUMMARY: Notice is hereby given of the following hearing of the U.S.-China Economic and Security Review Commission.

Name: Daniel M. Slane, Chairman of the U.S.-China Economic and Security Review Commission.

The Commission is mandated by Congress to investigate, assess, and report to Congress annually on "the national security implications of the economic relationship between the United States and the People's Republic of China."

Pursuant to this mandate, the Commission will hold a public hearing in Washington, DC on February 25, 2010, to address "U.S. Debt to China: Implications and Repercussions."

Background

This is the second public hearing the Commission will hold during its 2010 report cycle to collect input from leading academic, industry, and government experts on national security implications of the U.S. bilateral trade and economic relationship with China. The February 25 hearing will examine China's lending activities, China's current holdings of U.S. debt and other securities and future trends, and the economic, political, diplomatic, and security implications of U.S. debt to China.

The February 25 hearing will be Co-chaired by Commissioners Michael R. Wessel and Robin Cleveland.

Any interested party may file a written statement by February 25, 2010, by mailing to the contact below. On February 25, the hearing will be held in two sessions, one in the morning and one in the afternoon. A portion of each panel will include a question and answer period between the Commissioners and the witnesses.

Transcripts of past Commission public hearings may be obtained from the USCC Web Site *http://www.uscc.gov*.

Date and Time: Thursday, February 25, 2010, 8:45 a.m. to 2 p.m. Eastern Standard Time. A detailed agenda for the hearing will be posted to the Commission's Web Site at *http://www.uscc.gov* as soon as available.

ADDRESSES: The hearing will be held on Capitol Hill in Room 562 of the Dirksen Senate Office Building located at First Street and Constitution Avenue, NE., Washington, DC 20510. Public seating is limited to about 50 people on a first come, first served basis. Advance reservations are not required.

FOR FURTHER INFORMATION CONTACT: Any member of the public wishing further information concerning the hearing should contact Kathy Michels, Associate Director for the U.S.-China Economic and Security Review Commission, 444 North Capitol Street, NW., Suite 602, Washington, DC 20001; phone: 202–624–1409, or via e-mail at *kmichels@uscc.gov*.

Authority: Congress created the U.S.-China Economic and Security Review Commission in 2000 in the National Defense Authorization Act (Pub. L. 106–398), as amended by Division P of the Consolidated Appropriations Resolution, 2003 (Pub. L. 108–7), as amended by Public Law 109–108 (November 22, 2005).

Dated: February 12, 2010.

Kathleen J. Michels,

Associate Director, U.S.-China Economic and Security Review Commission.

[FR Doc. 2010–3224 Filed 2–18–10; 8:45 am]

BILLING CODE 1137–00–P

Reader Aids

Federal Register

Vol. 75, No. 33

Friday, February 19, 2010

CUSTOMER SERVICE AND INFORMATION

Federal Register/Code of Federal Regulations	
General Information, indexes and other finding aids	**202–741–6000**
Laws	**741–6000**
Presidential Documents	
Executive orders and proclamations	**741–6000**
The United States Government Manual	**741–6000**
Other Services	
Electronic and on-line services (voice)	**741–6020**
Privacy Act Compilation	**741–6064**
Public Laws Update Service (numbers, dates, etc.)	**741–6043**
TTY for the deaf-and-hard-of-hearing	**741–6086**

ELECTRONIC RESEARCH

World Wide Web

Full text of the daily Federal Register, CFR and other publications is located at: **http://www.gpoaccess.gov/nara/index.html**

Federal Register information and research tools, including Public Inspection List, indexes, and links to GPO Access are located at: **http://www.archives.gov/federal__register**

E-mail

FEDREGTOC-L (Federal Register Table of Contents LISTSERV) is an open e-mail service that provides subscribers with a digital form of the Federal Register Table of Contents. The digital form of the Federal Register Table of Contents includes HTML and PDF links to the full text of each document.

To join or leave, go to **http://listserv.access.gpo.gov** and select *Online mailing list archives, FEDREGTOC-L, Join or leave the list (or change settings);* then follow the instructions.

PENS (Public Law Electronic Notification Service) is an e-mail service that notifies subscribers of recently enacted laws.

To subscribe, go to **http://listserv.gsa.gov/archives/publaws-l.html** and select *Join or leave the list (or change settings);* then follow the instructions.

FEDREGTOC-L and **PENS** are mailing lists only. We cannot respond to specific inquiries.

Reference questions. Send questions and comments about the Federal Register system to: **fedreg.info@nara.gov**

The Federal Register staff cannot interpret specific documents or regulations.

Reminders. Effective January 1, 2009, the Reminders, including Rules Going Into Effect and Comments Due Next Week, no longer appear in the Reader Aids section of the Federal Register. This information can be found online at **http://www.regulations.gov.**

CFR Checklist. Effective January 1, 2009, the CFR Checklist no longer appears in the Federal Register. This information can be found online at **http://bookstore.gpo.gov/.**

FEDERAL REGISTER PAGES AND DATE, FEBRUARY

4973–5224 1
5225–5480 2
5481–5674 3
5675–5876 4
5877–6088 5
6089–6298 8
6299–6538 9
6539–6812 10
6813–6838 11
6839–7026 12
7027–7148 16
7149–7196 17
7197–7336 18
7337–7544 19

CFR PARTS AFFECTED DURING FEBRUARY

At the end of each month, the Office of the Federal Register publishes separately a List of CFR Sections Affected (LSA), which lists parts and sections affected by documents published since the revision date of each title.

2 CFR

Proposed Rules:
Ch. I 7316
25 7316
27 7316
35 7316
77 7316
180 7316

3 CFR

Proclamations:
8476 6083
8477 6085

Executive Orders:
13530 5481

Administrative Orders:
Presidential Determinations:
No. 2010-04 of February 3, 2010 7337
Notices:
Notice of February 2, 2010 5675
Memorandums:
Memo. of January 29, 2010 5485
Memorandum of February 3, 2010 6087
Memorandum of February 9, 2010 7197

5 CFR

Proposed Rules:
2423 5003

6 CFR

5 ..... 5487, 5491

7 CFR

205 7154
247 5877
625 6539
650 6553
652 6839
925 5879
944 5879
1208 6089

Proposed Rules:
929 ..... 5898, 5900
1208 6131
1450 6264
1720 5902
2902 6796

8 CFR

1 5225
292 5225

9 CFR

201 6299

10 CFR

50 5495

Proposed Rules:
431 5544

11 CFR

Proposed Rules:
100 6590
109 6590

12 CFR

701 7339
706 6558

Proposed Rules:
701 6151
1225 6151

14 CFR

25 6092
39 ..... 5677, 5681, 5684, 5685, 5689 5690, 5692, 5695, 6849, 6852, 6854, 7027, 7342
43 5204
61 5204
71 ..... 6094, 6095
91 5204
97 ..... 5230, 5232
121 7345
125 7345
135 7345
141 5204
314 5697
331 5234

Proposed Rules:
39 ..... 6154, 6157, 6160, 6162, 6821, 6860, 6862, 6865, 7209, 7405, 7407, 7409
61 6164
71 ..... 5007, 5702, 5703, 5704, 5904, 5905, 6319, 6320, 6592, 6593, 6594, 6595
121 6164

15 CFR

740 6301
744 7358
902 ..... 5498, 7361
922 7361

17 CFR

211 6290
231 6290
241 6290

Proposed Rules:
240 6596

18 CFR

284 5178

Proposed Rules:
410 7411

20 CFR

10 5499

655.....6884, 7367

21 CFR

73.....5887
558.....5887
1309.....4973
Proposed Rules:
16.....7412
58.....7412
71.....7412
101.....7412
170.....7412
171.....7412
190.....7412
312.....7412
511.....7412
571.....7412
812.....7412

22 CFR

Proposed Rules:
22.....6321

24 CFR

201.....5706
203.....5706
3280.....5888
3282.....5888
Proposed Rules:
30.....7149
3400.....7149

26 CFR

54.....5452
301.....6095
Proposed Rules:
1.....5253, 6166
31.....6166
54.....5410
301.....6166

28 CFR

0.....4982

29 CFR

501.....6884, 7367
2590.....5410
4022.....6857
Proposed Rules:
403.....5456
1625.....7212
1910.....5545, 5707
2509.....5253
2520.....5253
2550.....5253

30 CFR

Proposed Rules:
57.....5009
75.....5009
934.....6330
950.....6332

31 CFR

103.....6560
548.....5502

32 CFR

706.....5235, 6096, 6858
Proposed Rules:
199.....6335

33 CFR

165.....5511, 6096
Proposed Rules:
165.....5907

37 CFR

380.....6097
382.....5513
Proposed Rules:
41.....5012

38 CFR

74.....6098
Proposed Rules:
17.....7218

39 CFR

965.....6570
3020.....5236, 6108, 7201
Proposed Rules:
3050.....7426

40 CFR

9.....4983
50.....6474
52.....5514, 5698, 6112, 6305, 6307, 6309, 6570, 6813
58.....6474
180.....5515, 5518, 5522, 5526, 6314, 6576, 6583
721.....4983
Proposed Rules:
51.....6823
52.....5707, 6336, 6337, 6338, 6823, 6827
80.....7426
82.....6338
85.....7426
86.....7426
228.....5708
258.....6597
320.....5715
721.....5546
790.....7428

44 CFR

64.....5890, 5893, 6120
67.....5894
Proposed Rules:
67.....5909, 5925, 5929, 5930, 6600

45 CFR

146.....5410
1609.....6816
1610.....6816
1642.....6816

47 CFR

2.....6316
79.....7368, 7369, 7370
80.....5241
300.....6818
Proposed Rules:
4.....6339
52.....5013
73.....5015, 6612

48 CFR

217.....6819
512.....5241
552.....5241
Proposed Rules:
1.....5716
2.....5716
3.....5716
5.....5716
6.....5716
7.....5716
8.....5716
12.....5716
13.....5716
15.....5716
16.....5716
17.....5716
19.....5716
22.....5716
23.....5716
28.....5716
32.....5716
36.....5716
42.....5716
43.....5716
50.....5716
52.....5716

49 CFR

7.....5243
10.....5243
26.....5535
40.....5243
171.....5376
172.....5376
173.....5376
174.....5376
178.....5376
192.....5224, 5536
195.....5536
390.....4996
571.....6123, 7370
578.....5224
599.....5248
Proposed Rules:
23.....5551
40.....5722
107.....5258
571.....5553
572.....5931
1244.....5261

50 CFR

229.....7383
300.....7361
622.....6318, 7402
648.....5498, 5537, 6586
665.....7204
679.....5251, 5541, 6129, 6588, 6589, 7205, 7403
680.....7205
Proposed Rules:
17.....5263, 5732, 6438, 6613
223.....6616
224.....6616
226.....5015, 7434
300.....5745
600.....7227
648.....5016, 7435
679.....7228
697.....7227

LIST OF PUBLIC LAWS

This is a continuing list of public bills from the current session of Congress which have become Federal laws. It may be used in conjunction with "P L U S" (Public Laws Update Service) on 202–741–6043. This list is also available online at *http://www.archives.gov/federal-register/laws.html*.

The text of laws is not published in the **Federal Register** but may be ordered in "slip law" (individual pamphlet) form from the Superintendent of Documents, U.S. Government Printing Office, Washington, DC 20402 (phone, 202–512–1808). The text will also be made available on the Internet from GPO Access at *http://www.gpoaccess.gov/plaws/index.html*. Some laws may not yet be available.

H.J. Res. 45/P.L. 111–139
Increasing the statutory limit on the public debt. (Feb. 12, 2010)

H.R. 730/P.L. 111–140
Nuclear Forensics and Attribution Act (Feb. 16, 2010)

Last List February 4, 2010

Public Laws Electronic Notification Service (PENS)

PENS is a free electronic mail notification service of newly enacted public laws. To subscribe, go to *http://listserv.gsa.gov/archives/publaws-l.html*

Note: This service is strictly for E-mail notification of new laws. The text of laws is not available through this service. **PENS** cannot respond to specific inquiries sent to this address.