Federal Register

Wednesday,
March 24, 2010

Part III

Department of Energy

10 CFR Part 430

Energy Conservation Program: Test Procedures and Standards for Fluorescent Lamp Ballasts; Public Meeting and Availability of the Preliminary Technical Support Document; Proposed Rules

DEPARTMENT OF ENERGY

10 CFR Part 430

[Docket No. EERE–2009–BT–TP–0016]

RIN 1904–AB99

Energy Conservation Program: Test Procedures for Fluorescent Lamp Ballasts

AGENCY: Office of Energy Efficiency and Renewable Energy, Department of Energy.

ACTION: Notice of proposed rulemaking and public meeting.

SUMMARY: The U.S. Department of Energy (DOE) proposes major revisions to its test procedures for fluorescent lamp ballasts established under the Energy Policy and Conservation Act. The proposed test method would eliminate the use of photometric measurements in favor of purely electrical measurements with the goal of reducing measurement variation. DOE proposes a set of transfer functions to convert the measured ballast electrical efficiency to a ballast efficacy factor value. These revisions, however, do not concern the measurement of energy consumption of ballasts in the standby and off modes, which DOE addressed in another rulemaking. DOE also announces a public meeting to receive comment on the issues presented in this notice.

DATES: DOE will hold a public meeting on Monday, April 26, 2010, beginning at 9 a.m. in Washington, DC. The agenda for the public meeting will first cover this test procedure rulemaking for fluorescent lamp ballasts, and then the concurrent energy conservation standards rulemaking (*see* proposal in today's **Federal Register**) for the same products. Any person requesting to speak at the public meeting should submit such a request, along with an electronic copy of the statement to be given at the public meeting, before 4 p.m., Monday, April 12, 2010.

DOE will accept comments, data, and information regarding this notice of proposed rulemaking (NOPR) before or after the public meeting, but no later than June 7, 2010. *See* section V, "Public Participation," of this NOPR for details.

ADDRESSES: The public meeting will be held at the U.S. Department of Energy, Forrestal Building, Room 8E–089, 1000 Independence Avenue, SW., Washington, DC 20585–0121. To attend the public meeting, please notify Ms. Brenda Edwards at (202) 586–2945. Please note that foreign nationals participating in the public meeting are subject to advance security screening procedures. If a foreign national wishes to participate in the workshop, please inform DOE of this fact as soon as possible by contacting Ms. Brenda Edwards at (202) 586–2945 so that the necessary procedures can be completed.

Any comments submitted must identify the Fluorescent Lamp Ballast Active Mode Test Procedures NOPR, and provide the docket number EERE–2009–BT–TP–0016 and/or Regulation Identifier Number (RIN) 1904–AB99. Comments may be submitted using any of the following methods:

Federal eRulemaking Portal: http://www.regulations.gov. Follow the instructions for submitting comments.

E-mail: FLB–2009–TP–0016@ee.doe.gov. Include the docket number EERE–2009–BT–TP–0016 and/or RIN 1904–AB99 in the subject line of the message.

Postal Mail: Ms. Brenda Edwards, U.S. Department of Energy, Building Technologies Program, Mailstop EE–2J, 1000 Independence Avenue, SW., Washington, DC, 20585–0121. Please submit one signed paper original.

Hand Delivery/Courier: Ms. Brenda Edwards, U.S. Department of Energy, Building Technologies Program, 6th Floor, 950 L'Enfant Plaza, SW., Washington, DC 20024. Telephone: (202) 586–2945. Please submit one signed paper original.

For detailed instructions on submitting comments and additional information on the rulemaking process, *see* section V, "Public Participation," of this document.

Docket: For access to the docket to read background documents or comments received, visit the U.S. Department of Energy, 6th Floor, 950 L'Enfant Plaza, SW., Washington, DC 20024, (202) 586–2945, between 9 a.m. and 4 p.m., Monday through Friday, except Federal holidays. Please call Ms. Brenda Edwards at (202) 586–2945 for additional information regarding visiting the Resource Room.

FOR FURTHER INFORMATION CONTACT: Ms. Linda Graves, U.S. Department of Energy, Office of Energy Efficiency and Renewable Energy, Building Technologies Program, EE–2J, 1000 Independence Avenue, SW., Washington, DC 20585–0121. Telephone: (202) 586–1851. E-mail: *Linda.Graves@ee.doe.gov.* In the Office of General Counsel, contact Ms. Betsy Kohl, U.S. Department of Energy, Office of the General Counsel, GC–71, 1000 Independence Avenue, SW., Washington, DC 20585. Telephone: (202) 586–7796. E-mail: *Betsy.Kohl@hq.doe.gov.*

For additional information on how to submit or review public comments and on how to participate in the public meeting, contact Ms. Brenda Edwards, U.S. Department of Energy, Office of Energy Efficiency and Renewable Energy, Building Technologies Program, EE–2J, 1000 Independence Avenue, SW., Washington, DC 20585–0121. Telephone: (202) 586–2945. E-mail: *Brenda.Edwards@ee.doe.gov.*

SUPPLEMENTARY INFORMATION:

Table of Contents

I. Authority and Background
II. Summary of the Proposal
III. Discussion
A. Scope of Applicability
1. Ballasts Covered
2. Effective Date
B. Existing Test Procedure
C. Drawbacks of Existing BEF Test Procedure
D. Efficiency Metric for Fluorescent Lamp Ballasts
E. Test Procedure Improvement Options
1. Resistor-Based Ballast Efficiency Correlated to Ballast Efficacy Factor
2. Lamp-Based Ballast Efficiency Correlated to Ballast Efficacy Factor
3. Improvements to Existing Test Procedure
4. Relative System Efficacy
F. Proposed Test Procedure
1. Test Conditions
2. Test Setup
3. Test Method
4. Calculations
5. Transfer Equations—General Method
6. Transfer Equations—Testing, Analysis, and Results
7. Resistor Value Determination
8. Non-Operational Ballasts When Connected to a Resistor
9. Existing Test Procedure Update
10. References to ANSI C82.2–2002
G. Burden to Conduct the Proposed Test Procedure
H. Impact on Measured Energy Efficiency
I. Certification and Enforcement
IV. Procedural Issues and Regulatory Review
A. Executive Order 12866
B. National Environmental Policy Act
C. Regulatory Flexibility Act
D. Paperwork Reduction Act
E. Unfunded Mandates Reform Act of 1995
F. Treasury and General Government Appropriations Act, 1999
G. Executive Order 13132
H. Executive Order 12988
I. Treasury and General Government Appropriations Act, 2001
J. Executive Order 13211
K. Executive Order 12630
L. Section 32 of the Federal Energy Administration Act of 1974
V. Public Participation
A. Attendance at Public Meeting
B. Procedure for Submitting Requests to Speak
C. Conduct of Public Meeting
D. Submission of Comments
E. Issues on Which DOE Seeks Comment
1. All Aspects of the Existing Test Procedure for Active Mode Energy Consumption

2. Appropriate Usage of ANSI Standards
3. Method of Measurement for Dimming Ballasts
4. Resistor-based Ballast Efficiency Test Method
5. Alternative Approaches to Amending the Test Procedure
6. Ballasts that do not Operate Resistors
7. Ballast Factor Variation Due to Variations in Measured Lamp Power
8. Ballast Factor Binning
9. Transfer Equations
10. Scaling Transfer Equations
11. Burden on Manufacturers and Testing Facilities
VI. Approval of the Office of the Secretary

I. Authority and Background

Title III of the Energy Policy and Conservation Act (42 U.S.C. 6291 *et seq.;* EPCA or the Act) sets forth a variety of provisions designed to improve energy efficiency. Part A of Title III (42 U.S.C. 6291–6309) establishes the "Energy Conservation Program for Consumer Products Other Than Automobiles," which covers consumer products and certain commercial products (all of which are referred to below as "covered products"), including fluorescent lamp ballasts (ballasts). (42 U.S.C. 6291(1)(2) and 6292(a)(13))

Under the Act, the overall program consists essentially of the following parts: testing, labeling, and Federal energy conservation standards. The testing requirements consist of test procedures, prescribed under EPCA, that manufacturers of covered products must use as the basis for certifying to the DOE that their products comply with energy conservation standards adopted under EPCA and for representations as to the efficiency of their products. Also, these test procedures must be used whenever testing is required in an enforcement action to determine whether covered products comply with EPCA standards.

Section 323 of EPCA (42 U.S.C. 6293) sets forth generally applicable criteria and procedures for DOE's adoption and amendment of test procedures. It states, for example, that "[a]ny test procedures prescribed or amended under this section shall be reasonably designed to produce test results which measure energy efficiency, energy use,* * * or estimated annual operating cost of a covered product during a representative average use cycle or period of use, as determined by the Secretary [of Energy], and shall not be unduly burdensome to conduct." (42 U.S.C. 6293(b)(3)) In addition, if DOE determines that a test procedure amendment is warranted, it must publish proposed test procedures and offer the public an opportunity to present oral and written comments on them. (42 U.S.C. 6293(b)(2)) Finally, in any rulemaking to amend a test procedure, DOE must determine "to what extent, if any, the proposed test procedure would alter the measured energy efficiency * * * of any covered product as determined under the existing test procedure." (42 U.S.C. 6293(e)(1)) If DOE determines that the amended test procedure would alter the measured efficiency of a covered product, DOE must amend the applicable energy conservation standard accordingly. (42 U.S.C. 6293(e)(2))

As to fluorescent lamp ballasts specifically, DOE must "prescribe test procedures that are in accord with ANSI [1] standard C82.2–1984 [2] or other test procedures determined appropriate by the Secretary." (42 U.S.C. 6293(b)(5)) DOE's existing test procedures for ballasts, adopted pursuant to these and the above-described provisions, appear at 10 CFR Part 430, Subpart B, Appendix Q.

This test procedure rulemaking will fulfill the periodic review requirement prescribed by the Energy Independence and Security Act of 2007. "At least once every 7 years, the Secretary shall review test procedures for all covered products and—amend test procedures with respect to any covered product * * * or publish notice in the **Federal Register** of any determination not to amend a test procedure." (42 U.S.C. 6293(b)(1)(A) DOE invites comment on all aspects of the existing test procedures for fluorescent lamp ballasts for active mode energy consumption that appear at Title 10 of the CFR Part 430, Subpart B, Appendix Q ("Uniform Test Method for Measuring the Energy Consumption of Fluorescent Lamp Ballasts").

In a separate rulemaking proceeding, DOE is considering amending energy conservation standards for fluorescent lamp ballasts (docket number EERE–2007–BT–STD– 0016; hereinafter referred to as the "fluorescent lamp ballast standards rulemaking"). DOE initiated that rulemaking by publishing a **Federal Register** (FR) notice announcing a public meeting and availability of the framework document ("Energy Efficiency Program for Consumer Products: Public Meeting and Availability of the Framework Document for Fluorescent Lamp Ballasts,") on January 22, 2008. 73 FR 3653. DOE has completed the preliminary analyses for the energy conservation standard rulemaking and published in today's **Federal Register** a notice announcing a public meeting and availability of the preliminary technical support document.

On February 6, 2008, DOE held a public meeting in Washington, DC, to discuss the framework document for the fluorescent lamp ballast energy conservation standards rulemaking (hereinafter referred to as the "2008 public meeting"). At that meeting, attendees also discussed potential revisions to the test procedure for active mode energy consumption. All comments on the fluorescent lamp ballast standards rulemaking regarding the measurement of active mode energy consumption are discussed in section III of this proposed rulemaking.

DOE has also completed a standby mode and off mode test procedure. The Energy Independence and Security Act of 2007 (Pub. L. 110–140) amended EPCA to require that, for each covered product for which DOE's current test procedures do not fully account for standby mode and off mode energy consumption, DOE amend the test procedures to include standby mode and off mode energy consumption into the overall energy efficiency, energy consumption, or other energy descriptor for that product. If an integrated test procedure is technically infeasible, DOE must prescribe a separate standby mode and off mode energy use test procedure, if technically feasible. (EPCA section 325(gg)(2)(A); 42 U.S.C. 6295(gg)(2)(A)) DOE published a final rule addressing standby mode and off mode energy consumption for fluorescent lamp ballasts in the **Federal Register** on October 22, 2009. 74 FR 54445.

II. Summary of the Proposal

In this notice of proposed rulemaking (NOPR), DOE proposes to modify the current test procedures for fluorescent lamp ballasts to revise the scope of applicability of this test procedure for consistency with the ongoing fluorescent lamp ballast standards rulemaking, improve measurement variability, and update the referenced standards. DOE also proposes provisions for manufacturers to submit compliance statements and certification reports for fluorescent lamp ballasts. The following paragraphs summarize these proposed changes.

In the preliminary technical support document for the fluorescent lamp ballast standards rulemaking, DOE makes a preliminary determination of the scope of coverage. Today's proposed test procedure includes specific procedures for ballasts identified in the preliminary determination of scope. If the scope of coverage changes in the fluorescent lamp ballast standards

[1] American National Standards Institute.

[2] "American National Standards for Fluorescent Lamp Ballasts—Methods of Measurement." Approved October 21, 1983.

rulemaking, DOE will add or remove provisions from the test procedure so that it is consistent with the final scope of coverage of standards. The preliminary determination of scope includes ballasts that operate multiple numbers of lamps (one through six), all values of ballast factor, and many different lamp classes including 4-foot medium bipin T8 and T12 lamps, 4-foot T5 miniature bipin lamps, 8-foot single pin slimline T8 and T12 lamps, and 8-foot recessed double contact high output T8 and T12 lamps. *See* section III.A.1 for further detail.

In addition to matching the scope of coverage for the active mode test procedure to the scope of coverage being considered in the fluorescent lamp ballast standards rulemaking, the proposed amendments seek to reduce the measurement variation inherent in the existing test procedure. The existing test procedure exhibits variation in measurements of a similar magnitude to the spread in efficiency within many fluorescent lamp ballast product classes analyzed in the preliminary determination. The test measurement variation can be attributed to reference lamp variation, lamp operation conditions, and ballast wiring. DOE believes a test procedure with reduced variation will allow for more precise standard setting and certification, compliance, and enforcement testing.

DOE's proposed test method greatly reduces the impact of reference lamps on measurement variation. The method calculates a ballast input power and output power using only electrical measurements and resistors that simulate the load placed on a ballast by a fluorescent lamp at a given operating condition. Because a resistor can be manufactured with much smaller performance tolerances than a fluorescent lamp, the resistor introduces much less variation to the operating characteristics of the ballast. This revised test method delivers increased precision, thereby allowing for greater resolution. The procedure proposed in this rulemaking measures ballast input power and ballast output power and then calculates ballast electrical efficiency (output power divided by input power). The ballast electrical efficiency is then converted to ballast efficacy factor (BEF) using a transfer equation to maintain the reported metric for energy efficiency as BEF for consistency with use of BEF in 42 U.S.C. 6295(g)(5) and (g)(8). DOE developed the transfer equation by measuring several ballasts within a product class for ballast efficiency (BE) using the proposed BE test procedure and for BEF using the existing test procedure, and then calculating a line of best fit for the combined data. This proposed method is hereafter referred to as the resistor-based ballast efficiency test procedure.

Prior to selecting the proposed test method, DOE also considered three other methods as potential improvements in the revised test procedure: (1) The lamp-based ballast efficiency (correlated to BEF) method, (2) the existing BEF method with revisions to reduce variation; and (3) the relative system efficacy (RSE) method. DOE's initial assessment of the lamp-based ballast efficiency method, which uses a lamp as a load, rather than a resistor, indicated that, similar to the resistor-based ballast efficiency method, there could be significant improvements by eliminating light output-based measurements. However, adopting that method would result in a test procedure that was still susceptible to lamp-to-lamp variability. DOE explored the existing light-output-based test procedure and found improvements could be made without making fundamental changes. DOE believes that tightening tolerances on certain specifications and clarifying loosely-defined directions can reduce measurement variation relative to the existing test procedure for fluorescent ballasts, but to a lesser extent than the proposed resistor-based BE test procedure. DOE found the RSE method to exhibit larger variation than the proposed resistor-based BE test procedure because it uses the same measurement techniques as the existing test procedure.

In any rulemaking to amend a test procedure, DOE must determine "to what extent, if any, the proposed test procedure would alter the measured energy efficiency * * * of any covered product as determined under the existing test procedure." (42 U.S.C. 6293(e)(1)) If DOE determines that the amended test procedure would alter the measured efficiency of a covered product, DOE must amend the applicable energy conservation standard accordingly. (42 U.S.C. 6293(e)(2)) The proposed test procedure would change the measured energy efficiency of some products relative to the existing test procedure. To ensure that the standards developed in the ongoing fluorescent lamp ballast standards rulemaking account for any changes to the test procedure, DOE is developing the standards based on the measured energy efficiency generated by the active mode test procedure proposed in this rulemaking. As a result, DOE proposes an effective date for this revised test procedure, to be published as Appendix Q1 of 10 CFR part 430 Subpart B, concurrent with the compliance date of the fluorescent lamp ballast standards rulemaking (approximately June 30, 2014). DOE plans to publish the final rule establishing the procedures in Appendix Q1 in the same rule document as the final rule establishing any amended standards.

DOE notes that ballasts that operate one or two 40 or 34 watt (W) 4-foot T12 medium bipin lamps (F40T12 and F34T12), two 75 W or 60 W 8-foot T12 single pin slimline lamps (F96T12 and F96T12/ES); and two 110 W and 95 W 8-foot T12 recessed double contact high output lamps (F96T12HO and F96T12HO/ES) are covered by existing energy conservation standards. 10 CFR 430.32(m). Until the proposed effective date of the test procedure to be published at Appendix Q1, these ballasts should continue to be tested using the existing test procedure to determine compliance with existing standards. DOE proposes in this NOPR to make minor updates to the existing test procedure, published at Appendix Q to Subpart B of part 430. DOE would update the reference to ANSI C82.2–1984 in the existing test procedure (appendix Q) to ANSI C82.2–2002. Because DOE does not believe the updated standard will impose increased testing burden or alter the measured BEF of fluorescent lamp ballasts, DOE proposes that the amendments to Appendix Q be effective 30 days after publication of this test procedure final rule. DOE notes that because use of the test method in Appendix Q1 is not appropriate for those ballasts that cannot operate a resistor load bank, manufacturers would continue to test those ballasts using the test method set forth in Appendix Q. In addition, the test procedures for any ballasts that operate in standby mode are also located in Appendix Q.

DOE also proposes amending the language in 10 CFR 430.62 to require fluorescent lamp ballast manufacturers to submit compliance statements and certification reports. This provision would also be effective 30 days after publication of this test procedure final rule. Ballast manufacturers would begin to submit these documents to certify compliance with existing fluorescent lamp ballast energy conservation standards using the test procedures at Appendix Q one year following publication of this final rule. Ballast manufacturers would certify compliance with any amended standards using the test procedures at Appendix Q1 beginning one year following the compliance date of the amended standards.

III. Discussion

A. Scope of Applicability

1. Ballasts Covered

Today's proposed test procedure is applicable to the fluorescent lamp ballasts covered in the preliminary determination of scope outlined in the preliminary technical support document for the fluorescent lamp ballast standards rulemaking. The preliminary determination of scope is as follows:

(1) Ballasts that operate one, two, three, four, five, or six straight-shaped lamps (commonly referred to as 4-foot medium bipin lamps) with medium bipin bases, a nominal overall length of 48 inches, a rated wattage [3] of 25 watts (W) or more, and an input voltage at or between 120 volts (V) and 277 V;

(2) Ballasts that operate one, two, three, four, five, or six U-shaped lamps (commonly referred to as 2-foot U-shaped lamps) with medium bipin bases, a nominal overall length between 22 and 25 inches, a rated wattage of 25 W or more, and an input voltage at or between 120 V and 277 V;

(3) Ballasts that operate one or two rapid-start lamps (commonly referred to as 8-foot high output lamps) with recessed double contact bases, a nominal overall length of 96 inches and an input voltage at or between 120 V and 277 V;

(4) Ballasts that operate one or two instant-start lamps (commonly referred to as 8-foot slimline lamps) with single pin bases, a nominal overall length of 96 inches, a rated wattage of 52 W or more, and an input voltage at or between 120 V and 277 V;

(5) Ballasts that operate one or two straight-shaped lamps (commonly referred to as 4-foot miniature bipin standard output lamps) with miniature bipin bases, a nominal length between 45 and 48 inches, a rated wattage of 26 W or more, and an input voltage at or between 120 V and 277 V;

(6) Ballasts that operate one, two, three, or four straight-shaped lamps (commonly referred to as 4-foot miniature bipin high output lamps) with miniature bipin bases, a nominal length between 45 and 48 inches, a rated wattage of 49 W or more, and an input voltage at or between 120 V and 277 V;

(7) Ballasts that operate one, two, three, or four straight-shaped lamps (commonly referred to as 4-foot medium bipin lamps) with medium bipin bases, a nominal overall length of 48 inches, a rated wattage of 25 W or more, an input voltage at or between 120 V and 277 V, a power factor of less than 0.90, and designed and labeled for use in residential applications; and

(8) Ballasts that operate one, two, three, four, five, or six rapid-start lamps (commonly referred to as 8-foot high output lamps) with recessed double contact bases, a nominal overall length of 96 inches, an input voltage at or between 120 V and 277 V, and that operate at ambient temperatures of 20 degrees Fahrenheit (°F) or less and are used in outdoor signs.

For the proposed test procedure in this rulemaking, DOE would establish particular test setups and calculations depending on the product class. When evaluating and establishing energy conservation standards, DOE divides covered products into product classes by the type of energy used, capacity, or other performance-related features that affect efficiency, considering factors such as the utility of the product to users. (*See* 42 U.S.C. 6295(q)) The fluorescent lamp ballast standards rulemaking delineates product classes based on the maximum number of lamps operated by a ballast, ballast factor, starting method, lumen package,[4] lamp base, market sector, and lamp length. Ballasts contained in the same product class are subject to the same energy conservation standards.

At the 2008 Framework public meeting for the fluorescent lamp ballast standards rulemaking, the Appliance Standards Awareness Project (ASAP) asked DOE to elaborate on how the schedules for the fluorescent lamp ballast energy conservation standard and active mode test procedure rulemakings interact. (ASAP,[5] Public Meeting Transcript, No. 9 at p. 29) Because the fluorescent lamp ballast standards rulemaking is in the preliminary analysis phase of the rulemaking process, the proposed scope of coverage is still in draft form. To ensure consistency in the scope of coverage, DOE plans to publish the final rule for this test procedure rulemaking concurrently with the ballasts standards rulemaking final rule (scheduled for June 30, 2011). Concurrent publication affords DOE the opportunity to synchronize its test procedure with the final scope of coverage for the fluorescent lamp ballast standards rulemaking. If a ballast type [6] is removed from the scope of coverage, DOE will eliminate the pertinent test procedures from the active mode test procedure in the final rule. Conversely, in the event additional ballasts are added to the scope of coverage, DOE will develop test procedures for these ballasts and update the active mode test procedure in a subsequent rulemaking. For example, in the preliminary analyses of the fluorescent lamp ballast standards rulemaking, DOE's preliminary scope of coverage that does not include ballasts capable of dimming. As DOE invites comment on this in the fluorescent lamp ballast standards rulemaking, if DOE's final scope of coverage includes dimming ballasts, DOE will need finalize test procedures for these ballasts. DOE also invites comment in this test procedure rulemaking on suggested methods of measuring the efficiency of dimming-capable ballasts.

2. Effective Date

Because some of the test procedure amendments proposed for Appendix Q1 will change measured efficiency and therefore affect compliance with existing standards, DOE proposes an effective date of the revised test procedure in Appendix Q1 to Subpart B concurrent with the compliance date of the energy conservation standards prescribed by the fluorescent lamp ballast standards rulemaking. DOE also plans to publish the final rule establishing the procedures in Appendix Q1 in the same rule document as the final rule establishing any amended standards. In the fluorescent lamp ballast standards rulemaking, DOE is developing standards that correspond with the active mode test procedure proposed in this rulemaking. The proposed active mode test procedure would be used to test ballast efficiency on or after the compliance date of the fluorescent lamp ballast standards rulemaking (approximately June 2014). Until this compliance date, fluorescent lamp ballasts would continue to be tested using the existing test procedure in Appendix Q to determine compliance with existing standards. Because the modifications to Appendix Q (an update to referenced industry standards) do not affect the measured efficiency, DOE proposes that they be effective 30 days after publication of this test procedure final rule. DOE notes that because use

[3] The July 14, 2009 final rule establishing amended energy conservation standard for general service fluorescent lamps and incandescent reflector lamps (74 FR 34080) adopted a new definition for "rated wattage" that can be found in 10 CFR 430.2. Please *see http://www1.eere.energy.gov/buildings/appliance_standards/residential/incandescent_lamps.html* for further information.

[4] Lumen package refers to the quantity of light generated by a lamp and ballast system. For example, 8-foot RDC high output HO lamps and 4-foot miniature bipin (MiniBP) HO lamps tend to operate at higher currents than 8-foot single pin (SP) slimline lamps and 4-foot MiniBP standard output (SO) lamps, respectively. This difference in operating design increases the quantity of light per unit of lamp length.

[5] A notation in the form "ASAP, Public Meeting Transcript, No. 9 at p. 29" identifies a statement made in a public meeting that DOE has received and has included in the docket of this rulemaking. This particular notation refers to a comment: (1) Submitted during the public meeting on February 6, 2008; (2) in document number 9 in the docket of this rulemaking; and (3) appearing on page 29 of the transcript.

[6] Ballast type refers to a grouping of ballasts that use the same starting method, and operate lamps of the same diameter, lumen package, base type, and length. For example, instant-start ballasts that operate 4-foot medium bipin T8 lamps.

of the test method in Appendix Q1 is not appropriate for those ballasts that cannot operate a resistor load bank, manufacturers would continue to test those ballasts using the test method set forth in Appendix Q. In addition, the test procedures for any ballasts that operate in standby mode are also located in Appendix Q.

Certification and compliance procedures for fluorescent lamp ballasts are also proposed in this rulemaking. Because these provisions also do not affect measured efficiency, DOE proposes that they be effective 30 days after publication of this test procedure final rule. Accordingly, manufacturers of fluorescent lamp ballasts would be required to submit compliance statements and certification reports to certify compliance with existing standards, using the test procedures at Appendix Q, one year following publication of the test procedure final rule. Ballast manufacturers would certify compliance with any amended standards using the test procedures at Appendix Q1 beginning one year following the compliance date of the amended standards.

B. Existing Test Procedure

The existing ballast test procedure (in Appendix Q to Subpart B of 10 CFR part 430) used to determine the energy efficiency of a fluorescent lamp ballast is based on light output measurements and ballast input power. The metric used is called ballast efficacy factor (BEF). BEF is the relative light output divided by the power input of a fluorescent lamp ballast, as measured under test conditions specified in ANSI standard C82.2–1984, or as may be prescribed by the Secretary. 42 U.S.C. 6291(29)(C)

The BEF metric uses light output of the lamp and ballast system instead of ballast electrical output power in its calculation of the efficiency of a ballast. To measure relative light output, ANSI C82.2–1984 directs the user to measure the photocell output [7] of the test ballast operating a reference lamp and the light output of a reference ballast operating the same reference lamp. Dividing photocell output of the test ballast by the photocell output of the reference ballast yields relative light output or ballast factor (BF). Concurrent with measuring relative light output, the user is directed to measure ballast input power. BEF is then calculated by dividing relative light output by input power. A ballast that produces more light than another ballast with the same input power will have a larger BEF.

C. Drawbacks of Existing BEF Test Procedure

In response to the framework document for the fluorescent lamp ballast standards rulemaking, DOE received numerous written and verbal comments from interested parties on the usage of ballast efficacy factor as the metric for describing the energy consumption of fluorescent lamp ballasts. The National Electrical Manufacturers Association (NEMA) commented that in previous rulemakings regarding efficiency of ballasts, the variation in BEF measurements was less of an issue because the range of efficiency in the market was much larger. The spread in the measured energy efficiency between magnetic and electronic ballasts, for example, was much larger than the measurement variation inherent to the existing test procedure. However, in the current market, the spread in efficiency between ballasts has a much smaller range. (NEMA, Public Meeting Transcript, No. 9 at p. 23, pp. 56–57) NEMA commented that DOE should change the metric away from BEF because BEF measurements made in accordance with the current fluorescent lamp ballast test procedure (appendix Q) can be shown to have a measurement uncertainty on the order of 5 percent. NEMA stated that when measuring the same ballast at different test laboratories with different examples of the same reference lamp, the spread in test results is similar to the range of T8 ballast BEFs observed in the market today. NEMA reasoned that in order to have meaningful verification of a standard DOE would need a metric that delineates between the products on the market. According to NEMA, the ballast industry would be challenged to come to consensus on a standard when so much variation existed in the data. (NEMA, Public Meeting Transcript, No. 9 at p. 23, pp. 35–36, pp. 56–58; NEMA,[8] No. 11 at p. 2)

DOE understands NEMA's concerns regarding the measurement uncertainty related to the BEF measurement method under the existing fluorescent lamp ballast test procedure. The measurement uncertainty would negatively impact DOE's ability to set standards for ballasts, as it could be difficult to distinguish between typical and high-efficiency ballasts. DOE agrees with NEMA's description that the range of efficiencies of ballasts available in the market have in general decreased and acknowledges the need for a test method or metric that reduces systematic error and generates more reliable test results. Reduced variation in test procedure calculations will allow for more precise standard setting and certification, compliance, and enforcement testing. DOE is proposing a test procedure that is designed to reduce systematic error and enhance energy conservation standard-setting capabilities.

NEMA also stated that lamp manufacturing variations will create variations in measured BEF values. (NEMA, Public Meeting Transcript, No. 9 at p. 38; NEMA, No. 11 at p. 6; GE, Public Meeting Transcript, No. 9 at p. 43) DOE agrees that a number of factors, in particular the manufacturing variability of lamps, can contribute to producing this uncertainty. Due to lamp manufacturing variability and in order to reduce the performance variation among those lamps selected for testing, industry standards referenced in the test procedure specify a narrower range of operating conditions for reference lamps. ANSI C82.1–1977 (referenced by ANSI C82.2–1984) specifies that a reference lamp must not vary more than 2.5 percent from the lamp parameters given in the ANSI C78 Series (1972 edition and 1975 supplement) for fluorescent lamp electrical characteristics. Even this narrowed variation allowed in the measured lamp power, however, has a significant impact on the variation in BEF. Changes in measured lamp input power result in disproportionate changes to the numerator (ballast factor) and the denominator (input power) in the BEF metric. The percent change in ballast factor is not as great as the percent change in ballast input power for a given change in measured lamp input power. Consequently, the same ballast will generate different values of BEF when tested on reference lamps with different measured power.

GE commented that in addition to reference lamp manufacturing variation, BEF can vary depending on the testing facility. (GE, Public Meeting Transcript, No. 9 at p. 43) DOE agrees that deviations in test facility environmental conditions can result in dissimilarities in measured BEF. ANSI C82.2–1984 (incorporated in the existing test procedure) allows ambient temperature

[7] The photocell output of a light source is measured in units of watts. Photocell output (watts) is one method of measuring the light output of a light source. Through the remainder of this document, DOE refers to the output of a fluorescent lamp as "light output," even though the existing test procedure indicates measuring the light with photocell output.

[8] A notation in the form "NEMA, No. 11 at p. 2" identifies a written comment that DOE has received and has included in the docket of this rulemaking or a written docket submission. This particular notation refers to a comment: (1) Submitted by NEMA; (2) in document number 11 in the docket of this rulemaking; and appearing on page 2.

to vary ±1 degrees Celsius (°C) from 25 °C. Through testing, DOE has shown ambient temperature to have an effect on BEF measurements. Specifically, DOE found that changes in ambient temperature as small as 1 °C resulted in changes in BEF as much as 1.5 percent.

NEMA commented that the BEF measurement requires photometric measurements of a reference lamp attached to the test ballast; thus, BEF values cannot be compared across ballasts that operate different lamp types. A more appropriate metric would not depend on lamp parameters or requirements. (NEMA, Public Meeting Transcript, No. 9 at p. 38, pp. 124–125; NEMA, No. 11 at p. 6) NEMA also stated that an alternative metric that is comparable across all instant-start or programmed-start ballasts and capable of including lamp types yet to be developed would be preferable to the existing test procedure using BEF. (NEMA, Public Meeting Transcript, No. 9 at pp. 76–77, p. 99) NEMA further commented that some lamps do not have ANSI standards governing their operating characteristics. Considerable variation in lamp operating conditions exists among manufacturers for these lamps because the industry has not reached a formal consensus. (NEMA, Public Meeting Transcript, No. 9 at pp. 76–77) NEMA suggested that DOE consider an alternative metric based on measuring ballast input and output electrical power as discussed in section III.E. (NEMA, Public Meeting Transcript, No. 9 at p. 32, pp. 37–38)

DOE recognizes that BEF is not comparable across all ballasts. BEF is measured and calculated using fluorescent lamps that vary in measured power, thereby impacting ballast input power. As a consequence, BEF is dependent on lamp type.[9] DOE plans to organize the covered ballasts into different product classes based on consumer utility and energy efficiency differences. Because DOE will consider a separate energy conservation standard for each of these product classes, the test procedure must make comparisons in energy efficiency possible within a product class. However, the existing BEF method does not allow for such comparisons in all circumstances, as explained in the following paragraph. DOE recognizes that comparison across product classes may also be useful for consumers of fluorescent lamp ballasts. DOE addresses this issue in its discussion of the resistor-based BE method in section III.E.1.

In the ongoing fluorescent lamp ballast standards rulemaking, DOE has tentatively determined there is no distinct consumer utility difference between T8 and T12 ballasts. As a result, DOE is considering grouping T8 and T12 ballasts in the same product class. Due to the difference in rated powers of the reference lamps, however, measured BEF values for T8 and T12 ballasts are not comparable. Because DOE plans to subject certain T8 and T12 ballasts to the same energy conservation standard (by including these ballasts in the same product class), DOE agrees that amendments to the existing active mode test procedure to allow for greater comparability across lamp types is warranted. Therefore, in this notice DOE proposes to revise the test procedure such that the reported BEF for a T12 ballast will be comparable to the reported BEF for a T8 ballast. These proposed revisions are discussed in further detail in section III.F.5.

DOE also agrees that the revised test procedure and metric should be able to encompass newly-developed lamps. The industry has not come to consensus on operating specification standards for some of these new, reduced-wattage lamps. Without consistent industry standards for lamps, light-output-based testing of BEF can vary greatly. DOE proposes to test ballasts while operating one representative load, characterizing the lamp wattage most commonly operated. The development and marketing of new, reduced-wattage lamps (with or without ANSI standards) is not a concern because today's test procedure proposes to specify a particular lamp and ballast combination for testing. *See* section III.F.2 for additional detail on DOE's preliminary decision to test ballasts while operating a load characteristic of the most common wattage lamp.

NEMA commented that lamp filament heating introduces variability into the existing BEF measurement (NEMA, Public Meeting Transcript, No. 9 at p. 39). DOE agrees the existing ballast test procedure is unclear on whether or not electrode heating should be used in the reference circuit. Electrode heating is known to increase the efficiency of a lamp, which means the same amount of input power produces more light. Consequently, the ballast factor of a test ballast tends to be smaller if the reference circuit uses electrode heating compared to a reference circuit without electrode heating. DOE agrees that the current test procedure inserts some variability into the measurement of BF and consequently BEF due to the apparent flexibility in the use of reference circuit heating. In today's proposed test procedure, DOE addresses this issue by specifying that electrode heating should always be used in the reference circuit for medium bipin, recessed double contact, and miniature bipin lamps. Electrode heating should not be used in the reference circuit for single pin lamps. As discussed in section III.E.3, DOE believes specifying whether electrode heating should be used in the reference case limits opportunity for introducing variation in the test procedure. DOE also understands that the efficiency change due to electrode heating may vary from lamp to lamp. DOE believes the variation to be relatively small, though it does not have quantitative data to characterize this variation among lamps. DOE invites comment on reasonable techniques to reduce this source of variation.

NEMA also commented that filament heating should be taken into account in comparison of ballasts with different starting methods. (NEMA, Public Meeting Transcript, No. 9 at p. 39) DOE is aware starting method can impact the measurement of ballast output power. Ballasts that employ constant electrode heating generate smaller BEF values than ballasts without constant electrode heating. Because BEF considers the light output of a ballast, constant cathode heating tends to decrease BEF because some of the ballast output power is used for purposes other than light production. From a system viewpoint, however, BEF reflects the loss in lighting efficiency due to electrode heating. Contrary to NEMA, DOE does not believe that power dissipated by the lamp electrodes should be included in the measurement of output power as this power is not used directly toward the primary function of producing light. DOE notes that it will consider setting specific standards for ballasts that employ electrode heating based on any potential consumer utility differences[10] in the ongoing fluorescent lamp ballast standards rulemaking.

NEMA also indicated T8 ballasts are particularly impacted by measurement

[9] Lamp type describes a grouping of lamps that have the same length, lumen package, base type, and diameter.

[10] In the fluorescent lamp ballast standards rulemaking, DOE has tentatively determined that while rapid-start ballasts do not offer distinct utility compared to instant-start ballasts, programmed-start ballasts do offer distinct utility compared to instant-start ballasts. DOE found that consumers frequently use rapid-start ballasts as replacements for instant-start ballasts. Programmed-start ballasts, however, can increase lamp lifetime for frequent on/off cycling applications (*e.g.* for use with occupancy sensors), providing consumer utility. Therefore, DOE has tentatively determined to group rapid-start ballasts and instant-start ballast in the same product class and place programmed-start ballasts in a separate product class.

uncertainty because much of the T8 ballast market is high-frequency electronic and T8 lamps are first operated on a low-frequency (60-hertz) reference ballast during BEF testing. NEMA asserted that lamps increase in efficiency when switching from low- to high-frequency operation, but that all lamps will not gain exactly the same amount of efficiency. NEMA mentioned it could provide data to show error of several percent when the same ballast is tested at different labs with different lamps due to the high-frequency to low-frequency comparison. (NEMA, Public Meeting Transcript, No. 9 at p. 26, p. 39)

DOE agrees that random error is introduced into the measurement and calculation of BEF due to variation in lamp efficiency gains when switching from magnetic to electronic ballasts. In general, when a lamp is run at high-frequency (electronic ballasts), the lamp requires less power to produce the same amount of light when compared to a low-frequency (magnetic) ballast. Electronic ballasts run at high frequency, so they tend to display higher BEF values than low-frequency magnetic ballasts. Part of this difference is due to the lamp operating at a lower rated wattage (increased efficiency), while the remainder is due to improvements in the electrical efficiency of the ballast. ANSI does not specify high-frequency reference conditions for 32W F32T8, 60W F96T12/ES, 95W F96T12HO/ES, and 110W F96T12HO fluorescent lamps.

Another source of variation in the existing test procedure is lamp and ballast wiring for rapid- and programmed-start ballasts. These ballasts have two wires connected to the pins on each end of the lamp. One of the two wires supplies power to the lamp arc, and the second provides power to the electrode. Depending on which pin the lamp arc wire is connected to, the current supplied to the lamp arc will encounter different amounts of resistance. The difference in resistance is due to the position on the lamp electrode where the current starts and finishes the lamp arc. When this position (hotspot) is in the center of the electrode, wiring differences do not change the measured BEF. However, when the hotspot is closer to one end or the other of the electrode, the current encounters varied resistances based on the distance it must travel through the electrode. Because ballast wires are not identified as delivering energy to the lamp arc or electrode and the position of the hotspot is unknown, this source of variation cannot be eliminated.

At the framework document public meeting, DOE received comments that ballast manufacturers and independent test labs use light output measurements for calculating ballast factor for both rapid-start and instant-start ballasts. (GE, Public Meeting Transcript, No. 9 at p. 73; Philips, Public Meeting Transcript, No. 9 at p. 74) ANSI C82.2–1984 suggests the usage of power measurements for instant-start systems, but common industry practice has been the usage of light output measurements for all ballast starting methods. Ballast factor can be calculated either as a ratio of test and reference circuit light output or as a ratio of measured lamp power. DOE notes that power measurements are somewhat impractical to conduct on ballasts that employ electrode heating because these ballasts use two wires to connect to a lamp electrode. The presence of additional wires requires more measurements to determine output power which introduces error into the results. DOE believes this technique introduces significant error through capacitance to ground and loading effects on ballasts that use electrode heating. As discussed in section III.E.3, DOE believes that one way to reduce this error would be to require light-output measurements to be used for all ballast types.

D. Efficiency Metric for Fluorescent Lamp Ballasts

A joint comment (hereafter the "Joint Comment") submitted by ASAP, the American Council for an Energy-Efficient Economy (ACEEE), the Alliance to Save Energy (ASE), the Natural Resources Defense Council (NRDC), the Northeast Energy Efficiency Partnerships (NEEP), and the Northwest Power and Conservation Council (NPCC) suggested that DOE consider a metric other than BEF that permits comparison between different lamp wattages, ballast types, and numbers of lamps operated by a ballast. (Joint Comment, No. 12 at p. 1) NEMA also recommended that DOE consider changing the metric away from BEF and toward an alternate metric. (NEMA, No. 11 at p. 2, pp. 11–12) NEMA suggested if DOE cannot change the metric from BEF, it should develop a test procedure that requires the measurement of some other metric unrelated to lamp lumen output, such as ballast efficiency [11] or relative system efficacy,[12] and then give correlations to BEF so that BEF can still be used in standard-setting. The New York State Energy Research and Development Authority (NYSERDA) also recommended consideration of RSE as an alternative metric. (NYSERDA, No. 9, pp. 27–28) NEMA asked if DOE might accept a NEMA- and ANSI-supported method of measuring BE, and correlating BE measurements with BEF values. (NEMA, Public Meeting Transcript, No. 9 at p. 32, pp. 37–38)

The energy conservation standard is specified using the metric of ballast efficacy factor. 42 U.S.C. 6295(g)(5), (g)(8) In this rulemaking, DOE proposes measuring an alternate metric (ballast efficiency) and using a set of correlation functions so that BEF values can be reported.

Acuity Brands Lighting also commented that much of the marketplace (end-users, lighting designers, architects, and electrical engineers) do not use the BEF metric and may not have knowledge of it. Acuity Brands indicated that luminaire manufacturers are the primary users of BEF values, using them in ballast purchasing decisions for selection of products compliant with regulations. Acuity Brands also indicated that a change in metric would not impact the end-user as much it may impact luminaire manufacturers. (Acuity Brands Lighting, Public Meeting Transcript, No. 9 at pp. 45–46) DOE understands that the lighting design process involves metrics other than BEF. Lamp, ballast, and luminaire combinations may be more or less efficient when analyzed as a complete system. End-users may make their purchasing decisions from this system viewpoint. DOE appreciates this comment; however, DOE proposes the use of transfer equations to convert BE values to BEF for consistency with use of the BEF metric in 42 U.S.C. 6295(g)(5) and (g)(8).

The Joint Comment suggested that an alternate metric should account for all power loads served by the ballast, including lamp arc power, cathode power, and standby power consumption. (Joint Comment, No. 12 at p. 1) DOE understands the importance of capturing all power loads served by a fluorescent lamp ballast. DOE notes that BEF does capture all power modes listed by the Joint Comment (lamp arc power and cathode power) except for standby mode consumption. However, DOE does not believe it is feasible to incorporate standby power into the BEF metric. The BEF metric relates light

[11] Ballast efficiency aims to capture the electrical efficiency of a ballast by eliminating usage of lamps and photometric measurements in the test method. Ballast efficiency equals ballast output power divided by ballast input power. *See* section III.E.4.

[12] Relative system efficacy provides a greater range of comparability among ballast types in comparison to ballast efficacy factor. RSE is based on the BEF metric and creates minimal incremental testing burden. *See* section III.E.4.

output (relative to a reference system) to input power. Ballasts that produce more light using the same input wattage have a larger BEF value. Standby mode power, however, performs a different function. Instead of using power for light output, standby mode power is used to facilitate activation or deactivation of other functions (active mode functions, *i.e.,* light output) by a remote switch. Because BEF is a measure of light output divided by input power and not energy consumption, DOE does not believe it is feasible to incorporate a measure of standby mode energy use into the BEF metric for active mode energy consumption. While DOE's preliminary determination of the scope of coverage in the fluorescent lamp ballasts standards rulemaking does not include ballasts capable of operating in standby mode, if the scope of coverage changes to include these ballasts, DOE will set separate standby mode energy conservation standards. Test procedures for the measurement of standby mode energy consumption for fluorescent lamp ballasts can be found in Appendix Q.

E. Test Procedure Improvement Options

Given that alternative methods of testing may result in reduced measurement variation compared to the existing test procedure for BEF, DOE considered three new methods for measuring the efficiency of a ballast and one improved version of the existing method. The first method is called the resistor-based ballast efficiency method, and requires first measuring an estimate of ballast electrical efficiency when operating a resistor load and then converting the estimate to BEF. The second method, called the lamp-based ballast efficiency method, involves measuring ballast efficiency using a lamp as the ballast load and then converting that BE to BEF. The third method makes small changes to the existing test procedure to improve the precision of BEF measurement. The fourth method measures relative system efficacy, which is a variation of ballast efficacy factor that is more comparable across ballast types. While DOE proposes the first method to be used as the new test procedure for determination of fluorescent lamp ballast energy consumption, DOE is still considering all of these options for improvement of the test procedure and therefore invites comments on all alternative methods. The following sections discuss the merits and drawbacks of the four methods.

1. Resistor-Based Ballast Efficiency Correlated to Ballast Efficacy Factor

NEMA suggested at the framework document public meeting for the fluorescent lamp ballast standards rulemaking that DOE should consider using the BE metric. (NEMA, Public Meeting Transcript, No. 9 at p. 32, pp. 37–38) Following the public meeting, DOE participated in the NEMA task force on ballast efficiency through June 2009. Through a series of conference calls and meetings, DOE learned about the resistor-based BE method and participated in its development for four-foot 32W MBP T8 normal ballast factor ballasts. Using the data gathered and methodology used in the NEMA task force DOE then continued development of the proposed test procedure for other lamp types. DOE defined additional resistor values, conducted extensive testing for both BE and BEF in many product classes, created transfer equations so that BEF values could be reported, and specified instrumentation specifications in its development of the proposed test procedure.

Ballast efficiency equals lamp arc power divided by ballast input power. Ballast efficiency aims to capture the electrical efficiency of a ballast by eliminating usage of lamps and photometric measurements. Instead of using a lamp and measuring light output, the resistor-based BE method uses resistors (a resistor load bank) to simulate the lamp and makes an electrical measurement of power through the arc-resistor. Because a resistor can be manufactured with much smaller performance tolerances than a fluorescent lamp, the resistor introduces much less variation into the operating characteristics of the ballast.

NEMA commented that a BE measurement does not require lamp electrical and photometric measurements and, thus, is both easier to execute and more accurate. NEMA also stated that BE measurements have lower measurement variation (on the order of 1 to 2 percent) between test facilities and do not require ANSI standards for lamps that the ballast is designed to operate. NEMA believes that the ballast efficiency metric could be used to compare all ballasts of a given type (*e.g.,* all instant-start ballasts, all programmed-start ballasts), regardless of the lamp types that the ballasts support (including lamp types yet to be developed). (NEMA, Public Meeting Transcript, No. 9 at pp. 25–27, p. 36, pp. 76–77, pp. 100–101)

DOE agrees that ballast efficiency would likely show less variation than BEF and would allow for more equitable comparison among ballasts operating different numbers of lamps or lamp wattages. As discussed in section III.C, much of the variation inherent in the existing test procedure is due to variation among reference lamps. The resistor-based BE method reduces much of the measurement variation due to reference lamps by using a resistor load bank to simulate the load placed on a ballast during the measurement of input and output power. Decreased measurement variation allows for more precise standard setting and certification, compliance, and enforcement testing. DOE acknowledges that the BE metric would allow for comparability across large portions of the ballast market and that such comparability provides benefit to consumers. DOE proposes conversion to BEF values, however, to measure energy efficiency in a repeatable manner that provides comparison for products in the same product class and that is also consistent with the statutory metric set forth at 42 U.S.C. 6295(g)(5) and (g)(8).

DOE notes that use of ANSI standards would be required for lamps in today's proposed test method because of the need to define the ballast factor of a ballast. Ballast factor is a necessary input to the transfer equations between BE and BEF as discussed in section III.F.5. Because DOE proposes to test a ballast using only one lamp type, however, new lamps without ANSI standards will not affect the test procedure. The test procedure indicates using currently-available and ANSI-specified lamps for the measurement and calculation of ballast factor.

While NEMA commented that BE is the best descriptor for instant-start energy efficiency measurements, NEMA also stated that electrode heating effects should be taken into account for rapid-start and programmed-start systems (NEMA, Public Meeting Transcript, No. 9 at pp. 37–39). The use of electrode heating impacts the ratio of ballast input power to power dissipated in the lamp arc. Unlike instant-start ballasts, programmed-start and rapid-start ballasts use a portion of the ballast input power to heat the electrodes. Ion bombardment at the electrode (known as sputtering) during the voltage pulse deteriorates the lamp electrode over time. Electrode heating reduces the magnitude of the voltage pulse required to start a lamp, thereby increasing lamp lifetime for applications that require frequent on and off switching. Because the resistor-based BE test method measures only the power across the lamp arc resistor, measured output power (lamp arc power) for ballasts such as rapid-start and some

programmed-start ballasts tends to be smaller than the true total ballast output power. Instant-start ballasts are less affected by this issue because these ballasts do not employ electrode heating. From a lighting efficiency perspective, the BE metric captures the percentage of input power utilized for lighting in the output stage. DOE believes accounting for output power in this way is useful because it does indicate that instant-start ballasts use a greater percentage of input power in the direct production of light. The fluorescent lamp ballast standards rulemaking will consider the impact of starting method on consumer utility and will set energy conservation standards accordingly.

DOE investigated the possibility of measuring the total output power of a ballast for the BE metric to include electrode heating and lamp arc power. To measure the total output power across the entire resistor load bank, a user needs to measure the electrode and lamp arc voltage separately. DOE found this measurement to introduce too much error through capacitance to ground and loading effects on the ballast during high-frequency operation. Accordingly, DOE has tentatively concluded that reducing the number of measurements to ensure a more accurate measurement is the more reasonable approach. Therefore, DOE proposes measuring the voltage drop across the lamp arc resistor and the input current to the resistor load bank to calculate output power for the ballast efficiency metric.

GE commented that ballast manufacturers do not have control over the performance of a lamp or the measurement variation associated with the usage of reference lamps in the existing test procedure. GE noted that the resistor-based BE metric allows ballast designers to meet a specification that is independent of lamp variation. (GE, Public Meeting Transcript, No. 9 at p. 43) DOE understands that ballast designers would prefer ballast energy efficiency to be measured independently from a lamp. DOE agrees that measured BEF is subject to variations in measured lamp wattage and intends to reduce this source of variation. Today's proposed test procedure reduces the effect of reference lamp variation on variation in BEF.

DOE also believes that industry is starting to adopt BE method. NEMA has already initiated the usage of BE in its Premium Ballast Program, where BE is used in an alternative verification procedure. NEMA invited DOE and other interested parties to participate in the investigation process of the BE metric. (NEMA, Public Meeting Transcript, No. 9 at p. 41, pp. 48–50, p. 53; NEMA, No. 11 at p. 3) In particular, NEMA indicated that it has been studying the measurement variation of ballast efficiency through ballast testing and wished to collaborate directly with DOE. NEMA went on to mention that lamp manufacturers as well as the technical coordinators for ANSI C82.11 and the ANSI C82.11 Annex are involved and that lamp manufacturers are aware of the BE effort and have not voiced any resistance to the concept. (NEMA, Public Meeting Transcript, No. 9 at pp. 23–25, p. 42, p. 45, p. 48, pp. 54–55) ASAP stated that DOE's participation could speed the metrics replacement process and that the presence of non-industry experts would increase ASAP's confidence in the new metric. (ASAP, Public Meeting Transcript, No. 9 at p. 47, p. 49)

DOE participated in the NEMA task force on ballast efficiency by taking part in conference calls, providing technical expertise, and participating in ballast testing. NEMA measured ballast efficiency using the resistor-based BE method through a round robin activity (involving multiple ballast manufacturers and independent test labs) for ballasts that operate 32W, 4-foot medium bipin T8 lamps. Using these data, the task force honed the details of the test method and examined the level of variation present in the data. DOE's involvement with the NEMA task force was for the purpose of participating in round robin testing. Once testing was complete, DOE finalized development of today's proposed test procedure.

DOE believes the resistor-based ballast efficiency method reduces measurement variation, in comparison to the existing test method, to a greater extent than RSE or the improved light-output-based test procedure. DOE prefers a test procedure with reduced variation as it will allow for more precise standard setting and certification, compliance, and enforcement testing. DOE invites comment on the effectiveness of the resistor-based BE test method and its expected improvement in measurement variation.

2. Lamp-Based Ballast Efficiency Correlated to Ballast Efficacy Factor

As an alternative to the resistor-based ballast efficiency method (with results correlated through transfer equations to BEF) discussed in the previous section, DOE also considered using a similar method using a lamp (rather than a resistor load bank) as the ballast load. This arrangement has several potential advantages over today's proposed method. As ballasts are designed to operate lamps, not resistors, testing the efficiency of a ballast while operating a lamp may provide for a more accurate representation of power consumption and efficiency than when operating a resistor. For example, a lamp is a dynamic load which changes impedance in response to being operated at different powers. In order to account for this effect using the resistor-based ballast efficiency method, DOE proposes using separate resistors for different bins of ballast factor (as discussed in section III.F.5). Using a lamp load to test ballast efficiency, would allow manufacturers to use a single lamp to act as the appropriate load for ballasts of all ballast factors. Also, as discussed in section III.F.8, DOE found that several ballasts are incompatible with the resistor-based method of testing ballast efficiency. In order to provide a viable test procedure for these ballasts, DOE proposes that manufacturers use the light output-based test to measure BEF directly. Using lamp-based ballast efficiency method could maintain a consistent testing procedure across these ballast types. Below is a brief summary of the lamp-based ballast efficiency (correlated to ballast efficacy factor) test method.

Similar to the resistor-based ballast efficiency method, in the lamp-based ballast efficiency method, input and output power measurements would be simultaneously taken by the technician while the ballast is operating a lamp (specified by the test procedure). To calculate ballast efficiency, the technician would divide the measured output power by the measured input power. More specifically, a lamp would be seasoned at least 12 hours prior to testing to ensure stable electrical characteristics. The lamp and ballast pairing would be selected based on DOE's determination of the most common wattage lamp a ballast operates and the maximum number of lamps a ballast is designed to operate. The lamp or lamps, selected for consistency with the specifications in ANSI C78.81–2005, would be mounted in a standard strip fixture according to ANSI C82.1–2004 and ANSI C78.81–2005. Ballast and output power would be measured using a suitable power analyzer and current probe. DOE would consider the same specifications as proposed the resistor-based method as follows.

Instrumentation for current, voltage, and power measurements would be selected in accordance with ANSI C78.375–1997 Section 9, which specifies that instruments should be "of the true RMS type, essentially free from wave form

errors, and suitable for the frequency of operation." Instrument performance could be further specified within the guidelines of the ANSI C78.375–1997 and ANSI C82.2–2002. Specifically, current would be measured using a galvanically isolated current probe/monitor with frequency response between 40 Hertz (Hz) and 20 MHz. In addition, voltage would be measured directly by a power analyzer with a maximum 100 picofarad (pF) capacitance to ground and have frequency response between 40 Hz and 1 MHz.

Once the ballast is connected to the lamp and fixture, the ballast would be energized at its highest rated input voltage and the lamp and ballast system would be stabilized for up to one hour (at least fifteen minutes) as determined in ANSI C78.375–1997. Within one hour of energizing the ballast and after the lamp and ballast system have stabilized, the technician would record the input power and sum of the output powers measured for each lamp. The technician would then divide the total output power by the input power to yield BE. Finally, if DOE were to adopt the lamp-based BE method, similar to the resistor-based BE method, DOE would establish correlation relationships between BE and BEF.

While DOE recognizes the several advantages to the lamp-based BE method (discussed earlier), DOE tentatively believes that testing for BE using resistor load instead of a lamp load would result in reduced measurement variation by eliminating lamp-to-lamp variability. At this time, DOE does not have test data to support the validity of the lamp-based BE method or for the generation of appropriate transfer equations to correlate lamp-based BE to BEF. DOE requests additional information on this alternative lamp-based BE method, including repeatability and reproducibility statistics and test data. DOE also invites comment on the burden that the lamp-based BE method imposes for testing.

3. Improvements to Existing Test Procedure

As an alternative to the ballast efficiency methods (with results correlated through transfer equations to BEF), DOE considered modifying certain aspects of the existing test procedure. DOE believes that some of the measurement variation inherent in the existing test procedure can be reduced without making fundamental changes. The measurement variation in BEF can be attributed to operating conditions, electrode heating in the reference circuit, variation in measured power of reference lamps, inconsistent output power measurements in determining ballast factor, and ambient temperature. DOE investigated methods for improving the requirements governing these specifications.

The Illuminating Engineering Society of North America (IESNA) Lighting Measurements Testing & Calculation Guide (LM) IESNA LM–9–1999 describes several options for operating a reference lamp. DOE believes that the industry is not uniform in its selection of operating conditions, which results in potential for varied BEF measurements. Under Electrical Settings (section 8.0), IESNA LM–9–1999 states "measurements may be taken with the lamp operating and stabilized at the specified input volts to the reference circuit or, alternatively, measurements may be taken with the lamp stabilized, at the rated lamp power or at a specified current." These different operating conditions can lead to varying reference ballast light outputs for the calculation of ballast factor. For example, if the reference ballast operates the reference lamp such that it produces less light, the ballast factor and BEF of the test ballast will increase. If ballast operators run the reference circuit only at the specified input voltage to the reference circuit, DOE believes the test procedure will be more reproducible between test facilities because only a single operating condition will be permitted. DOE believes using the specified input voltage to the reference circuit is the best option because it is the most common operating condition used by industry and simplest to execute. DOE also notes that the most recent test procedure final rule for general service fluorescent lamps also specifies testing lamps at a constant and specified input voltage. 74 FR 31829, 31834 (July 6, 2009).

The existing ballast test procedure is unclear as to whether electrode heating should be used in the reference circuit. Electrode heating is known to increase the efficiency of a lamp, which means the same amount of input power produces more light. Compared to a reference circuit that employs electrode heating, the ballast factor of the test ballast tends to be larger if the reference circuit does not use electrode heating. An issue arises when instant-start ballasts (no electrode heating) are compared to a reference circuit that uses electrode heating. The additional lamp efficiency in the reference circuit decreases the ballast factor and BEF for an instant-start ballast compared to a test method that uses no electrode heating in the reference circuit. Although DOE acknowledges the effect on BEF due to electrode heating in the reference circuit for instant-start test ballasts, it notes there are no industry supported standards defining reference circuit operating conditions for medium bipin, miniature-bipin, and recessed double contact lamps without electrode heating. These lamps are specified in ANSI standards according to operation with reference ballasts using electrode heating, but instant-start, rapid-start, or programmed-start ballasts can operate these lamps. One cannot simply remove electrode heating from the circuit, as it would alter the way the ballast operates the lamp. Without industry standards, DOE is unable to quantify the effect new operating conditions might have on ballast factor. DOE expects the effect on BEF as a result of increased of lamp efficiency in the reference circuit to be relatively small and consistent among all instant-start ballasts such that no particular product is affected to a greater or lesser extent than any other product. DOE believes that requiring electrode heating in the reference circuit for all ballasts that operate medium bipin, miniature-bipin, and recessed double contact lamps would limit potential variation between test facilities.

The existing test procedure specifies that the reference lamp electrical characteristics must not vary more than 2.5 percent from the specifications in the ANSI C78 Series (1972 Edition and 1975 Supplement) for fluorescent lamp electrical characteristics. While this spread in operating conditions is less than the general requirements for the manufacturing of fluorescent lamps, it still leads to much of the variation in ballast input power and BEF. Tightening the tolerance on lamp electrical characteristics to ± 1 percent of the specifications found in the ANSI C78 Series (1972 Edition and 1975 Supplement) would decrease measurement variation due to variability in measured lamp power. DOE believes this change alone could result in a large reduction in measurement variation.

Decreasing the tolerance for ambient temperature would also reduce measurement variation. Differences in ambient temperature change the effective load a lamp places on a ballast which affects BEF through changes in the input power measurement. DOE found that changes in ambient temperature as small as 1 °C resulted in changes in BEF as large as 1.5 percent. DOE believes limiting ambient temperature to 25 °C ± 0.5 °C would reduce the measurement variation of BEF.

In response to the fluorescent lamp ballast standards rulemaking framework document, DOE also received several comments related to the ANSI standard referenced by the current fluorescent lamp ballast test procedure. In written and verbal comments, NEMA acknowledged that ANSI C82.2–1984 cited in the current fluorescent lamp ballast test procedure is intended only for low-frequency ballasts and, thus, can be confusing for technicians attempting to test high-frequency electronic ballasts. NEMA indicated that ANSI is creating an update of ANSI C82.11–2002 and the associated C82.11–2002 Annex (collectively known as ANSI C82.11 Consolidated-2002 [13]) that specifies an appropriate measurement method for high-frequency electronic ballasts. (NEMA, Public Meeting Transcript, No. 9 at pp. 71–73; NEMA, No. 11 at p. 2)

DOE agrees that the ANSI C82.2–1984 cited in the current test procedure may be confusing for high-frequency ballast operation. Thus, DOE believes updating ANSI C82.2–1984 to ANSI C82.2–2002 [14] and indicating the use of ANSI C82.11–2002 and ANSI C82.11 Annex would improve the clarity of the electronic ballast test method. DOE believes these changes would reduce measurement inconsistencies but not affect the measured energy efficiency of the ballast. Specifically, DOE believes the input power measurement of ANSI C82.2–2002 reduces the interference of instrumentation on the input power measurement as compared to ANSI C82.2–1984. DOE also believes, however, that because modern instrumentation does not significantly interfere with input power measurements, the differences between the input power measurements of the two test procedures are negligible. DOE believes ANSI C82.2–2002 should be used as the guide for measurement for both high- and low-frequency ballasts. For ballast operating conditions, DOE believes ANSI C82.1–2004 should be used for low-frequency (60 Hz) ballasts and ANSI C82.11 Consolidated-2002 for high-frequency ballasts. As discussed later in section III.F.9, while DOE is proposing to adopt the resistor-based BE test method for compliance with any future amended standards (using transfer equations so BEF values can be reported), DOE also proposes updating the ANSI C82.2–1984 reference in the existing test procedure for purposes of compliance with the existing standards. DOE invites comment on this issue.

In the existing test procedure, ballast factor can be calculated either as a ratio of test and reference circuit light output or as a ratio of measured lamp power. Requiring light output measurements to be used for all starting methods in the calculation of ballast factor should reduce measurement variation and increase the consistency and comparability of results. In instant-start systems, power measurements are possible because fewer measurements are required to measure lamp power. For programmed-start and rapid-start ballasts, two wires attach to each end of the lamp, requiring additional voltage and current measurements compared to the instant-start system. During high-frequency operation, these extra measurements make it difficult to accurately capture lamp power due to capacitance and loading effects on the ballast. For this reason, light output measurements are used for rapid-start and programmed-start ballasts for the measurement of ballast factor. Although the existing test procedure indicates the usage of power measurements for instant-start ballasts, industry practice has been to use light output measurements for all starting methods. DOE believes the use of light output for the measurement of ballast factor for all ballast types would render the values of BF more consistent between testing facilities.

Many ballasts are capable of operating lamps with different lamp wattages. For example, a ballast designed to operate two four-foot 32W medium bipin (MBP) T8 lamps can also operate two 30W, 28W, or 25W lamps. The BEF will vary based on the rated wattage of the lamp operated by the ballast. When a ballast operates a lamp with a lower rated wattage, BEF tends to increase due to reduced ballast input power. In an improved light-output-based test procedure, DOE would specify particular lamp-and-ballast combinations for testing such that a ballast is only tested while operating one specific load. DOE believes this method would mitigate testing burden on manufacturers, provide a representative measurement of ballast energy consumption, and make the test procedure more flexible to new lamp-and-ballast combinations. *See* section III.F.2 for additional detail on using one lamp (resistor) and ballast combination for testing.

To test every lamp-and-ballast combination, manufacturers would need to purchase and maintain the requisite number of reference lamps (or in the case of the resistor-based BE method, resistors) for every lamp wattage that a ballast can operate. In the example mentioned above, this would require six lamps (or resistors) in addition to the two required for the 32W lamp. For ballasts that operate more than two lamps, the impact on manufacturers is more significant. Furthermore, ANSI standards do not exist for every reduced wattage lamp. Because industry has not reached a consensus regarding the performance characteristics of each lamp, DOE did not choose a resistor to represent those lamps for which an industry standard does not exist. Thus, to mitigate the testing burden on manufacturers, in the fluorescent lamp ballast standards rulemaking, DOE is considering setting standards based on the ballast operating the most common lamp wattage. Consequently, the test procedure only requires one lamp-and-ballast combination to be tested in each product class. *See* section III.F.2 for additional discussion on why DOE believes testing a ballast while operating one representative load is a reasonable means of determining the efficiency of a ballast.

Similar to lamp wattage, ballasts are designed to operate a certain maximum number of lamps. Many ballasts can operate fewer than the maximum number of lamps. As discussed in section III.F.2, DOE found testing a ballast on all its possible loads (possible numbers of lamps) was unnecessary. DOE believes requiring testing of fluorescent lamps ballasts while operating the maximum number of lamps for which the ballast is designed would reduce testing burden on manufacturers and produce representative energy consumption measurements. Therefore, this test procedure would not require testing of ballasts with every possible number of lamps it can operate.

Some ballasts are also capable of operating at multiple input voltages (universal voltage ballasts). The existing energy conservation standards require ballasts to be tested at both 120 V and 277 V, which increases the testing burden on manufacturers. The Joint Comment suggested testing these multi-voltage ballasts at 277 V for commercial ballasts and 120 V for residential ballasts. (Joint Comment, No. 12 at p. 5) DOE believes that 277 V is the most common input voltage for commercial ballasts and that 120 V is the most common for residential ballasts. Therefore, DOE agrees with the Joint Comment and has tentatively concluded that a revised light-output-based test procedure should test all universal voltage commercial ballasts at 277 V and universal voltage residential

[13] American National Standards for Lamp Ballasts—High Frequency Lamp Ballasts—Supplements," approved January 17, 2002.

[14] "American National Standards for Lamp Ballasts—Method of Measurement of Fluorescent Lamp Ballasts," approved June 6, 2002.

ballasts at 120 V.[15] Ballasts capable of operating only at a single voltage would be tested at the rated ballast input voltage.

DOE believes the aforementioned improvements to the existing test procedure would decrease measurement variation. Furthermore, DOE does not believe the changes would result in significantly increased testing burden for manufacturers. DOE believes, however, that the proposed resistor-based BE method reduces measurement variation to a greater extent than the improved light-output-based test procedure while also imposing only a nominal increase in testing burden. DOE invites comment on the effectiveness of the improved light-output-based test procedure to reduce measurement variation and on the burden it imposes for testing.

4. Relative System Efficacy

DOE considered the RSE metric as another alternative to the existing BEF test procedure. The RSE metric is intended to normalize the existing metric of BEF to rated lamp efficacy to make it more comparable across ballasts operating different numbers of lamps and different lamp wattages. DOE received comments suggesting use of the RSE metric in response to the framework document for the fluorescent lamp ballast standards rulemaking.

NEMA, NYSERDA, and the Joint Comment recommended the investigation of RSE as a potential replacement for the BEF metric. According to comments, the relative system efficacy metric would allow comparisons to be made across different ballast types, thereby enabling the usage of fewer product classes in the energy conservation standard. (NYSERDA, Public Meeting Transcript, No. 9 at pp. 27–28, p. 75; NEMA, Public Meeting Transcript, No. 9 at p. 100; Joint Comment, No. 12 at pp. 6–7)

Relative system efficacy is equal to BEF divided by 100 and multiplied by total rated lamp power. RSE provides a greater range of comparability among ballast types in comparison to BEF. Because RSE is based on the BEF metric, it creates minimal incremental testing burden over the existing test procedure. RSE allows for improved comparison among ballasts designed to operate different number of lamp systems and ballasts designed to operate different lamp wattages. Lamp and ballast systems operating more lamps or higher-rated-wattage lamps tend to have lower BEF values. When these lower BEF values are multiplied by correspondingly larger total-rated-lamp powers, the resulting value is more comparable across different product classes.

NEMA stated that it is attempting to correlate the BE and RSE metrics to the existing BEF metric. NEMA also stated that the RSE metric is likely to be more closely correlated to BE than the BEF metric is to BE. (NEMA, Public Meeting Transcript, No. 9 at p. 28, p. 33) DOE believes NEMA may be correct in its prediction that RSE is more closely correlated to BE than BEF to BE. However, DOE proposes the use of transfer equations to convert BE values to BEF for consistency with use of the BEF metric in 42 U.S.C. 6295(g)(5) and (g)(8). Therefore, DOE did not consider correlating RSE to BE as an option for this proposed test procedure.

Although the RSE metric improves on the BEF metric through increased comparability between product classes with minimal incremental burden, DOE believes RSE would ultimately have the same measurement uncertainty associated with the existing test procedure or the improved light-output based test procedure. In particular, because RSE includes the usage of reference lamps in test measurements, RSE is based on the same varied inputs as BEF. This rulemaking's test procedure revision is intended to reduce measurement variation, and DOE believes the proposed resistor-based BE method reduces measurement variation to a greater extent than RSE. DOE invites comment on its tentative decision not to adopt RSE as a potential test method.

F. Proposed Test Procedure

In consideration of the comments and analysis discussed above, today's proposed test procedure for measuring active mode power consumption is the resistor-based BE method, with results correlated to BEF through the use of transfer equations. This method consists of the following steps: (1) Measurement of input power to the ballast; (2) measurement of simulated lamp arc power to estimate ballast output power; and (3) correlation of the ballast efficiency metric to BEF. DOE believes the resistor-based BE method results in the largest reduction in measurement variation over the existing test procedure. Interested parties are invited to comment on the proposed resistor-based ballast efficiency method, the lamp-based ballast efficiency method, the improvements to the BEF method, and the RSE method described in section III.E, or on any other procedures they believe would be appropriate.

In the sections 1 through 8 that follow, DOE discusses the language proposed for a new appendix Q1 to subpart B of 10 CFR part 430 (hereafter "appendix Q1"). The new appendix Q1 will contain the new test procedure that correlates measured BE to BEF that will be used for the purposes of compliance with future amended standards. Section 9 describes an update to the existing test procedure in appendix Q to subpart B of 10 CFR part 430. The change to appendix Q updates an industry reference from ANSI C82.2–1984 to the current ANSI C82.2–2002. DOE proposes to create a separate appendix Q1 for the proposed new test procedure. DOE will retain the existing BEF test procedure for compliance with existing standards and, once amended standards become effective, for use with ballasts that cannot operate resistors. Section 10 discusses amendments DOE is proposing regarding references to ANSI C82.2–2002.

1. Test Conditions

DOE proposes that prior to measurement, the ballasts would be thermally conditioned at room temperature (25 °C ± 2 °C) for at least 4 hours. During this conditioning period, ballasts are not operating or energized. Providing time for thermal conditioning helps to generate reproducible results as electrical products' performance characteristics tend to change in response to temperature.

In addition, DOE proposes that ballasts be tested using the electrical supply characteristics found in section 4 of ANSI C82.2–2002 with the following changes: (1) Ballasts capable of operating at a single voltage would be tested at the rated ballast input voltage; (2) users of universal voltage ballasts would disregard the input voltage directions in section 4.1 of ANSI C82.2–2002 that indicate a ballast capable of operating at multiple voltages should be tested at both the lowest and highest USA design center voltage; and (3) manufacturers use the most recent revisions to the normative references associated with ANSI C82.2–2002. Instead of testing universal voltage ballasts at the voltages indicated in ANSI C82.2–2002, DOE believes that testing ballasts at a single voltage is more appropriate and less burdensome. DOE believes 277 V is the most common input voltage for commercial ballasts and that 120 V is the most common for residential ballasts. Therefore, DOE proposes that all universal voltage commercial ballasts be tested at 277 V

[15] ANSI C82.77–2002 specifies commercial ballasts must have a power factor greater than 0.9, while residential fluorescent ballasts (with an input power below 120 W) must have a power factor of 0.5 or greater. Residential ballasts are designed and labeled for use in residential applications.

and that universal voltage residential ballasts be tested at 120 V.

2. Test Setup

The resistor load bank is a network of resistors used to model the load placed on a ballast by a fluorescent lamp. It consists of five resistors, two for each of the two electrodes and one for the lamp arc. In a lamp, current can arc from one electrode to the other from any two positions (known as hotspots) on the lamp electrodes. The position can be different each time the current flow alternates from one direction to the other. The exact position determines the effective resistance of the electrode by determining the distance through which current must travel in the electrode. If the hotspots are at the ends of the electrodes for an instant-start system, the total electrode resistance will be greater than if the hotspots are both at the center of the electrode. When the arc begins at the center of the electrode, the length of the resistor is divided in half, creating a circuit with two equivalent resistors in parallel. The hotspots' positions change over time, but the design of the resistor load bank is limited to one fixed position. Therefore, DOE needed to select a position for the hotspot, and model the resistor load bank accordingly.

The selection of the hotspot position was based largely on the design of rapid-start and programmed-start ballasts because the position of the hotspot impacts the measured value of BE. These ballasts use two wires to carry ballast output power to the lamp. One of these wires supplies power for electrode heating, while the other provides power for the lamp arc. Electrode heating requires significantly less power than the lamp arc, so different levels of current and voltage exist in the two ballast wires leading to the lamp. Because these two wires are not labeled by the respective loads they serve, the user does not know which wire is which. With two different resistors, depending on which wire was attached to the larger or smaller resistor, the circuit would display two different output powers. Therefore, DOE modeled a lamp with the hotspot in the middle of the electrode so that the resistance of each path would be equal. Section III.F.7 describes how DOE determined resistor values for each type of lamp.

DOE proposes that the ballast be connected to a main power source and to the resistor load bank according to the ballast manufacturer's wiring instructions. Where the wiring diagram indicates connecting the ballast wire to a lamp, the lead would be connected to a resistor load bank. Ballast wire lengths would be unaltered from the lengths supplied by the ballast manufacturer to accurately capture the ballast efficiency of the product in its original manufactured form. Wires running from the load bank to the power analyzer would be kept loose or unbundled and at a minimal working length, to reduce error introduced to the ballast circuit because of current bypassing the ballast.

DOE also proposes that the ballast be connected to the resistor load bank associated with the most common wattage lamp the ballast is designed to operate. In many cases, a ballast can operate several reduced wattage lamps in addition to the most common variety. For example, ballasts designed to operate four-foot MBP T8 lamps can operate 32 W, 30 W, 28 W, and 25 W lamps. Because ballasts operate differently when connected to different loads, a single resistor load bank is unable to simulate the load induced by all lamp wattages. To test every lamp-and-ballast combination, manufacturers would need to purchase and maintain the requisite number of reference lamps (or in the case of the proposed method, resistors and lamps) for every lamp wattage that a ballast can operate. Maintaining this number of lamps and resistors would impose a significant burden on manufacturers. Additionally, ANSI standards do not exist for every reduced wattage lamp. Because industry has not reached a consensus regarding the performance characteristics of each lamp, DOE could not choose a resistor to represent those lamps for which an industry standard does not exist. Thus, to mitigate the testing burden on manufacturers, the proposed test procedure would only require one lamp-and-ballast combination to be tested in each product class. Therefore, DOE proposes a test procedure based on the ballast operating the most common lamp wattage, resulting in a ballast efficiency that represents the way the product is primarily used in the market and reducing the testing burden on manufacturers.

DOE proposes to test fluorescent lamp ballasts operating the maximum number of lamps for which they are designed. Many ballasts can operate fewer than the maximum number of lamps they are designed to operate. DOE compared the BEF of a ballast operating the maximum number of lamps for which it was designed to a ballast operating the same number of lamps but which was designed to operate more lamps. For example, a 4-lamp ballast operating two lamps has a similar efficiency to a 2-lamp ballast operating two lamps. When operating the same number of lamps, DOE found no correlation between the ballasts capable of operating different maximum numbers of lamps and BEF. Therefore, today's proposed test procedure requires testing of a ballast only while it is operating the number of resistor load banks equal to the maximum number of lamps for which it was designed.

In response to the framework document for the fluorescent lamp ballast standards rulemaking, the Joint Comment stated that DOE should establish performance requirements at specific dimming levels (such as 100, 75, 50, and 25 percent) such that dimming ballasts can be consistently compared. (Joint Comment, No. 12 at p. 5) DOE agrees that a test procedure for dimming ballasts should specify the dimming level or levels at which ballast efficiency should be tested. The preliminary determination of the scope of coverage in the fluorescent lamp ballast standards rulemaking, however, does not include dimming ballasts because these ballasts have an overall market share of about one percent and are already used in energy-saving systems. Thus, DOE did not include them in the preliminary scope of coverage. If DOE determines in the fluorescent lamp ballast standards rulemaking that the scope of coverage should include dimming ballasts, DOE will develop a test procedure for these ballasts. DOE invites comment on potential methods of measurement for determining the efficiency of dimming ballasts in the event dimming ballasts are added to the scope of coverage in the ongoing fluorescent lamp ballast standards rulemaking.

Ballast wiring is different depending on starting method. Instant-start ballasts have only one wire connecting the ballast to each end of the load, while rapid-start and programmed-start ballasts have two wires connected to each end. The second wire in rapid-start and programmed-start systems is used for electrode heating. The resistor load banks have two input wires connected to two electrode resistors. In this test procedure, DOE proposes that the single output wire on an instant-start ballast be shorted with the two input electrode resistors to be consistent with current industry practice. DOE notes that this circuit topology is consistent with the wiring of lamp-and-ballast systems for bipin lamps. For example, a four-foot 32 W MBP T8 lamp has two pins that are shorted together with the ballast output wire using a jumper wire or an adapter. A programmed-start ballast would not need to be shorted together because the ballast uses two wires for ballast output between the ballast and the lamp.

DOE proposes that the power analyzer voltage leads be attached to the wires leading to and from the main power source for input voltage measurements and that the current probe be placed around the same wires for input current. The power analyzer should have at least one channel per lamp plus one additional channel for the ballast input power measurement.

Figure 1 shows the instrumentation placement for the output power measurement for ballasts that operate MBP, recessed double contact (RDC), and miniature-bipin (miniBP) lamps and Figure 2 shows placement for ballasts that operate single pin (SP) lamps.

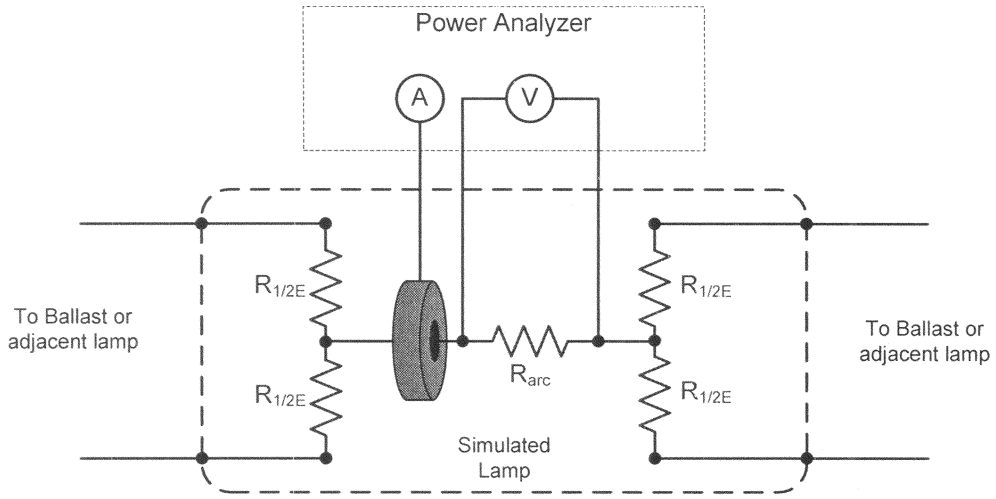

Figure 1. Instrumentation Placement for Ballasts that Operate MBP, RDC, and MiniBP Lamps

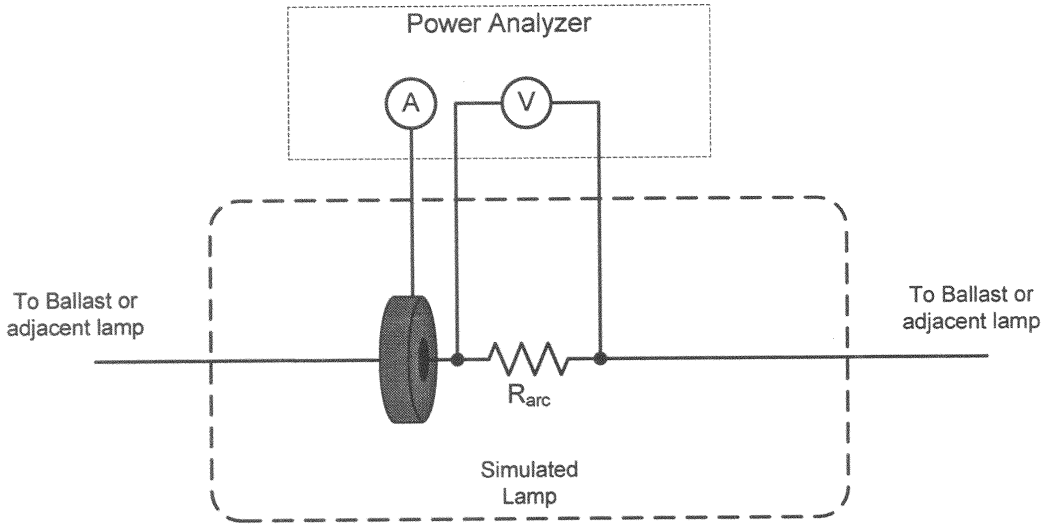

Figure 2. Instrumentation Placement for Ballasts that Operate SP Lamps

3. Test Method

ANSI C82.2–2002 specifies operating the reference lamp with the test ballast for less than 30 seconds to reduce the effect of lamp restabilization on light output and to give the ballast less time to increase in temperature. Following the protocol established in ANSI C82.2–2002, a lamp is first stabilized on a reference ballast and then transferred to a test ballast without being extinguished. The output of a fluorescent lamp remains relatively constant (steady-state) when operated under defined conditions. When these defined conditions change (*e.g.,* switching from a reference ballast to a test ballast) the lamp output

characteristics also change. This change is not immediate, so by limiting the time the test ballast is driving the reference lamp, the reference lamp is kept as close as possible to its reference conditions. In addition, as a ballast operates, it increases in temperature until it reaches steady-state, though it may take more than thirty minutes for a ballast to increase from room temperature to steady-state temperature. Limiting test ballast operation to thirty seconds limits the increase in ballast temperature. DOE believes that over the course of thirty seconds, the change in lamp operating characteristics has a more significant impact on light output than changes in ballast temperature.

For the proposed resistor-based test procedure, DOE found that one minute of operation was required to provide sufficient time to prepare for the data capture while maintaining the ballast and resistor load bank near room temperature. DOE recognizes that it is extending the time of operation compared to the procedures outlined in ANSI C82.2–2002, but it does not believe the additional 30 seconds allow for a significant increase in temperature of the ballast or in the resistance of the resistor load bank. As previously stated, DOE believes the main driver in ANSI's decision to limit operation to 30 seconds was the change in lamp operating characteristics, not ballast temperature. DOE proposes that after one minute of data capture the ballast be switched off, so that the resistor load bank duty cycle not exceed 50 percent (that is, for every operational minute, the load should be rested for one minute) to minimize any issue with thermal drift of the resistor load bank. Thermal drift describes the phenomenon of a resistor exhibiting a different resistance in response to a change in its internal temperature. DOE believes that operating a resistor load bank for one minute followed by one minute of zero power will sufficiently reduce the opportunity for the resistor load bank deviate from its room temperature resistance rating.

During data acquisition, the power analyzer should measure the input voltage and current and the output voltage and current according to the setup described in section III.F.2. DOE proposes that the measured input parameters be voltage (RMS [16]), current (RMS), power, and power factor measured in accordance with ANSI C82.2–2002. The measured output parameters would include lamp arc resistor voltage, current, and power. Instrumentation for current, voltage, and power measurements would be selected in accordance with ANSI C78.375–1997 [17] Section 9, which specifies that instruments should be "of the true RMS type, essentially free from wave form errors, and suitable for the frequency of operation." DOE proposes to further specify instrument performance within the guidelines of the ANSI C78.375–1997 and ANSI C82.2–2002. Specifically, current would be measured using a galvanically isolated current probe/monitor with frequency response between 40 Hertz (Hz) and 20 MHz. In addition, voltage would be measured directly by a power analyzer with a maximum 100 picofarad (pF) capacitance to ground and have frequency response between 40 Hz and 1 MHz.

In addition to making electrical input and output measurements, today's proposed test procedure would also require measurement of ballast factor for the conversion to BEF. As discussed in the ballast factor section of III.F.5, ballast factor affects the apparent load placed on a ballast by a lamp, and consequently the measured BEF. BF helps assign a ballast to a particular product class, and it must be determined empirically. DOE proposes that ballast factor be measured in accordance with ANSI C82.2–2002 section 12, with a few modifications. Because the measurement of ballast factor requires a reference lamp, DOE proposes to adopt some of the improvements to the existing test procedure described in section III.E.3. DOE believes specifying particular electrical operating conditions, clarifying in which circumstances electrode heating should be used in the reference circuit, and using light output measurements instead of power measurements for all ballasts will reduce variation in the measurement of BF. These changes are discussed in greater detail below.

First, DOE notes that there are several options for operating a reference lamp as described in IESNA LM–9–1999. As described in section III.E.3, DOE proposes operating the reference lamp at the specified input voltage to the reference circuit. This method is the simplest to execute and the most common practice in industry. In addition, DOE adopted this method in the test procedure final rule for general service fluorescent lamps. 74 FR 31829, 31834 (July 6, 2009). Second, the existing ballast test procedure is unclear on whether electrode heating should be used in the reference circuit for all ballasts. As described in section III.E.3, the presence or absence of electrode heating in the reference circuit changes the light output of the reference lamp on the reference circuit, thereby changing the measured value of BF. DOE proposes that electrode heating be used in the reference circuit for all ballasts that operate bipin or recessed double contact lamps (MBP, mini-BP, RDC). Single-pin lamps should not use heating in the reference circuit because these ballasts are not capable of undergoing electrode heating and are designed for use with instant-start ballasts. Third, although the existing test procedure requires the usage of power measurements for instant-start ballasts, industry practice has been to use light output measurements for all starting methods. DOE proposes the use of light output for the measurement of ballast factor for all ballast types to make the values of BF more consistent.

In addition, because DOE is considering establishing a ballast efficiency (correlated to BEF) test procedure based on operation of a lamp at the most common wattage, DOE proposes that ballast factor also be measured using the most common wattage lamp. Ballast factor should be measured using a reference lamp with the nominal wattage indicated in section III.F.7 for a given ballast type. This nominal wattage also represents the type of lamp the resistor load bank simulates. Testing each ballast with only the most common wattage lamp produces test results that are most representative of how the end users operate fluorescent lamp ballasts.

DOE does not believe that the usage of reference lamps for the purpose of ballast factor determination creates significant measurement variation. DOE believes that variations in measured lamp power affect ballast input power to a much greater extent than ballast factor. DOE invites comment on the variation of ballast factor due to lamp manufacturing variations and its effect on the measurement variation of BE converted to BEF.

4. Calculations

As described in Equation 1 below, ballast efficiency is equal to output power divided by input power.

$$BE = \frac{\text{Output Power}}{\text{Input Power}}$$

DOE proposes to relate ballast efficacy factor to the measured ballast efficiency

[16] Root mean square (RMS) voltage is a statistical measure of the magnitude of a voltage signal. RMS voltage is equal to the square root of the mean of all squared instantaneous voltages over one complete cycle of the voltage signal.

[17] "American National Standard for Fluorescent Lamps—Guide for Electrical Measurements," approved September 25, 1997.

through the empirically derived transfer equations discussed in section III.F.5.

5. Transfer Equations—General Method

A system of transfer equations is needed for correlating BE to BEF consistent with 42 U.S.C. 6295(g). DOE determined the transfer equations empirically by testing ballasts using both the proposed resistor-based BE and existing BEF test methods. DOE then plotted the results and computed a linear regression to generate an equation for BEF as a function of BE.

The existing test procedure for fluorescent lamp ballasts allows for ballasts to operate the reference lamps under multiple operating modes. The user may operate at constant lamp current, voltage, or power. DOE used constant input voltage to the reference circuits for all of its BEF measurements and for lamp resistor determination. DOE believes this to be the most common industry practice. Therefore, the transfer equations that convert BE to BEF reflect this decision.

Because factors like number of lamps, ballast factor, starting method, and lamp diameter affect the correlation between BE and BEF, DOE considered individual transfer equations for each product class proposed in the fluorescent lamp ballast standards rulemaking. The following paragraphs discuss each of the factors considered in the transfer equation development process. DOE invites comment on the transfer equations.

Number of Lamps

The number of lamps operated by a ballast has a disparate effect on the BE and BEF metrics. BEF decreases for ballasts operating increased number of lamps. This is because ballast input power increases (denominator) but the ballast factor (numerator) does not necessarily change. In contrast, BE changes much less with varying numbers of lamps because the numerator and denominator change by roughly proportional amounts. Therefore, DOE parsed the data into groupings based on the number of lamps the ballast operates. Within these groupings, DOE plotted BE versus BEF and computed a linear regression to generate an equation for BEF as a function of BE.

Ballast Factor

For a given ballast type, ballast factor tends to increase with increased ballast input power. As ballast input power increases, so does the ballast output power and consequently the light output. When a lamp is running at a higher lamp current and power (representative of a ballast with a high BF), lamp impedance decreases and the apparent load the lamp places on the ballast decreases. Therefore, a high BF ballast operating a resistor that simulates normal BF loading will measure a higher BE than when running a load of the appropriate resistance. To account for this change in apparent load with a resistor load bank, DOE identified two options: (1) Modify resistor values to account for the change in apparent load due to lamp current and BF; or (2) conduct all testing with one resistor representing normal BF but develop separate transfer equations for three different ranges of ballast factors (called bins).[18]

For option one, DOE would need to determine resistor values for multiple ballast factors for each ballast type. By appropriately matching resistance to BF, the test procedure would more accurately model the change in apparent load as a function of ballast factor. This method would create an additional burden on DOE at the outset of the test procedure and an even more significant burden on manufacturers. For example, if in order to obtain measurable improvement in testing accuracy compared to option 2, DOE were to assign a separate resistor value to each ballast factor in the low ballast factor product class for 4-foot T8 MBP ballasts, DOE would need to specify four specific resistor values. Specification of multiple resistors based on ballast factor would require the manufacturer to purchase many more resistors than a test procedure that used one resistor for all ballast factors. To limit the impact on manufacturers, DOE could determine resistor values for two to three commonly used BFs per ballast type and establish bins around these ballast factors. Keeping the number of BF-specific resistor values to a minimum would decrease manufacturer burden but still be more burdensome than option 2 without offering any appreciable improvement in testing accuracy compared to option 2.

Option two specifies that ballasts of all BFs are tested using the same resistor value. Under this approach, ballasts designed with a ballast factor different than the ballast factor simulated by the resistor load bank would be operating a load that is non-representative of the effective load placed on the ballast by a real lamp. When testing ballasts of all ballast factors using one resistor, all else held constant, as BF increases, measured BE will tend to increase as well. Because the measured BE will not accurately describe lamp arc power divided by ballast input power, DOE would need to create a scaling technique. DOE can develop transfer equations for converting measured BE to BEF that correspond to bins of ballast factors. Transfer equations could be developed for particular ranges of BF so that DOE can define different relationships between measured BE and BEF for different BF bins. DOE proposes to use three bins because ballasts currently offered in the market are generally centered on three different ballast factors. DOE proposes this option because DOE believes it appropriately balances accurate scaling based on ballast factor with the reduced burden on manufacturers as a result of using one resistor for all ballast factors.

DOE notes that placing ballasts into three bins based on BF results in the measured efficiency of the ballasts with the lowest BF in a particular bin to be relatively smaller than the higher end of the BF bin. Low BF ballasts tend to measure a lower BE than a high BF ballast when operating the same resistor because of the effects of current on lamp impedance discussed previously. This could potentially encourage the industry to produce ballasts at the upper ends of these bins, as the associated energy conservation standard would be less stringent for the higher BF models. DOE invites comment on this issue.

DOE considered two mitigating strategies for reducing the market interference resulting from specifying a small number of BF bins. One possible solution to this problem is to increase the number of BF bins to reduce the range in BF within a bin. DOE was not able to assemble enough data based on the ballast factors currently offered in the market to increase the number of BF bins. The ballast market tends to clump around two to three popular ballast factors, rendering empirical determination of transfer equations for intermediate ballast factors infeasible. DOE also considered creating a continuous function of BE as a function of BF to normalize BE values for the deviation in measured BE as a result of running a ballast on unrepresentative resistive load. These normalized BE values would then be used as inputs to a single transfer equation developed from data obtained by testing ballasts with the ballast factor that the resistive load bank simulates. Similar to efforts to increase the number of BF bins, however, DOE found that the market provided insufficient data for scaling. With only two to three BFs in the data

[18] DOE proposes three ballast factor bins: low, normal, and high. Low-ballast factor ballasts have a ballast factor of 0.78 or less; ballasts designed with a ballast factor between 0.78 and 1.10 are normal-ballast factor; and high-ballast factor ballasts were defined to have a ballast factor of 1.10 or higher.

set, DOE could not be certain of the relationship between BF and measured BE.

Accordingly, based upon the above considerations, DOE has tentatively decided to proceed with option two by developing three transfer equations relating to three different ballasts factor bins. DOE tested ballasts of high-, normal-, and low-ballast factor varieties for each ballast type to develop an equation for BEF as a function of BE specific to the ballast factor type (high, normal, or low). DOE plotted BE and BEF data for a given BF bin (high-, normal-, or low-BF bins) and calculated a linear regression to determine an equation for BEF as a function of BE for the given BF.

Starting Method

Starting method also impacts the correlation between BE and BEF. Instant-start ballasts are in general more efficient than rapid-start and programmed-start ballasts. Because instant-start ballasts do not supply electrode heating, there are fewer losses in the ballasts' internal circuitry and more of the output power goes to the lamp arc. Rapid-start and programmed-start ballasts use part of their output power to heat the lamp electrodes. In short, starting method has nonlinear effects on the light-output-based measurement of BEF and the BE-based measurement of BEF such that specific transfer equations are required for each starting method. Therefore, DOE parsed the data into groupings based on starting method. Within these groupings, DOE plotted BE versus BEF and computed a linear regression to generate an equation for BEF as a function of BE. In the fluorescent lamp ballast standards rulemaking, DOE plans to consider grouping instant-start and rapid-start ballasts in the same product class and programmed-start ballasts in a separate product class based on consumer utility. To create BEF values which are comparable for product classes with instant-start and programmed-start ballasts, DOE proposes to use one transfer equation for converting BE to BEF. This decision was made on the basis that ballasts of the same BE should have the same BEF.

Lamp Diameter

In the fluorescent lamp ballast standards rulemaking, DOE has tentatively determined that there is no distinct consumer utility difference between T8 and T12 ballasts. As a result, DOE is grouping T8 and T12 ballasts in the same product class. At the 2008 public meeting, NEMA commented that BEF measurement requires photometric measurements of a reference lamp attached to the test ballast; thus, BEF values cannot be compared across ballasts that operate different lamp types. (NEMA, Public Meeting Transcript, No. 9 at pp. 124–125; NEMA, No. 11 at p. 6) DOE agrees that under the existing test procedure, the BEF values measured for T8 and T12 ballasts are not comparable because the reference lamps for these ballasts have different rated power. Because certain T8 and T12 ballasts would be subject to the same energy conservation standard (in the preliminary analysis of the fluorescent ballast standards rulemaking these ballasts are in the same product class), DOE proposes to amend the test procedure such that the reported T12 ballast BEF would be comparable to the reported BEF for a T8 ballast. To achieve this, DOE first developed transfer equations based on data for T8 ballasts in a given product class. To generate T12 ballast BEF values which are comparable to T8 ballast BEF values, DOE proposes using the transfer equations developed for the relevant T8 ballasts to generate a BEF for T12 ballasts. As such, a T12 ballast BE value would be used as an input to the relevant T8 transfer equation. The T8 transfer equation would then output a T12 ballast BEF value comparable to BEF values for T8 ballasts. DOE made this decision based on the assumption that T8 and T12 ballasts with the same BE should have the same BEF when reporting compliance with energy conservations standards.

6. Transfer Equations—Testing, Analysis, and Results

In the fluorescent lamp ballast standards rulemaking, DOE has preliminarily categorized ballasts into 70 product classes. In today's test procedure, DOE proposes to generate separate transfer equations for each product class. DOE targeted representative product classes and certain key product classes for extensive testing with the expectation that scaling would be required to establish transfer equations for the remaining product classes. DOE found strong correlation between BE and BEF for the product classes indicated in Table III.1.

DOE believes a linear relationship should exist between BE and BEF for ballasts of the same ballast factor, starting method, number of lamps, and lamp type. All ballasts under these constraints send the same amount of output power to a lamp, and therefore, ballasts of different efficiency vary in input power only. A more efficient ballast requires less input power to yield the same output power as a less efficient ballast. Because both BE and BEF are proportional to the same expression (the inverse of input power), a linear relationship should exist between the two metrics. The test data indicated a linear relationship between BE and BEF, consistent with DOE's expectation. Although DOE tested mostly electronic ballasts, which are generally more efficient than their magnetic counterparts, DOE believes the linear relationship between BE and BEF should exist across all values of BE and BEF. As such, DOE developed linear relationships between BE and BEF such that the equation passed through the origin (a BE of zero should correspond to a BEF of zero). DOE developed transfer equations in the form BEF = slope * BE, establishing a slope for each product class for the conversion of BE to BEF.

Table III.1 Transfer Equation Development Method by Product Class

Ballast and Lamp Type	Starting Method	Ballast Factor	Number of Lamps					
			One	Two	Three	Four	Five	Six
Four-Foot MBP, and Two-Foot U-Shaped	IS and RS (not PS)	High	1	2	3	4	5	6
		Normal	7	8	9	10	11	12
		Low	13	14	15	16	17	18
	PS	High	19	20	21	22	23	24
		Normal	25	26	27	28	29	30
		Low	31	32	33	34	35	36
Four-Foot T5 MiniBP SO	All	High	37	38	---	---	---	---
		Normal	39	40	---	---	---	---
		Low	41	42	---	---	---	---
Four-Foot T5 MiniBP HO	All	All	43	44	45	46	---	---
Eight-Foot SP Slimline	All	High	47	48	---	---	---	---
		Normal	49	50	---	---	---	---
		Low	51	52	---	---	---	---
Eight-Foot RDC HO	IS and RS	All	53	54	---	---	---	---
	PS	All	55	56	---	---	---	---
Residential Ballast, Four-Foot MBP, and Two-Foot U-Shaped	IS and RS (not PS)	All	57	58	59	60	---	---
	PS	All	61	62	63	64	---	---
Sign Ballast	All	All	65	66	67	68	69	70

Gray shading indicates the slope is based on test data directly. Gray shading with diagonal lines indicates the slope is based on a relationship between total rated lamp power and slope. All other product classes (not shaded) have slopes based on scaling relationships. DOE tested ballasts for BE and BEF in underlined product classes.
*IS = Instant-start; RS = Rapid-start; PS = Programmed-start

Based on the test data for 4-foot 32W MBP T8 ballasts, DOE established scaling ratios for ballast factor type, number of lamps operated, and starting method. For ballast factor type, DOE calculated the ratio of the slopes for product classes 2 and 14 compared to product class 8 and used these ratios for scaling all other normal ballast factor product classes to their high and low ballast factor counterparts. For starting method, DOE employed a similar technique to the ballast factor type scaling method. DOE calculated the ratio of the slopes for product class 8 and product class 26 to establish a relationship between the combined instant- and rapid-start ballast product classes and the programmed-start product classes. Again, DOE based scaling for all other combined instant- and rapid-start ballast product classes to their programmed-start counterparts on this ratio between instant- and rapid-start ballast and programmed-start ballasts. For number of lamps operated by a ballast, DOE fit a power regression equation to the slopes for 4-foot MBP T8 instant- and rapid-start normal BF ballasts that operate one, two, or three lamps (product classes 7, 8, and 9). DOE used the equation to extrapolate the slopes for products classes 10, 11, and 12 (four, five, and six lamps) DOE then used the slopes for product classes 7 through 12 to establish ratios between the slopes for ballasts that operate 1, 3, 4, 5, or 6 lamps and the slope for ballasts that operate 2 lamps. Again, DOE based scaling for all other 2 lamp, normal BF ballasts to their 1, 3, 4, 5, and 6 lamp counterparts on the number of lamps ratios generated with product classes 7 through 12.

DOE focused its testing on 4-foot 32W MBP T8 ballasts for the establishment of scaling ratios between BF, number of lamps, and starting method. DOE tested smaller quantities of ballasts from other product classes, but found 8-foot T8 SP slimline ballasts to have a strong correlation between BE and BEF in the available dataset. For 4-foot T5 SO, 4-foot T5 HO, 8-foot RDC HO, and sign ballasts, DOE developed a relationship between total rated lamp power and the slope of the line relating BE to BEF. Total rated lamp power is the sum of the rated lamp wattages (as defined in 10 CFR 430.2) operated by a particular ballast. DOE fit a power regression equation to the slopes and total rated input powers for product classes [19] 7, 8, 9, 49, and 50. Using this relationship, DOE extrapolated and interpolated slopes for product classes product

[19] Product classes are identified by numbers in Table III.1.

classes 39, 40, 43 through 46, 53, 54, and 65 through 70. DOE estimated the slopes based on total rated lamp power for these product classes because there was insufficient correlation in the test data to establish a slope. DOE invites comment on its scaling technique for number of lamps operated by a ballast, starting method, ballast factor, and total rated lamp power.

Table III.2 lists the slope of the line developed by DOE for converting measured BE to BEF. Using the equation BEF = slope * BE, measured BE is converted to BEF.

Table III.2 Transfer Equation Slopes

Ballast and Lamp Type	Starting Method*	Ballast Factor	Number of Lamps					
			One	Two	Three	Four	Five	Six
Four-Foot MBP, and Two-Foot U-Shaped	IS and RS (not PS)	High	3.233	1.624	1.081	0.812	0.650	0.542
		Normal	3.378	1.697	1.129	0.849	0.679	0.566
		Low	3.430	1.723	1.147	0.862	0.690	0.575
	PS	High	3.204	1.610	1.071	0.808	0.644	0.537
		Normal	3.348	1.682	1.119	0.844	0.673	0.561
		Low	3.400	1.708	1.137	0.857	0.684	0.570
Four-Foot T5 MiniBP SO	All	High	2.910	1.584	---	---	---	---
		Normal	3.041	1.655	---	---	---	---
		Low	3.088	1.680	---	---	---	---
Four-Foot T5 MiniBP HO	All	All	1.703	0.927	0.649	0.504	---	---
Eight-Foot SP Slimline	All	High	1.653	0.841	---	---	---	---
		Normal	1.727	0.878	---	---	---	---
		Low	1.754	0.892	---	---	---	---
Eight-Foot RDC HO	IS and RS (not PS)	All	1.128	0.614	---	---	---	---
	PS	All	1.138	0.619	---	---	---	---
Residential Ballast, Four-Foot MBP, and Two-Foot U-Shaped	IS and RS (not PS)	All	3.357	1.686	1.122	0.853	---	---
	PS	All	3.328	1.671	1.113	0.846	---	---
Sign Ballast	All	All	0.888	0.483	0.338	0.263	0.216	0.184

Gray shading indicates the slope is based on test data directly. Gray shading with diagonal lines indicates the slope is based on a relationship between total rated lamp power and slope. All other product classes (not shaded) have slopes based on scaling relationships. DOE tested ballasts for BE and BEF in underlined product classes.
*IS = Instant-start; RS = Rapid-start; PS = Programmed-start

7. Resistor Value Determination

The resistor-based BE method requires a resistive load bank to be used in place of a lamp during ballast operation. Therefore, DOE determined [20] the resistive value corresponding to different lamp types operating at conditions described in ANSI C78.81–2005.[21] In some cases, the resistor value was calculated from data published in ANSI C78.81–2005. ANSI C78.81–2005 provides electrical characteristics of lamps under either high-frequency or low-frequency operation. For T8 and T12 lamps, ANSI C78.81–2005 provides electrical characteristics for low-frequency operation, and for T5 lamps, the standard provides characteristics for high-frequency operation. Since electronic ballasts operate in high-frequency, DOE needed to empirically determine high-frequency resistances for testing electronic ballasts that operate T8 and T12 lamps. Since all T5 ballasts currently offered in the market are electronic, DOE did not need to empirically determine resistor values for low-frequency operation. DOE determined one resistor value per lamp and did not modify the resistance based

[20] DOE determined the simulated lamp arc resistor value at BF = 0.88 for 4-foot 32 W MBP T8 ballasts because 0.88 was used in the NEMA round robin and is the most common BF for this ballast type.

[21] American National Standards for Electric Lamps, Double-Capped Fluorescent Lamps—Dimensional and Electrical Characteristics," approved August 11, 2005.

on each individual different ballast factors as discussed in section III.F.5. Table III.3 lists the resistor values determined empirically and those specified by ANSI C78.81–2005.

TABLE III.3—SIMULATED LAMP RESISTOR VALUES

Ballast type	Nominal lamp wattage	Lamp diameter and base	Low-frequency operation resistance (ohms)		High-frequency operation resistance (ohms)	
			Electrode ($R_{1/2E}$)	Lamp Arc (R_{arc})	Electrode ($R_{1/2E}$)	Lamp Arc (R_{arc})
Ballasts that operate one, two, three, four, five, or six straight-shaped lamps (commonly referred to as 4-foot medium bipin lamps) with medium bipin bases, a nominal overall length of 48 inches, a rated wattage of 25 W or more, and an input voltage at or between 120 V and 277 V.	32 34	T8 MBP ..... T12 MBP	5.75 4.8	439 151	5.75 4.8	760 204
Ballasts that operate one, two, three, four, five, or six U-shaped lamps (commonly referred to as 2-foot U-shaped lamps) with medium bipin bases, a nominal overall length between 22 and 25 inches, a rated wattage of 25 W or more, and an input voltage at or between 120 V and 277 V.	32 34	T8 MBP ..... T12 MBP	5.75 4.8	439 151	5.75 4.8	760 204
Ballasts that operate one or two rapid-start lamps (commonly referred to as 8-foot high output lamps) with recessed double contact bases, a nominal overall length of 96 inches and an input voltage at or between 120 V and 277 V.	86 95	T8 HO RDC T12 HO RDC	N/A 1.6	N/A 131	4.75 1.6	538 204
Ballasts that operate one or two instant-start lamps (commonly referred to as 8-foot slimline lamps) with single pin bases, a nominal overall length of 96 inches, a rated wattage of 52 W or more, and an input voltage at or between 120 V and 277 V.	59 60	T8 ..... slimline SP .. T12 ..... slimline SP ..	N/A* N/A*	876 313	N/A* N/A*	1256 431
Ballasts that operate one or two straight-shaped lamps (commonly referred to as 4-foot miniature bipin standard output lamps) with miniature bipin bases, a nominal length between 45 and 48 inches, a rated wattage of 26 W or more, and an input voltage at or between 120 V and 277 V.	28	T5 Mini-BP ..	N/A	N/A	20	950
Ballasts that operate one, two, three, or four straight-shaped lamps (commonly referred to as 4-foot miniature bipin high output lamps) with miniature bipin bases, a nominal length between 45 and 48 inches, a rated wattage of 49 W or more, and an input voltage at or between 120 V and 277 V.	54	T5 Mini-BP ..	N/A	N/A	4	255
Ballasts that operate one, two, three, or four straight-shaped lamps (commonly referred to as 4-foot medium bipin lamps) with medium bipin bases, a nominal overall length of 48 inches, a rated wattage of 25 W or more, an input voltage at or between 120 V and 277 V, a power factor of less than 0.90, and that are designed and labeled for use in residential applications.	32 34	T8 MBP ..... T12 MBP	5.75 4.8	439 151	5.75 4.8	760 204
Ballasts that operate one, two, three, four, five, or six rapid-start lamps (commonly referred to as 8-foot high output lamps) with recessed double contact bases, a nominal overall length of 96 inches, an input voltage at or between 120 V and 277 V, and that operate at ambient temperatures of 20 °F or less and are used in outdoor signs.	86 110	T8 HO RDC T12 HO RDC	N/A 1.6	N/A 166	4.75 1.6	538 275

MBP, Mini-BP, RDC, and SP represent medium bipin, miniature bipin, recessed double contact, and single pin, respectively.
* The resistor load bank representing 8-foot slimline single pin (SP) lamps does not have electrode resistors.

ANSI C78.81–2005 specifies the electrode resistance a lamp manufacturer must achieve through design and manufacturing. Electrode resistance is assumed to be the same for low-frequency and high-frequency operation because a tungsten filament (lamp electrode) has high impedance at both frequencies. For the lamp arc, the ANSI standard provides electrical characteristics for either high or low frequency, depending on the lamp type. By dividing lamp arc wattage by the square of lamp current, DOE calculated the resistance of the lamp arc resistor.

Where lamp specification sheets do not specify electrical characteristics for the desired frequency of operation, DOE determined resistor values empirically. DOE empirically determined resistor values for high-frequency operation of 32 W F32T8, 60 W F96T12/ES, 95 W F96T12HO/ES, and 110 W F96T12HO lamps. To determine the resistor values empirically, DOE first measured the light output of a reference lamp operated by a reference ballast at low frequency. Next, DOE connected the same reference lamp to a reference ballast operating at high frequency. By adjusting the voltage and current provided to the lamp, DOE achieved the same light output for high-frequency operation as measured in low-frequency operation. Then, DOE calculated the apparent resistance of the lamp under high-frequency operation using measured current and voltage.

DOE notes that the measurement of lamp arc power is slightly different than actual lamp arc power due to the empirical method of determining the resistor value. DOE calculated the lamp arc resistor using measured lamp voltage and current at a predetermined

light output. Part of this voltage is applied across the lamp electrodes, so the calculated lamp arc resistor value tends to be slightly larger than reality. DOE believes the increase in calculated lamp arc resistance due to voltage drop in the electrodes to be minimal in comparison to the true lamp arc resistance. Because DOE cannot measure lamp electrode resistance independently of the lamp arc, DOE was unable to account for this problem. Design of the fluorescent lamp prevents DOE from making this measurement. In addition, DOE does not identify the resistance for a discrete electrode resistor for ballasts that operate eight-foot slimline SP lamps because DOE could not determine this value empirically and ANSI C78.81–2005 does not list the resistance. In effect, the empirical resistor value determination method includes the resistance of the electrodes in the resistance of the lamp arc resistor. Because the SP lamps only have one pin, the electrodes and lamp arc are all connected in series. When DOE measured the resistance for the "lamp arc resistor," DOE was unable to separate the resistance of the electrodes from the lamp arc due to design of a fluorescent lamp. While it was necessary to use electrode resistors in medium bipin, miniature-bipin, and recessed double contact lamps to allow for an electrode heating circuit, single-pin lamps do not have this functionality and are only designed for use with instant-start ballasts. Therefore, the lamp arc resistor for single-pin lamps includes the effective resistance of the entire lamp in a single resistor.

In addition, today's proposed high-frequency lamp arc resistor values for ballasts that operate one, two, three, four, five, or six straight-shaped and U-shaped lamps with medium bipin bases, a nominal overall length of 48 inches, a rated wattage of 25 W or more, and an input voltage at or between 120 V and 277 V are based on a ballast factor of 0.88. This value resulted from DOE's participation in the NEMA round robin testing for the development of the resistor-based BE method. DOE selected a resistor for four-foot MBP ballasts that represented a 0.88 ballast factor, which is the most common ballast factor for this ballast type. For other ballast types, DOE used the electrical characteristics in ANSI C78.81–2005 to develop high-frequency lamp arc resistor values. These characteristics correspond to a ballast factor of 1.0. DOE does not believe that the quality of the test procedure is affected by the use of a different ballast factor for the 4-foot T8 MBP ballasts. DOE invites comment on this issue.

8. Non-Operational Ballasts When Connected to a Resistor

During the testing process, DOE targeted certain product classes spanning ranges of ballast factor, starting method, lamp type, and number of lamps for extensive testing of both BEF and BE. *See* section III.F.6 for additional detail on the specific product classes chosen for testing. DOE selected several ballasts, ranging from one to approximately fifteen, within each chosen product class and tested three samples of each ballast. As part of its testing process for developing transfer equations between BEF and BE, DOE identified seven different ballast models that did not operate the resistor load bank. Therefore, DOE was therefore unable to calculate these ballasts' BE. These ballasts were from different product classes and different manufacturers. In some cases, all three examples of a particular ballast did not operate a resistor, while in the other cases only one or two ballast examples did not operate a resistor. DOE also confirmed that the ballasts did operate properly when connected to fluorescent lamps. DOE does not know specifically why some ballasts do not operate resistor load banks. It appears these ballasts sensed the load was not a real fluorescent lamp and turned off. For ballasts found to not operate resistors, DOE proposes that manufacturers use the existing BEF test procedure found in appendix Q. In addition, DOE is considering an alternative proposal in which it would include improvements to the light-output-based test procedure in the procedure for ballasts that do not operate resistors. DOE believes this would improve the precision of the BEF measurements for ballasts that do not operate resistors. The improved light-output-based test procedure could be outlined as a separate section in Appendix Q1 only for use with ballasts that do not operate resistors. DOE invites comment on why some ballasts do not operate when connected to a resistor load bank.

9. Existing Test Procedure Update

As discussed in III.E.2, DOE proposes to update the reference in the existing test procedure (appendix Q) from ANSI C82.2–1984 to ANSI C82.2–2002, and to specify that where ANSI C82.2–2002 references ANSI C82.1–1997, the operator shall use ANSI C82.1–2004 for testing low-frequency ballasts and shall use ANSI C82.11–2002 for high-frequency ballasts. These changes to the existing test procedure to modernize the ANSI reference would be effective 30 days following publication of the test procedure final rule. DOE does not believe the updated standard will impose increased testing burden, nor will it alter the measured BEF of fluorescent lamp ballasts. Because the active mode and standby mode test procedures now both reference ANSI C82.2–2002, DOE proposes to both update the reference and reorganize the test procedure outlined in appendix Q for clarity.

10. References to ANSI C82.2–2002

As stated, in this NOPR DOE is proposing amendments to the fluorescent lamp ballast test procedure that would incorporate references to ANSI C82.2–2002 into appendix Q and appendix Q1. In examining the ANSI standard, DOE found that within ANSI C82.2–2002 there are references other ANSI standards. In particular, section 2 of ANSI C82.2–2002 states that "when American National Standards referred to in this document [ANSI C82.2–2002] are superseded by a revision approved by the American National Standards Institute, Inc. the revision shall apply." Revisions to these normative standards could potentially impact compliance with energy conservation standards by changing the tested value for energy efficiency. Therefore, DOE proposes to specify the particular versions of the ANSI standards that would be used in conjunction with ANSI C82.2–2002. DOE proposes to use ANSI C78.81–2005, ANSI C78.901–2005, ANSI C82.1–2004, ANSI C82.11–2002, and ANSI C82.13–2002 in support of ANSI C82.2–2002. All other normative references would be as directly specified in ANSI C82.2–2002. These specifications would apply to the ANSI C82.2–2002 references in Appendix Q and to the ANSI C82.2–2002 references in Appendix Q1. DOE conducted testing in development of today's proposed test procedure for Appendix Q1 in accordance with the aforementioned industry references.

G. Burden To Conduct the Proposed Test Procedure

EPCA requires that "[a]ny test procedures prescribed or amended under this section shall be reasonably designed to produce test results which measure energy efficiency, energy use * * * or estimated annual operating cost of a covered product during a representative average use cycle or period of use * * * and shall not be unduly burdensome to conduct." (42 U.S.C. 6293(b)(3)). Today's proposed test procedure seeks to calculate the efficiency of a ballast by computing the

ratio of ballast output power (simulated lamp arc power) to ballast input power. This ratio is then converted to ballast efficacy factor, the statutorily required efficiency metric. DOE believes its proposed method minimizes burden on manufacturers while still achieving an effective test procedure.

DOE sought to reduce manufacturer burden wherever possible. As described in section III.F.2, DOE chose to test each ballast type using only one resistor load bank instead of using a different load for each ballast factor and number of lamps associated with a ballast. DOE believes this choice reduces burden on the manufacturer. In addition, the proposed test procedure requires no additional measurement instrumentation beyond what ballast manufacturers use for the existing test procedure and other general uses. The required measurement of ballast factor is no different than the procedure manufacturers already use for reporting BF in their literature. The use of resistors for measuring ballast input power and lamp arc power, however, does impose a small incremental burden compared to the existing test procedure. DOE estimates the initial purchase cost of resistors for a two-lamp ballast to be about $1000 to $2000 and does not believe this additional materials burden is unreasonable due to the low cost and the fact that the materials cost can be amortized over the span of many years because the resistors maintain integrity over a long lifespan. The test procedure imposes a minimal incremental labor burden of about 30 to 60 minutes for a two-lamp ballast over the existing test procedure to measure BE using the ballast-resistor setup. For these reasons, even for small ballast manufacturers, DOE believes the testing burden is not unduly burdensome. DOE invites comment on this issue.

H. Impact on Measured Energy Efficiency

In any rulemaking to amend a test procedure, DOE must determine "to what extent, if any, the proposed test procedure would alter the measured energy efficiency * * * of any covered product as determined under the existing test procedure." (42 U.S.C. 6293(e)(1)) If DOE determines that the amended test procedure would alter the measured efficiency of a covered product, DOE must amend the applicable energy conservation standard accordingly. (42 U.S.C. 6293(e)(2)) This proposed active mode test procedure does impact the reported BEF value. Some products will test with higher or lower efficiency based on the new test procedure because of the transfer equation between the measured parameters and the reported BEF value. DOE is currently amending energy conservation standards for fluorescent lamp ballasts in the fluorescent lamp ballast standards rulemaking. In that rulemaking, DOE will consider standards based on the measured efficiency of the ballast in accordance with the test procedure proposed in this active mode test procedure rulemaking consistent with 42 U.S.C. 6293(e)(2). DOE will use test data that it collects in the course of both this test procedure rulemaking and the fluorescent lamp ballast standards rulemaking when setting energy conservation standards for fluorescent lamp ballasts.

I. Certification and Enforcement

Ballast manufacturers are currently not required to submit compliance statements and certification reports. In this rulemaking, DOE proposes to require fluorescent lamp ballast manufacturers to follow the certification and enforcement requirements summarized in subpart F of 10 CFR part 430.

DOE regulations at 10 CFR 430.62(a)(4) describe the format and content of a certification report for consumer products. DOE proposes to include fluorescent lamp ballasts in the list of products for which certification reports are required (along with specific energy consumption metrics). The revised submission of data section will indicate that ballast manufacturers should report ballast efficacy factor and power factor in certification reports. The definition of "basic model" can be found at 10 CFR 430.2; the fluorescent lamp ballast test procedure can be found in 10 CFR part 430, subpart B, Appendix Q, and the sampling plan can be found at 10 CFR 430.24(q). Manufacturers would be required to follow all other provisions of subpart F of 10 CFR part 430 for certification and enforcement applicable to all covered ballasts.

DOE proposes that certification statements and compliance reports be submitted in accordance with the existing energy conservation standards one year after publication of this rulemaking (publication approximately June 30, 2011). In addition, DOE proposes that certification statements and compliance reports be submitted in accordance with the revised energy conservation standards and possible expansion of scope of coverage one year after these standards become effective (effective date of standards approximately June 30, 2014).

IV. Procedural Issues and Regulatory Review

A. Executive Order 12866

Today's proposed rule has been determined to not be a "significant regulatory action" under Executive Order 12866, "Regulatory Planning and Review," 58 FR 51735 (Oct. 4, 1993). Accordingly, this action was not subject to review under that Executive Order by the Office of Information and Regulatory Affairs (OIRA) of the Office of Management and Budget (OMB).

B. National Environmental Policy Act

In this proposed rule, DOE proposes test procedure amendments that it expects will be used to develop and implement future energy conservation standards for ballasts. DOE has determined that this rule falls into a class of actions that are categorically excluded from review under the National Environmental Policy Act of 1969 (42 U.S.C. 4321 *et seq.*) and DOE's implementing regulations at 10 CFR part 1021. Specifically, this proposed rule would amend the existing test procedures without affecting the amount, quality or distribution of energy usage, and, therefore, would not result in any environmental impacts. Thus, this rulemaking is covered by Categorical Exclusion A5 under 10 CFR part 1021, subpart D, which applies to any rulemaking that interprets or amends an existing rule without changing the environmental effect of that rule. Accordingly, neither an environmental assessment nor an environmental impact statement is required.

C. Regulatory Flexibility Act

The Regulatory Flexibility Act (5 U.S.C. 601 *et seq.*) requires preparation of an initial regulatory flexibility analysis for any rule that by law must be proposed for public comment, unless the agency certifies that the rule, if promulgated, will not have a significant economic impact on a substantial number of small entities. As required by Executive Order 13272, "Proper Consideration of Small Entities in Agency Rulemaking," 67 FR 53461 (August 16, 2002), DOE published procedures and policies on February 19, 2003, to ensure that the potential impacts of its rules on small entities are properly considered during the DOE rulemaking process. 68 FR 7990. DOE has made its procedures and policies available on the Office of the General Counsel's Web site: *http://www.gc.doe.gov.*

The Small Business Administration (SBA) has set size thresholds for

manufacturers of fluorescent lamp ballasts that define those entities classified as "small businesses" for the purposes of the RFA. DOE used the SBA's small business size standards to determine whether any small manufacturers of fluorescent lamp ballasts would be subject to the requirements of the rule. 65 FR 30836, 30850 (May 15, 2000), as amended at 65 FR 53533, 53545 (September 5, 2000) and codified at 13 CFR part 121. The size standards are listed by North American Industry Classification System (NAICS) code and industry description and are available at *http://www.sba.gov/idc/groups/public/documents/sba_homepage/serv_sstd_tablepdf.pdf.* Fluorescent lamp ballast manufacturing is classified under NAICS 335311, *Power, Distribution, & Specialty Transformer Manufacturing.* The SBA sets a threshold of 750 employees or less for an entity to be considered as a small business for this category.

To better assess the potential impacts of the proposed standards for fluorescent lamp ballasts on small entities, DOE conducted a more focused inquiry of the companies that could be small manufacturers of fluorescent lamp ballasts. During its market survey, DOE used all available public information to identify potential small manufacturers. DOE's research involved several industry trade association membership directories, product databases, individual company Web sites, and marketing research tools (*e.g.,* Dunn and Bradstreet reports) to create a list of every company that manufactures or sells fluorescent lamp ballasts covered by this rulemaking. DOE reviewed all publicly-available data and contacted select companies on its list, as necessary, to determine whether they met the SBA's definition of a small business manufacturer of covered fluorescent lamp ballasts. DOE screened out companies that did not offer fluorescent lamp ballasts covered by this rulemaking, did not meet the definition of a "small business," or are foreign owned and operated. Ultimately, DOE identified approximately 15 fluorescent lamp ballast manufacturers that produce covered fluorescent lamp ballasts and can potentially be considered small businesses.

The proposed rule includes revisions to appendix Q and appendix Q1, as well as certification reporting requirements. The revisions to appendix Q update an industry reference and do not change the test method or increase testing burden. The only difference between the two test procedures relates to the interference of testing instrumentation. Specifically, the input power measurement of ANSI C82.2–2002 reduces the interference of instrumentation on the input power measurement as compared to ANSI C82.2–1984. The vast majority of companies and testing facilities, however, already employ modern instrumentation that does not significantly interfere with input power measurements. Thus, updating this industry reference would not impose additional financial burden in terms of labor or materials. The proposed test procedure in appendix Q1 imposes a minimal incremental burden compared to the existing test procedure and industry practices. For a 2-lamp ballast, the new procedure requires a small increase in the labor burden of 30 to 60 minutes and a relatively small increase in materials costs ($1000 to $2000 initial purchase price). Finally, DOE estimates that the proposed certification reporting requirements would average 30 hours per response.

To analyze the testing burden impacts described above on small business manufacturers, DOE identified small business manufacturers of fluorescent lamp ballasts included in the preliminary scope of coverage considered in the fluorescent lamp ballast standards rulemaking as described above. DOE sought to examine publically available financial data for these companies to compare revenue and profit to the anticipated testing burden associated with this proposed test procedure. DOE determined that all the identified small business manufacturers were privately owned, and as a result, financial data was not publically available. Instead, DOE estimated testing burden for a small business with 0.1 percent market share of covered fluorescent lamp ballasts and revenue of approximately one million dollars. DOE assumed that this small manufacturer would sell approximately 30 basic models of a single ballast type. Based on the assumptions stated in the previous paragraphs, DOE estimated that the annual testing costs for this small business would be about $10,000, constituting 1 percent of annual revenue. Including the 30 hours per response for certification reporting, DOE believes this to be a small percentage of revenue and not a significant impact.

On the basis of the foregoing, DOE tentatively concludes and certifies that this proposed rule would not have a significant impact on a substantial number of small entities. Accordingly, DOE has not prepared a regulatory flexibility analysis for this rulemaking. DOE will provide its certification and supporting statement of factual basis to the Chief Counsel for Advocacy of the Small Business Administration for review under 5 U.S.C. 605(b).

D. Paperwork Reduction Act

This rule contains a collection-of-information requirement subject to the Paperwork Reduction Act (PRA) which has been approved by OMB under control number 1910–1400. Public reporting burden for compliance reporting for energy and water conservation standards is estimated to average 30 hours per response, including the time for reviewing instructions, searching existing data sources, gathering and maintaining the data needed, and completing and reviewing the collection of information. Send comments regarding this burden estimate, or any other aspect of this data collection, including suggestions for reducing the burden, to DOE (*see* **ADDRESSES**) and by e-mail to *Christine_J._Kymn@omb.eop.gov.*

Notwithstanding any other provision of the law, no person is required to respond to, nor shall any person be subject to a penalty for failure to comply with, a collection of information subject to the requirements of the PRA, unless that collection of information displays a currently valid OMB Control Number.

E. Unfunded Mandates Reform Act of 1995

Title II of the Unfunded Mandates Reform Act of 1995 (UMRA) (Pub. L. 104–4) requires each Federal agency to assess the effects of Federal regulatory actions on State, local, and Tribal governments and the private sector. For proposed regulatory actions likely to result in a rule that may cause expenditures by State, local, and Tribal governments, in the aggregate, or by the private sector of $100 million or more in any one year (adjusted annually for inflation), section 202 of UMRA requires a Federal agency to publish estimates of the resulting costs, benefits, and other effects on the national economy. (2 U.S.C. 1532(a), (b)) UMRA also requires Federal agencies to develop an effective process to permit timely input by elected officers of State, local, and Tribal governments on a proposed "significant intergovernmental mandate." In addition, UMRA requires an agency plan for giving notice and opportunity for timely input to small governments that may be affected before establishing a requirement that might significantly or uniquely affect them. On March 18, 1997, DOE published a statement of policy on its process for intergovernmental consultation under UMRA. 62 FR 12820. (This policy is

also available at *http://www.gc.doe.gov*). Today's proposed rule contains neither an intergovernmental mandate, nor a mandate that may result in the expenditure of $100 million or more in any year, so these requirements do not apply.

F. Treasury and General Government Appropriations Act, 1999

Section 654 of the Treasury and General Government Appropriations Act, 1999 (Pub. L. 105–277) requires Federal agencies to issue a Family Policymaking Assessment for any proposed rule that may affect family well-being. Today's proposed rule would not have any impact on the autonomy or integrity of the family as an institution. Accordingly, DOE has concluded that it is unnecessary to prepare a Family Policymaking Assessment.

G. Executive Order 13132

Executive Order 13132, "Federalism," 64 FR 43255 (August 4, 1999) imposes certain requirements on agencies formulating and implementing policies or regulations that preempt State law or that have Federalism implications. The Executive Order requires agencies to examine the constitutional and statutory authority supporting any action that would limit the policymaking discretion of the States and to carefully assess the necessity for such actions. The Executive Order also requires agencies to have an accountable process to ensure meaningful and timely input by State and local officials in the development of regulatory policies that have Federalism implications. On March 14, 2000, DOE published a statement of policy describing the intergovernmental consultation process it will follow in the development of such regulations. 65 FR 13735. DOE has examined this proposed rule and has determined that it would not have a substantial direct effect on the States, on the relationship between the national government and the States, or on the distribution of power and responsibilities among the various levels of government. EPCA governs and prescribes Federal preemption of State regulations as to energy conservation for the products that are the subject of today's proposed rule. States can petition DOE for exemption from such preemption to the extent, and based on criteria, set forth in EPCA. (42 U.S.C. 6297(d)) No further action is required by Executive Order 13132.

H. Executive Order 12988

With respect to the review of existing regulations and the promulgation of new regulations, section 3(a) of Executive Order 12988, "Civil Justice Reform," 61 FR 4729 (Feb. 7, 1996), imposes on Federal agencies the general duty to adhere to the following requirements: (1) Eliminate drafting errors and ambiguity; (2) write regulations to minimize litigation; (3) provide a clear legal standard for affected conduct rather than a general standard; and (4) promote simplification and burden reduction. Section 3(b) of Executive Order 12988 specifically requires that Executive agencies make every reasonable effort to ensure that the regulation: (1) Clearly specifies the preemptive effect, if any; (2) clearly specifies any effect on existing Federal law or regulation; (3) provides a clear legal standard for affected conduct while promoting simplification and burden reduction; (4) specifies the retroactive effect, if any; (5) adequately defines key terms; and (6) addresses other important issues affecting clarity and general draftsmanship under any guidelines issued by the Attorney General. Section 3(c) of Executive Order 12988 requires Executive agencies to review regulations in light of applicable standards in sections 3(a) and 3(b) to determine whether they are met or it is unreasonable to meet one or more of them. DOE has completed the required review and determined that, to the extent permitted by law, the proposed rule meets the relevant standards of Executive Order 12988.

I. Treasury and General Government Appropriations Act, 2001

Section 515 of the Treasury and General Government Appropriations Act, 2001 (Pub. L. 106–554; 44 U.S.C. 3516 note) provides for agencies to review most disseminations of information to the public under guidelines established by each agency pursuant to general guidelines issued by OMB. OMB's guidelines were published at 67 FR 8452 (Feb. 22, 2002), and DOE's guidelines were published at 67 FR 62446 (Oct. 7, 2002). DOE has reviewed today's proposed rule under the OMB and DOE guidelines and has concluded that it is consistent with applicable policies in those guidelines.

J. Executive Order 13211

Executive Order 13211, "Actions Concerning Regulations That Significantly Affect Energy Supply, Distribution, or Use," 66 FR 28355 (May 22, 2001), requires Federal agencies to prepare and submit to OMB, a Statement of Energy Effects for any proposed significant energy action. A "significant energy action" is defined as any action by an agency that promulgated or is expected to lead to promulgation of a final rule, and that: (1) Is a significant regulatory action under Executive Order 12866, or any successor order; and (2) is likely to have a significant adverse effect on the supply, distribution, or use of energy; or (3) is designated by the Administrator of OIRA as a significant energy action. For any proposed significant energy action, the agency must give a detailed statement of any adverse effects on energy supply, distribution, or use should the proposal be implemented, and of reasonable alternatives to the action and their expected benefits on energy supply, distribution, and use. Today's regulatory action to amend the test procedure for measuring the energy efficiency of fluorescent lamp ballasts is not a significant regulatory action under Executive Order 12866. Moreover, it would not have a significant adverse effect on the supply, distribution, or use of energy, nor has it been designated as a significant energy action by the Administrator of OIRA. Therefore, it is not a significant energy action, and, accordingly, DOE has not prepared a Statement of Energy Effects.

K. Executive Order 12630

Pursuant to Executive Order 12630, "Governmental Actions and Interference with Constitutionally Protected Property Rights," 53 FR 8859 (March 15, 1988), DOE has determined that this rule would not result in any takings that might require compensation under the Fifth Amendment to the United States Constitution.

L. Section 32 of the Federal Energy Administration Act of 1974

Under section 301 of the Department of Energy Organization Act (Pub. L. 95–91; 42 U.S.C. 7101), DOE must comply with section 32 of the Federal Energy Administration Act of 1974, as amended by the Federal Energy Administration Authorization Act of 1977. (15 U.S.C. 788; FEAA) Section 32 essentially provides in relevant part that, where a proposed rule authorizes or requires use of commercial standards, the notice of proposed rulemaking must inform the public of the use and background of such standards. In addition, section 32(c) requires DOE to consult with the Attorney General and the Chairman of the Federal Trade Commission (FTC) concerning the impact of the commercial or industry standards on competition. The proposed rule incorporates testing methods contained in the following commercial standards: ANSI C82.2–2002, Method of Measurement of Fluorescent Lamp Ballasts. While today's proposed test

procedure is not exclusively based on ANSI C82.2–2002, one component of the test procedure, namely measurement of ballast factor, adopts a measurement technique from ANSI C82.2–2002 without amendment. The Department has evaluated these standards and is unable to conclude whether they fully comply with the requirements of section 32(b) of the FEAA, (*i.e.,* that they were developed in a manner that fully provides for public participation, comment, and review). DOE will consult with the Attorney General and the Chairman of the FTC concerning the impact of these test procedures on competition, prior to prescribing a final rule.

V. Public Participation

A. Attendance at Public Meeting

The time, date and location of the public meeting are listed in the **DATES** and **ADDRESSES** sections at the beginning of this NOPR. To attend the public meeting, please notify Ms. Brenda Edwards at (202) 586–2945. As explained in the **ADDRESSES** section, foreign nationals visiting DOE headquarters are subject to advance security screening procedures.

B. Procedure for Submitting Requests To Speak

Any person who has an interest in the topics addressed in this notice, or who is a representative of a group or class of persons that has an interest in these issues, may request an opportunity to make an oral presentation at the public meeting. Such persons may hand-deliver requests to speak to the address shown in the **ADDRESSES** section at the beginning of this notice between 9 a.m. and 4 p.m., Monday through Friday, except Federal holidays. Requests may also be sent by mail or e-mail to: Ms. Brenda Edwards, U.S. Department of Energy, Building Technologies Program, Mailstop EE–2J, 1000 Independence Avenue, SW., Washington, DC 20585–0121, or *Brenda.Edwards@ee.doe.gov.* Persons who wish to speak should include in their request a computer diskette or CD in WordPerfect, Microsoft Word, PDF, or text (ASCII) file format that briefly describes the nature of their interest in this rulemaking and the topics they wish to discuss. Such persons should also provide a daytime telephone number where they can be reached.

DOE requests that those persons who are scheduled to speak submit a copy of their statements at least one week prior to the public meeting. DOE may permit any person who cannot supply an advance copy of this statement to participate, if that person has made alternative arrangements with the Building Technologies Program in advance. When necessary, the request to give an oral presentation should ask for such alternative arrangements.

C. Conduct of Public Meeting

DOE will designate a DOE official to preside at the public meeting and may also employ a professional facilitator to aid discussion. The public meeting will be conducted in an informal, conference style. The meeting will not be a judicial or evidentiary public hearing, but DOE will conduct it in accordance with section 336 of EPCA (42 U.S.C. 6306). There shall not be discussion of proprietary information, costs or prices, market share, or other commercial matters regulated by U.S. anti-trust laws.

DOE reserves the right to schedule the order of presentations and to establish the procedures governing the conduct of the public meeting. A court reporter will record the proceedings and prepare a transcript.

At the public meeting, DOE will present summaries of comments received before the public meeting, allow time for presentations by participants, and encourage all interested parties to share their views on issues affecting this rulemaking. Each participant may present a prepared general statement (within time limits determined by DOE) before the discussion of specific topics. Other participants may comment briefly on any general statements. At the end of the prepared statements on each specific topic, participants may clarify their statements briefly and comment on statements made by others. Participants should be prepared to answer questions from DOE and other participants. DOE representatives may also ask questions about other matters relevant to this rulemaking. The official conducting the public meeting will accept additional comments or questions from those attending, as time permits. The presiding official will announce any further procedural rules or modification of procedures needed for the proper conduct of the public meeting.

DOE will make the entire record of this proposed rulemaking, including the transcript from the public meeting, available for inspection at the U.S. Department of Energy, 6th Floor, 950 L'Enfant Plaza, SW., Washington, DC 20024, (202) 586–2945, between 9 a.m. and 4 p.m., Monday through Friday, except Federal holidays. The official transcript will also be posted on the Web page at *http://www1.eere.energy.gov/buildings/appliance_standards/residential/fluorescent_lamp_ballasts.html.*

D. Submission of Comments

DOE will accept comments, data, and information regarding the proposed rule no later than the date provided at the beginning of this notice. Comments, data, and information submitted to DOE's e-mail address for this rulemaking should be provided in WordPerfect, Microsoft Word, PDF, or text (ASCII) file format. Stakeholders should avoid the use of special characters or any form of encryption, and wherever possible, comments should include the electronic signature of the author. Comments, data, and information submitted to DOE via mail or hand delivery/courier should include one signed paper original. No telefacsimiles (faxes) will be accepted.

According to 10 CFR 1004.11, any person submitting information that he or she believes to be confidential and exempt by law from public disclosure should submit two copies: one copy of the document including all the information believed to be confidential, and one copy of the document with the information believed to be confidential deleted. DOE will make its own determination as to the confidential status of the information and treat it according to its determination.

Factors of interest to DOE when evaluating requests to treat submitted information as confidential include: (1) A description of the items; (2) whether and why such items are customarily treated as confidential within the industry; (3) whether the information is generally known by or available from other sources; (4) whether the information has previously been made available to others without obligation concerning its confidentiality; (5) an explanation of the competitive injury to the submitting person which would result from public disclosure; (6) a date upon which such information might lose its confidential nature due to the passage of time; and (7) why disclosure of the information would be contrary to the public interest.

E. Issues on Which DOE Seeks Comment

Although comments are welcome on all aspects of this rulemaking, DOE is particularly interested in receiving comments and views of interested parties concerning the following issues:

1. All Aspects of the Existing Test Procedure for Active Mode Energy Consumption

DOE invites comment on all aspects of the existing test procedure for fluorescent lamp ballasts for active

mode energy consumption that appear at 10 CFR part 430, subpart B, appendix Q ("Uniform Test Method for Measuring the Energy Consumption of Fluorescent Lamp Ballasts").

2. Appropriate Usage of ANSI Standards

DOE seeks comment on the appropriate use of ANSI C82.2–2002, ANSI C82.11 Consolidated-2002, and ANSI C82.1–2004. *See* section III.E.3 for further detail.

3. Method of Measurement for Dimming Ballasts

DOE seeks comment on potential methods of measurement to determine the efficiency of dimming ballasts if DOE decides to include them in the scope of energy conservation standards. *See* section III.F.2 for further detail.

4. Resistor-Based Ballast Efficiency Test Method

DOE seeks comment on the effectiveness of the proposed resistor-based BE test method and its expected improvement in measurement variation. *See* section III.E.1 for further details.

5. Alternative Approaches To Amending the Test Procedure

DOE seeks comment from interested parties who do not support the proposed resistor-based ballast efficiency method on the lamp-based BE method and the light-output-based and RSE test procedures (*see* sections III.E.2, III.E.3, and III.E.4 for further detail), or any other procedure they believe is appropriate.

6. Ballasts That Do Not Operate Resistors

DOE seeks comment on why some ballasts do not operate when connected to a resistor load bank and DOE's proposal to measure BEF directly (as a light output measurement) for these ballasts. DOE invites comment on other approaches to test these ballasts. *See* section III.F.8 for further detail.

7. Ballast Factor Variation Due to Variations in Measured Lamp Power

DOE recognizes that in order to correlate measured BE to BEF using DOE's proposed test procedure, the BF of the test ballast must be determined. DOE seeks comment on DOE's approach to use light output-based measurement to determine ballast factor and the resulting variation in ballast factor due to lamp manufacturing variations. DOE also requests comment on impact of this variation in BF on the calculated BEF (according to the proposed test procedure). *See* section III.F.3 for further detail.

8. Ballast Factor Binning

DOE seeks comment on the effect of DOE's approach of using a single resistor value for measuring ballasts of all ballast factors (for a particular ballast) and correlating measured BE to correlated BEF using transfer equations specific to ballast factor bins. *See* section III.F.5 for further detail.

9. Transfer Equations

DOE seeks comment on the transfer equations developed to convert BE to BEF. *See* section III.F.5 for further detail.

10. Scaling Transfer Equations

DOE seeks comment on the transfer equation scaling techniques (across number of lamps operated by a ballast, starting method, ballast factor, and total rated lamp power) used for product classes in which there was insufficient correlation in the test data to establish a slope. *See* section III.F.6 for further detail.

11. Burden on Manufacturers and Testing Facilities

DOE seeks comment on its assessment of the anticipated burden imposed by the proposed test method. *See* section III.G for further detail.

VI. Approval of the Office of the Secretary

The Secretary of Energy has approved publication of this proposed rule.

List of Subjects in 10 CFR Part 430

Administrative practice and procedure, Confidential business information, Energy conservation, Household appliances, Imports, Incorporation by reference, Intergovernmental relations, Small businesses.

Issued in Washington, DC on February 12, 2010.

Cathy Zoi,

Assistant Secretary, Energy Efficiency and Renewable Energy.

For the reasons stated in the preamble, DOE is proposing to amend Part 430 of Chapter II of Title 10, Code of Federal Regulations as set forth below:

PART 430–ENERGY CONSERVATION PROGRAM FOR CONSUMER PRODUCTS

1. The authority citation for Part 430 continues to read as follows:

Authority: 42 U.S.C. 6291–6309; 28 U.S.C. 2461 note.

2. Section 430.3 is amended by:

a. Amending paragraphs (c)(5), (c)(7) and (c)(11) by adding at the end of the paragraphs the words "and Appendix Q1 of subpart B".

b. Redesignating paragraphs (c)(11) as (c)(12); (c)(12) as (c)(15); and (c)(13) as (c)(16).

c. Adding new paragraphs (c)(11), (c)(13) and (c)(14).

These revisions and additions read as follows:

§ 430.3 Materials incorporated by reference.

* * * * *

(c) * * *

(11) ANSI C82.1–2004, Revision of ANSI C82.1–1997 ("ANSI C82.1"), American National Standard for Lamp Ballast—Line-Frequency Fluorescent Lamp Ballast, approved November 19, 2004; IBR approved for Appendix Q of subpart B and Appendix Q1 of subpart B.

* * * * *

(13) ANSI C82.11–2002, Revision of ANSI C82.11–1993 ("ANSI C82.11"), American National Standard for Lamp Ballasts—High-frequency Fluorescent Lamp Ballasts, approved January 17, 2002; IBR approved for Appendix Q of subpart B and Appendix Q1 of subpart B.

(14) ANSI C82.13–2002 ("ANSI C82.13"), American National Standard for Lamp Ballasts—Definitions for Fluorescent Lamps and Ballasts, approved July 23, 2002; IBR approved for Appendix Q of subpart B and Appendix Q1 of subpart B.

* * * * *

3. Section 430.23 is amended by revising paragraph (q) to read as follows:

§ 430.23 Test procedures for the measurement of energy and water consumption.

* * * * *

(q) *Fluorescent Lamp Ballasts.* (1) The Estimated Annual Energy Consumption (EAEC) for fluorescent lamp ballasts, expressed in kilowatt-hours per year, shall be the product of:

(i) The input power in kilowatts as determined in accordance with section 3.1.3.1 of appendix Q to this subpart before the compliance date of the amended standards for fluorescent lamp ballasts or section 7.1.2.2 of appendix Q1 to this subpart beginning on the compliance date of the amended standards for fluorescent lamp ballasts; and

(ii) The representative average use cycle of 1,000 hours per year, the resulting product then being rounded off to the nearest kilowatt-hour per year.

(2) Ballast Efficacy Factor (BEF) shall be as determined in section 4.2 of appendix Q of this subpart before the compliance date of the amended

standards for fluorescent lamp ballasts or section 8.3 of appendix Q1 to this subpart beginning on the compliance date of the amended standards for fluorescent lamp ballasts.

(3) The Estimated Annual Operating Cost (EAOC) for fluorescent lamp ballasts, expressed in dollars per year, shall be the product of:

(i) The representative average unit energy cost of electricity in dollars per kilowatt-hour as provided by the Secretary,

(ii) The representative average use cycle of 1,000 hours per year, and

(iii) The input power in kilowatts as determined in accordance with section 3.1.3.1 of appendix Q to this subpart before the compliance date of the amended standards for fluorescent lamp ballasts or section 7.1.2.2 of appendix Q1 to this subpart beginning on the compliance date of the amended standards for fluorescent lamp ballasts, the resulting product then being rounded off to the nearest dollar per year.

(4) Standby power consumption of certain fluorescent lamp ballasts shall be measured in accordance with section 3.2 of appendix Q to this subpart.

* * * * *

4. Appendix Q to Subpart B of Part 430 is amended by:

a. Adding introductory text.

b. Revising sections 1.15, 1.16, and 1.17.

c. Removing section 2.1, redesignating section 2.2 as section 2, and revising redesignated section 2.

d. Redesignating sections 3.1, 3.2, 3.3, 3.3.1, 3.3.2, 3.3.3, 3.4, 3.4.1, and 3.4.2 as sections 3.1.1, 3.1.2, 3.1.3, 3.1.3.1, 3.1.3.2, 3.1.3.3, 3.1.4, 3.1.4.1, and 3.1.4.2, respectively.

e. Revising redesignated sections 3.1.1, 3.1.2, 3.1.3.1, 3.1.3.2, 3.1.3.3, 3.1.4.1, and 3.1.4.2.

f. Redesignating sections 3.5, 3.5.1, 3.5.2, 3.5.3, 3.5.3.1, 3.5.3.2, 3.5.3.3, and 3.5.3.4 as sections 3.2, 3.2.2, 3.2.3, 3.2.4, 3.2.4.1, 3.2.4.2, 3.2.4.3, and 3.2.4.4, respectively.

g. Adding sections 3.1 and 3.2.1.

h. Revising section 4.

These revisions and additions read as follows:

Appendix Q to Subpart B of Part 430—Uniform Test Method for Measuring the Energy Consumption of Fluorescent Lamp Ballasts

Appendix Q is effective until the compliance date of the amended standards for fluorescent lamp ballasts. After this date, all fluorescent lamp ballasts shall be tested using the provisions of Appendix Q1 except where Appendix Q1 specifies use Appendix Q for testing certain ballasts that do not operate resistors.

* * * * *

1. Definitions

* * * * *

1.15 *Power Factor* means the power input divided by the product of ballast input voltage and input current of a fluorescent lamp ballast, as measured under test conditions specified in ANSI C82.2–2002 (incorporated by reference; *see* § 430.3).

1.16 *Power input* means the power consumption in watts of a ballast an fluorescent lamp or lamps, as determined in accordance with the test procedures specified in ANSI C82.2–2002 (incorporated by reference; *see* § 430.3).

1.17 *Relative light output* means the light output delivered through the use of a ballast divided by the light output of a reference ballast, expressed as a percent, as determined in accordance with the test procedures specified in ANSI C82.2–2002 (incorporated by reference; *see* § 430.3).

* * * * *

2. Test Conditions

The measurement of standby mode power need not be performed to determine compliance with energy conservation standards for fluorescent lamp ballasts at this time. The above statement will be removed as part of a rulemaking to amend the energy conservation standards for fluorescent lamp ballasts to account for standby mode energy consumption, and the following shall apply on the compliance date for such requirements. The test conditions for testing fluorescent lamp ballasts shall be done in accordance with ANSI C82.2–2002 (incorporated by reference; *see* § 430.3). Any subsequent amendment to this standard by the standard setting organization will not affect the DOE test procedures unless and until amended by DOE. The test conditions for measuring active mode energy consumption are described in sections 4, 5, and 6 of ANSI C82.2–2002. The test conditions for measuring standby power are described in sections 5, 7, and 8 of ANSI C82.2–2002. Fluorescent lamp ballasts that are capable of connections to control devices shall be tested with all commercially available compatible control devices connected in all possible configurations. For each configuration, a separate measurement of standby power shall be made in accordance with section 4 of the test procedure.

3. * * *

3.1 Active Mode Energy Efficiency Measurement

3.1.1 The test method for testing the active mode energy efficiency of fluorescent lamp ballasts shall be done in accordance with ANSI C82.2–2002 (incorporated by reference; *see* § 430.3). Where ANSI C82.2–2002 references ANSI C82.1–1997, the operator shall use ANSI C82.1 (incorporated by reference; *see* § 430.3) for testing low-frequency ballasts and ANSI C82.11 (incorporated by reference; *see* § 430.3) for high-frequency ballasts.

3.1.2 *Instrumentation.* The instrumentation shall be as specified by sections 5, 7, 8, and 15 of ANSI C82.2–2002 (incorporated by reference; *see* § 430.3).

3.1.3 * * *

3.1.3.1 *Input Power.* Measure the input power (watts) to the ballast in accordance with ANSI C82.2–2002 (incorporated by reference; *see* § 430.3), section 4.

3.1.3.2 *Input Voltage.* Measure the input voltage (volts) (RMS) to the ballast in accordance with ANSI C82.2–2002 (incorporated by reference; *see* § 430.3), section 3.2.1 and section 4.

3.1.3.3 *Input Current.* Measure the input current (amps) (RMS) to the ballast in accordance with ANSI C82.2–2002 (incorporated by reference; *see* § 430.3), section 3.2.1 and section 4.

3.1.4 * * *

3.1.4.1 Measure the light output of the reference lamp with the reference ballast in accordance with ANSI C82.2–2002 (incorporated by reference; *see* § 430.3), section 12.

3.1.4.2 Measure the light output of the reference lamp with the test ballast in accordance with ANSI C82.2–2002 (incorporated by reference; *see* § 430.3), section 12.

3.2. * * *

3.2.1 The test for measuring standby mode energy consumption of fluorescent lamp ballasts shall be done in accordance with ANSI C82.2–2002 (incorporated by reference; *see* § 430.3).

* * * * *

4. Calculations

4.1 Calculate Relative Light Output

$$\frac{\text{Photocell output of lamp on test ballast}}{\text{Photocell output of lamp on ref. ballast}} \times 100 = \textit{relative light}\ \text{output}$$

Where:

Photocell output of lamp on test ballast is determined in accordance with section 3.1.4.2, expressed in watts, and

Photocell output of lamp on ref. ballast is determined in accordance with section 3.1.4.1, expressed in watts.

4.2 Determine the Ballast Efficacy Factor (BEF) Using the Following Equations

(a) Single lamp ballast.

$$BEF = \frac{\text{relative light output}}{\text{input power}}$$

(b) Multiple lamp ballast.

$$BEF = \frac{\text{average relative light output}}{\text{input power}}$$

Where:

Input power is determined in accordance with section 3.1.3.1,

Relative light output as defined in section 4.1, and

Average relative light output is the relative light output, as defined in section 4.1, for all lamps, divided by the total number of lamps.

4.3 Determine Ballast Power Factor (PF)

$$PF = \frac{Input\ power}{\text{Input voltage} \times \text{input current}}$$

Where:

Input power is as defined in section 3.1.3.1,

Input voltage is determined in accordance with section 3.1.3.2, expressed in volts, and

Input current is determined in accordance with section 3.1.3.3, expressed in amps.

5. Appendix Q1 is added to Subpart B of Part 430 to read as follows:

Appendix Q1 to Subpart B of Part 430—Uniform Test Method for Measuring the Energy Consumption of Fluorescent Lamp Ballasts

Appendix Q1 is effective on the compliance date of the amended standards for fluorescent lamp ballasts. Prior to this date, all fluorescent lamp ballasts shall be tested using the provisions of Appendix Q.

1. If the operator determines that a ballast does not operate a resistor load bank, then the operator should use the test procedure described in Appendix Q to Subpart B of Part 430. To determine that a ballast does not operate a resistor load bank, the input power, voltage, or current to the ballast should equal zero when tested in accordance with this Appendix Q1 to Subpart B of Part 430.

2. Where ANSI C82.2–2002 (incorporated by reference; *see* § 430.3) references ANSI C82.1–1997, the operator shall use ANSI C82.1 (incorporated by reference; *see* § 430.3) for testing low-frequency ballasts and shall use ANSI C82.11 (incorporated by reference; *see* § 430.3) for high-frequency ballasts.

3. Definitions

3.1. *Commercial ballast* is a fluorescent lamp ballast that is not a residential ballast as defined in Section 3.8 and meets technical standards for non-consumer RF lighting devices as specified in subpart C of 47 CFR part 18.

3.2. *Electrode heating* refers to power delivered to the lamp by the ballast for the purpose of raising the temperature of the lamp electrode or filament. ANSI standards generally refer to this process as cathode heating.

3.3. *High-frequency ballast* is as defined in ANSI C82.13 (incorporated by reference; *see* § 430.3).

3.4. *Instant-start* is the starting method used instant-start systems as defined in ANSI C82.13 (incorporated by reference; *see* § 430.3).

3.5. *Low-frequency ballast* is a fluorescent lamp ballast that operates at a supply frequency of 50 to 60 Hz and operates the lamp at the same frequency as the supply.

3.6. *Programmed-start* is the starting method used in programmed start systems as defined in ANSI C82.13 (incorporated by reference; *see* § 430.3).

3.7. *Rapid-start* is the starting method used in rapid-start type systems as defined in ANSI C82.13 (incorporated by reference; *see* § 430.3).

3.8. *Residential ballast* is a fluorescent lamp ballast designed and labeled for use in residential applications. Residential ballasts must meet the technical standards for consumer RF lighting devices as specified in subpart C of 47 CFR part 18.

3.9. *Resistor load bank* means a network of resistors used to model the load placed on a fluorescent lamp ballast by a fluorescent lamp.

3.10. *RMS* is the root mean square of a varying quantity.

4. Instruments

4.1. All instruments shall be as specified by ANSI C82.2–2002 (incorporated by reference; *see* § 430.3).

4.2. *Power Analyzer.* In addition to the specifications in ANSI C82.2–2002 (incorporated by reference; *see* § 430.3), the power analyzer shall have a maximum 100 pF capacitance to ground and frequency response between 40 Hz and 1 MHz.

4.3. *Current Probe.* In addition to the specifications in ANSI C82.2–2002 (incorporated by reference; *see* § 430.3), the current probe shall be galvanically isolated and have frequency response between 40 Hz and 20 MHz.

5. Test Setup

5.1. The ballast shall be connected to a main power source and to the resistor load bank according to the manufacturer's wiring instructions. Where the wiring diagram indicates connecting the ballast lead to a lamp, the lead should be connected to a resistor load bank.

5.1.1. Figures 1 and 2 illustrate the resistor load bank used to model one fluorescent lamp. The four resistors labeled as $R_{1/2E}$ represent the electrodes, and R_{arc} represents the lamp arc.

5.1.2. Wire lengths between the ballast and resistor load bank shall be the length provided by the ballast manufacturer.

5.2. A ballast shall be tested using one resistor load bank to simulate one lamp. A ballast shall be connected to the number of resistor load banks equal to the maximum number of lamps a ballast is designed to operate.

5.3. A ballast designed to operate a lamp at high-frequency (as defined in section 3.3) shall use a resistor with resistance that simulates high-frequency operation. A ballast designed to operate a lamp a low-frequency (as defined in section 3.5) shall use a resistor with resistance that simulates low-frequency operation.

5.4. A ballast shall be tested with a resistor load bank with the resistances indicated in Table A.

5.5. Power Analyzer

5.5.1. The power analyzer shall have n+1 channels where n is the number of lamps a ballast operates.

5.5.2. *Output Voltage.* Leads from the power analyzer should attach to each resistor load bank according to Figure 1 for rapid- and programmed-start ballasts and Figure 2 for instant-start ballasts.

5.5.3. *Output Current.* A current probe shall be positioned on each resistor load bank according to Figure 1 for rapid- and programmed-start ballasts and Figure 2 for instant-start ballasts.

TABLE A—SIMULATED LAMP RESISTOR VALUES

Ballast type	Nominal lamp wattage	Lamp diameter and base	Low-frequency operation resistance (Ohms)		High-frequency operation resistance (Ohms)	
			Electrode ($R_{1/2E}$)	Lamp arc (R_{arc})	Electrode ($R_{1/2E}$)	Lamp arc (R_{arc})
Ballasts that operate one, two, three, four, five, or six straight-shaped lamps (commonly referred to as 4-foot medium bipin lamps) with medium bipin bases, a nominal overall length of 48 inches, a rated wattage of 25W or more, and an input voltage at or between 120V and 277V.	32	T8 MBP	5.75	439	5.75	760
	34	T12 MBP	4.8	151	4.8	204

TABLE A—SIMULATED LAMP RESISTOR VALUES—Continued

Ballast type	Nominal lamp wattage	Lamp diameter and base	Low-frequency operation resistance (Ohms)		High-frequency operation resistance (Ohms)	
			Electrode ($R_{1/2E}$)	Lamp arc (R_{arc})	Electrode ($R_{1/2E}$)	Lamp arc (R_{arc})
Ballasts that operate one, two, three, four, five, or six U-shaped lamps (commonly referred to as 2-foot U-shaped lamps) with medium bipin bases, a nominal overall length between 22 and 25 inches, a rated wattage of 25W or more, and an input voltage at or between 120V and 277V.	32 34	T8 MBP ..... T12 MBP	5.75 4.8	439 151	5.75 4.8	760 204
Ballasts that operate one or two rapid-start lamps (commonly referred to as 8-foot high output lamps) with recessed double contact bases, a nominal overall length of 96 inches and an input voltage at or between 120V and 277V.	86 95	T8 HO RDC T12 HO RDC	N/A 1.6	N/A 131	4.75 1.6	538 204
Ballasts that operate one or two instant-start lamps (commonly referred to as 8-foot slimline lamps) with single pin bases, a nominal overall length of 96 inches, a rated wattage of 52W or more, and an input voltage at or between 120V and 277V.	59 60	T8 slimline SP. T12 slimline SP.	N/A* N/A*	876 313	N/A* N/A*	1256 431
Ballasts that operate one or two straight-shaped lamps (commonly referred to as 4-foot miniature bipin standard output lamps) with miniature bipin bases, a nominal length between 45 and 48 inches, a rated wattage of 26W or more, and an input voltage at or between 120V and 277V.	28	T5 Mini-BP ..	N/A	N/A	20	950
Ballasts that operate one, two, three, or four straight-shaped lamps (commonly referred to as 4-foot miniature bipin high output lamps) with miniature bipin bases, a nominal length between 45 and 48 inches, a rated wattage of 49W or more, and an input voltage at or between 120V and 277V.	54	T5 Mini-BP ..	N/A	N/A	4	255
Ballasts that operate one, two, three, or four straight-shaped lamps (commonly referred to as 4-foot medium bipin lamps) with medium bipin bases, a nominal overall length of 48 inches, a rated wattage of 25W or more, an input voltage at or between 120V and 277V, a power factor of less than 0.90, and that are designed and labeled for use in residential applications.	32 34	T8 MBP ..... T12 MBP	5.75 4.8	439 151	5.75 4.8	760 204
Ballasts that operate one, two, three, four, five, or six rapid-start lamps (commonly referred to as 8-foot high output lamps) with recessed double contact bases, a nominal overall length of 96 inches, an input voltage at or between 120V and 277V, and that operate at ambient temperatures of 20 °F or less and are used in outdoor signs.	86 110	T8 HO RDC T12 HO RDC	N/A 1.6	N/A 166	4.75 1.6	538 275

MBP, Mini-BP, RDC, and SP represent medium bipin, miniature bipin, recessed double contact, and single pin, respectively.

* The resistor load bank representing 8-foot slimline single pin (SP) lamps does not have electrode resistors.

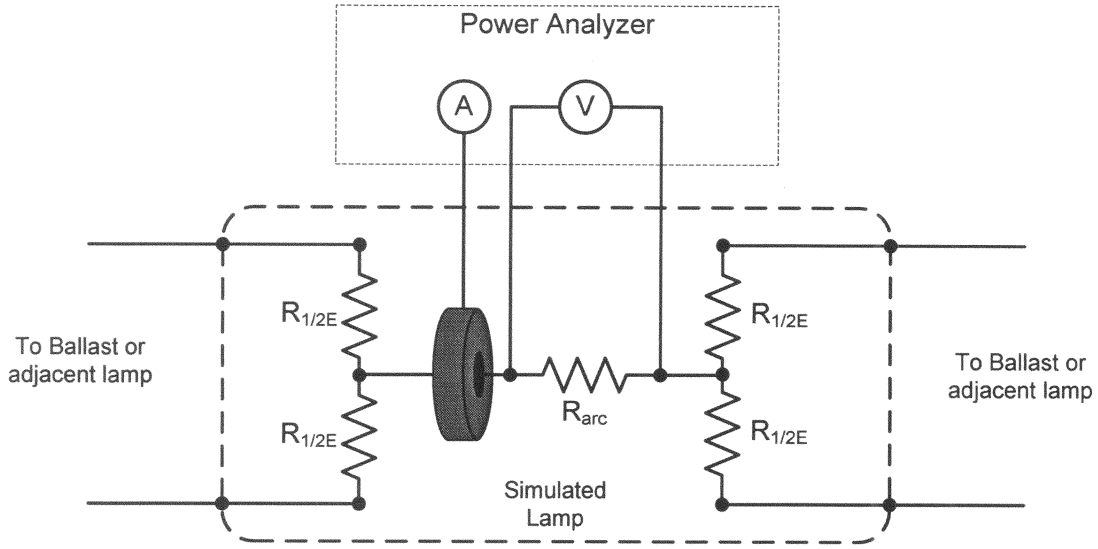

Figure 1 Instrumentation Placement for Ballasts that Operate MBP, RDC, and MiniBP Lamps

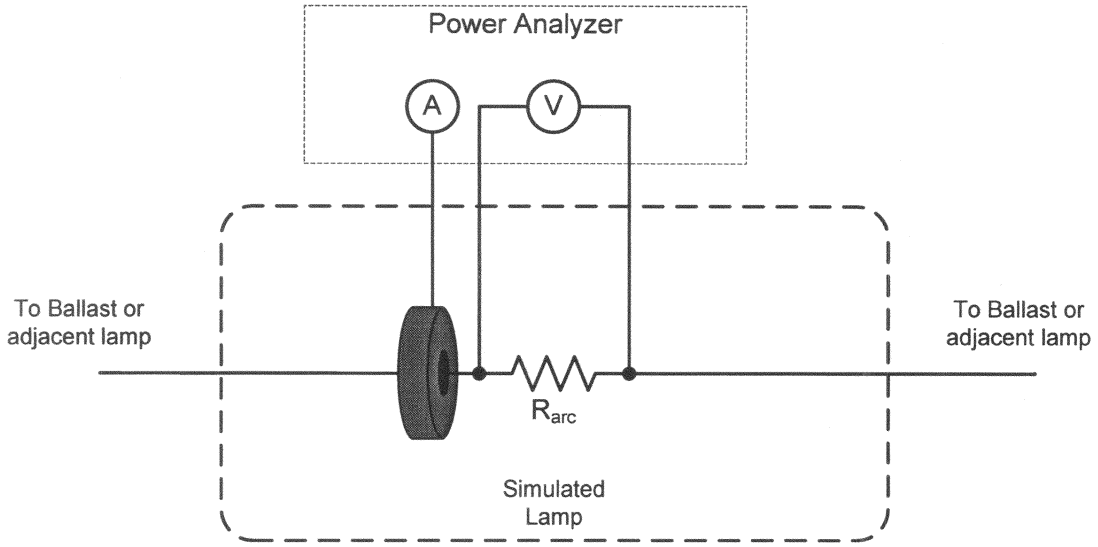

Figure 2 Instrumentation Placement for Ballasts that Operate SP Lamps

6. Test Conditions

6.1. The test conditions for testing fluorescent lamp ballasts shall be done in accordance with ANSI C82.2–2002 (incorporated by reference; *see* § 430.3). DOE further specifies that the following revisions of the normative references indicated in ANSI C82.2–2002) should be used in place of the references directly specified in ANSI C82.2–2002: ANSI C78.81 (incorporated by reference; *see* § 430.3), ANSI C78.901 (incorporated by reference; *see* § 430.3), ANSI C82.1 (incorporated by reference; *see* § 430.3), ANSI C82.3 (incorporated by reference; *see* § 430.3), ANSI C82.11 (incorporated by reference; *see* § 430.3), and ANSI C82.13 (incorporated by reference; *see* § 430.3). All other normative references shall be as specified in ANSI C82.2–2002.

6.2. *Temperature Stabilization.* Ballasts shall be thermally conditioned for at least 4 hours at room temperature (25 ± 2 °C), with normal room or lab ventilation.

6.3. *Input Voltage.* The directions in ANSI C82.2–2002 (incorporated by reference; *see* § 430.3) section 4.1 should be ignored with the following directions for input voltage used instead. For commercial ballasts capable of operating at multiple voltages, the ballast shall be tested 277V ± 0.1%. For ballasts designed and labeled for residential applications and capable or operating at multiple voltages, the ballast shall be tested at 120V ± 0.1%.

6.4. *Duty Cycle.* The duty cycle shall be no more than 50%. For every operational minute, the resistor load bank shall be rested at zero power for at least one minute.

7. Test Method

7.1. Ballast Efficiency

7.1.1. The ballast shall be connected to the appropriate resistor load bank and to measurement instrumentation as indicated by the Test Setup in section 5.

7.1.2. The ballast shall be operated for one minute followed by an instantaneous data

capture of the parameters described in sections 7.1.2.1 through 7.1.2.4.

7.1.2.1. *Output Power.* The power analyzer shall calculate output power by capturing voltage across each lamp arc resistor using the setup described in 5.5.2 and current to the lamp according to the setup described in 5.5.3 and summing the power for each lamp.

7.1.2.2. *Input Power.* Measure the input power (watts) to the ballast in accordance with ANSI C82.2–2002 (incorporated by reference; *see* § 430.3), section 7.

7.1.2.3. *Input Voltage.* Measure the input voltage (volts) (RMS) to the ballast in accordance with ANSI C82.2–2002 (incorporated by reference; *see* § 430.3), section 3.2.1 and section 4.

7.1.2.4. *Input Current.* Measure the input current (amps) (RMS) to the ballast in accordance with ANSI C82.2–2002 (incorporated by reference; *see* § 430.3), section 3.2.1 and section 4.

7.2. Ballast Factor

7.2.1. ANSI C82.2–2002 (incorporated by reference; *see* § 430.3) shall be further specified for the purpose of measuring ballast factor by the following:

7.2.1.1. The reference lamp shall be operated at the specified input voltage to the reference circuit.

7.2.1.2. Electrode heating shall be used in the reference circuit for all ballasts that operate bipin (MBP, mini-BP) or recessed double contact (RDC) lamps as indicated in Table A. Electrode heating shall not be used in the reference circuit for single pin lamps.

7.2.1.3. Light output measurements shall be used for all ballasts, including instant-start ballasts. Power measurements shall not be used.

7.2.2. Measure the light output of the reference lamp with the reference ballast in accordance with ANSI C82.2–2002 (incorporated by reference; *see* § 430.3), section 12, using section 7.2.1 to further specify ANSI C82.2–2002. The reference lamp shall have the nominal wattage corresponding to the test ballast as indicated in Table A.

7.2.3. Measure the light output of the reference lamp with the test ballast in accordance with ANSI C82.2–2002 (incorporated by reference; *see* § 430.3), section 12, using section 7.2.1 to further specify ANSI C82.2–2002 The reference lamp shall have the nominal wattage corresponding to the test ballast as indicated in Table A.

8. Calculations

8.1. Calculate Ballast Factor (BF)

$$\text{Ballast Factor} = \frac{\text{Photocell output of lamp on test ballast}}{\text{Photocell output of lamp on reference ballast}} \times 100$$

Where:

Photocell output of lamp on test ballast is determined in accordance with section 7.2.2, expressed in watts, and

Photocell output of lamp on reference ballast is determined in accordance with section 7.2.3, expressed in watts.

8.2. Calculate Ballast Efficiency (BE)

8.3. Calculate Ballast Efficacy Factor (BEF). Multiply BE by the Appropriate Conversion Factor in Table B. BEF = Conversion Factor × BE

TABLE B—CONVERSION FACTOR, BE TO BEF

Ballast and lamp type	Starting method*	Ballast factor**	Number of lamps					
			One	Two	Three	Four	Five	Six
Four-Foot MBP, and Two-Foot U–Shaped.	IS and RS (not PS)	High	3.233	1.624	1.081	0.812	0.650	0.542
		Normal	3.378	1.697	1.129	0.849	0.679	0.566
		Low	3.430	1.723	1.147	0.862	0.690	0.575
	PS	High	3.204	1.610	1.071	0.808	0.644	0.537
		Normal	3.348	1.682	1.119	0.844	0.673	0.561
		Low	3.400	1.708	1.137	0.857	0.684	0.570
Four-Foot T5, MiniBP SO	All	High	2.910	1.584	.....	.....	.....	.....
		Normal	3.041	1.655	.....	.....	.....	.....
		Low	3.088	1.680	.....	.....	.....	.....
Four-Foot T5, MiniBP HO	All	All	1.703	0.927	0.649	0.504	.....	.....
Eight-Foot SP Slimline	All	High	1.653	0.841	.....	.....	.....	.....
		Normal	1.727	0.878	.....	.....	.....	.....
		Low	1.754	0.892	.....	.....	.....	.....
Eight-Foot RDC HO	IS and RS (not PS)	All	1.128	0.614	.....	.....	.....	.....
	PS	All	1.138	0.619	.....	.....	.....	.....
Residential Ballast, Four-Foot MBP, and Two-Foot U–Shaped.	IS and RS (not PS)	All	3.357	1.686	1.122	0.853	.....	.....
	PS	All	3.328	1.671	1.113	0.846	.....	.....
Sign Ballast	All	All	0.888	0.483	0.338	0.263	0.216	0.184

*IS = Instant-start; RS = Rapid-start; PS = Programmed-start

**High ballast factor: BF ≥ 1.10; Normal ballast factor: 0.78 > BF >1.10; Low ballast factor: BF ≤ 0.78.

8.4. Calculate Power Factor (PF)

$$\text{Power Factor} = \frac{\text{Input Power}}{\text{Input Voltage} \times \text{Input Current}}$$

Where:

Input power is determined in accordance with section 7.1.2.2,

Input voltage is determined in accordance with section 7.1.2.2, and

Input current is determined in accordance with section 7.1.2.3.

6. Section 430.62 is amended by revising paragraph (a)(1), and adding new paragraphs (a)(4)(xxv) and (a)(6) to read as follows:

§ 430.62 Submission of data.

(a)(1) Except as provided in paragraph (a)(2) and (a)(6) of this section, each manufacturer or private labeler before distributing in commerce any basic model of a covered product subject to the applicable energy conservation standard or water conservation standard (in the case of faucets, showerheads, water closets, and urinals) set forth in subpart C of this part shall certify by means of a compliance statement and a certification report that each basic model(s) meets the applicable energy conservation standard or water conservation standard (in the case of faucets, showerheads, water closets, and urinals) as prescribed in section 325 of the Act. The compliance statement, signed by the company official submitting the statement, and the certification report(s) shall be sent by certified mail to: Department of Energy, Office of Energy Efficiency and Renewable Energy, Office of Codes and Standards, Forrestal Building, 1000 Independence Avenue, SW., Washington, DC 20585–0121.

* * * * *

(4) * * *

(xxv) Fluorescent Lamp Ballasts, the ballast efficacy factor (BEF) and the ballast power factor (PF).

* * * * *

(6) Each manufacturer or private labeler of a basic model of a covered fluorescent lamp ballast shall file a compliance statement and a certification report to DOE using the test procedure described in Appendix Q to Subpart B of Part 430 within 1 year of publication of the fluorescent lamp ballast test procedure and energy conservation standard final rulemaking. Furthermore, each manufacturer or private labeler of a basic model of a covered fluorescent lamp ballast shall file a compliance statement and a certification report to DOE using the test procedure described in Appendix Q1 to Subpart B of Part 430 before within 4 years of publication of the fluorescent lamp ballast test procedure and energy conservation standards final rulemaking.

* * * * *

[FR Doc. 2010–6374 Filed 3–23–10; 8:45 am]

BILLING CODE 6450–01–P

DEPARTMENT OF ENERGY

10 CFR Part 430

[Docket No. EERE–2007–BT–STD–0016]

RIN 1904–AB50

Energy Conservation Standards for Fluorescent Lamp Ballasts: Public Meeting and Availability of the Preliminary Technical Support Document

AGENCY: Office of Energy Efficiency and Renewable Energy, Department of Energy.

ACTION: Notice of public meeting and availability of preliminary technical support document.

SUMMARY: The U.S. Department of Energy (DOE) will hold a public meeting to discuss and receive comments on: the product classes that DOE plans to analyze for purposes of establishing energy conservation standards for fluorescent lamp ballasts; the analytical framework, models, and tools that DOE is using to evaluate standards for these products; the results of preliminary analyses DOE performed for these products; and potential energy conservation standard levels derived from these analyses that DOE could consider for these products. DOE encourages written comments on these subjects. To inform interested parties and facilitate this process, DOE has prepared an agenda, a preliminary technical support document (TSD), and briefing materials, which are available at *http://www1.eere.energy.gov/buildings/appliance_standards/residential/fluorescent_lamp_ballasts.html.*

DATES: DOE will hold a public meeting on Monday, April 26, 2010, beginning at 9 a.m. in Washington, DC. The agenda for the public meeting will first cover the concurrent test procedure rulemaking for fluorescent lamp ballasts (see proposal in today's **Federal Register**), and then this energy conservation standards rulemaking for the same products. Any person requesting to speak at the public meeting should submit such a request, along with an electronic copy of the statement to be given at the public meeting, before 4 p.m., Monday, April 12, 2010. Written comments are welcome, especially following the public meeting, and should be submitted by May 10, 2010.

ADDRESSES: The public meeting will be held at the U.S. Department of Energy, Forrestal Building, Room 8E–089, 1000 Independence Avenue, SW., Washington, DC 20585–0121. Please note that foreign nationals participating in the public meeting are subject to advance security screening procedures. If a foreign national wishes to participate in the public meeting, please inform DOE of this fact as soon as possible by contacting Ms. Brenda Edwards at (202) 586–2945 so that the necessary procedures can be completed. Interested persons may submit comments, identified by docket number EERE–2007–BT–STD–0016, by any of the following methods:

- *Federal eRulemaking Portal: http://www.regulations.gov.* Follow the instructions for submitting comments.
- *E-mail: ballasts.rulemaking@ee.doe.gov.* Include EERE–2007–BT–STD–0016 and/or RIN 1904–AB50 in the subject line of the message.
- *Postal Mail:* Ms. Brenda Edwards, U.S. Department of Energy, Building Technologies Program, Mailstop EE–2J, Public Meeting for Fluorescent Lamp Ballasts, EERE–2007–BT–STD–0016, 1000 Independence Avenue, SW., Washington, DC 20585–0121. Telephone (202) 586–2945. Please submit one signed paper original.
- *Hand Delivery/Courier:* Ms. Brenda Edwards, U.S. Department of Energy, Building Technologies Program, Sixth Floor, 950 L'Enfant Plaza, SW., Washington, DC 20024. Telephone (202) 586–2945. Please submit one signed paper original.

Instructions: All submissions received must include the agency name and docket number.

Docket: For access to the docket to read background documents or a copy of the transcript of the public meeting or comments received, go to the U.S. Department of Energy, Sixth Floor, 950 L'Enfant Plaza, SW., Washington, DC 20024, (202) 586–2945, between 9 a.m. and 4 p.m., Monday through Friday, except Federal holidays. Please call Ms. Brenda Edwards at (202) 586–2945 for additional information regarding visiting the Resource Room.