AUTHENTICATED U.S. GOVERNMENT INFORMATION GPO

Federal Register

3–24–10 Wednesday
Vol. 75 No. 56 Mar. 24, 2010

Pages 14069–14322

The **FEDERAL REGISTER** (ISSN 0097–6326) is published daily, Monday through Friday, except official holidays, by the Office of the Federal Register, National Archives and Records Administration, Washington, DC 20408, under the Federal Register Act (44 U.S.C. Ch. 15) and the regulations of the Administrative Committee of the Federal Register (1 CFR Ch. I). The Superintendent of Documents, U.S. Government Printing Office, Washington, DC 20402 is the exclusive distributor of the official edition. Periodicals postage is paid at Washington, DC.

The **FEDERAL REGISTER** provides a uniform system for making available to the public regulations and legal notices issued by Federal agencies. These include Presidential proclamations and Executive Orders, Federal agency documents having general applicability and legal effect, documents required to be published by act of Congress, and other Federal agency documents of public interest.

Documents are on file for public inspection in the Office of the Federal Register the day before they are published, unless the issuing agency requests earlier filing. For a list of documents currently on file for public inspection, see *www.federalregister.gov.*

The seal of the National Archives and Records Administration authenticates the Federal Register as the official serial publication established under the Federal Register Act. Under 44 U.S.C. 1507, the contents of the **Federal Register** shall be judicially noticed.

The **Federal Register** is published in paper and on 24x microfiche. It is also available online at no charge as one of the databases on GPO Access, a service of the U.S. Government Printing Office.

The online edition of the **Federal Register**, *www.gpoaccess.gov/nara,* available through GPO Access, is issued under the authority of the Administrative Committee of the Federal Register as the official legal equivalent of the paper and microfiche editions (44 U.S.C. 4101 and 1 CFR 5.10). It is updated by 6 a.m. each day the **Federal Register** is published and includes both text and graphics from Volume 59, Number 1 (January 2, 1994) forward.

For more information about GPO Access, contact the GPO Access User Support Team, call toll free 1-888-293-6498; DC area 202-512-1530; fax at 202-512-1262; or via e-mail at *gpoaccess@gpo.gov.* The Support Team is available between 7:00 a.m. and 9:00 p.m. Eastern Time, Monday–Friday, except official holidays.

The annual subscription price for the **Federal Register** paper edition is $749 plus postage, or $808, plus postage, for a combined **Federal Register, Federal Register** Index and List of CFR Sections Affected (LSA) subscription; the microfiche edition of the **Federal Register** including the **Federal Register** Index and LSA is $165, plus postage. Six month subscriptions are available for one-half the annual rate. The prevailing postal rates will be applied to orders according to the delivery method requested. The price of a single copy of the daily **Federal Register,** including postage, is based on the number of pages: $11 for an issue containing less than 200 pages; $22 for an issue containing 200 to 400 pages; and $33 for an issue containing more than 400 pages. Single issues of the microfiche edition may be purchased for $3 per copy, including postage. Remit check or money order, made payable to the Superintendent of Documents, or charge to your GPO Deposit Account, VISA, MasterCard, American Express, or Discover. Mail to: U.S. Government Printing Office—New Orders, P.O. Box 979050, St. Louis, MO 63197-9000; or call toll free 1-866-512-1800, DC area 202-512-1800; or go to the U.S. Government Online Bookstore site, see *bookstore.gpo.gov.*

There are no restrictions on the republication of material appearing in the **Federal Register.**

How To Cite This Publication: Use the volume number and the page number. Example: 75 FR 12345.

Postmaster: Send address changes to the Superintendent of Documents, Federal Register, U.S. Government Printing Office, Washington, DC 20402, along with the entire mailing label from the last issue received.

SUBSCRIPTIONS AND COPIES

PUBLIC	
Subscriptions:	
Paper or fiche	**202–512–1800**
Assistance with public subscriptions	**202–512–1806**
General online information	**202–512–1530; 1–888–293–6498**
Single copies/back copies:	
Paper or fiche	**202–512–1800**
Assistance with public single copies	**1–866–512–1800 (Toll-Free)**
FEDERAL AGENCIES	
Subscriptions:	
Paper or fiche	**202–741–6005**
Assistance with Federal agency subscriptions	**202–741–6005**

Printed on recycled paper.

Contents

Federal Register

Vol. 75, No. 56

Wednesday, March 24, 2010

Agriculture Department
See Forest Service
See Rural Utilities Service
NOTICES
Agency Information Collection Activities; Proposals, Submissions, and Approvals, 14123–14124

Antitrust Division
NOTICES
National Cooperative Research and Production Act of 1993:
American Society of Mechanical Engineers, 14191
Cooperative Research Group on Diesel Aftertreatment Accelerated Aging Cycles—Heavy Duty, 14191
Cooperative Research Group on High Efficiency Dilute Gasoline Engine II, 14192
IMS Global Learning Consortium, Inc., 14191–14192
Joint Venture to Perform Project Entitled Robotic Rehabilitation of Aging Water Pipelines, 14190–14191
Joint Venture Under TIP Award; Automated Nondestructive Evaluation and Rehabilitation System for Bridge Decks, 14192

Army Department
NOTICES
Non-Exclusive, Exclusive, or Partially Exclusive Licensing:
U.S. Provisional Patent Application Concerning Medical Delivery System; Availability, 14144–14145

Centers for Disease Control and Prevention
NOTICES
Agency Information Collection Activities; Proposals, Submissions, and Approvals, 14163–14165
Statements of Organization, Functions and Delegations of Authority, 14178–14179

Centers for Medicare & Medicaid Services
NOTICES
Statement of Organization, Functions, and Delegations of Authority, 14176–14178

Civil Rights Commission
NOTICES
Meetings:
Missouri Advisory Committee, 14125

Coast Guard
RULES
Safety Zones:
March Fireworks displays within the Captain of the Port Puget Sound Area of Responsibility, 14072–14074

Commerce Department
See Foreign–Trade Zones Board
See International Trade Administration
See National Institute of Standards and Technology
See National Oceanic and Atmospheric Administration
See National Telecommunications and Information Administration
NOTICES
Agency Information Collection Activities; Proposals, Submissions, and Approvals, 14125–14126

Copyright Royalty Board
RULES
Digital Performance Right in Sound Recordings and Ephemeral Recordings for a New Subscription Service, 14074–14076

Defense Acquisition Regulations System
RULES
Defense Federal Acquisition Regulation Supplement:
Appendix A, Armed Services Board of Contract Appeals, Part 1 – Charter, 14095–14096

Defense Department
See Army Department
See Defense Acquisition Regulations System
NOTICES
Meetings:
Federal Advisory Committee; Defense Business Board (DBB), 14140–14141
Privacy Act; Systems of Records, 14141–14144

Department of Transportation
See Pipeline and Hazardous Materials Safety Administration

Drug Enforcement Administration
NOTICES
Importer of Controlled Substances; Application, 14186
Importer of Controlled Substances; Registration, 14186–14187
Importers of Controlled Substances:
Meridian Medical Technologies; Application, 14187–14188
Sigma Aldrich Manufacturing LLC; Application, 14188–14189
Manufacturer of Controlled Substances; Application, 14189–14190
Manufacturers of Controlled Substances; Application, 14190

Employee Benefits Security Administration
NOTICES
Grant of Individual Exemption:
Ford Motor Co., Detroit, MI, 14192–14205

Energy Department
See Energy Information Administration
See Federal Energy Regulatory Commission
See Southeastern Power Administration
PROPOSED RULES
Availability of the Preliminary Technical Support Document:
Energy Conservation Standards for Fluorescent Lamp Ballasts, 14319–14322
Energy Conservation Program:
Test Procedures for Fluorescent Lamp Ballasts, 14288–14319

Energy Information Administration
NOTICES
Agency Information Collection Activities; Proposals, Submissions, and Approvals, 14145–14146

Environmental Protection Agency

RULES

Approval and Promulgation of Air Quality Implementation Plans:
Illinois; NOx Budget Trading Program; Correction, 14077
Approvals and Promulgations of Implementation Plans and Designations of Areas for Air Quality Planning:
Redesignation of Crittenden County, AR Portion of Memphis, TN–Arkansas 1997 8-Hour Ozone, etc., 14077–14081
Exemption from the Requirement of a Tolerance:
Ammonium Salts of Fatty Acids (C8–C18 Saturated), 14082–14086
Mandatory Reporting of Greenhouse Gases:
Minor Harmonizing Changes to the General Provisions, 14081–14082
Pesticide Tolerances:
Clopyralid, 14086–14091
Transportation Conformity Rule PM2.5 and PM10 Amendments, 14260–14285

PROPOSED RULES

Approval of Implementation Plans of Wisconsin:
Nitrogen Oxides Reasonably Available Control Technology, 14116–14122

NOTICES

Agency Information Collection Activities; Proposals, Submissions, and Approvals:
Request for Contractor Access to TSCA CBI, 14150–14152
Executive Order 13508 Chesapeake Bay Protection and Restoration Section 502 Guidance:
Federal Land Management in the Chesapeake Bay Watershed, 14152–14153
Meetings:
National Advisory Committee for Acute Exposure Guideline Levels for Hazardous Substances, 14153–14154
Receipt of Several Pesticide Petitions Filed:
Residues of Pesticide Chemicals in or on Various Commodities, 14154–14157

Federal Aviation Administration

RULES

Amendment of Using Agency for Restricted Areas:
R–3005A, R–3305B, R–3005C, R–3005D and R–3005E; Fort Stewart, GA, 14069

NOTICES

Meetings:
Research, Engineering and Development Advisory Committee, 14243

Federal Communications Commission

RULES

Order to Deny Petitions for Reconsideration:
MVDDS Technical and Licensing Rules in the 12 GHz Band, 14094–14095

NOTICES

Agency Information Collection Activities; Proposals, Submissions, and Approvals, 14157–14158

Federal Emergency Management Agency

RULES

Final Flood Elevation Determinations, 14091–14094

NOTICES

Major Disaster Declarations:
New Jersey, 14179–14180

Federal Energy Regulatory Commission

PROPOSED RULES

Revision to Electric Reliability Organization Definition of Bulk Electric System, 14097–14103
Version One Regional Reliability Standard for Resource and Demand Balancing, 14103–14111

NOTICES

Combined Filings, 14146–14150

Federal Maritime Commission

NOTICES

Agency Information Collection Activities; Proposals, Submissions, and Approvals, 14158–14159
Agreements Filed, 14159–14160
Applicants:
Ocean Transportation Intermediary Licenses, 14160–14161
Ocean Transportation Intermediary Licenses; Reissuance, 14161

Federal Reserve System

NOTICES

Proposals to Engage in Permissible Nonbanking Activities or to Acquire Companies, etc., 14158

Food and Drug Administration

NOTICES

Medical Device Epidemiology Network:
Developing Partnership Between the Center for Devices and Radiological Health and Academia; Public Workshop, 14170–14171

Foreign Assets Control Office

NOTICES

Additional Designations, Foreign Narcotics Kingpin Designation Act, 14255–14257
Designation of Two Entities Pursuant to Executive Order (13224), 14257
Unblocking of Specially Designated National Pursuant to Executive Order (13224), 14258

Foreign–Trade Zones Board

NOTICES

Applications for Reorganization/Expansion under Alternative Site Framework:
Foreign–Trade Zone 196 – Fort Worth, TX, 14127–14128
Approvals for Manufacturing Authority:
Foreign–Trade Zone 7, CooperVision Caribbean Corp. (Contact Lenses), Juana Diaz, PR, 14128

Forest Service

NOTICES

Meetings:
Ravalli County Resource Advisory Committee, 14124–14125

Government Accountability Office

NOTICES

Meetings:
Advisory Council on Government Auditing Standards, 14161

Health and Human Services Department

See Centers for Disease Control and Prevention
See Centers for Medicare & Medicaid Services
See Food and Drug Administration
See Health Resources and Services Administration
See National Institutes of Health

See Substance Abuse and Mental Health Services Administration

Health Resources and Services Administration
NOTICES
Agency Information Collection Activities; Proposals, Submissions, and Approvals, 14165
Meetings:
Advisory Council on Blood Stem Cell Transplantation, 14175

Homeland Security Department
See Coast Guard
See Federal Emergency Management Agency
See U.S. Citizenship and Immigration Services

Interior Department
See National Park Service

International Trade Administration
NOTICES
Amended Final Determinations of Sales at Less Than Fair Value:
Diamond Sawblades and Parts Thereof from Republic of Korea, 14126–14127
Effect on Propane Consumers of Propane Education and Research Councils Operations, Market Changes and Federal Programs, 14131–14132
Meetings:
U.S. Travel and Tourism Advisory Board, 14135
Scope Rulings, 14138–14140

Justice Department
See Antitrust Division
See Drug Enforcement Administration
See Justice Programs Office
RULES
Redelegation of Authority:
Assistant Attorney General, Civil Division, to Branch Directors, Heads of Offices and United States Attorneys in Civil Division Cases, 14070–14072
NOTICES
Agency Information Collection Activities; Proposals, Submissions, and Approvals:
COPS Rural Law Enforcement National Training Assessment, 14183–14184
Proposed Consent Decrees under Comprehensive Environmental Response, Liability, and Compensation Act, 14184

Justice Programs Office
NOTICES
Agency Information Collection Activities; Proposals, Submissions, and Approvals:
Bureau of Justice Assistance Application Form; Public Safety Officers Educational Assistance, 14185–14186
International Terrorism Victim Compensation Program Application, 14184–14185

Labor Department
See Employee Benefits Security Administration

Library of Congress
See Copyright Royalty Board

Maritime Administration
NOTICES
Voluntary Intermodal Sealift Agreement, 14245–14253

National Institute of Standards and Technology
NOTICES
Availability of Funds:
Center for Nanoscale Science and Technology Postdoctoral Researcher and Visiting Fellow Measurement Science and Engineering Program, 14128–14131

National Institutes of Health
NOTICES
Agency Information Collection Activities; Proposals, Submissions, and Approvals:
The National Childrens Study, Vanguard (pilot) Study, 14165–14168
Government-Owned Inventions; Availability for Licensing, 14168–14170
Meetings:
Center for Scientific Review, 14171–14172, 14174
National Cancer Institute, 14172–14173
National Institute of Arthritis and Musculoskeletal and Skin Diseases, 14173
National Institute of Biomedical Imaging and Bioengineering, 14175
National Institute on Aging, 14174
National Institute on Drug Abuse, 14175–14176
National Library of Medicine, 14173–14174

National Oceanic and Atmospheric Administration
NOTICES
Endangered and Threatened Species:
Take of Anadromous Fish; Receipt of Applications for Scientific Research Permits, 14134–14135
Take of Anadromous Fish; Receipt and Request for Comment, 14132–14134
Pacific Coastal Salmon Recovery Fund, 14135–14138

National Park Service
NOTICES
Agency Information Collection Activities; Proposals, Submissions, and Approvals, 14180–14181
National Register of Historic Places; Notification of Pending Nominations and Related Actions, 14181–14182
National Register of Historic Places; Weekly Listing of Historic Properties, 14182–14183

National Science Foundation
NOTICES
Meetings:
Engineering Advisory Committee, 14205

National Telecommunications and Information Administration

NOTICES
Broadband Technology Opportunities Program, 14131

Nuclear Regulatory Commission
NOTICES
Agency Information Collection Activities; Proposals, Submissions, and Approvals, 14205–14206
Environmental Impact Statements; Availability, etc.:
FPL Energy Point Beach, LLC; Point Beach Nuclear Plant Units 1 and 2, 14206–14207
Virginia Electric and Power Company D/B/A/ Dominion Virginia Power, and Old Dominion Electric Cooperative, et al., 14207–14208
Exemption:
Entergy Nuclear Operations, Inc.; Pilgrim Nuclear Power Station, 14208–14209

Entergy Nuclear Operations, Inc.; Vermont Yankee Nuclear Power Station, 14209–14211
Southern California Edison; San Onofre Nuclear Generating Station (Unit 2 and Unit 3), 14211–14212
Proposed Generic Communications:
Applicability of 10 CFR Part 21 Requirements to Applicants for Standard Design Certifications, 14212–14214

Occupational Safety and Health Review Commission
NOTICES
Senior Executive Service Performance Review Board Membership, 14214

Personnel Management Office
NOTICES
Excepted Service, 14214–14216

Pipeline and Hazardous Materials Safety Administration
NOTICES
Pipeline Safety:
Girth Weld Quality Issues Due to Improper Transitioning, Misalignment, and Welding Practices, etc., 14243–14245

Postal Service
RULES
Express Mail Open and Distribute and Priority Mail Open and Distribute Changes and Updates, 14076–14077

Rural Utilities Service
NOTICES
Agency Information Collection Activities; Proposals, Submissions, and Approvals, 14124

Securities and Exchange Commission
NOTICES
Agency Information Collection Activities; Proposals, Submissions, and Approvals, 14216–14217
Self-Regulatory Organizations; Proposed Rule Changes:
Chicago Board Options Exchange, Inc., 14231–14233
Chicago Stock Exchange, Inc., 14219–14221
International Securities Exchange, LLC, 14225–14227, 14233–14234, 14236–14237
NASDAQ Stock Market LLC, 14227–14231
New York Stock Exchange LLC, 14221–14223
NYSE Amex LLC, 14223–14225, 14234–14236
NYSE Arca, Inc., 14217–14219, 14237–14243

Southeastern Power Administration
NOTICES
Proposed Rate Adjustment:
Public Forum, and Opportunities for Public Review and Comments for Georgia–Alabama–South Carolina System of Projects, 14150

State Department
PROPOSED RULES
Schedule of Fees for Consular Services, Department of State and Overseas Embassies and Consulates, 14111–14116

Substance Abuse and Mental Health Services Administration
NOTICES
Agency Information Collection Activities; Proposals, Submissions, and Approvals, 14161–14163

Surface Transportation Board
NOTICES
Acquisition and Operation Exemption:
Pacific Rim Railway Co., Inc., City of Keokuk, IA, 14243

Transportation Department
See Federal Aviation Administration
See Maritime Administration
See Pipeline and Hazardous Materials Safety Administration
See Surface Transportation Board

Treasury Department
See Foreign Assets Control Office
See United States Mint
NOTICES
Agency Information Collection Activities; Proposals, Submissions, and Approvals, 14253–14255

U.S. Citizenship and Immigration Services
NOTICES
Agency Information Collection Activities; Proposals, Submissions, and Approvals:
Form I–9 CNMI, CNMI Employment Eligibility Verification, 14179

United States Mint
NOTICES
Pricing for Bronze Medals, 14257–14258

Separate Parts In This Issue

Part II
Environmental Protection Agency, 14260–14285

Part III
Energy Department, 14288–14322

Reader Aids

Consult the Reader Aids section at the end of this page for phone numbers, online resources, finding aids, reminders, and notice of recently enacted public laws.

To subscribe to the Federal Register Table of Contents LISTSERV electronic mailing list, go to http://listserv.access.gpo.gov and select Online mailing list archives, FEDREGTOC-L, Join or leave the list (or change settings); then follow the instructions.

CFR PARTS AFFECTED IN THIS ISSUE

A cumulative list of the parts affected this month can be found in the Reader Aids section at the end of this issue.

10 CFR

Proposed Rules:

430 (2 documents) 14288, 14319

14 CFR

73.....14069

18 CFR

Proposed Rules:

40 (2 documents) 14097, 14103

22 CFR

Proposed Rules:

22.....14111

28 CFR

0.....14070

33 CFR

165.....14072

37 CFR

383.....14074

39 CFR

111.....14076

40 CFR

52 (2 documents) 14077

81.....14077

93.....14260

98.....14081

180 (2 documents) 14082, 14086

Proposed Rules:

52.....14116

44 CFR

67.....14091

47 CFR

25.....14094

48 CFR

Ch. 2.....14095

Rules and Regulations

Federal Register

Vol. 75, No. 56

Wednesday, March 24, 2010

This section of the FEDERAL REGISTER contains regulatory documents having general applicability and legal effect, most of which are keyed to and codified in the Code of Federal Regulations, which is published under 50 titles pursuant to 44 U.S.C. 1510.

The Code of Federal Regulations is sold by the Superintendent of Documents. Prices of new books are listed in the first FEDERAL REGISTER issue of each week.

DEPARTMENT OF TRANSPORTATION

Federal Aviation Administration

14 CFR Part 73

[Docket No. FAA–2010–0201; Airspace Docket No. 10–ASO–19]

RIN 2120–AA66

Amendment of Using Agency for Restricted Areas R–3005A, R–3305B, R–3005C, R–3005D and R–3005E; Fort Stewart, GA

AGENCY: Federal Aviation Administration (FAA), DOT.

ACTION: Final rule.

SUMMARY: This action changes the using agency of restricted areas R–3005A, R–3005B, R–3005C, R–3005D and R–3005E, Fort Stewart, GA, to "Commander, U.S. Army Garrison, Fort Stewart, GA." There are no changes to the boundaries; designated altitudes; time of designation; or activities conducted within the affected restricted area.

DATES: Effective date 0901 UTC, June 3, 2010. The Director of the Federal Register approves this incorporation by reference action under 1 CFR part 51, subject to the annual revision of FAA Order 7400.9 and publication of conforming amendments.

FOR FURTHER INFORMATION CONTACT: Paul Gallant, Airspace and Rules Group, Office of System Operations Airspace and AIM, Federal Aviation Administration, 800 Independence Avenue, SW., Washington, DC 20591; telephone: (202) 267–8783.

SUPPLEMENTARY INFORMATION:

History

On December 29, 2009, the U.S. Army requested that the FAA change the name of the using agency for restricted areas R–3005A, R–3005B, R–3005C, R–3005D and R–3005E at Fort Stewart, GA, to "Commander, U.S. Army Garrison, Fort Stewart, GA." This change is required due to the reorganization of the Fort Stewart Installation command structure.

The Rule

This action amends Title 14 Code of Federal Regulations (14 CFR) part 73 by amending the using agency for restricted areas R–3005A, R–3005B, R–3005C, R–3005D and R–3005E at Fort Stewart, GA to reflect current organizational management responsibilities. This is an administrative change and does not affect the boundaries, designated altitudes, or activities conducted within the restricted area; therefore, notice and public procedures under 5 U.S.C. 553(b) are unnecessary.

The FAA has determined that this action only involves an established body of technical regulations for which frequent and routine amendments are necessary to keep them operationally current. Therefore, this regulation: (1) Is not a "significant regulatory action" under Executive Order 12866; (2) is not a "significant rule" under DOT Regulatory Policies and Procedures (44 FR 11034; February 26, 1979); and (3) does not warrant preparation of a regulatory evaluation as the anticipated impact is so minimal. Since this is a routine matter that will only affect air traffic procedures and air navigation, it is certified that this rule, when promulgated, will not have a significant economic impact on a substantial number of small entities under the criteria of the Regulatory Flexibility Act.

Environmental Review

The FAA has determined that this action qualifies for categorical exclusion under the National Environmental Policy Act in accordance with 311d., FAA Order 1050.1E, Environmental Impacts: Policies and Procedures. This airspace action is an administrative change to the descriptions of the affected restricted areas to update the using agency name. It does not alter the dimensions, altitudes, or times of designation of the airspace; therefore, it is not expected to cause any potentially significant environmental impacts, and no extraordinary circumstances exist that warrant preparation of an environmental assessment.

List of Subjects in 14 CFR Part 73

Airspace, Prohibited areas, Restricted areas.

Adoption of the Amendment

■ In consideration of the foregoing, the Federal Aviation Administration amends 14 CFR part 73, as follows:

PART 73—SPECIAL USE AIRSPACE

■ 1. The authority citation for part 73 continues to read as follows:

Authority: 49 U.S.C. 106(g), 40103, 40113, 40120; E.O. 10854, 24 FR 9565, 3 CFR, 1959–1963 Comp., p. 389.

§ 73.30 [Amended]

■ 2. § 73.30 is amended as follows:

1. R–3005A Fort Stewart, GA [Amended]

Under Using agency, by removing the words "Commanding Officer, Fort Stewart, GA" and inserting the words "Commander, U.S. Army Garrison, Fort Stewart, GA."

2. R–3005B Fort Stewart, GA [Amended]

Under Using agency, by removing the words "Commanding Officer, Fort Stewart, GA" and inserting the words "Commander, U.S. Army Garrison, Fort Stewart, GA."

3. R–3005C Fort Stewart, GA [Amended]

Under Using agency, by removing the words "Commanding Officer, Fort Stewart, GA" and inserting the words "Commander, U.S. Army Garrison, Fort Stewart, GA."

4. R–3005D Fort Stewart, GA [Amended]

Under Using agency, by removing the words "Commanding Officer, Fort Stewart, GA" and inserting the words "Commander, U.S. Army Garrison, Fort Stewart, GA."

5. R–3005E Fort Stewart, GA [Amended]

Under Using agency, by removing the words "Commanding Officer, Fort Stewart, GA" and inserting the words "Commander, U.S. Army Garrison, Fort Stewart, GA."

Issued in Washington, DC, on March 17, 2010.

Edith V. Parish,

Manager, Airspace and Rules Group.

[FR Doc. 2010–6493 Filed 3–23–10; 8:45 am]

BILLING CODE 4910–13–P

DEPARTMENT OF JUSTICE

28 CFR Part 0

[Directive No. 1–10]

Redelegation of Authority of Assistant Attorney General, Civil Division, to Branch Directors, Heads of Offices and United States Attorneys in Civil Division Cases

AGENCY: Office of the Assistant Attorney General, Civil Division, Department of Justice.

ACTION: Final rule.

SUMMARY: This final rule amends Civil Directive 14–95, published in the Appendix to Subpart Y of Part 0, which sets forth the redelegation of authority by the Assistant Attorney General of the Civil Division to branch directors, heads of offices, and United States Attorneys. On May 20, 2009, the President signed the Fraud Enforcement and Recovery Act (FERA), which authorized the Attorney General to delegate his authority to issue civil investigative demands (CIDs). As a result, the Attorney General signed Order No. 3134–2010 (Jan. 15, 2010) delegating to the Assistant Attorney General for the Civil Division the Attorney General's authority to issue CIDs, and permitting that authority to be redelegated to other Department officials, including United States Attorneys. Pursuant to FERA and the Attorney General's order, the new rule would redelegate the authority of the Assistant Attorney General for the Civil Division to issue CIDs in monitored and delegated cases to United States Attorneys, with a notice and reporting requirement. The new rule also eliminates certain differences between the authorities of branch directors and United States Attorneys to file, close, or compromise Civil Division cases, revise the documentation requirements in cases delegated to the latter, and make a few "housekeeping" revisions.

DATES: *Effective Date:* This rule is effective March 24, 2010 and is applicable beginning March 8, 2010.

FOR FURTHER INFORMATION CONTACT: Joyce R. Branda, Director, Commercial Litigation Branch, Civil Division, Department of Justice, Washington, DC 20530; 202–305–2335.

SUPPLEMENTARY INFORMATION: This rule is a matter of internal Department management. It has been drafted and reviewed in accordance with section 1(b) of Executive Order 12866. The Assistant Attorney General for the Civil Division has determined that this rule is not a "significant regulatory action" under section 3(f) of Executive Order 12866 and accordingly this rule has not been reviewed by the Office of Management and Budget. In accordance with the Regulatory Flexibility Act (5 U.S.C. 605(b)), the Assistant Attorney General for the Civil Division has reviewed this rule, and by approving it certifies that this rule will not have a significant economic impact on a substantial number of small entities. This rule will not have substantial direct effects on the states, on the relationship between the national government and the states, or on the distribution of power and responsibilities among the various levels of government. Therefore, in accordance with Executive Order 13132, it is determined that this rule does not have sufficient federalism implications to warrant the preparation of a Federalism Assessment.

List of Subjects in 28 CFR Part 0

Authority delegations (Government agencies), Government employees, International agreements, Organization and functions (Government agencies), Treaties, Whistleblowing.

■ Accordingly, for the reasons stated in the preamble, title 28, chapter I, part 0, of the Code of Federal Regulations is amended as set forth below:

PART 0—ORGANIZATION OF THE DEPARTMENT OF JUSTICE

■ 1. The authority citation for part 0 continues to read as follows:

Authority: 5 U.S.C. 301; 28 U.S.C. 509, 510, 515–519.

■ 2. Appendix to Subpart Y is amended by removing Civil Directive No. 14–95 and adding Civil Directive No. 1–10, to read as follows:

Appendix to Subpart Y—Redelegations of Authority To Compromise and Close Civil Claims

* * * * *

[Directive No. 1–10]

By virtue of the authority vested in me by part 0 of title 28 of the Code of Federal Regulations, particularly §§ 0.45, 0.160, 0.164, and 0.168, it is hereby ordered as follows:

Section 1. Authority To Compromise or Close Cases and to File Suits and Claims

(a) Delegation to Deputy Assistant Attorneys General. The Deputy Assistant Attorneys General are authorized to act for, and to exercise the authority of, the Assistant Attorney General in charge of the Civil Division with respect to the institution of suits, the acceptance or rejection of compromise offers, and the closing of claims or cases, unless any such authority is required by law to be exercised by the Assistant Attorney General personally or has been specifically delegated to another Department official.

(b) Delegation to United States Attorneys, Branch, Office and Staff Directors and Attorneys-in-Charge of Field Offices. Subject to the limitations imposed by 28 CFR 0.160(c), and 0.164(a) and section 4(c) of this directive, and the authority of the Solicitor General set forth in 28 CFR 0.163,

(1) Branch, Office, and Staff Directors, and Attorneys-in-Charge of Field Offices with respect to matters assigned or delegated to their respective components are hereby delegated the authority to:

(i) Accept offers in compromise of claims on behalf of the United States in all cases in which the gross amount of the original claim does not exceed $5,000,000, so long as the difference between the gross amount of the original claim and the proposed settlement does not exceed $1,000,000;

(ii) Accept offers in compromise of, or settle administratively, claims against the United States in all cases where the principal amount of the proposed settlement does not exceed $1,000,000; and,

(iii) Reject any offers.

(2) United States Attorneys with respect to matters assigned or delegated to their respective components are hereby delegated the authority to:

(i) Accept offers in compromise of claims on behalf of the United States;

(A) In all cases in which the gross amount of the original claim does not exceed $1,000,000 and,

(B) In all cases in which the gross amount of the original claim does not exceed $5,000,000, so long as the difference between the gross amount of the original claim and the proposed settlement does not exceed $1,000,000;

(ii) Accept offers in compromise of, or settle administratively, claims against the United States in all cases where the principal amount of the proposed settlement does not exceed $1,000,000 and,

(iii) Reject any offers.

(3) With respect to claims asserted in bankruptcy proceedings, the term gross amount of the original claim in subparagraphs (1)(i) and (2)(i) of this paragraph means liquidation value. Liquidation value is the forced sale value of the collateral, if any, securing the claim(s) plus the dividend likely to be paid for the unsecured portion of the claim(s) in an actual or hypothetical liquidation of the bankruptcy estate.

(c) Subject to the limitations imposed by sections 1(e) and 4(c) of this directive, United States Attorneys, Directors, and Attorneys-in-Charge are authorized to file suits, counterclaims, and cross-claims, to close, or to take any other action necessary to protect the interests of the United States in all routine nonmonetary cases, in all routine loan collection and foreclosure cases, and in other monetary claims or cases where the gross amount of the original claim does not exceed $1,000,000. Such actions in nonmonetary cases which are other than routine will be submitted for the approval of the Assistant Attorney General, Civil Division.

(d) United States Attorneys may redelegate in writing the above-conferred compromise and suit authority to Assistant United States Attorneys who supervise other Assistant United States Attorneys who handle civil litigation.

(e) Limitations on delegations. The authority to compromise cases, file suits, counter-claims, and cross-claims, to close cases, or take any other action necessary to protect the interests of the United States, delegated by paragraphs (a) and (b) of this section, may not be exercised, and the matter shall be submitted for resolution to the Assistant Attorney General, Civil Division, when:

(1) For any reason, the proposed action, as a practical matter, will control or adversely influence the disposition of other claims totaling more than the respective amounts designated in the above paragraphs.

(2) Because a novel question of law or a question of policy is presented, or for any other reason, the proposed action should, in the opinion of the officer or employee concerned, receive the personal attention of the Assistant Attorney General, Civil Division.

(3) The agency or agencies involved are opposed to the proposed action. The views of an agency must be solicited with respect to any significant proposed action if it is a party, if it has asked to be consulted with respect to any such proposed action, or if such proposed action in a case would adversely affect any of its policies.

(4) The U.S. Attorney involved is opposed to the proposed action and requests that the matter be submitted to the Assistant Attorney General for decision.

(5) The case is on appeal, except as determined by the Director of the Appellate Staff.

Section 2. Action Memoranda

(a) Whenever, pursuant to the authority delegated by this Directive, an official of the Civil Division or a United States Attorney accepts a compromise, closes a claim or files a suit or claim, a memorandum fully explaining the basis for the action taken shall be executed and placed in the file. In the case of matters compromised, closed, or filed by United States Attorneys, a copy of the memorandum must, upon request therefrom, be sent to the appropriate Branch or Office of the Civil Division.

(b) The compromising of cases or closing of claims or the filing of suits for claims, which a United States Attorney is not authorized to approve, shall be referred to the appropriate Branch or Office within the Civil Division, for decision by the Assistant Attorney General or the appropriate authorized person within the Civil Division. The referral memorandum should contain a detailed description of the matter, the United States Attorney's recommendation, the agency's recommendation where applicable, and a full statement of the reasons therefor.

Section 3. Return of Civil Judgment Cases to Agencies

Claims arising out of judgments in favor of the United States which cannot be permanently closed as uncollectible may be returned to the referring Federal agency for servicing and surveillance whenever all conditions set forth in USAM 4–2.230 have been met.

Section 4. Authority for Direct Reference and Delegation of Civil Division Cases to United States Attorneys

(a) Direct reference to United States Attorneys by agencies. The following civil actions under the jurisdiction of the Assistant Attorney General, Civil Division, may be referred by the agency concerned directly to the appropriate United States Attorney for handling in trial courts, subject to the limitations imposed by paragraph (c) of this section. United States Attorneys are hereby delegated the authority to take all necessary steps to protect the interests of the United States, without prior approval of the Assistant Attorney General, Civil Division, or his representatives, subject to the limitations set forth in section 1(e) of this directive. Agencies may, however, if special handling is desired, refer these cases to the Civil Division. Also, when constitutional questions or other significant issues arise in the course of such litigation, or when an appeal is taken by any party, the Civil Division should be consulted.

(1) Money claims by the United States, except claims involving penalties and forfeitures, where the gross amount of the original claim does not exceed $1,000,000.

(2) Single family dwelling house foreclosures arising out of loans made or insured by the Department of Housing and Urban Development, the Department of Veterans Affairs and the Farm Service Agency.

(3) Suits to enjoin violations of, and to collect penalties under, the Agricultural Adjustment Act of 1938, 7 U.S.C. 1376, the Packers and Stockyards Act, 7 U.S.C. 203, 207(g), 213, 215, 216, 222, and 228a, the Perishable Agricultural Commodities Act, 1930, 7 U.S.C. 499c(a) and 499h(d), the Egg Products Inspection Act, 21 U.S.C. 1031 *et seq.,* the Potato Research and Promotion Act, 7 U.S.C. 2611 *et seq.,* the Cotton Research and Promotion Act of 1966, 7 U.S.C. 2101 *et seq.,* the Federal Meat Inspection Act, 21 U.S.C. 601 *et seq.,* and the Agricultural Marketing Agreement Act of 1937, as amended, 7 U.S.C. 601 *et seq.*

(4) Suits by social security beneficiaries under the Social Security Act, 42 U.S.C. 402 *et seq.*

(5) Social Security disability suits under 42 U.S.C. 423 *et seq.*

(6) Black lung beneficiary suits under the Federal Coal Mine Health and Safety Act of 1969, 30 U.S.C. 921 *et seq.*

(7) Suits by Medicare beneficiaries under 42 U.S.C. 1395ff.

(8) Garnishment actions authorized by 42 U.S.C. 659 for child support or alimony payments and actions for general debt, 5 U.S.C. 5520a.

(9) Judicial review of actions of the Secretary of Agriculture under the food stamp program, pursuant to the provisions of 7 U.S.C. 2022 involving retail food stores.

(10) Cases referred by the Department of Labor for the collection of penalties or for injunctive action under the Fair Labor Standards Act of 1938 and the Occupational Safety and Health Act of 1970.

(11) Cases referred by the Department of Labor solely for the collection of civil penalties under the Farm Labor Contractor Registration Act of 1963, 7 U.S.C. 2048(b).

(12) Cases referred by the Surface Transportation Board to enforce orders of the Surface Transportation Board or to enjoin or suspend such orders pursuant to 28 U.S.C. 1336.

(13) Cases referred by the United States Postal Service for injunctive relief under the nonmailable matter laws, 39 U.S.C. 3001 *et seq.*

(b) Delegation to United States Attorneys. Upon the recommendation of the appropriate Director, the Assistant Attorney General, Civil Division may delegate to United States Attorneys suit authority involving any claims or suits where the gross amount of the original claim does not exceed $5,000,000 where the circumstances warrant such delegations. United States Attorneys may compromise any case redelegated under this subsection in which the gross amount of the original claim does not exceed $5,000,000, so long as the difference between the gross amount of the original claim and the proposed settlement does not exceed $1,000,000. United States Attorneys may close cases redelegated to them under this subsection only upon the authorization of the appropriate authorized person within the Department of Justice. All delegations pursuant to this subsection shall be in writing and no United States Attorney shall have authority to compromise or close any such delegated case or claim except as is specified in the required written delegation or in section 1(c) of this directive. The limitations of section 1(e) of this directive also remain applicable in any case or claim delegated hereunder.

(c) Cases not covered. Regardless of the amount in controversy, the following matters normally will not be delegated to United States Attorneys for handling but will be personally or jointly handled or monitored by the appropriate Branch or Office within the Civil Division:

(1) Cases in the Court of Federal Claims.

(2) Cases within the jurisdiction of the Commercial Litigation Branch involving patents, trademarks, copyrights, etc.

(3) Cases before the United States Court of International Trade.

(4) Any case involving bribery, conflict of interest, breach of fiduciary duty, breach of employment contract, or exploitation of public office.

(5) Any fraud or False Claims Act case where the amount of single damages exceeds $1,000,000.

(6) Any case involving vessel-caused pollution in navigable waters.

(7) Cases on appeal, except as determined by the Director of the Appellate Staff.

(8) Any case involving litigation in a foreign court.

(9) Criminal proceedings arising under statutes enforced by the Food and Drug Administration, the Consumer Product Safety Commission, the Federal Trade Commission, and the National Highway Traffic Safety Administration (relating to odometer

tampering), except as determined by the Director of the Office of Consumer Litigation.

(10) Nonmonetary civil cases, including injunction suits, declaratory judgment actions, and applications for inspection warrants, and cases seeking civil penalties including but not limited to those arising under statutes enforced by the Food and Drug Administration, the Consumer Product Safety Commission, the Federal Trade Commission, and the National Highway Traffic Safety Administration (relating to odometer tampering), except as determined by the Director of the Office of Consumer Litigation.

(11) Administrative claims arising under the Federal Tort Claims Act.

Section 5. Civil Investigative Demands

Authority relating to Civil Investigative Demands issued under the False Claims Act is hereby delegated to United States Attorneys in cases that are delegated or assigned as monitored to their respective components. In accordance with guidelines provided by the Assistant Attorney General, each United States Attorney must provide notice and a report of Civil Investigative Demands issued by the United States Attorney. When a case is jointly handled by the Civil Division and a United States Attorney's Office, the Civil Division will issue a Civil Investigative Demand only after requesting the United States Attorney's recommendation.

Section 6. Adverse Decisions

All final judicial decisions adverse to the Government involving any direct reference or delegated case must be reported promptly to the Assistant Attorney General, Civil Division, attention Director, Appellate Staff. Consult title 2 of the United States Attorney's Manual for procedures and time limitations. An appeal cannot be taken without approval of the Solicitor General. Until the Solicitor General has made a decision whether an appeal will be taken, the Government attorney handling the case must take all necessary procedural actions to preserve the Government's right to take an appeal, including filing a protective notice of appeal when the time to file a notice of appeal is about to expire and the Solicitor General has not yet made a decision. Nothing in the foregoing directive affects this obligation.

Section 7. Supersession

This directive supersedes Civil Division Directive No. 14–95 regarding redelegation of the Assistant Attorney General's authority in Civil Division cases to Branch Directors, heads of offices and United States Attorneys.

Section 8. Applicability

This directive applies to all cases pending as of the date of this directive and is effective immediately.

Section 9. No Private Right of Action

This directive consists of rules of agency organization, procedure, and practice and does not create a private right of action for any private party to challenge the rules or actions taken pursuant to them.

* * * * *

Dated: March 8, 2010.

Tony West,

Assistant Attorney General, Civil Division.

[FR Doc. 2010–5816 Filed 3–23–10; 8:45 am]

BILLING CODE 4410–12–P

DEPARTMENT OF HOMELAND SECURITY

Coast Guard

33 CFR Part 165

[Docket No. USCG–2010–0143]

RIN 1625–AA00

Safety Zones; March Fireworks Displays Within the Captain of the Port Puget Sound Area of Responsibility (AOR)

AGENCY: Coast Guard, DHS.

ACTION: Temporary final rule.

SUMMARY: The U.S. Coast Guard is establishing two safety zones on the waters of Puget Sound, WA for firework displays. This action is necessary to provide for the safety of life on navigable waters during the fireworks displays. Entry into, transit through, mooring, or anchoring within these zones is prohibited unless authorized by the Captain of the Port, Puget Sound or Designated Representative.

DATES: *Effective Date:* this rule is effective in the CFR from March 24, 2010 until 12:01 a.m. March 28, 2010. This rule is effective with actual notice for purposes of enforcement beginning 7 p.m. March 6, 2010, unless canceled sooner by the Captain of the Port.

ADDRESSES: Documents indicated in this preamble as being available in the docket are part of docket USCG–2010–0143 and are available online by going to *http://www.regulations.gov,* inserting USCG–2010–0143 in the "Keyword" box, and then clicking "Search." They are also available for inspection or copying at the Docket Management Facility (M–30), U.S. Department of Transportation, West Building Ground Floor, Room W12–140, 1200 New Jersey Avenue, SE., Washington, DC 20590, between 9 a.m. and 5 p.m., Monday through Friday, except Federal holidays.

FOR FURTHER INFORMATION CONTACT: If you have questions on this temporary rule, call or e-mail ENS Ashley M. Wanzer, Waterways Management, Sector Seattle, Coast Guard; telephone 206–217–6175, e-mail *SectorSeattleWWM@uscg.mil.* If you have questions on viewing the docket, call Renee V. Wright, Program Manager, Docket Operations, telephone 202–366–9826.

SUPPLEMENTARY INFORMATION:

Regulatory Information

The Coast Guard is issuing this temporary final rule without prior notice and opportunity to comment pursuant to authority under section 4(a) of the Administrative Procedure Act (APA) (5 U.S.C. 553(b)). This provision authorizes an agency to issue a rule without prior notice and opportunity to comment when the agency for good cause finds that those procedures are "impracticable, unnecessary, or contrary to the public interest." Under 5 U.S.C. 553(b)(B), the Coast Guard finds that good cause exists for not publishing a notice of proposed rulemaking (NPRM) with respect to this rule because it is contrary to public interest to delay the effective date of this rule. Delaying the effective date by first publishing an NPRM would be contrary to the safety zone's intended objectives since immediate action is needed to protect persons and vessels against the hazards associated with fireworks displays on navigable waters. Such hazards include premature detonations, dangerous projectiles and falling or burning debris.

For the same reasons as above, under 5 U.S.C. 553(d)(3), the Coast Guard finds that good cause exists for making this rule effective less than 30 days after publication in the **Federal Register.** Due to the need for immediate action, the restriction of vessel traffic is necessary to protect life, property and the environment; therefore, a 30-day notice is impracticable. Delaying the effective date would be contrary to the safety zone's intended objectives of protecting persons and vessels involved in the event, and enhancing public and maritime safety.

Background and Purpose

Fireworks displays are frequently held from locations on or near the navigable waters of the United States. The potential hazards associated with fireworks displays are a safety concern during such events. The purpose of this rule is to promote public and maritime safety during fireworks displays, and to protect mariners transiting the area from the potential hazards associated with the fireworks displays, such as the accidental discharge of fireworks, dangerous projectiles, and falling hot embers or other debris. This rule is needed to ensure safety on the waterway during the scheduled events.

This rule will control the movement of all vessel operators in a regulated area surrounding the fireworks events indicated in this Temporary Final Rule.

Entry into these zones by all vessel operators or persons will be prohibited

unless authorized by the Captain of the Port or Designated Representative. The Captain of the Port may be assisted by other federal, state, or local agencies as needed.

Discussion of Rule

The U.S. Coast Guard is establishing temporary safety zones to allow for safe fireworks displays. A safety zone for the Farmer's 100th Anniversary will be enforced from 7 p.m. to 11:30 p.m. on March 6, 2010 on all waters in the proximity of Pier 66, Elliot Bay, WA extending to a 400 foot radius from the launch site at 47°36′31.54″ N 122°21′06.00″ W. The safety zone for the General Construction Event will be enforced from 6 p.m. to 11:30 p.m. on March 27, 2010 on all waters in the proximity of Pier 66, Elliot Bay, WA extending to a 600 foot radius from the launch site at 47°36′ 55.00″ N 122°21′05.80″ W. These safety zones do not extend onto land.

These events may result in a number of vessels congregating near fireworks launching barges. These safety zones are needed to protect watercraft and their occupants from safety hazards associated with fireworks displays. The Captain of the Port, Puget Sound may be assisted by other federal and local agencies in the enforcement of these safety zones. Vessels will be allowed to transit the waters of the Puget Sound outside the safety zone. Notification of the temporary safety zone will be provided to the public via marine information broadcasts.

Regulatory Analyses

We developed this rule after considering numerous statutes and executive orders related to rulemaking. Below we summarize our analyses based on 13 of these statutes or executive orders.

Regulatory Planning and Review

This rule is not a significant regulatory action under section 3(f) of Executive Order 12866, Regulatory Planning and Review, and does not require an assessment of potential costs and benefits under section 6(a)(3) of that Order. The Office of Management and Budget has not reviewed it under that Order. This rule is not a significant regulatory action because it is short in duration and does not affect a large area or a critical waterway.

Small Entities

Under the Regulatory Flexibility Act (5 U.S.C. 601–612), we have considered whether this rule would have a significant economic impact on a substantial number of small entities. The term "small entities" comprises small businesses, not-for-profit organizations that are independently owned and operated and are not dominant in their fields, and governmental jurisdictions with populations of less than 50,000.

The Coast Guard certifies under 5 U.S.C. 605(b) that this rule will not have a significant economic impact on a substantial number of small entities.

This temporary final rule will affect the following entities, some of which may be small entities: The owners or operators of vessels intending to transit a portion of the affected waterways while this rule is enforced. These safety zones will not have significant economic impact on a substantial number of small entities for the following reasons. This temporary rule will be in effect for short periods of time, when vessel traffic volume is low and is comprised of mostly small pleasure craft. If safe to do so, traffic will be allowed to pass through these safety zones with the permission of the Captain of the Port or Designated Representative.

Assistance for Small Entities

Under section 213(a) of the Small Business Regulatory Enforcement Fairness Act of 1996 (Pub. L. 104–121), we offer to assist small entities in understanding the rule so that they can better evaluate its effects on them and participate in the rulemaking process.

Small businesses may send comments on the actions of Federal employees who enforce, or otherwise determine compliance with, Federal regulations to the Small Business and Agriculture Regulatory Enforcement Ombudsman and the Regional Small Business Regulatory Fairness Boards. The Ombudsman evaluates these actions annually and rates each agency's responsiveness to small business. If you wish to comment on actions by employees of the Coast Guard, call 1–888–REG–FAIR (1–888–734–3247). The Coast Guard will not retaliate against small entities that question or complain about this rule or any policy or action of the Coast Guard.

Collection of Information

This rule calls for no new collection of information under the Paperwork Reduction Act of 1995 (44 U.S.C. 3501–3520).

Federalism

A rule has implications for federalism under Executive Order 13132, Federalism, if it has a substantial direct effect on State or local governments and would either preempt State law or impose a substantial direct cost of compliance on them. We have analyzed this rule under that Order and have determined that it does not have implications for federalism.

Unfunded Mandates Reform Act

The Unfunded Mandates Reform Act of 1995 (2 U.S.C. 1531–1538) requires Federal agencies to assess the effects of their discretionary regulatory actions. In particular, the Act addresses actions that may result in the expenditure by a State, local, or tribal government, in the aggregate, or by the private sector of $100,000,000 (adjusted for inflation) or more in any one year. Though this rule will not result in such an expenditure, we do discuss the effects of this rule elsewhere in this preamble.

Taking of Private Property

This rule will not cause a taking of private property or otherwise have taking implications under Executive Order 12630, Governmental Actions and Interference with Constitutionally Protected Property Rights.

Civil Justice Reform

This rule meets applicable standards in sections 3(a) and 3(b)(2) of Executive Order 12988, Civil Justice Reform, to minimize litigation, eliminate ambiguity, and reduce burden.

Protection of Children

We have analyzed this rule under Executive Order 13045, Protection of Children from Environmental Health Risks and Safety Risks. This rule is not an economically significant rule and does not create an environmental risk to health or risk to safety that may disproportionately affect children.

Indian Tribal Governments

This rule does not have tribal implications under Executive Order 13175, Consultation and Coordination with Indian Tribal Governments, because it does not have a substantial direct effect on one or more Indian tribes, on the relationship between the Federal Government and Indian tribes, or on the distribution of power and responsibilities between the Federal Government and Indian tribes.

Energy Effects

We have analyzed this rule under Executive Order 13211, Actions Concerning Regulations That Significantly Affect Energy Supply, Distribution, or Use. We have determined that it is not a "significant energy action" under that order because it is not a "significant regulatory action" under Executive Order 12866 and is not

likely to have a significant adverse effect on the supply, distribution, or use of energy. The Administrator of the Office of Information and Regulatory Affairs has not designated it as a significant energy action. Therefore, it does not require a Statement of Energy Effects under Executive Order 13211.

Technical Standards

The National Technology Transfer and Advancement Act (NTTAA) (15 U.S.C. 272 note) directs agencies to use voluntary consensus standards in their regulatory activities unless the agency provides Congress, through the Office of Management and Budget, with an explanation of why using these standards would be inconsistent with applicable law or otherwise impractical. Voluntary consensus standards are technical standards (*e.g.,* specifications of materials, performance, design, or operation; test methods; sampling procedures; and related management systems practices) that are developed or adopted by voluntary consensus standards bodies.

This rule does not use technical standards. Therefore, we did not consider the use of voluntary consensus standards.

Environment

We have analyzed this rule under Department of Homeland Security Management Directive 023–01 and Commandant Instruction M16475.lD, which guide the Coast Guard in complying with the National Environmental Policy Act of 1969 (NEPA) (42 U.S.C. 4321–4370f), and have concluded this action is one of a category of actions that do not individually or cumulatively have a significant effect on the human environment. This rule is categorically excluded, under figure 2–1, paragraph (34)(g), of the Instruction. This rule involves establishing temporary safety zones. An environmental analysis checklist and a categorical exclusion determination are available in the docket where indicated under **ADDRESSES**.

List of Subjects in 33 CFR Part 165

Harbors, Marine safety, Navigation (water), Reporting and recordkeeping requirements, Security measures, Waterways.

■ For the reasons discussed in the preamble, the Coast Guard amends 33 CFR Part 165 as follows:

PART 165—REGULATED NAVIGATION AREAS AND LIMITED ACCESS AREAS

■ 1. The authority citation for part 165 continues to read as follows:

Authority: 33 U.S.C. 1226, 1231; 46 U.S.C. Chapters 701, 3306, 3703; 50 U.S.C. 191, 195; 33 CFR 1.05–1, 6.04–1, 6.04–6, and 160.5; Pub. L. 107–295, 116 Stat. 2064; Department of Homeland Security Delegation No. 0170.1

■ 2. Add § 165.T13–132 to read as follows:

§ 165.T13–132 Safety Zones; March Fireworks displays within the Captain of the Port, Puget Sound Area of Responsibility (AOR).

(a) *Safety Zones.* The following areas are designated safety zones:

(1) *Farmer's 100th Anniversary, Elliot Bay, WA*

(i) *Location.* All waters in the proximity of Pier 66, Elliot Bay, WA in an area extending to a 400 foot radius from the launch site at 47°36′31.54″ N 122°21′06.00″ W.

(ii) *Enforcement time and date.* 7 p.m. to 11:30 p.m. on March 6, 2010.

(2) *General Construction Event, Elliot Bay, WA*

(i) *Location.* All waters in the proximity of Pier 66, Elliot Bay, WA in an area extending to a 600 foot radius from the launch site at 47°36′55.00″ N 122°21′05.80″ W.

(ii) *Enforcement time and date.* 6 p.m. to 11:30 p.m. on March 27, 2010.

(b) *Regulations.* In accordance with the general regulations in 33 CFR Part 165, Subpart C, no vessel operator may enter, transit, moor, or anchor within these safety zones, except for vessels authorized by the Captain of the Port or Designated Representative.

(c) *Authorization.* All vessel operators who desire to enter the safety zone must obtain permission from the Captain of the Port or Designated Representative by contacting either the on-scene patrol craft on VHF Ch 13 or Ch 16 or the Coast Guard Sector Seattle Joint Harbor Operations Center (JHOC) via telephone at (206) 217–6002.

(d) *Effective Period.* This rule is effective from 7 p.m. March 6, 2010 through 12:01 a.m. March 28, 2010 unless canceled sooner by the Captain of the Port.

Dated: March 5, 2010.

S.E. Englebert,

Captain, U.S. Coast Guard, Captain of the Port, Puget Sound.

[FR Doc. 2010–6445 Filed 3–23–10; 8:45 am]

BILLING CODE 9110–04–P

LIBRARY OF CONGRESS

Copyright Royalty Board

37 CFR Part 383

[Docket No. 2009–2 CRB New Subscription II]

Digital Performance Right in Sound Recordings and Ephemeral Recordings for a New Subscription Service

AGENCY: Copyright Royalty Board, Library of Congress.

ACTION: Final rule.

SUMMARY: The Copyright Royalty Judges are publishing final regulations setting the rates and terms for the use of sound recordings in transmissions made by new subscription services and for the making of ephemeral recordings necessary for the facilitation of such transmissions for the period commencing January 1, 2011, and ending on December 31, 2015.

DATES: These regulations become effective on January 1, 2011.

FOR FURTHER INFORMATION CONTACT: Richard Strasser, Senior Attorney, or Gina Giuffreda, Attorney Advisor, by telephone at (202) 707–7658 or by e-mail at *crb@loc.gov*.

SUPPLEMENTARY INFORMATION: Section 114(f)(2)(C) of the Copyright Act, title 17 of the United States Code, allows a new type of eligible nonsubscription service or a new subscription service on which sound recordings are performed that is or is about to become operational to file a petition with the Copyright Royalty Judges ("Judges") for the purpose of determining reasonable terms and rates. 17 U.S.C. 114(f)(2)(C). Section 112(e) allows the making of ephemeral reproductions for the purpose of facilitating certain digital audio transmissions, including those made by new subscription services. 17 U.S.C. 112(e). Upon receipt of a petition filed pursuant to section 114(f)(2)(C), the Judges are required to commence a proceeding to determine said reasonable terms and rates. 17 U.S.C. 804(b)(3)(C)(ii). The Judges have conducted one proceeding pursuant to these provisions. *See* 70 FR 72471, 72472 (December 5, 2005) (after receipt of petition, commencing proceeding to determine rates and terms for a new type of subscription service that "performs sound recordings on digital audio channels programmed by the licensee for transmission by a satellite television distribution service to its residential customers, where the audio channels are bundled with television

channels as part of a 'basic' package of service and not for a separate fee"). The parties to that proceeding ultimately reached an agreement on the rates and terms for the new subscription service at issue; and the Judges, after public comment, adopted the settlement as final regulations.[1] *See* 72 FR 72253 (December 20, 2007). The current rates expire on December 31, 2010.

Pursuant to section 803(b)(1)(A)(i)(III) of the Copyright Act, the Judges published in the **Federal Register** a notice commencing the rate determination proceeding for the license period 2011–2015 for the new subscription service defined in 37 CFR 383.2(h) and requesting interested parties to submit their petitions to participate. *See* 74 FR 319 (January 5, 2009). Petitions to Participate in this proceeding were received from SoundExchange, Inc.; Royalty Logic, LLC ("RLI"); and Sirius XM Radio, Inc. (Sirius XM").

The Judges set the timetable for the three-month negotiation period, *see* 17 U.S.C. 803(b)(3), and directed the participants to submit their written direct statements no later than September 29, 2009. On September 22, 2009, the Judges received a joint motion from all parties to stay the filing of the written direct statements in light of the parties reaching a settlement which they intended to submit to the Judges for adoption. On September 23, 2009, the Judges issued an order extending the deadline for the filing of written direct statements to October 29, 2009.[2]

Section 801(b)(7)(A) allows for the adoption of rates and terms negotiated by "some or all of the participants in a proceeding at any time during the proceeding" provided they are submitted to the Copyright Royalty Judges for approval. This section provides that in such event:

(i) The Copyright Royalty Judges shall provide to those that would be bound by the terms, rates, or other determination set by any agreement in a proceeding to determine royalty rates an opportunity to comment on the agreement and shall provide to participants in the proceeding under section 803(b)(2) that would be bound by the terms, rates, or other determination set by the agreement an opportunity to comment on the agreement and object to its adoption as a basis for statutory terms and rates; and

(ii) The Copyright Royalty Judges may decline to adopt the agreement as a basis for statutory terms and rates for participants that are not parties to the agreement, if any participant described in clause (i) objects to the agreement and the Copyright Royalty Judges conclude, based on the record before them if one exists, that the agreement does not provide a reasonable basis for setting statutory terms or rates.

17 U.S.C. 801(b)(7)(A). Accordingly, on January 22, 2010, the Judges published a notice seeking comment on the proposed rates and terms submitted to the Judges. 75 FR 3666. Comments were due by February 22, 2010. Having received no comments or objections to the proposed rates and terms, the Judges, by this notice, are adopting as final regulations the rates and terms for the use of sound recordings in transmissions made by new subscription services as defined in 37 CFR 383.2(h) and the making of ephemeral recordings necessary for the facilitation of such transmissions for the license period of 2011–2015 as published on January 22, 2010.

List of Subjects in 37 CFR 383

Copyright, Digital audio transmissions, Performance right, Sound recordings.

Final Regulation

■ For the reasons set forth in the preamble, the Copyright Royalty Judges are amending 37 CFR part 383 as follows:

PART 383—RATES AND TERMS FOR SUBSCRIPTION TRANSMISSIONS AND THE REPRODUCTION OF EPHEMERAL RECORDINGS BY NEW SUBSCRIPTION SERVICES

■ 1. The authority citation for part 383 continues to read as follows:

Authority: 17 U.S.C. 112(e), 114, and 801(b)(1).

§ 383.1 [Amended]

■ 2. Amend § 383.1 as follows:
■ a. In paragraph (a), by removing "2010" and adding in its place "2015"; and
■ b. In paragraph (b), by removing "112" and adding in its place "112(e)".

§ 383.2 [Amended]

■ 3. Amend § 383.2 as follows:
■ a. In paragraph (d), by removing "2010" and adding in its place "2015"; and
■ b. In paragraph (e), by removing "112" and adding in its place "112(e)".

■ 4. Amend § 383.3 as follows:
■ a. In paragraph (a) introductory text, by removing "112" and adding in its place "112(e)" and by adding "during the License Period," after "such transmissions,";
■ b. In paragraph (a)(1)(ii)(E), by removing "and";
■ c. By adding new paragraphs (a)(1)(ii)(F) through (J);
■ d. By adding new paragraphs (a)(2)(ii)(F) through (J);
■ e. In paragraph (b), by removing "112" and adding in its place "112(e)"; and
■ f. By adding a new paragraph (c).

The additions to § 383.3 read as follows:

§ 383.3 Royalty fees for public performances of sound recordings and the making of ephemeral recordings.

(a) * * *
(1) * * *
(ii) * * *
(F) 2011: $0.0155
(G) 2012: $0.0159
(H) 2013: $0.0164
(I) 2014: $0.0169
(J) 2015: $0.0174 and
(2) * * *
(ii) * * *
(F) 2011: $0.0258
(G) 2012: $0.0265
(H) 2013: $0.0273
(I) 2014: $0.0281
(J) 2015: $0.0290

* * * * *

(c) *Ephemeral recordings.* The royalty payable under 17 U.S.C. 112(e) for the making of phonorecords used by the Licensee solely to facilitate transmissions during the License Period for which it pays royalties as and when provided in this part shall be included within, and constitute 5% of, such royalty payments.

■ 5. Revise § 383.4 to read as follows:

§ 383.4 Terms for making payment of royalty fees.

(a) *Terms in general.* Subject to the provisions of this section, terms governing timing and due dates of royalty payments to the Collective, late fees, statements of account, audit and verification of royalty payments and distributions, cost of audit and verification, record retention requirements, treatment of Licensees' confidential information, distribution of royalties by the Collective, unclaimed funds, designation of the Collective, and any definitions for applicable terms not defined herein and not otherwise inapplicable shall be those adopted by the Copyright Royalty Judges for subscription transmissions and the reproduction of ephemeral recordings by preexisting satellite digital audio radio services in 37 CFR part 382, subpart B of this chapter, for the license period 2007–2012. For purposes of this

[1] The new subscription service is defined at 37 CFR 383.2(h).

[2] SoundExchange and Sirius XM also moved that the Judges stay further proceedings until the settlement process under 17 U.S.C. 801(b)(7)(A) has been completed. They noted that RLI, the only other participant to the proceeding but not a signatory to the settlement, joined the request for stay. The Judges granted the motion. See Order on Joint Motion to Stay, Docket No. 2009–2 CRB New Subscription II (October 28, 2009).

section, the term "Collective" refers to the collection and distribution organization that is designated by the Copyright Royalty Judges. For the License Period through 2015, the sole Collective is SoundExchange, Inc.

(b) *Reporting of performances.* Without prejudice to any applicable notice and recordkeeping provisions, statements of account shall not require reports of performances.

(c) *Applicable regulations.* To the extent not inconsistent with this part, all applicable regulations, including part 370 of this chapter, shall apply to activities subject to this part.

Dated: March 19, 2010.

James Scott Sledge,

Chief U.S. Copyright Royalty Judge.

[FR Doc. 2010–6451 Filed 3–23–10; 8:45 am]

BILLING CODE 1410–72–P

POSTAL SERVICE

39 CFR Part 111

Express Mail Open and Distribute and Priority Mail Open and Distribute Changes and Updates

AGENCY: Postal Service ™.

ACTION: Final rule.

SUMMARY: The Postal Service is revising *Mailing Standards of the United States Postal Service,* Domestic Mail Manual (DMM®) 705.16 to reflect changes and updates for Express Mail® Open and Distribute and Priority Mail® Open and Distribute to improve efficiencies in processing and to control costs.

DATES: *Effective Date:* April 5, 2010.

FOR FURTHER INFORMATION CONTACT: Karen Key, 202–268–7492 or Garry Rodriguez, 202–268–7281.

SUPPLEMENTARY INFORMATION: On January 29, 2010, the Postal Service published a **Federal Register** proposed rule (75 FR 4741–4742) inviting comments on a revision to change the standards for Express Mail Open and Distribute and Priority Mail Open and Distribute shipments, to discontinue the use of Label 23 and facsimile Tags 190 and 161, and to update the mailing standards. After reviewing the comments, and upon further consideration of the proposed revisions, the Postal Service adopts the proposed rule with minor revisions.

Comments

The Postal Service received five comments:

1. One commenter expressed concern about discontinuing the use of Label 23 and suggested tray boxes to accommodate EMM trays. The Postal Service introduced tray boxes to address Open and Distribute customers' concerns on the security of their mail in a letter tray during processing. The current tray box sizes were a result of customer feedback. The decision to discontinue Label 23 supports our goal to provide a secure method for Open and Distribute containers.

2. One commenter recommended changes to the tray boxes. The Postal Service has determined that this suggestion is outside the scope of this final rule.

3. One commenter questioned discontinuing the optional use of facsimile Tag 190. The Postal Service's decision to standardize the tags and to discontinue the optional use of facsimile Tags 190 and 161 was made to ensure visibility of the product for accurate and efficient processing of Open and Distribute containers. In response to customer needs, the Postal Service is investigating the production of a self-adhesive Tag 190 for DDU shipments made in USPS®-supplied Flat Rate Boxes and envelopes. Customers will be notified of the new self-adhesive Tag 190 when it becomes available.

4. One internal commenter brought to our attention that under authorization, Open and Distribute containers were allowed to be presented sealed. This exception was incorporated into the final rule.

5. One commenter questioned the 70 pound weight limit. The Postal Service has determined that this is outside the scope of this final rule.

Summary

With the introduction of tray boxes, Label 23, once used to identify letter-size trays, is no longer needed, and the Postal Service is discontinuing its use. Customers now have the option to place their trays in either sacks or Open and Distribute tray boxes. The Open and Distribute tray boxes are provided free of charge by the Postal Service to all Open and Distribute customers and are available for both half-size and full-size trays.

The Postal Service also discontinues the optional use of facsimile Tags 190 and 161. Customers must use the USPS-supplied tags which are easy to identify.

Additionally, the Postal Service is updating the mailing standards to reflect Open and Distribute containers must not exceed the 70-pound weight limit and that PS Form 3152, *Confirmation Services Certification,* must be submitted with each mailing. The Postal Service also updates the mailing standards to clarify that Open and Distribute containers must be presented unsealed, unless accepted under an alternate procedure authorized by Business Mailer Support.

The Postal Service adopts the following changes to *Mailing Standards of the United States Postal Service,* Domestic Mail Manual (DMM), which is incorporated by reference in the Code of Federal Regulations. See 39 CFR 111.1.

List of Subjects in 39 CFR Part 111

Administrative practice and procedure, Postal Service.

PART 111—[AMENDED]

■ 1. The authority citation for 39 CFR Part 111 continues to read as follows:

Authority: 5 U.S.C. 552(a); 39 U.S.C. 101, 401, 403, 404, 414, 416, 3001–3011, 3201–3219, 3403–3406, 3621, 3622, 3626, 3632, 3633, and 5001.

■ 2. Revise the following sections of *Mailing Standards of the United States Postal Service,* Domestic Mail Manual (DMM) as follows:

* * * * *

700 Special Standards

* * * * *

705 Advanced Preparation and Special Postage Payment Systems

* * * * *

16.0 Express Mail Open and Distribute and Priority Mail Open and Distribute

16.1 Prices and Fees

16.1.1 Basis of Price

[Add new second sentence to 16.1.1 to clarify the maximum weight as follows:]

* * * The maximum weight for each container is 70 pounds. * * *

* * * * *

16.1.5 Payment Method

[Revise the third sentence of 16.1.5 to eliminate Label 23 as follows:]

* * * Priority Mail postage must be affixed to or hand-stamped on green Tag 161, pink Tag 190, to the Open and Distribute tray box, or be part of the address label.

* * * * *

16.5 Preparation

16.5.1 Containers for Expedited Transport

Acceptable containers for expedited transport are as follows:

* * * * *

[Revise item B to remove the reference to label 23 as follows:]

b. A Priority Mail Open and Distribute shipment must be contained in either a USPS-approved sack using Tag 161 or Tag 190 or a USPS-provided Priority Mail Open and Distribute tray box (Tag 161 and 190 are not required for tray boxes, only the 4x6 address label should be applied), except as provided in 16.5.1c and 16.5.1d.

* * * * *

16.5.4 Tags 161 and 190—Priority Mail Open and Distribute

[Revise the first sentence of the introductory paragraph of 16.5.4 to remove the optional use of facsimiles as follows:]

Tag 161 and Tag 190 provide a place to affix Priority Mail postage and the address label for the destination facility. * * *

* * * * *

[Revise the second sentence in 16.5.4b to remove the option of a facsimile to read as follows:]

b. * * * This tag also must be affixed to containers used for Priority Mail Open and Distribute shipments prepared under 16.5.1c or 16.5.1d.

[Revise heading of 16.5.5 to read as follows:]

16.5.5 Tray Boxes—Express Mail Open and Distribute and Priority Mail Open and Distribute

[Revise 16.5.5 to read as follows:]

As an alternative to sacks for Express Mail Open and Distribute and Priority Mail Open and Distribute shipments, unless prepared under 16.5.1c or 16.5.1d, mailers may use USPS-supplied tray boxes for this service. Mailers must place a 1-foot or 2-foot letter tray into the appropriate size tray box.

16.5.6 Address Labels

[Revise the first sentence of 16.5.6 by removing Label 23 as follows:]

In addition to Tag 157, Tag 161, or Tag 190, USPS-supplied containers and envelopes and mailer-supplied containers used for Express Mail Open and Distribute or Priority Mail Open and Distribute must bear an address label that states "OPEN AND DISTRIBUTE AT:" followed by the facility name. * * *

* * * * *

16.6 Enter and Deposit

[Revise the heading of 16.6.1 to read as follows:]

16.6.1 Verification

[Delete the second sentence in 16.6.1 and add new second sentence as follows:]

* * * Open and Distribute containers must not be sealed until the BMEU verification and acceptance of the contents has been completed, unless accepted under an alternate procedure authorized by Business Mailer Support.

[Add new 16.6.2, Entry, as follows:]

16.6.2 Entry

A PS Form 3152, *Confirmation Services Certification,* must accompany each shipment. Mailers must present shipments to the BMEU with enough time for acceptance, processing, and dispatch before the facility's critical entry time for Express Mail or Priority Mail.

* * * * *

We will publish an appropriate amendment to 39 CFR Part 111 to reflect these changes.

Stanley F. Mires,

Chief Counsel, Legislative.

[FR Doc. 2010–6102 Filed 3–23–10; 8:45 am]

BILLING CODE 7710–12–P

ENVIRONMENTAL PROTECTION AGENCY

40 CFR Part 52

[EPA–R05–OAR–2009–0964; FRL–9129–9]

Approval and Promulgation of Air Quality Implementation Plans; Illinois; NO_X Budget Trading Program; Correction

AGENCY: Environmental Protection Agency (EPA).

ACTION: Final rule; correction.

SUMMARY: This document contains technical corrections to the final regulations, which were published in the **Federal Register** on Monday, March 1, 2010. The regulations related to terminating the provisions of the Nitrogen Oxides (NO_X) Budget Trading Program that apply to electric generating units (EGUs) in Illinois.

DATES: *Effective Date:* This correction is effective on April 30, 2010.

FOR FURTHER INFORMATION CONTACT: John Summerhays, Environmental Scientist, Criteria Pollutant Section, Air Programs Branch (AR–18J), Environmental Protection Agency, Region 5, 77 West Jackson Boulevard, Chicago, Illinois 60604, (312) 886–6067, *summerhays.john@epa.gov.*

SUPPLEMENTARY INFORMATION: This document provides a technical correction to the direct final regulation published at 75 FR 9103, March 1, 2010. The final regulation that is the subject of this correction is effective on April 30, 2010, and approves the sunset of 35 Illinois Administrative Code (IAC) 217 Subpart W as incorporated into 40 CFR Part 52. The revision to the Illinois State Implementation Plan terminates the provisions of the NO_X Budget Trading Program that apply to EGUs.

Correction

As published, the final regulations contained an error which may prove to be misleading and needs to be clarified. The direct final rule in 75 FR 9103 inadvertently stated that 40 CFR 52.740 was being amended, but the actual section being amended is 40 CFR 52.720.

Accordingly, the following correction is made to the final rule published March 1, 2010, (75 FR 9103).

1. On page 9105, in the third column, amendatory instruction 2 is corrected to read as follows:

"2. Section 52.720 is amended by adding paragraph (c)(185), to read as follows:"

Dated: March 12, 2010.

Tinka G. Hyde,

Acting Regional Administrator, Region 5.

[FR Doc. 2010–6474 Filed 3–23–10; 8:45 am]

BILLING CODE 6560–50–P

ENVIRONMENTAL PROTECTION AGENCY

40 CFR Parts 52 and 81

[EPA–R06–OAR–2009–0202; FRL–9129–2]

Approval and Promulgation of Implementation Plans and Designation of Areas for Air Quality Planning Purposes; Arkansas; Redesignation of the Crittenden County, AR Portion of the Memphis, Tennessee-Arkansas 1997 8-Hour Ozone Nonattainment Area to Attainment

AGENCY: Environmental Protection Agency (EPA).

ACTION: Final rule.

SUMMARY: EPA is taking final action to approve a request submitted on February 24, 2009, from the State of Arkansas to redesignate the Arkansas portion of the bi-state Memphis, Tennessee-Arkansas 8-hour ozone nonattainment area (hereafter referred to

as the "bi-state Memphis Area") to attainment for the 1997 8-hour ozone national ambient air quality standards (NAAQS). The bi-state Memphis 1997 8-hour ozone NAAQS nonattainment area is composed of Crittenden County, Arkansas and Shelby County, Tennessee. EPA's approval of the redesignation request is based on the determination that the bi-state Memphis Area has met the criteria for redesignation to attainment set forth in the Clean Air Act (CAA), including the determination that the bi-state Memphis Area has attained the 1997 8-hour ozone standard. Additionally, EPA is approving a revision to the Arkansas State Implementation Plan (SIP) including the 1997 8-hour ozone maintenance plan for Crittenden County, Arkansas that contains the new 2006 and 2021 motor vehicle emission budgets (MVEBs) for nitrogen oxides (NO_X) and volatile organic compounds (VOC) for Crittenden County, Arkansas. The State of Tennessee has submitted a similar redesignation request and maintenance plan for the Tennessee portion of this 1997 8-hour ozone area. EPA has taken action on Tennessee's redesignation request, emissions inventory and maintenance plan through a separate rulemaking action (75 FR 56). On March 12, 2008, EPA issued a revised 8-hour ozone standard. EPA later announced on September 16, 2009, that it may reconsider this revised ozone standard. The current action, however, is being taken to address requirements under the 1997 8-hour ozone NAAQS. Requirements for the bi-state Memphis Area under the 2008 standard will be addressed in the future.

DATES: *Effective Date:* This rule will be effective April 23, 2010.

ADDRESSES: EPA has established a docket for this action under Docket Identification No. EPA–R06–OAR–2009–0202. All documents in the docket are listed on the *http://www.regulations.gov* Web site. Although listed in the index, some information is not publicly available, *i.e.,* Confidential Business Information or other information whose disclosure is restricted by statute. Certain other material, such as copyrighted material, is not placed on the Internet and will be publicly available only in hard copy form. Publicly available docket materials are available either electronically through www.regulations.gov or in hard copy at the Air Planning Section, Air Planning Branch, Multimedia Planning and Permitting Division, U.S. Environmental Protection Agency, Region 6, 1445 Ross Avenue, Suite 1200, Dallas, Texas 75202–2733. EPA requests that if at all possible, you contact the person listed in the **FOR FURTHER INFORMATION CONTACT** section to schedule your inspection. The Regional Office's official hours of business are Monday through Friday, 8:30 to 4:30, excluding federal holidays.

FOR FURTHER INFORMATION CONTACT: Jeffrey Riley, Air Planning Section, Air Planning Branch, Multimedia Planning and Permitting Division, U.S. Environmental Protection Agency, Region 6, 1445 Ross Avenue, Suite 1200, Dallas, Texas 75202–2733. Mr. Riley may be reached by phone at (214) 665–8542 or via electronic mail at *riley.jeffrey@epa.gov.*

SUPPLEMENTARY INFORMATION:

Table of Contents

I. What Is the Background for the Actions?
II. What Actions Is EPA Taking?
III. Why Is EPA Taking These Actions?
IV. What Are the Effects of These Actions?
V. Final Action
VI. Statutory and Executive Order Reviews

I. What Is the Background for the Actions?

On February 24, 2009, the State of Arkansas submitted a request to redesignate Crittenden County, Arkansas (as part of the bi-state Memphis Area) to attainment for the 1997 8-hour ozone standard, and for EPA approval of the Arkansas SIP revision containing a maintenance plan for Crittenden County, Arkansas. In an action published on January 14, 2010 (75 FR 2091), EPA proposed to approve the redesignation of Crittenden County, Arkansas (as part of the bi-state Memphis Area) to attainment. EPA also proposed approval of Arkansas' plan for maintaining the 1997 8-hour NAAQS as a SIP revision, and proposed to approve the NO_X and VOC MVEBs for Crittenden County that were contained in the maintenance plan. In the January 14, 2010, proposed action, EPA also provided information on the status of its transportation conformity adequacy determination for the Crittenden County NO_X and VOC MVEBs. EPA received no comments on the January 14, 2010, proposal. Additionally, in a separate notice, EPA has already found the NOx and VOC MVEBs, as contained in Arkansas' maintenance plan for Crittenden County, adequate for the purposes of transportation conformity. The MVEBs included in the maintenance plan area as follows:

TABLE 1—CRITTENDEN COUNTY VOC AND NO_X MVEBS

[Summer season tons per day]

Year	2006	2021
NO_X	6.27	1.84
VOC	2.95	1.39

EPA's adequacy public comment period on these MVEBs (as contained in Arkansas' submittal) began on March 11, 2009, and closed on April 10, 2009. No comments were received during EPA's adequacy public comment period. In a letter dated April 20, 2009, EPA informed the State of Arkansas of its intent to make an affirmative adequacy determination for the MVEBs contained in this maintenance plan for Crittenden County, Arkansas. On May 7, 2009 (74 FR 21356), EPA published a **Federal Register** notice deeming the MVEBs for Crittenden County, Arkansas adequate for transportation conformity purposes. EPA provided a separate adequacy posting for the MVEBs in association with Shelby County, Tennessee. The Shelby County, Tennessee MVEBs (in association with the bi-state Memphis Area) were found adequate through a separate action published November 12, 2009 (74 FR 58277). This action approves the NO_X and VOC budgets in Table 1 for Crittenden County.

As was discussed in greater detail in the January 14, 2010, proposal, this redesignation is for the 1997 8-hour ozone designations finalized in April 30, 2004 (69 FR 23857). Various aspects of EPA's Phase 1 8-hour ozone implementation rule were challenged in court and on December 22, 2006, the U.S. Court of Appeals for the District of Columbia Circuit (DC Circuit Court) vacated EPA's Phase 1 Implementation Rule for the 8-hour Ozone Standard. (69 FR 23951, April 30, 2004). *South Coast Air Quality Management Dist. (SCAQMD)* v. *EPA,* 472 F.3d 882 (DC Cir. 2006). On June 8, 2007, in response to several petitions for rehearing, the DC Circuit Court clarified that the Phase 1 Rule was vacated only with regard to those parts of the Rule that had been successfully challenged. Therefore, the Phase 1 Rule provisions related to classifications for areas currently classified under subpart 2 of title I, part D of the CAA as 8-hour nonattainment areas, the 8-hour attainment dates and the timing for emissions reductions needed for attainment of the 8-hour ozone NAAQS, remain effective. The June 8th decision left intact the Court's rejection of EPA's reasons for implementing the 8-hour standard in certain nonattainment areas under subpart 1 in lieu of subpart 2. By

limiting the vacatur, the Court let stand EPA's revocation of the 1-hour standard and those anti-backsliding provisions of the Phase 1 Rule that had not been successfully challenged. The June 8th decision affirmed the December 22, 2006, decision that EPA had improperly failed to retain measures required for 1-hour nonattainment areas under the anti-backsliding provisions of the regulations: (1) Nonattainment area New Source Review requirements based on an area's 1-hour nonattainment classification; (2) Section 185 penalty fees for 1-hour severe or extreme nonattainment areas; and (3) measures to be implemented pursuant to section 172(c)(9) or 182(c)(9) of the CAA, on the contingency of an area not making reasonable further progress toward attainment of the 1-hour NAAQS, or for failure to attain that NAAQS.

As set forth in the January 14, 2010, proposal for the redesignation of Crittenden County, Arkansas, EPA does not believe that the Court's rulings alter any requirements relevant to this redesignation action so as to preclude redesignation, and do not prevent EPA from finalizing this redesignation. EPA believes that the Court's December 22, 2006, and June 8, 2007, decisions impose no impediment to moving forward with redesignation of Crittenden County, Arkansas to attainment. Even in light of the Court's decisions, redesignation is appropriate under the relevant redesignation provisions of the CAA and longstanding policies regarding redesignation requests.

II. What Actions Is EPA Taking?

EPA is taking final action to approve Arkansas' redesignation request and to change the legal designation of Crittenden County, Arkansas from nonattainment to attainment for the 1997 8-hour ozone NAAQS. The bi-state Memphis 1997 8-hour ozone NAAQS nonattainment area is composed of Crittenden County, Arkansas and Shelby County, Tennessee. The redesignation request, maintenance plan and emission inventory in association with the Tennessee portion of this Area have been addressed through a separate, but coordinated action (75 FR 56). In this action, EPA is also approving Arkansas' 1997 8-hour ozone maintenance plan for Crittenden County, Arkansas (such approval being one of the CAA criteria for redesignation to attainment status). The maintenance plan is designed to help keep Crittenden County, Arkansas (as part of the bi-state Memphis Area) in attainment for the 1997 8-hour ozone NAAQS through 2021. These approval actions are based on EPA's determination that Arkansas has demonstrated that Crittenden County, Arkansas has met the criteria for redesignation to attainment specified in the CAA, including a demonstration that the bi-state Memphis Area has attained the 1997 8-hour ozone standard. EPA's analyses of Arkansas' 1997 8-hour ozone redesignation request and maintenance plan are described in detail in the proposed rule published January 14, 2010 (75 FR 2091).

Consistent with the CAA, the maintenance plan that EPA is approving also includes 2006 and 2021 MVEBs for NOx and VOC for Crittenden County, Arkansas. In this action, EPA is approving these NOx and VOC MVEBs for the purposes of transportation conformity. For regional emission analysis years that involve years prior to 2021, the new 2006 MVEB are the applicable budgets (for the purpose of conducting transportation conformity analyses). For regional emission analysis years that involve the year 2021 and beyond, the applicable budgets, for the purpose of conducting transportation conformity analyses, are the new 2021 MVEB.

III. Why Is EPA Taking These Actions?

EPA has determined that the bi-state Memphis Area has attained the 1997 8-hour ozone standard and has also determined that Arkansas has demonstrated that all other criteria for the redesignation of Crittenden County, Arkansas (as part of the bi-state Memphis Area) from nonattainment to attainment of the 1997 8-hour ozone NAAQS have been met. See, section 107(d)(3)(E) of the CAA. EPA is also taking final action to approve the maintenance plan for Crittenden County, Arkansas as meeting the requirements of sections 175A and 107(d) of the CAA. Furthermore, EPA is approving the new NO_X and VOC MVEBs for the years 2006 and 2021 contained in Arkansas' maintenance plan for Crittenden County because these MVEBs are consistent with maintenance for the bi-state Memphis Area. In the January 14, 2010, proposal to redesignate Crittenden County, Arkansas (as part of the bi-state Memphis Area), EPA described the applicable criteria for redesignation to attainment and its analysis of how those criteria have been met. The rationale for EPA's findings and actions is set forth in the proposed rulemaking and summarized in this final rulemaking.

IV. What Are the Effects of These Actions?

Approval of the redesignation request changes the legal designation of Crittenden County, Arkansas (as part of the bi-state Memphis Area) from nonattainment to attainment for the 1997 8-hour ozone NAAQS, found at 40 CFR part 81. The approval also incorporates into the Arkansas SIP a plan for maintaining the 1997 8-hour ozone NAAQS in the bi-state Memphis Area through 2021. The maintenance plan includes contingency measures to remedy future violations of the 1997 8-hour ozone NAAQS, and establishes NOx and VOC MVEBs for the years 2006 and 2021 for Crittenden County, Arkansas. The other portion of the bi-state Memphis Area is Shelby County, Tennessee. EPA has taken action on Tennessee's redesignation request for Shelby County, Tennessee (as part of the bi-state Memphis area) and the associated emissions inventory and maintenance plan through a separate rulemaking action (75 FR 56).

V. Final Action

After evaluating Arkansas' redesignation request, EPA is taking final action to approve the redesignation and change the legal designation of Crittenden County, Arkansas (as part of the bi-state Memphis Area) from nonattainment to attainment for the 1997 8-hour ozone NAAQS. EPA has addressed the redesignation request, emission inventory and maintenance plan for Shelby County, Tennessee (as a portion of the bi-state Memphis Area) in a separate but coordinated action. Through this action, EPA is also approving into the Arkansas SIP, the 1997 8-hour ozone maintenance plan for Crittenden County, Arkansas, which includes the new NO_X MVEBs of 6.27 tons per day (tpd) for 2006, and 1.84 tpd for 2021; and new VOC MVEBs of 2.95 tpd for 2006, and 1.39 tpd for 2021. These new MVEBs were found adequate through a previous action (74 FR 21356). Within 24 months from the effective date of EPA's adequacy finding for the MVEBs, the transportation partners will need to demonstrate conformity to the new NO_X and VOC MVEBs pursuant to 40 CFR 93.104(e).

VI. Statutory and Executive Order Reviews

Under the Clean Air Act, the Administrator is required to approve a SIP submission that complies with the provisions of the Act and applicable Federal regulations. 42 U.S.C. 7410(k); 40 CFR 52.02(a). Thus, in reviewing SIP submissions, EPA's role is to approve state choices, provided that they meet the criteria of the Clean Air Act. Accordingly, this action merely approves state law as meeting Federal requirements and does not impose

additional requirements beyond those imposed by state law. For that reason, this action:

- Is not a "significant regulatory action" subject to review by the Office of Management and Budget under Executive Order 12866 (58 FR 51735, October 4, 1993);
- Does not impose an information collection burden under the provisions of the Paperwork Reduction Act (44 U.S.C. 3501 *et seq.*);
- Is certified as not having a significant economic impact on a substantial number of small entities under the Regulatory Flexibility Act (5 U.S.C. 601 *et seq.*);
- Does not contain any unfunded mandate or significantly or uniquely affect small governments, as described in the Unfunded Mandates Reform Act of 1995 (Pub. L. 104–4);
- Does not have Federalism implications as specified in Executive Order 13132 (64 FR 43255, August 10, 1999);
- Is not an economically significant regulatory action based on health or safety risks subject to Executive Order 13045 (62 FR 19885, April 23, 1997);
- Is not a significant regulatory action subject to Executive Order 13211 (66 FR 28355, May 22, 2001);
- Is not subject to requirements of Section 12(d) of the National Technology Transfer and Advancement Act of 1995 (15 U.S.C. 272 note) because application of those requirements would be inconsistent with the Clean Air Act; and
- Does not provide EPA with the discretionary authority to address, as appropriate, disproportionate human health or environmental effects, using practicable and legally permissible methods, under Executive Order 12898 (59 FR 7629, February 16, 1994).

In addition, this rule does not have tribal implications as specified by Executive Order 13175 (65 FR 67249, November 9, 2000), because the SIP is not approved to apply in Indian country located in the state, and EPA notes that it will not impose substantial direct costs on tribal governments or preempt tribal law.

The Congressional Review Act, 5 U.S.C. 801 *et seq.,* as added by the Small Business Regulatory Enforcement Fairness Act of 1996, generally provides that before a rule may take effect, the agency promulgating the rule must submit a rule report, which includes a copy of the rule, to each House of the Congress and to the Comptroller General of the United States. EPA will submit a report containing this action and other required information to the U.S. Senate, the U.S. House of Representatives, and the Comptroller General of the United States prior to publication of the rule in the **Federal Register.** A major rule cannot take effect until 60 days after it is published in the **Federal Register.** This action is not a "major rule" as defined by 5 U.S.C. 804(2).

Under section 307(b)(1) of the Clean Air Act, petitions for judicial review of this action must be filed in the United States Court of Appeals for the appropriate circuit by May 24, 2010. Filing a petition for reconsideration by the Administrator of this final rule does not affect the finality of this action for the purposes of judicial review nor does it extend the time within which a petition for judicial review may be filed, and shall not postpone the effectiveness of such rule or action. This action may not be challenged later in proceedings to enforce its requirements. (*See* section 307(b)(2).)

List of Subjects

40 CFR Part 52

Environmental protection, Air pollution control, Intergovernmental relations, Incorporation by reference, Nitrogen oxides, Ozone, Reporting and recordkeeping requirements, Volatile organic compounds.

40 CFR Part 81

Environmental protection, Air pollution control, National parks, Wilderness areas.

Dated: March 12, 2010.

Al Armendariz,

Regional Administrator, Region 6.

■ 40 CFR parts 52 and 81 are amended as follows:

PART 52—[AMENDED]

■ 1. The authority citation for part 52 continues to read as follows:

Authority: 42 U.S.C. 7401 *et seq.*

Subpart E—Arkansas

■ 2. In § 52.170(e) the third table is amended by revising the table heading and column headings; and by adding a new entry at the end of the table for "8-Hour Ozone Maintenance Plan for Crittenden County, Arkansas" to read as follows:

§ 52.170 Identification of plan.

* * * * *

(e) * * *

* * * * *

EPA-APPROVED NON-REGULATORY PROVISIONS AND QUASI-REGULATORY MEASURES IN THE ARKANSAS SIP

Name of SIP provision	Applicable geographic or nonattainment area	State submittal/ effective date	EPA approval date	Explanation
*	*	*	*	*
8-Hour Ozone Maintenance plan for the Crittenden County, Arkansas Area.	Crittenden, Shelby County.	2/26/2009	3/24/2010 [Insert *FR* page where document begins].	

PART 81—[AMENDED]

■ 1. The authority citation for part 81 continues to read as follows:

Authority: 42 U.S.C. 7401 *et seq.*

■ 2. In § 81.304, the table entitled "Arkansas—Ozone (8-Hour Standard)" is amended by revising the entry for "Memphis, TN-AR: (AQCR Metropolitan Memphis Interstate) Crittenden County," to read as follows:

§ 81.304 Arkansas.

* * * * *

ARKANSAS—OZONE

[8-Hour standard]

Designated area	Designation [a]		Category/classification	
	Date [1]	Type	Date [1]	Type
* * *	*	*	*	*
Memphis, TN-AR: (AQCR Metropolitan Memphis Interstate) Crittenden County.	(3)	Attainment	(3)	
* * *	*	*	*	*

[a] Includes Indian Country located in each county or area, except as otherwise specified.
[1] This date is June 15, 2004, unless otherwise noted.
[2] April 28, 2008.
[3] April 23, 2010.

* * * * *

[FR Doc. 2010–6343 Filed 3–23–10; 8:45 am]

BILLING CODE 6560–50–P

ENVIRONMENTAL PROTECTION AGENCY

40 CFR Part 98

[EPA–HQ–OAR–2008–0508; FRL–9127–6]

RIN 2060–AQ15

Mandatory Reporting of Greenhouse Gases: Minor Harmonizing Changes to the General Provisions

Correction

In rule document 2010–5695 beginning on page 12451 in the issue of March 16, 2010, on pages 12457 and 12458, in Subpart A, the following tables are being corrected to read as set forth below:

Subpart A [Corrected]

TABLE A–3 OF SUBPART A—SOURCE CATEGORY LIST FOR § 98.2(a)(1)

Source Categories [1] Applicable in 2010 and Future Years
Electricity generation units that report CO_2 mass emissions year round through 40 CFR part 75 (subpart D).
Adipic acid production (subpart E).
Aluminum production (subpart F).
Ammonia manufacturing (subpart G).
Cement production (subpart H).
HCFC–22 production (subpart O).
HFC–23 destruction processes that are not collected with a HCFC–22 production facility and that destroy more than 2.14 metric tons of HFC–23 per year (subpart O).
Lime manufacturing (subpart S).
Nitric acid production (subpart V).
Petrochemical production (subpart X).
Petroleum refineries (subpart Y).
Phosphoric acid production (subpart Z).
Silicon carbide production (subpart BB).
Soda ash production (subpart CC).
Titanium dioxide production (subpart EE).
Municipal solid waste landfills that generate CH_4 in amounts equivalent to 25,000 metric tons CO_2e or more per year, as determined according to subpart HH of this part.
Manure management systems with combined CH_4 amd N_2O emissions in amounts equivalent to 25,000 metric tons CO_2e or more per year, as determined according to subpart JJ of this part.
Additional Source Categories [1] Applicable in 2011 and Future Years
(Reserved)

[1] Source categories are defined in each applicable subpart.

TABLE A–4 OF SUBPART A—SOURCE CATEGORY LIST FOR § 98.2(a)(2)

Source Categories [1] Applicable in 2010 and Future Years
Ferroalloy production (subpart K).
Glass production (subpart N).
Hydrogen production (subpart P).
Iron and steel production (subpart Q).

TABLE A–4 OF SUBPART A—SOURCE CATEGORY LIST FOR § 98.2(a)(2)—Continued

Lead production (subpart R).
Pulp and paper manufacturing (subpart AA).
Zinc production (subpart GG).
Additional Source Categories [1] Applicable in 2011 and Future Years
(Reserved)

[1] Source categories are defined in each applicable subpart.

TABLE A–5 OF SUBPART A—SUPPLIER CATEGORY LIST FOR § 98.2(a)(4)

Supplier Categories [1] Applicable in 2010 and Future Years
Coal-to-liquids suppliers (subpart LL):
(A) All producers of coal-to-liquid products.
(B) Importers of an annual quantity of coal-to-liquid products that is equivalent to 25,000 metric tons CO_2e or more.
(C) Exports of an annual quantity of coal-to-liquid products that is equivalent to 25,000 metric tons CO_2e or more.
Petroleum product suppliers (subpart MM):
(A) All petroleum refineries that distill crude oil.
(B) Importers of an annual quantity of petroleum products that is equivalent to 25,000 metric tons CO_2e or more.
(C) Exporters of an annual quantity of petroleum products that is equivalent to 25,000 metric tons CO_2e or more.
Natural gas and natural gas liquids suppliers (subpart NN):
(A) All fractionators.
(B) All local natural gas distribution companies.
Industrial greenhouse gas suppliers (subpart OO):
(A) All producers of industrial greenhouse gases.
(B) Importers of industrial greenhouse gases with annual bulk imports of N_2O, fluorinated GHG, and CO_2 that in combination are equivalent to 25,000 metric tons CO_2e or more.
(C) Exporters of industrial greenhouse gases with annual bulk exports of N_2O, fluorinated GHG, and CO_2 that in combination are equivalent to 25,000 metric tons CO_2e or more.
Carbon dioxide suppliers (subpart PP):
(A) All producers of CO_2.
(B) Importers of CO_2 with annual bulk imports of N_2O, fluorinated GHG, and CO_2 that in combination are equivalent to 25,000 metric tons CO_2e or more.
(C) Exporters of CO_2 with annual bulk exports of N_2O, fluorinated GHG, and CO_2 that in combination are equivalent to 25,000 metric tons CO_2e or more.
Additional Supplier Categories Applicable [1] in 2011 and Future Years
(Reserved)

[1] Suppliers are defined in each applicable subpart.

[FR Doc. C1–2010–5695 Filed 3–23–10; 8:45 am]
BILLING CODE 1505–01–D

ENVIRONMENTAL PROTECTION AGENCY

40 CFR Part 180

[EPA–HQ–OPP–2008–0652; FRL–8809–6]

Ammonium Salts of Fatty Acids (C_8-C_{18} Saturated); Exemption from the Requirement of a Tolerance

AGENCY: Environmental Protection Agency (EPA).

ACTION: Final rule.

SUMMARY: This regulation establishes an exemption from the requirement of a tolerance for residues of ammonium salts of fatty acids (C_8-C_{18} saturated) applied pre- and post-harvest on all raw agricultural commodities when applied/used as a surfactant. Falcon Lab, LLC. submitted a petition to EPA under the Federal Food, Drug, and Cosmetic Act (FFDCA), requesting an exemption from the requirement of a tolerance. This regulation eliminates the need to establish a maximum permissible level for residues of ammonium salts of fatty acids (C_8-C_{18} saturated).

DATES: This regulation is effective March 24, 2010. Objections and requests for hearings must be received on or before May 24, 2010, and must be filed in accordance with the instructions provided in 40 CFR part 178 (see also Unit I.C. of the **SUPPLEMENTARY INFORMATION**).

ADDRESSES: EPA has established a docket for this action under docket identification (ID) number EPA–HQ–OPP–2008–0652. All documents in the docket are listed in the docket index available at *http://www.regulations.gov*. Although listed in the index, some information is not publicly available, e.g., Confidential Business Information (CBI) or other information whose disclosure is restricted by statute. Certain other material, such as copyrighted material, is not placed on the Internet and will be publicly available only in hard copy form. Publicly available docket materials are available in the electronic docket at *http://www.regulations.gov*, or, if only available in hard copy, at the OPP Regulatory Public Docket in Rm. S–4400, One Potomac Yard (South Bldg.), 2777 S. Crystal Dr., Arlington, VA. The Docket Facility is open from 8:30 a.m. to 4 p.m., Monday through Friday, excluding legal holidays. The Docket Facility telephone number is (703) 305–5805.

FOR FURTHER INFORMATION CONTACT: Deirdre Sunderland, Registration Division (7505P), Office of Pesticide Programs, Environmental Protection Agency, 1200 Pennsylvania Ave., NW., Washington, DC 20460–0001; telephone number: (703) 603–0851; e-mail address: *sunderland.deirdre@epa.gov*.

SUPPLEMENTARY INFORMATION:

I. General Information

A. Does this Action Apply to Me?

You may be potentially affected by this action if you are an agricultural producer, food manufacturer, or pesticide manufacturer. Potentially affected entities may include, but are not limited to:

- Crop production (NAICS code 111).
- Animal production (NAICS code 112).
- Food manufacturing (NAICS code 311).
- Pesticide manufacturing (NAICS code 32532).

This listing is not intended to be exhaustive, but rather provides a guide for readers regarding entities likely to be affected by this action. Other types of entities not listed in this unit could also be affected. The North American Industrial Classification System (NAICS) codes have been provided to assist you and others in determining whether this action might apply to certain entities. If you have any questions regarding the applicability of this action to a particular entity, consult the person listed under **FOR FURTHER INFORMATION CONTACT**.

B. How Can I Access Electronic Copies of This Document?

You may access a frequently updated electronic version of 40 CFR part 180 through the Government Printing Office's e-CFR cite at *http://www.gpoaccess.gov/ecfr*.

C. Can I File an Objection or Hearing Request?

Under section 408(g) of FFDCA, 21 U.S.C. 346a, any person may file an objection to any aspect of this regulation and may also request a hearing on those objections. The EPA procedural regulations which govern the submission of objections and requests for hearings appear in 40 CFR part 178. You must file your objection or request a hearing on this regulation in accordance with the instructions provided in 40 CFR part 178. To ensure proper receipt by EPA, you must identify docket ID number EPA–HQ–OPP–2008–0652 in the subject line on the first page of your submission. All requests must be in writing, and must be mailed or delivered to the Hearing Clerk on or before May 24, 2010.

In addition to filing an objection or hearing request with the Hearing Clerk as described in 40 CFR part 178, please submit a copy of the filing that does not contain any CBI for inclusion in the public docket that is described in **ADDRESSES**. Information not marked confidential pursuant to 40 CFR part 2 may be disclosed publicly by EPA without prior notice. Submit your copies, identified by docket ID number EPA–HQ–OPP–2008–0652, by one of the following methods:

- *Federal eRulemaking Portal*: *http://www.regulations.gov*. Follow the on-line instructions for submitting comments.
- *Mail*: Office of Pesticide Programs (OPP) Regulatory Public Docket (7502P), Environmental Protection Agency, 1200 Pennsylvania Ave., NW., Washington, DC 20460–0001.
- *Delivery*: OPP Regulatory Public Docket (7502P), Environmental Protection Agency, Rm. S–4400, One Potomac Yard (South Bldg.), 2777 S. Crystal Dr., Arlington, VA. Deliveries are only accepted during the Docket Facility's normal hours of operation (8:30 a.m. to 4 p.m., Monday through Friday, excluding legal holidays). Special arrangements should be made for deliveries of boxed information. The Docket Facility telephone number is (703) 305–5805.

II. Background and Statutory Findings

In the **Federal Register** of September 5, 2008 (73 FR 51817) (FRL–8380–4), EPA issued a notice pursuant to section 408 of FFDCA, 21 U.S.C. 346a, as amended by the Food Quality Protection ACT (FQPA) (Public Law 104–170), announcing the filing of a pesticide petition (PP 8E7402) by Falcon Lab, LLC, 1103 Norbee Drive, Wilmington, DE 19803. The petition requested that 40 CFR 180.910 be amended by establishing an exemption from the requirement of a tolerance for residues of ammonium salts of fatty acids (C_8-C_{18} saturated) when used as an inert ingredient in pesticide formulations applied pre- and post-harvest. A request for a tolerance exemption under 40 CFR 180.950 was withdrawn by the company. That notice included a summary of the petition prepared by the petitioner. There were no comments received in response to the notice of filing.

Section 408(b)(2)(A)(i) of FFDCA allows EPA to establish an exemption from the requirement for a tolerance (the legal limit for a pesticide chemical residue in or on a food) only if EPA determines that the tolerance is "safe." Section 408(b)(2)(A)(ii) of FFDCA defines "safe" to mean that "there is a reasonable certainty that no harm will result from aggregate exposure to the pesticide chemical residue, including all anticipated dietary exposures and all other exposures for which there is reliable information." This includes exposure through drinking water and in residential settings, but does not include occupational exposure. Section 408(b)(2)(C) of FFDCA requires EPA to give special consideration to exposure of infants and children to the pesticide chemical residue in establishing a tolerance and to "ensure that there is a reasonable certainty that no harm will result to infants and children from aggregate exposure to the pesticide chemical residue. . . ."

EPA performs a number of analyses to determine the risks from aggregate exposure to pesticide residues. First, EPA determines the toxicity of pesticides. Second, EPA examines exposure to the pesticide through food, drinking water, and through other exposures that occur as a result of pesticide use in residential settings.

III. Inert Ingredient Definition

Inert ingredients are all ingredients that are not active ingredients as defined in 40 CFR 153.125 and include, but are not limited to, the following types of ingredients (except when they have a pesticidal efficacy of their own): Solvents such as alcohols and hydrocarbons; surfactants such as polyoxyethylene ploymers and fatty acids; carriers such as clay and diatomaceous earth; thickeners such as carrageenan and modified cellulose; wetting, spreading, and dispersing agents; propellants in aerosol dispensers; microencapsulating agents; and emulsifiers. The term "inert" is not intended to imply nontoxicity; the ingredient may or may not be chemically active. Generally, EPA has exempted inert ingredients from the requirement of a tolerance based on the low toxicity of the individual inert ingredients.

IV. Toxicological Profile

Consistent with section 408(b)(2)(D) of FFDCA, EPA has reviewed the available scientific data and other relevant information in support of this action and considered its validity, completeness and reliability and the relationship of this information to human risk. EPA has also considered available information concerning the variability of the sensitivities of major identifiable subgroups of consumers, including infants and children. The nature of the toxic effects caused by ammonium salts of fatty acids (C_8-C_{18} saturated) are discussed in this unit. The following provides a brief summary of the risk assessment and conclusions for the Agency's review of ammonium salts of fatty acids (C_8-C_{18} saturated). The Agency's full decision document for this action is available in the Agency's electronic docket (regulations.gov) under the docket ID number EPA–HQ–OPP–2008–0652.

Ammonium salts of fatty acids are mineral salts of naturally occurring fatty acids found in the environment. Fatty acids play a significant role in the normal diet of humans, animals, and plants and currently have Food and Drug Administration and EPA approved uses in food products. They are naturally present in commonly eaten fats and oils, accounting for approximately 30 to 40% of the caloric intake in the U.S. diet (~ 90 grams/day). They are also found in cosmetics and household cleaning products.

Ammonium salts of fatty acids have shown to be of low toxicity via the oral and dermal routes of exposure, Toxicity category IV and III, respectively (40 CFR 156.62). When applied for long periods of time, they have the potential to be dermal irritants. In addition, ammonium salts of fatty acids are eye irritants and have the potential to cause permanent eye injury. Limited data are available regarding the inhalation toxicity of soap salts; however, they are anticipated to be irritating via the inhalation route of exposure.

A subchronic range finding study did not see any significant systemic toxicity from nonanoic acid (C_9 saturated) given to rats at doses up to 1,834 milligrams/kilograms/day (mg/kg/day). Ammonium salts of fatty acids are not believed to be mutagenic or carcinogenic. When used at very high doses, potassium salts of fatty acids (a chemical belonging to the same chemical group) caused reproductive effects (post-implantation mortality at 6,000 mg/kg/day (6 times the limit dose of 1,000 mg/kg/day) on days 2 to 13 of pregnancy and musculo-skeletal abnormalities observed at 600 mg/kg/day); however, studies on ammonium salts of fatty acids did not show developmental or mutagenic effects in rats at doses up to 1,500 mg/kg/day. In addition, no signs of neurotoxicity or carcinogencity were observed. Although reproductive/developmental effects were seen at very high doses in a study on a structurally similar chemical, these effects were not observed in studies on the actual inert ingredient at doses up to 1,500 mg/kg/day. Based on the available evidence the Agency does not believe that ammonium salt of fatty acids (C_8-C_{18} saturated) when used as an inert ingredient in pesticide products will cause reproductive or developmental effects. Due to the low toxicity of ammonium soap salts and the natural occurrence of fatty acids in the environment and food products, a chronic study was not required.

V. Aggregate Exposures

In examining aggregate exposure, section 408 of FFDCA directs EPA to consider available information concerning exposures from the pesticide residue in food and all other non-occupational exposures, including drinking water from ground water or surface water and exposure through pesticide use in gardens, lawns, or buildings (residential and other indoor uses).

EPA establishes exemptions from the requirement of a tolerance only in those cases where it can be clearly demonstrated that the risks from aggregate exposure to pesticide chemical residues under reasonably foreseeable circumstances will pose no appreciable risks to human health. In order to determine the risks from aggregate exposure to pesticide inert ingredients, the Agency considers the toxicity of the inert in conjunction with possible exposure to residues of the inert ingredient through food, drinking water, and through other exposures that occur as a result of pesticide use in residential settings. If EPA is able to determine that a finite tolerance is not necessary to ensure that there is a reasonable certainty that no harm will result from aggregate exposure to the inert ingredient, an exemption from the requirement of a tolerance may be established.

Fatty acids are an essential component of the mammalian diet and the body is able to metabolize these soap salts and use them as an energy source. Due to the self-limiting nature of these chemicals (e.g. unpleasant taste and odor, herbicidal properties), their natural occurrence in the environment, their rapid environmental degradation and low toxicity, and their presence in commonly eaten foods (both naturally and intentionally added), a quantitative exposure assessment was not performed. The anticipated exposure from the use of ammonium salts of fatty acids as inert ingredients in pesticide products is expected to be minimal and is not anticipated to significantly increase the overall exposure to all populations including infants and children.

Because of their strong soil adsorption and the rapid degradation of ammonium salts of fatty acids they are not expected to reach surface water via runoff nor are they expected to leach into ground water. Based on the physical/chemical properties, volatilization from soils and water is not expected. There is no expected translocation into plants. Ammonium salts of fatty acid are not likely to persist in the environment and are expected to be indistinguishable from naturally occurring ammonium ions and fatty acids already present in the environment as a result of plant metabolism and formation by soil microbes.

VI. Cumulative Effects

Section 408(b)(2)(D)(v) of FFDCA requires that, when considering whether to establish, modify, or revoke a tolerance, the Agency consider "available information" concerning the cumulative effects of a particular pesticide's residues and "other substances that have a common mechanism of toxicity."

Unlike other pesticides for which EPA has followed a cumulative risk approach based on a common mechanism of toxicity, EPA has not made a common mechanism of toxicity finding as to ammonium salts of fatty acids (C_8-C_{18} saturated) and any other substances, and these chemicals do not appear to produce a toxic metabolite produced by other substances. For the purposes of this tolerance action, therefore, EPA has not assumed that these chemicals have a common mechanism of toxicity with other substances. For information regarding EPA's efforts to determine which chemicals have a common mechanism of toxicity and to evaluate the cumulative effects of such chemicals, see the policy statements released by EPA's Office of Pesticide Programs concerning common mechanism determinations and procedures for cumulating effects from substances found to have a common mechanism of toxicity on EPA's website at *http://ww.epa.gov/pesticides/cumulative/*.

VII. Additional Safety Factor for the Protection of Infants and Children.

Section 408 of the FFDCA provides that EPA shall apply an additional tenfold margin of exposure (safety) for infants and children in the case of threshold effects to account for prenatal and postnatal toxicity and the completeness of the data base unless EPA determines that a different margin of exposure (safety) will be safe for infants and children. There was no evidence of systemic toxicity or developmental toxicity in rats at doses up to 1,500 mg/kg/day in a developmental toxicity study (Master Record Identification Number 43843508) on pelargonic acid (nonanoate acid). The study showed no adverse effect of treatment on clinical signs, body weights, weight gain, or food/water consumption. No fetal toxicity attributed to the effects of treatment was observed between the

treated (1,500 mg/kg/day) or the untreated controls. Similarly, no systemic toxicity was observed at doses up to and including 1,837 mg/kg/day in a 14–day toxicity study in rats. No clinical signs of neurotoxicity were seen in any of the repeat dose studies. Since there was no hazard identified to adults and developing fetuses EPA did not use a safety factor analysis in assessing risks to ammonium salts of fatty acids (C_8-C_{18} saturated). For similar reasons, EPA determined that an additional safety factor to protect infants and children is not needed.

VIII. Determination of Safety for U.S. Population

As noted in Unit IV, ammonium salts of fatty acids are not expected to pose an acute risk. Because of the low oral and dermal toxicity, the rapid degradation of the chemical, and the natural presence of fatty acids in the environment, the Agency concluded that aggregate exposure will result in minimal risk to all subpopulations, including infants and children. Since the inhalation route is not a likely exposure pathway the anticipated risk from inhalation exposure is also considered minimal.

Taking into consideration all available information on ammonium salts of fatty acids (C_8-C_{18} saturated), it has been determined that there is a reasonable certainty that no harm to any population subgroup, including infants and children, will result from aggregate exposure to this chemical. Therefore, the exemption from the requirement of a tolerance for residues of ammonium salts of fatty acids (C_8-C_{18} saturated) (CAS Reg. No. 5972–76–9, 63718–65–0, 16530–70–4, 32582–95–9, 2437–23–2, 191799–95–8, 16530–71–5, 93917–76–1, 5297–93–8, 94266–36–1, 1002–89–7), when used as inert ingredient in pre- and post-harvest applications, under 40 CFR 180.910 can be considered safe under section 408(q) of the FFDCA.

IX. Other Considerations

A. Analytical Method

An analytical method is not required for enforcement purposes since the Agency is establishing an exemption from the requirement of a tolerance without any numerical limitation.

B. Existing Exemptions

Ammonium stearate (C_{18} saturated; CAS Reg. No. 1002–89–7), one of the soap salts, has been approved as an inert ingredient under 40 CFR 180.910. In addition, 40 CFR 180.1284 established an exemption from the requirement of a tolerance for residues of the active ingredient ammonium salts of higher fatty acids (C_8-C_{18} saturated; C_8-C_{12} unsaturated) in or on all food commodities when applied for the suppression and control of a wide variety of grasses and weeds.

C. International Tolerances

The Agency is not aware of any country requiring a tolerance for ammonium salts of fatty acids (C_8-C_{18} saturated) nor have any CODEX Maximum Residue Levels (MRLs) been established for any food crops at this time.

X. Conclusions

Therefore, a tolerance exemption is established for Ammonium salts of fatty acids (C_8-C_{18} saturated) (CAS Reg. No. 5972–76–9, 63718–65–0, 16530–70–4, 32582–95–9, 2437–23–2, 191799–95–8, 16530–71–5, 93917–76–1, 5297–93–8, 94266–36–1, 1002–89–7) when used as inert ingredient in pesticide formulations applied to pre- and post-harvest crops only.

XI. Statutory and Executive Order Reviews

This final rule establishes a tolerance under section 408(d) of FFDCA in response to a petition submitted to the Agency. The Office of Management and Budget (OMB) has exempted these types of actions from review under Executive Order 12866, entitled *Regulatory Planning and Review* (58 FR 51735, October 4, 1993). Because this final rule has been exempted from review under Executive Order 12866, this final rule is not subject to Executive Order 13211, entitled *Actions Concerning Regulations That Significantly Affect Energy Supply, Distribution, or Use* (66 FR 28355, May 22, 2001) or Executive Order 13045, entitled *Protection of Children from Environmental Health Risks and Safety Risks* (62 FR 19885, April 23, 1997). This final rule does not contain any information collections subject to OMB approval under the Paperwork Reduction Act (PRA), 44 U.S.C. 3501 *et seq.*, nor does it require any special considerations under Executive Order 12898, entitled *Federal Actions to Address Environmental Justice in Minority Populations and Low-Income Populations* (59 FR 7629, February 16, 1994).

Since tolerances and exemptions that are established on the basis of a petition under section 408(d) of FFDCA, such as the exemption in this final rule, do not require the issuance of a proposed rule, the requirements of the Regulatory Flexibility Act (RFA) (5 U.S.C. 601 *et seq.*) do not apply.

This final rule directly regulates growers, food processors, food handlers, and food retailers, not States or tribes, nor does this action alter the relationships or distribution of power and responsibilities established by Congress in the preemption provisions of section 408(n)(4) of FFDCA. As such, the Agency has determined that this action will not have a substantial direct effect on States or tribal governments, on the relationship between the national government and the States or tribal governments, or on the distribution of power and responsibilities among the various levels of government or between the Federal Government and Indian tribes. Thus, the Agency has determined that Executive Order 13132, entitled *Federalism* (64 FR 43255, August 10, 1999) and Executive Order 13175, entitled *Consultation and Coordination with Indian Tribal Governments* (65 FR 67249, November 9, 2000) do not apply to this final rule. In addition, this final rule does not impose any enforceable duty or contain any unfunded mandate as described under Title II of the Unfunded Mandates Reform Act of 1995 (UMRA) (Public Law 104–4).

This action does not involve any technical standards that would require Agency consideration of voluntary consensus standards pursuant to section 12(d) of the National Technology Transfer and Advancement Act of 1995 (NTTAA), Public Law 104–113, section 12(d) (15 U.S.C. 272 note).

XII. Congressional Review Act

The Congressional Review Act, 5 U.S.C. 801 *et seq.*, generally provides that before a rule may take effect, the agency promulgating the rule must submit a rule report to each House of the Congress and to the Comptroller General of the United States. EPA will submit a report containing this rule and other required information to the U.S. Senate, the U.S. House of Representatives, and the Comptroller General of the United States prior to publication of this final rule in the **Federal Register**. This final rule is not a "major rule" as defined by 5 U.S.C. 804(2).

List of Subjects in 40 CFR Part 180

Environmental protection, Administrative practice and procedure, Agricultural commodities, Pesticides and pests, Reporting and recordkeeping requirements.

Dated: March 11, 2010.

Lois Rossi,

Director, Registration Division, Office of Pesticide Programs.

■ Therefore, 40 CFR chapter I is amended as follows:

PART 180—[AMENDED]

■ 1. The authority citation for part 180 continues to read as follows:

Authority: 21 U.S.C. 321(q), 346a and 371.

■ 2. In §180.910, in the table add alphabetically the following inert ingredient to read as follows:

§ 180.910 Inert ingredients used pre- and post-harvest; exemptions from the requirement of a tolerance.

* * * * *

Inert ingredients	Limits	Uses
* * *	* *	* *
Ammonium salts of fatty acids (C_8-C_{18} saturated) (CAS Reg. No. 5972–76–9, 63718–65–0, 16530–70–4, 32582–95–9, 2437–23–2, 191799–95–8, 16530–71–5, 93917–76–1, 5297–93–8, 94266–36–1, 1002–89–7)		Surfactant
* * *	* *	* *

[FR Doc. 2010–6495 Filed 3–23–10; 8:45 am]

BILLING CODE 6560–50–S

ENVIRONMENTAL PROTECTION AGENCY

40 CFR Part 180

[EPA–HQ–OPP–2009–0092; FRL–8814–2]

Clopyralid; Pesticide Tolerances

AGENCY: Environmental Protection Agency (EPA).

ACTION: Final rule.

SUMMARY: This regulation establishes tolerances for residues of clopyralid in or on Swiss chard and bushberry subgroup 13-07B. This regulation additionally amends an existing tolerance in or on strawberry. Interregional Research Project Number 4 (IR-4) requested these tolerances under the Federal Food, Drug, and Cosmetic Act (FFDCA).

DATES: This regulation is effective March 24, 2010. Objections and requests for hearings must be received on or before May 24, 2010, and must be filed in accordance with the instructions provided in 40 CFR part 178 (see also Unit I.C. of the **SUPPLEMENTARY INFORMATION**).

ADDRESSES: EPA has established a docket for this action under docket identification (ID) number EPA–HQ–OPP–2009–0092. All documents in the docket are listed in the docket index available at *http://www.regulations.gov*. Although listed in the index, some information is not publicly available, e.g., Confidential Business Information (CBI) or other information whose disclosure is restricted by statute. Certain other material, such as copyrighted material, is not placed on the Internet and will be publicly available only in hard copy form. Publicly available docket materials are available in the electronic docket at *http://www.regulations.gov*, or, if only available in hard copy, at the OPP Regulatory Public Docket in Rm. S–4400, One Potomac Yard (South Bldg.), 2777 S. Crystal Dr., Arlington, VA. The Docket Facility is open from 8:30 a.m. to 4 p.m., Monday through Friday, excluding legal holidays. The Docket Facility telephone number is (703) 305–5805.

FOR FURTHER INFORMATION CONTACT: Laura Nollen, Registration Division (7505P), Office of Pesticide Programs, Environmental Protection Agency, 1200 Pennsylvania Ave., NW., Washington, DC 20460–0001; telephone number: (703) 305–7390; e-mail address: *nollen.laura@epa.gov*.

SUPPLEMENTARY INFORMATION:

I. General Information

A. Does this Action Apply to Me?

You may be potentially affected by this action if you are an agricultural producer, food manufacturer, or pesticide manufacturer. Potentially affected entities may include, but are not limited to those engaged in the following activities:

- Crop production (NAICS code 111).
- Animal production (NAICS code 112).
- Food manufacturing (NAICS code 311).
- Pesticide manufacturing (NAICS code 32532).

This listing is not intended to be exhaustive, but rather to provide a guide for readers regarding entities likely to be affected by this action. Other types of entities not listed in this unit could also be affected. The North American Industrial Classification System (NAICS) codes have been provided to assist you and others in determining whether this action might apply to certain entities. If you have any questions regarding the applicability of this action to a particular entity, consult the person listed under **FOR FURTHER INFORMATION CONTACT**.

B. How Can I Get Electronic Access to Other Related Information?

You may access a frequently updated electronic version of EPA's tolerance regulations at 40 CFR part 180 through the Government Printing Office's e-CFR cite at *http://www.gpoaccess.gov/ecfr*. To access the OPPTS harmonized test guidelines referenced in this document electronically, please go to *http://www.epa.gpo/oppts* and select "Test Methods and Guidelines."

C. Can I File an Objection or Hearing Request?

Under section 408(g) of FFDCA, 21 U.S.C. 346a, any person may file an objection to any aspect of this regulation and may also request a hearing on those objections. You must file your objection or request a hearing on this regulation in accordance with the instructions provided in 40 CFR part 178. To ensure proper receipt by EPA, you must identify docket ID number EPA–HQ–OPP–2009–0092 in the subject line on the first page of your submission. All requests must be in writing, and must be mailed or delivered to the Hearing Clerk as required by 40 CFR part 178 on or before May 24, 2010.

In addition to filing an objection or hearing request with the Hearing Clerk as described in 40 CFR part 178, please submit a copy of the filing that does not contain any CBI for inclusion in the public docket that is described in **ADDRESSES**. Information not marked confidential pursuant to 40 CFR part 2 may be disclosed publicly by EPA without prior notice. Submit this copy, identified by docket ID number EPA–HQ–OPP–2009–0092, by one of the following methods:

- *Federal eRulemaking Portal*: *http://www.regulations.gov*. Follow the on-line instructions for submitting comments.
- *Mail*: Office of Pesticide Programs (OPP) Regulatory Public Docket (7502P), Environmental Protection Agency, 1200 Pennsylvania Ave., NW., Washington, DC 20460–0001.
- *Delivery*: OPP Regulatory Public Docket (7502P), Environmental Protection Agency, Rm. S–4400, One Potomac Yard (South Bldg.), 2777 S. Crystal Dr., Arlington, VA. Deliveries are only accepted during the Docket Facility's normal hours of operation (8:30 a.m. to 4 p.m., Monday through Friday, excluding legal holidays).

Special arrangements should be made for deliveries of boxed information. The Docket Facility telephone number is (703) 305–5805.

II. Petition for Tolerance

In the **Federal Register** of April 8, 2009 (74 FR 15971) (FRL–8407–4), EPA issued a notice pursuant to section 408(d)(3) of FFDCA, 21 U.S.C. 346a(d)(3), announcing the filing of a pesticide petition (PP 8E7481) by IR-4, 500 College Road East, Suite 201W, Princeton, NJ 08540. The petition requested that 40 CFR 180.431 be amended by establishing tolerances for combined residues of the herbicide clopyralid, (3,6-dichloro-2-pyridinecarboxylic acid), in or on Swiss chard at 5.0 parts per million (ppm) and bushberry subgroup 13-07B at 6.0 ppm. This petition additionally requested that EPA establish a tolerance with regional restrictions in or on strawberry, annual at 4.0 ppm. That notice referenced a summary of the petition prepared on behalf of IR-4 by Dow AgroSciences, the registrant, which is available to the public in the docket, *http://www.regulations.gov*. There were no comments received in response to the notice of filing.

Based upon review of the data supporting the petition, EPA has revised the proposed tolerance levels on Swiss chard and bushberry subgroup 13-07B. The reason for these changes is explained in Unit IV.C.

III. Aggregate Risk Assessment and Determination of Safety

Section 408(b)(2)(A)(i) of FFDCA allows EPA to establish a tolerance (the legal limit for a pesticide chemical residue in or on a food) only if EPA determines that the tolerance is "safe." Section 408(b)(2)(A)(ii) of FFDCA defines "safe" to mean that "there is a reasonable certainty that no harm will result from aggregate exposure to the pesticide chemical residue, including all anticipated dietary exposures and all other exposures for which there is reliable information." This includes exposure through drinking water and in residential settings, but does not include occupational exposure. Section 408(b)(2)(C) of FFDCA requires EPA to give special consideration to exposure of infants and children to the pesticide chemical residue in establishing a tolerance and to "ensure that there is a reasonable certainty that no harm will result to infants and children from aggregate exposure to the pesticide chemical residue...."

Consistent with section 408(b)(2)(D) of FFDCA, and the factors specified in section 408(b)(2)(D) of FFDCA, EPA has reviewed the available scientific data and other relevant information in support of this action. EPA has sufficient data to assess the hazards of and to make a determination on aggregate exposure for the petitioned-for tolerances for residues of clopyralid on Swiss chard at 3.0 ppm; bushberry subgroup 13-07B at 0.50 ppm; and strawberry at 4.0 ppm. EPA's assessment of exposures and risks associated with establishing tolerances follows.

A. Toxicological Profile

EPA has evaluated the available toxicity data and considered its validity, completeness, and reliability as well as the relationship of the results of the studies to human risk. EPA has also considered available information concerning the variability of the sensitivities of major identifiable subgroups of consumers, including infants and children.

Clopyralid has low acute toxicity via the oral, dermal, and inhalation routes of exposure. It is not a dermal irritant or sensitizer, but it is a severe eye irritant in its acid form. No consistent mammalian target organ was identified in the clopyralid toxicological studies submitted to the Agency. Effects were noted in various organs and systems in different species, including increases in liver weight, changes in clinical chemistry and blood cell parameters, skin lesions, and decreases in body weight gain.

In subchronic mouse studies, decreased body weights were observed in males and females. Following chronic exposure, effects in dogs included reductions in red blood cell parameters, increased liver weight (males), and vacuolated adrenal cortical cells (females). Additionally, skin lesions and clinical chemistry changes (decreased serum glucose, protein, and albumin) were observed at the highest dose tested (HDT). In the rat, epithelial hyperplasia, thickening of the limiting ridge of the stomach, and decreased body weight were observed following chronic exposure. There were no clinical indications of neurotoxicity or immunotoxicity in the subchronic or chronic toxicity studies.

No developmental toxicity was observed in the rat at doses that caused maternal mortality and decreased body weight gains. In the rabbit developmental toxicity study, decreased fetal body weights and hydrocephalus were observed at a dose that caused severe maternal toxicity including mortality, clinical signs of toxicity, decreased body weight gains, and gastric mucosal lesions. Reproductive toxicity was not observed in the rat, but mean pup weight reductions and relative liver weight increases were observed at doses that caused parental toxicity (decreased body weight/weight gain and food consumption and gastric lesions).

There was no evidence of carcinogenic potential in the rat and mouse 2–year carcinogenicity studies. Further, there were no positive findings for mutagenicity or clastogenicity observed in a battery of mutagenicity studies (including bacterial reverse gene mutation, *in vitro* and *in vivo* host-mediated assays in *Salmonella* and *Saccharomyces*, *in vivo* chromosomal aberrations, unscheduled DNA synthesis, and dominant lethal activity studies). Based on the results of these studies, EPA has determined that clopyralid is "not likely to be carcinogenic to humans."

Specific information on the studies received and the nature of the adverse effects caused by clopyralid as well as the no-observed-adverse-effect-level (NOAEL) and the lowest-observed-adverse-effect-level (LOAEL) from the toxicity studies can be found at *http://www.regulations.gov* in the document: "Human Health Risk Assessment to Evaluate New Uses on Swiss Chard, Bushberry Subgroup (13-07B), and Strawberry (Regional Restriction)," at pages 26–30 in docket ID number EPA–HQ–OPP–2009–0092.

B. Toxicological Endpoints

For hazards that have a threshold below which there is no appreciable risk, a toxicological point of departure (POD) is identified as the basis for derivation of reference values for risk assessment. The POD may be defined as the highest dose at which no adverse effects are observed (the NOAEL) in the toxicology study identified as appropriate for use in risk assessment. However, if a NOAEL cannot be determined, the lowest dose at which adverse effects of concern are identified (the LOAEL) or a benchmark dose (BMD) approach is sometimes used for risk assessment. Uncertainty/safety factors (UFs) are used in conjunction with the POD to take into account uncertainties inherent in the extrapolation from laboratory animal data to humans and in the variations in sensitivity among members of the human population as well as other unknowns. Safety is assessed for acute and chronic dietary risks by comparing aggregate food and water exposure to the pesticide to the acute population adjusted dose (aPAD) and chronic population adjusted dose (cPAD). The aPAD and cPAD are calculated by

dividing the POD by all applicable UFs. Aggregate short-term, intermediate-term, and chronic-term risks are evaluated by comparing food, water, and residential exposure to the POD to ensure that the margin of exposure (MOE) called for by the product of all applicable UFs is not exceeded. This latter value is referred to as the level of concern (LOC).

For non-threshold risks, the Agency assumes that any amount of exposure will lead to some degree of risk. Thus, the Agency estimates risk in terms of the probability of an occurrence of the adverse effect greater than that expected in a lifetime. For more information on the general principles EPA uses in risk characterization and a complete description of the risk assessment process, see *http://www.epa.gov/pesticides/factsheets/riskassess.htm*.

A summary of the toxicological endpoints for clopyralid used for human risk assessment can be found at *http://www.regulations.gov* in the document: "Human Health Risk Assessment to Evaluate New Uses on Swiss Chard, Bushberry Subgroup (13-07B), and Strawberry (Regional Restriction)," at pages 16–18 in docket ID number EPA–HQ–OPP–2009–0092.

C. Exposure Assessment

1. *Dietary exposure from food and feed uses*. In evaluating dietary exposure to clopyralid, EPA considered exposure under the petitioned-for tolerances as well as all existing clopyralid tolerances in 40 CFR 180.431. EPA assessed dietary exposures from clopyralid in food as follows:

i. *Acute exposure*. Quantitative acute dietary exposure and risk assessments are performed for a food-use pesticide, if a toxicological study has indicated the possibility of an effect of concern occurring as a result of a 1–day or single exposure.

In estimating acute dietary exposure, EPA used food consumption information from the United States Department of Agriculture (USDA) 1994–1996 and 1998 Nationwide Continuing Surveys of Food Intake by Individuals (CSFII). As to residue levels in food, EPA used tolerance-level residues, Dietary Exposure Evaluation Model (DEEM) default processing factors, and 100 percent crop treated (PCT) for all proposed commodities.

ii. *Chronic exposure*. In conducting the chronic dietary exposure assessment EPA used the food consumption data from the USDA 1994–1996 and 1998 CSFII. As to residue levels in food, EPA used tolerance-level residues, DEEM default processing factors, and 100 PCT for all proposed commodities.

iii. *Cancer*. Based on the evidence discussed in Unit III.A., EPA has determined that clopyralid is "not likely to be carcinogenic to humans." Therefore, a quantitative exposure assessment to evaluate cancer risk is unnecessary.

iv. *Anticipated residue and PCT information*. EPA did not use anticipated residue and/or PCT information in the dietary assessment for clopyralid. Tolerance level residues and 100 PCT were assumed for all food commodities.

2. *Dietary exposure from drinking water*. The Agency used screening level water exposure models in the dietary exposure analysis and risk assessment for clopyralid in drinking water. These simulation models take into account data on the physical, chemical, and fate/transport characteristics of clopyralid. Further information regarding EPA drinking water models used in pesticide exposure assessment can be found at *http://www.epa.gov/oppefed1/models/water/index.htm*.

Based on the First Index Reservoir Screening Tool (FIRST), and Screening Concentration in Ground Water (SCI-GROW) models, the estimated drinking water concentrations (EDWCs) of clopyralid for surface water are estimated to be 45.0 parts per billion (ppb) for acute exposures and 11.9 ppb for chronic exposures. For ground water, the EDWC is estimated to be 0.39 ppb for both acute exposures and chronic exposures for non-cancer assessments.

The Agency also considered available surface and ground water monitoring data from the United States Geological Survey (USGS) National Water Quality Assessment Data Warehouse (*http://water.usgs.gov/nawqa/*) for clopyralid. Groundwater concentrations as high as 13 ppb have been detected in Alabama and surface water concentrations of up to 42 ppb have been detected in North Carolina, Illinois, and Ohio. Clopyralid is a persistent chemical that partitions to water. Degradation is driven by aerobic aquatic metabolism, though this pathway is not directly characterized through a guideline study. The degradation behavior for clopyralid best fits second-order kinetics, though first-order kinetics are used to derive and parameterize FIRST and SCIGROW models. In this case, second-order kinetics provide a substantially larger half-life estimate than first-order kinetics. These modeling limitations likely account for the higher concentrations in groundwater from the monitoring data versus the groundwater EDWCs. Peak surface water concentrations from monitoring data are slightly below the EDWC (45.0 ppb) used to estimate the contribution to drinking water for the acute dietary risk assessment. Therefore, EPA believes 45.0 ppb is a reasonable, high end estimate to be used in risk assessment.

Modeled estimates of drinking water concentrations were directly entered into the dietary exposure model. For acute dietary risk assessment, the water concentration value of 45.0 ppb was used to assess the contribution to drinking water. The EDWC of 11.9 ppb was used to assess the contribution to drinking water for chronic dietary risk assessment.

3. *From non-dietary exposure*. The term "residential exposure" is used in this document to refer to non-occupational, non-dietary exposure (e.g., for lawn and garden pest control, indoor pest control, termiticides, and flea and tick control on pets).

Clopyralid is currently registered for use on residential turf, which could result in residential exposures. EPA assessed residential exposure using the following assumptions: Short-term inhalation exposure for adults applying clopyralid to residential turf by push-type spreaders, low-pressure hand sprayers, and garden hose end sprayers; short-term postapplication exposure for toddlers from incidental oral contact with treated turf (hand-to-mouth exposure); short-term postapplication incidental oral ingestion of granules from treated turf; and intermediate-term postapplication exposure for toddlers from incidental oral contact with treated turf (hand-to-mouth exposure). Although dermal exposure is anticipated from residential use of clopyralid, risks via the dermal route of exposure are not of concern for clopyralid; therefore, dermal risks were not quantitatively assessed for residential exposure.

4. *Cumulative effects from substances with a common mechanism of toxicity*. Section 408(b)(2)(D)(v) of FFDCA requires that, when considering whether to establish, modify, or revoke a tolerance, the Agency consider "available information" concerning the cumulative effects of a particular pesticide's residues and "other substances that have a common mechanism of toxicity."

EPA has not found clopyralid to share a common mechanism of toxicity with any other substances, and clopyralid does not appear to produce a toxic metabolite produced by other substances. For the purposes of this tolerance action, therefore, EPA has assumed that clopyralid does not have a common mechanism of toxicity with other substances. For information

regarding EPA's efforts to determine which chemicals have a common mechanism of toxicity and to evaluate the cumulative effects of such chemicals, see EPA's website at *http://www.epa.gov/pesticides/cumulative*.

D. Safety Factor for Infants and Children

1. *In general*. Section 408(b)(2)(C) of FFDCA provides that EPA shall apply an additional tenfold (10X) margin of safety for infants and children in the case of threshold effects to account for prenatal and postnatal toxicity and the completeness of the database on toxicity and exposure unless EPA determines based on reliable data that a different margin of safety will be safe for infants and children. This additional margin of safety is commonly referred to as the Food Quality Protection Act safety factor (FQPA SF). In applying this provision, EPA either retains the default value of 10X, or uses a different additional safety factor when reliable data available to EPA support the choice of a different factor.

2. *Prenatal and postnatal sensitivity*. There was no evidence of increased prenatal and/or postnatal qualitative or quantitative susceptibility in the available studies in the toxicology database, including the rat and rabbit developmental toxicity studies and a 2–generation reproduction toxicity study in rats. In the developmental rat study, no developmental effects were seen at doses that caused maternal toxicity. In the rabbit developmental study, hydrocephalus and decreased mean fetal weight were observed at a dose that caused severe maternal toxicity, including mortality. In the 2–generation reproduction study, decreased pup weights and increased relative liver weights were observed at the same level that resulted in parental toxicity (decreased body weights, body weight gains and food consumption and slight focal hyperkeratotic changes in the gastric squamous mucosa).

3. *Conclusion*. EPA has determined that reliable data show the safety of infants and children would be adequately protected if the FQPA SF were reduced to 1X. That decision is based on the following findings:

i. The toxicity database for clopyralid is complete except for immunotoxicity, acute neurotoxicity, and subchronic neurotoxicity testing. Recent changes to 40 CFR part 158 require acute and subchronic neurotoxicity testing (OPPTS Guideline 870.6200), and immunotoxicity testing (OPPTS Guideline 870.7800) for pesticide registration; however, the existing data are sufficient for endpoint selection for exposure/risk assessment scenarios, and for evaluation of the requirements under the FQPA. There are no clinical or micropathological indications of neurotoxicity or immunotoxicity in the available subchronic and chronic studies in multiple species. Although hydrocephalus was observed in the rabbit developmental toxicity study, it was only observed at a dose that also caused severe maternal toxicity, including mortality. The endpoints selected for risk assessment are considered adequately protective of prenatal and/or postnatal toxicity; therefore, an additional database uncertainty factor is not needed to account for potential immunotoxicity or neurotoxicity.

ii. In the rabbit developmental toxicity study, neuropathology (hydrocephalus) was observed at the HDT. However, the concern for this effect is considered low because it occurred at a dose that caused severe maternal toxicity, including mortality and decreased body weight gain and food consumption. Further, there was no evidence of neurotoxicity in the rat developmental or reproduction studies or in the available subchronic or chronic studies; therefore, there is no need for a developmental neurotoxicity study or additional UFs to account for neurotoxicity.

iii. There is no evidence that clopyralid results in increased susceptibility from *in utero* exposure to rats or rabbits in the prenatal developmental studies or exposure to young rats in the 2–generation reproduction study.

iv. There are no residual uncertainties identified in the exposure databases. The dietary food exposure assessments were performed based on 100 PCT and tolerance-level residue data. Based on both modeling and monitoring data, EPA made reasonable (protective) assumptions in the ground and surface water modeling used to assess exposure to clopyralid in drinking water. EPA used similarly conservative assumptions to assess postapplication exposure of children as well as incidental oral exposure of toddlers. These assessments will not underestimate the exposure and risks posed by clopyralid.

E. Aggregate Risks and Determination of Safety

EPA determines whether acute and chronic pesticide exposures are safe by comparing aggregate exposure estimates to the aPAD and cPAD. The aPAD and cPAD represent the highest safe exposures, taking into account all appropriate SFs. EPA calculates the aPAD and cPAD by dividing the POD by all applicable UFs. For linear cancer risks, EPA calculates the probability of additional cancer cases given the estimated aggregate exposure. Short-term, intermediate-term, and chronic-term risks are evaluated by comparing the estimated aggregate food, water, and residential exposure to the POD to ensure that the MOE called for by the product of all applicable UFs is not exceeded.

1. *Acute risk*. An acute aggregate risk assessment takes into account exposure estimates from acute dietary consumption of food and drinking water. Using the exposure assumptions discussed in this unit for acute exposure, the acute dietary exposure from food and water to clopyralid will occupy 9% of the aPAD for children 1 to 2 years old, the population group receiving the greatest exposure.

2. *Chronic risk*. Using the exposure assumptions described in this unit for chronic exposure, EPA has concluded that chronic exposure to clopyralid from food and water will utilize 23% of the cPAD for children 1 to 2 years old, the population group receiving the greatest exposure. Based on the explanation in Unit III.C.3., regarding residential use patterns, chronic residential exposure to residues of clopyralid is not expected.

3. *Short-term risk*. Short-term aggregate exposure takes into account short-term residential exposure plus chronic exposure to food and water (considered to be a background exposure level).

Clopyralid is currently registered for uses that could result in short-term residential exposure and the Agency has determined that it is appropriate to aggregate chronic exposure through food and water with short-term residential exposures to clopyralid. While there is potential for toddlers to ingest granular formulations of clopyralid directly from treated turf, due to the episodic nature of granule ingestion, this source of exposure was not included in the short-term aggregate assessment. Therefore, using the exposure assumptions described in this unit for short-term exposures, EPA has concluded the combined short-term food, water, and residential exposures result in aggregate MOEs of 5,500 for adult handlers from inhalation exposure and 1,700 for children 1 to 2 years old from incidental oral (hand-to-mouth) exposure. The LOC is for MOEs lower than 100. Therefore, the aggregate MOEs for short-term exposure are not of concern to EPA.

4. *Intermediate-term risk*. Intermediate-term aggregate exposure takes into account intermediate-term residential exposure plus chronic

exposure to food and water (considered to be a background exposure level).

Clopyralid is currently registered for uses that could result in intermediate-term residential exposure and the Agency has determined that it is appropriate to aggregate chronic exposure to clopyralid through food and water with intermediate-term exposures for clopyralid. Using the exposure assumptions described in this unit for intermediate-term exposures, EPA has concluded the combined intermediate-term food, water, and residential exposures result in an aggregate MOE of 390 for children 1 to 2 years old from incidental oral (hand-to-mouth) exposure. The LOC is for MOEs lower than 100. Therefore, the aggregate MOE for intermediate-term exposure is not of concern to EPA.

5. *Aggregate cancer risk for U.S. population*. Based on the adequate cancer studies in rats and mice, EPA has concluded that clopyralid is not expected to pose a cancer risk to humans.

6. *Determination of safety*. Based on these risk assessments, EPA concludes that there is a reasonable certainty that no harm will result to the general population, or to infants and children from aggregate exposure to clopyralid residues.

IV. Other Considerations

A. Analytical Enforcement Methodology

The following adequate enforcement methodology is available in *The Pesticide Analytical Manual Vol. II* to enforce the tolerance expression for plant commodities: A gas chromatography/electron-capture detection (GC/ECD) method.

B. International Residue Limits

There are no Codex or Mexican maximum residue limits (MRLs) for residues of clopyralid in or on the requested commodities. There are Canadian MRLs for residues of clopyralid at 1.0 ppm on strawberry and 0.1 ppm on blueberry. While the Canadian MRL for strawberry harmonizes with the existing U.S. tolerance for strawberry at 1.0 ppm, the revised U.S. tolerance on strawberry at 4.0 ppm cannot be harmonized with the Canadian MRL because the residue field trial data supporting the revised tolerance resulted in residues that were higher than 1.0 ppm. Additionally, the U.S. tolerance on bushberry subgroup 13-07B (at 0.50 ppm) cannot be harmonized with the Canadian MRL on blueberry (at 0.1 ppm) because residue field trial data supporting the U.S. tolerance resulted in residues that were higher than 0.1 ppm.

C. Revisions to Petitioned-For Tolerances

Based on analysis of the residue field trial data supporting the petition, EPA revised the proposed tolerances on Swiss chard from 5.0 ppm to 3.0 ppm and bushberry subgroup 13-07B from 6.0 ppm to 0.50 ppm. The Agency revised the tolerance levels based on analysis of the residue field trial data using the Agency's Tolerance Spreadsheet in accordance with the Agency's *Guidance for Setting Pesticide Tolerances Based on Field Trial Data*. Additionally, EPA revised the introductory text in paragraph (a) to clarify in the tolerance expression (1) that, as provided in FFDCA section 408(a)(3), the tolerance covers metabolites and degradates of clopyralid not specifically mentioned; and (2) that compliance with the specified tolerance levels is to be determined by measuring only the specific compounds mentioned in the tolerance expression.

V. Conclusion

Therefore, tolerances are established for residues of clopyralid, (3,6-dichloro-2-pyridinecarboxylic acid), in or on Swiss chard at 3.0 ppm; bushberry subgroup 13-07B at 0.50; and strawberry at 4.0 ppm.

VI. Statutory and Executive Order Reviews

This final rule establishes tolerances under section 408(d) of FFDCA in response to a petition submitted to the Agency. The Office of Management and Budget (OMB) has exempted these types of actions from review under Executive Order 12866, entitled *Regulatory Planning and Review* (58 FR 51735, October 4, 1993). Because this final rule has been exempted from review under Executive Order 12866, this final rule is not subject to Executive Order 13211, entitled *Actions Concerning Regulations That Significantly Affect Energy Supply, Distribution, or Use* (66 FR 28355, May 22, 2001) or Executive Order 13045, entitled *Protection of Children from Environmental Health Risks and Safety Risks* (62 FR 19885, April 23, 1997). This final rule does not contain any information collections subject to OMB approval under the Paperwork Reduction Act (PRA), 44 U.S.C. 3501 *et seq.*, nor does it require any special considerations under Executive Order 12898, entitled *Federal Actions to Address Environmental Justice in Minority Populations and Low-Income Populations* (59 FR 7629, February 16, 1994).

Since tolerances and exemptions that are established on the basis of a petition under section 408(d) of FFDCA, such as the tolerance in this final rule, do not require the issuance of a proposed rule, the requirements of the Regulatory Flexibility Act (RFA) (5 U.S.C. 601 *et seq.*) do not apply.

This final rule directly regulates growers, food processors, food handlers, and food retailers, not States or tribes, nor does this action alter the relationships or distribution of power and responsibilities established by Congress in the preemption provisions of section 408(n)(4) of FFDCA. As such, the Agency has determined that this action will not have a substantial direct effect on States or tribal governments, on the relationship between the national government and the States or tribal governments, or on the distribution of power and responsibilities among the various levels of government or between the Federal Government and Indian tribes. Thus, the Agency has determined that Executive Order 13132, entitled *Federalism* (64 FR 43255, August 10, 1999) and Executive Order 13175, entitled *Consultation and Coordination with Indian Tribal Governments* (65 FR 67249, November 9, 2000) do not apply to this final rule. In addition, this final rule does not impose any enforceable duty or contain any unfunded mandate as described under Title II of the Unfunded Mandates Reform Act of 1995 (UMRA) (Pub. L. 104–4).

This action does not involve any technical standards that would require Agency consideration of voluntary consensus standards pursuant to section 12(d) of the National Technology Transfer and Advancement Act of 1995 (NTTAA), Public Law 104–113, section 12(d) (15 U.S.C. 272 note).

VII. Congressional Review Act

The Congressional Review Act, 5 U.S.C. 801 *et seq.*, generally provides that before a rule may take effect, the agency promulgating the rule must submit a rule report to each House of the Congress and to the Comptroller General of the United States. EPA will submit a report containing this rule and other required information to the U.S. Senate, the U.S. House of Representatives, and the Comptroller General of the United States prior to publication of this final rule in the **Federal Register**. This final rule is not a "major rule" as defined by 5 U.S.C. 804(2).

List of Subjects in 40 CFR Part 180

Environmental protection, Administrative practice and procedure,

Agricultural commodities, Pesticides and pests, Reporting and recordkeeping requirements.

Dated: March 12, 2010.

Lois Rossi,

Director, Registration Division, Office of Pesticide Programs.

■ Therefore, 40 CFR chapter I is amended as follows:

PART 180—[AMENDED]

■ 1. The authority citation for part 180 continues to read as follows:

Authority: 21 U.S.C. 321(q), 346a and 371.

■ 2. In § 180.431, paragraph (a) is amended as follows:

i. Revise the introductory text.

ii. In the table, revise the entry for "Strawberry", and add alphabetically "Bushberry subgroup 13-07B" and "Swiss chard" to read as follows:

§ 180.431 Clopyralid; tolerances for residues.

(a) *General.*. Tolerances are established for residues of the herbicide clopyralid, including its metabolites and degradates, in or on the commodities in the table below from its application in the acid form or in the form of its salts. Compliance with the tolerance levels specified below is to be determined by measuring only clopyralid, (3,6-dichloro-2-pyridinecarboxylic acid), in or on the following commodities:

Commodity	Parts per million
* * *	* *
Bushberry subgroup 13-07B	0.50
* * *	* *
Strawberry	4.0
Swiss chard	3.0
* * *	* *

* * * * *

[FR Doc. 2010–6498 Filed 3–23–10; 8:45 am]

BILLING CODE 6560–50–S

DEPARTMENT OF HOMELAND SECURITY

Federal Emergency Management Agency

44 CFR Part 67

[Docket ID FEMA–2010–0003]

Final Flood Elevation Determinations

AGENCY: Federal Emergency Management Agency, DHS.

ACTION: Final rule.

SUMMARY: Base (1% annual-chance) Flood Elevations (BFEs) and modified BFEs are made final for the communities listed below. The BFEs and modified BFEs are the basis for the floodplain management measures that each community is required either to adopt or to show evidence of being already in effect in order to qualify or remain qualified for participation in the National Flood Insurance Program (NFIP).

DATES: The date of issuance of the Flood Insurance Rate Map (FIRM) showing BFEs and modified BFEs for each community. This date may be obtained by contacting the office where the maps are available for inspection as indicated in the table below.

ADDRESSES: The final BFEs for each community are available for inspection at the office of the Chief Executive Officer of each community. The respective addresses are listed in the table below.

FOR FURTHER INFORMATION CONTACT: Kevin C. Long, Acting Chief, Engineering Management Branch, Mitigation Directorate, Federal Emergency Management Agency, 500 C Street, SW., Washington, DC 20472, (202) 646–2820, or (e-mail) *kevin.long@dhs.gov.*

SUPPLEMENTARY INFORMATION: The Federal Emergency Management Agency (FEMA) makes the final determinations listed below for the modified BFEs for each community listed. These modified elevations have been published in newspapers of local circulation and ninety (90) days have elapsed since that publication. The Deputy Federal Insurance and Mitigation Administrator has resolved any appeals resulting from this notification.

This final rule is issued in accordance with section 110 of the Flood Disaster Protection Act of 1973, 42 U.S.C. 4104, and 44 CFR part 67. FEMA has developed criteria for floodplain management in floodprone areas in accordance with 44 CFR part 60.

Interested lessees and owners of real property are encouraged to review the proof Flood Insurance Study and FIRM available at the address cited below for each community. The BFEs and modified BFEs are made final in the communities listed below. Elevations at selected locations in each community are shown.

National Environmental Policy Act. This final rule is categorically excluded from the requirements of 44 CFR part 10, Environmental Consideration. An environmental impact assessment has not been prepared.

Regulatory Flexibility Act. As flood elevation determinations are not within the scope of the Regulatory Flexibility Act, 5 U.S.C. 601–612, a regulatory flexibility analysis is not required.

Regulatory Classification. This final rule is not a significant regulatory action under the criteria of section 3(f) of Executive Order 12866 of September 30, 1993, Regulatory Planning and Review, 58 FR 51735.

Executive Order 13132, Federalism. This final rule involves no policies that have federalism implications under Executive Order 13132.

Executive Order 12988, Civil Justice Reform. This final rule meets the applicable standards of Executive Order 12988.

List of Subjects in 44 CFR Part 67

Administrative practice and procedure, Flood insurance, Reporting and recordkeeping requirements.

■ Accordingly, 44 CFR part 67 is amended as follows:

PART 67—[AMENDED]

■ 1. The authority citation for part 67 continues to read as follows:

Authority: 42 U.S.C. 4001 *et seq.;* Reorganization Plan No. 3 of 1978, 3 CFR, 1978 Comp., p. 329; E.O. 12127, 44 FR 19367, 3 CFR, 1979 Comp., p. 376.

§ 67.11 [Amended]

■ 2. The tables published under the authority of § 67.11 are amended as follows:

Flooding source(s)	Location of referenced elevation	* Elevation in feet (NGVD) + Elevation in feet (NAVD) # Depth in feet above ground ∧ Elevation in meters (MSL) Modified	Communities affected
Village of Dansville, New York Docket No.: FEMA–B–1034			
Canaseraga Creek	In the northern annexation, west of State Route 63, east of the railroad, and approximately 2,800 feet north of Zerfass Road.	*607	Village of Dansville.
	In the northern annexation, just east of the railroad, approximately 1,500 feet north of Zerfass Road along the railroad.	*610	

* National Geodetic Vertical Datum.
+ North American Vertical Datum.
# Depth in feet above ground.
∧ Mean Sea Level, rounded to the nearest 0.1 meter.

ADDRESSES

Village of Dansville
Maps are available for inspection at 14 Clara Barton Street, Dansville, NY 14437.

Town of Sparta, New York Docket No.: FEMA–B–1025			
Canaseraga Creek	Just upstream of State Route 258/Flats Road	*576	Town of Sparta.
	Approximately 1.2 mile upstream of White Bridge Road	*614	

* National Geodetic Vertical Datum.
+ North American Vertical Datum.
# Depth in feet above ground.
∧ Mean Sea Level, rounded to the nearest 0.1 meter.

ADDRESSES

Town of Sparta
Maps are available for inspection at 8302 Kysorville-Byersville Road, Dansville, NY 14437.

Lee County, Illinois, and Incorporated Areas Docket No.: FEMA–B–1041			
Kyte River	Approximately 1,080 feet west of Thorpe Road	+770	Unincorporated Areas of Lee County.
	Approximately 125 feet west of Illinois Route 251	+771	

* National Geodetic Vertical Datum.
+ North American Vertical Datum.
# Depth in feet above ground.
∧ Mean Sea Level, rounded to the nearest 0.1 meter.

ADDRESSES

Unincorporated Areas of Lee County
Maps are available for inspection at the County Zoning Office, Old Lee County Courthouse, 3rd Floor, 112 East 2nd Street, Dixon, IL 61021.

Rock Island County, Illinois, and Incorporated Areas Docket No.: FEMA–B–1032			
Mississippi River	River Mile 449.4, approximately 0.65 mile upstream of the Mercer/Rock Island county boundary and 1.7 mile downstream of the confluence with Copperas Creek.	+555	Unincorporated Areas of Rock Island County, City of East Moline, City of Moline, City of Rock Island, Village of Andalusia, Village of Cordova, Village of Hampton, Village of Milan, Village of Port Byron, Village of Rapids City.
	The Whitside/Rock Island county boundary (River Mile 512.25), approximately 0.6 mile upstream of the confluence with Meredosia Ditch.	+588	
Sylvan Slough	The convergence with the Mississippi River (River Mile 482.7), approximately 0.3 mile downstream of Lock and Dam No. 15.	+565	City of Moline, City of Rock Island.

Flooding source(s)	Location of referenced elevation	* Elevation in feet (NGVD) + Elevation in feet (NAVD) # Depth in feet above ground ∧ Elevation in meters (MSL) Modified	Communities affected
	The divergence from the Mississippi River (River Mile 486.0), Cross Section I, approximately 0.17 mile upstream of Memorial Bridge (I–74).	+569	

* National Geodetic Vertical Datum.
+ North American Vertical Datum.
# Depth in feet above ground.
∧ Mean Sea Level, rounded to the nearest 0.1 meter.

ADDRESSES

City of East Moline
Maps are available for inspection at City Hall, 915 16th Avenue, East Moline, IL 61244.

City of Moline
Maps are available for inspection at City Hall, 619 16th Street, Moline, IL 61265.

City of Rock Island
Maps are available for inspection at City Hall, 1528 3rd Street, Rock Island, IL 61201.

Unincorporated Areas of Rock Island County
Maps are available for inspection at the County Courthouse, 1504 3rd Avenue, Rock Island, IL 61201.

Village of Andalusia
Maps are available for inspection at the Village Hall, 221 1st Street, Andalusia, IL 61232.

Village of Cordova
Maps are available for inspection at 906 Main Avenue, Cordova, IL 61242.

Village of Hampton
Maps are available for inspection at 520 1st Avenue, Hampton, IL 61256.

Village of Milan
Maps are available for inspection at the Village Hall, 405 East 1st Street, Milan, IL 61264.

Village of Port Byron
Maps are available for inspection at 120 South Main Street, Port Byron, IL 61275.

Village of Rapids City
Maps are available for inspection at 1204 4th Avenue, Rapids City, IL 61278.

Linn County, Iowa, and Incorporated Areas
Docket No.: FEMA–B–1035

Big Creek	South Ely Street	+713	City of Bertram.
	Big Creek Road	+719	
Cedar Lake	Entire shoreline	+727	City of Cedar Rapids.
Cedar River	1,300 feet downstream of the confluence with Indian Creek.	+711	City of Cedar Rapids.
	Just downstream of Edgewood Road	+730	
McClouds Run	1,373 feet downstream of Shaver Road Northwest	+728	City of Cedar Rapids.
	1,056 feet upstream of Shaver Road Northeast	+728	

* National Geodetic Vertical Datum.
+ North American Vertical Datum.
# Depth in feet above ground.
∧ Mean Sea Level, rounded to the nearest 0.1 meter.

ADDRESSES

City of Bertram
Maps are available for inspection at 930 1st Street Southwest, Cedar Rapids, IA 52404.

City of Cedar Rapids
Maps are available for inspection at 1201 6th Street Southwest, Cedar Rapids, IA 52404.

Audrain County, Missouri, and Incorporated Areas
Docket No.: FEMA–B–1031

Davis Creek	Just downstream of County Highway 15/Paris Road	+735	Unincorporated Areas of Audrain County.
	At Kentucky Road	+739	
South Fork Salt River	At County Highway J	+735	Unincorporated Areas of Audrain County.

* National Geodetic Vertical Datum.
+ North American Vertical Datum.
# Depth in feet above ground.
∧ Mean Sea Level, rounded to the nearest 0.1 meter.

Flooding source(s)	Location of referenced elevation	* Elevation in feet (NGVD) + Elevation in feet (NAVD) # Depth in feet above ground ∧ Elevation in meters (MSL) Modified	Communities affected
ADDRESSES **Unincorporated Areas of Audrain County** Maps are available for inspection at the County Courthouse, 101 North Jefferson Street, Mexico, MO 65265.			
Saunders County, Nebraska and Incorporated Areas **Docket No.: FEMA–B–1038**			
Cottonwood Creek	Approximately 2,000 feet upstream of County Road Q	+1313	Unincorporated Areas of Saunders County, Village of Prague.
	Just upstream of Railroad Avenue	+1332	
	Just upstream of State Highway 79	+1335	
Platte River (with levee)	Just upstream of U.S. Highway 6	+1064	Unincorporated Areas of Saunders County, Village of Leshara, Village of Morse Bluff.
	Just upstream of State Highway 64	+1159	
	At State Highway 79	+1277	
Platte River (without levee)	Just upstream of U.S. Highway 6	+1064	Unincorporated Areas of Saunders County, Village of Leshara, Village of Morse Bluff.
	Just upstream of State Highway 64	+1154	
	At State Highway 79	+1277	

* National Geodetic Vertical Datum.
+ North American Vertical Datum.
# Depth in feet above ground.
∧ Mean Sea Level, rounded to the nearest 0.1 meter.

ADDRESSES

Unincorporated Areas of Saunders County

Maps are available for inspection at the County Courthouse, 433 North Chestnut Street, Wahoo, NE 68066.

Village of Leshara

Maps are available for inspection at the Village Hall, 210 Summit Street, Leshara, NE 68064.

Village of Morse Bluff

Maps are available for inspection at the Village Hall, 440 2nd Street, Morse Bluff, NE 68648.

Village of Prague

Maps are available for inspection at the Village Hall, 401 West Center Avenue, Prague, NE 68050.

(Catalog of Federal Domestic Assistance No. 97.022, "Flood Insurance.")

Dated: March 11, 2010.

Sandra K. Knight,

Deputy Federal Insurance and Mitigation Administrator, Mitigation, Department of Homeland Security, Federal Emergency Management Agency.

[FR Doc. 2010–6421 Filed 3–23–10; 8:45 am]

BILLING CODE 9110–12–P

FEDERAL COMMUNICATIONS COMMISSION

47 CFR Part 25

[ET Docket No. 98–206; FCC 03–97]

Order to Deny Petitions for Reconsideration of MVDDS Technical and Licensing Rules in the 12 GHz Band

AGENCY: Federal Communications Commission.

ACTION: Final rule; announcement of effective date.

SUMMARY: In this document, the Commission announces that the Office of Management and Budget (OMB) has approved, for a period of three years, the information collection requirements associated with § 25.146 of the Commission's rules, and that this rule will take effect as of the date of this document. On July 25, 2003, the Commission published the summary document of the Fourth Memorandum Opinion and Order, In the Matter of Amendment of Parts 2 and 25 of the Commission's Rules to Permit Operation of NGSO FSS Systems Co–Frequency with GSO and Terrestrial Systems in the Ku–Band Frequency Range; Amendment of the Commission's Rules to Authorize Subsidiary Terrestrial Use of the 12.2–12.7 GHz Band by Direct Broadcast Satellite Licensees and Their Affiliates; and Applications of Broadwave USA, PDC Broadband Corporation and Satellite Receivers, Ltd. To Provide a Fixed Service in the 12.2–12.7 GHz Band, ET Docket No. 98–206, FCC 03–97, at 68 FR 43942. This published item stated that the Commission will publish a document in the **Federal Register** announcing when

OMB approval for the rule section which contains information collection requirements has been received and when the revised rule will take effect. This document is consistent with the statement in the published summary document of the Fourth Memorandum Opinion and Order.

DATES: The amendments to § 25.146 published at 68 FR 43946, July 25, 2003 are effective on March 24, 2010.

FOR FURTHER INFORMATION CONTACT: Cathy Williams on (202) 418–2918 or send an email to: *Cathy.Williams@fcc.gov.*

SUPPLEMENTARY INFORMATION: This document announces that, on August 13, 2003, OMB approved, for a period of three years, the information collection requirements contained in § 25.146 of the Commission's rules. The Commission publishes this document to announce that § 25.146 published at 68 FR 43942, July 25, 2003 is effective on the date of publication of this document in the **Federal Register**. If you have any comments on the burden estimates, or how the Commission can improve the collections and reduce any burdens caused thereby, please contact Cathy Williams, Federal Communications Commission, Room 1–C823, 445 12th Street, SW., Washington, DC 20554. Please include OMB Control Number 3060–1014 in your correspondence. The Commission also will accept your comments via the Internet if you send them to PRA@fcc.gov. To request materials in accessible formats for people with disabilities (Braille, large print, electronic files, audio format), send an e–mail to fcc504@fcc.gov or call the Consumer & Governmental Affairs Bureau at (202)418–0530 (voice), (202) 418–0432 (TTY).

Federal Communications Commission.

Marlene H. Dortch,

Secretary, Office of the Secretary, Office of Managing Director.

[FR Doc. 2010–6450 Filed 3–23–10; 8:45 am]

BILLING CODE 6712–01–S

DEPARTMENT OF DEFENSE

Defense Acquisition Regulations System

48 CFR Chapter 2

Defense Federal Acquisition Regulation Supplement; Appendix A, Armed Services Board of Contract Appeals, Part 1—Charter

AGENCY: Defense Acquisition Regulations System, Department of Defense (DoD).

ACTION: Final rule.

SUMMARY: DoD is issuing the updated Charter of the Armed Services Board of Contract Appeals (ASBCA), dated May 14, 2007. The ASBCA is chartered to serve as the authorized representative of the Secretary of Defense and the Secretaries of the Army, Navy, and Air Force in hearing, considering, and determining appeals by contractors from decisions of contracting officers or their authorized representatives or other authorities regarding claims on contracts under the Contract Disputes Act of 1978 or other remedy-granting provisions.

DATES: *Effective Date:* March 24, 2010.

FOR FURTHER INFORMATION CONTACT: Ms. Meredith Murphy, Defense Acquisition Regulations System, OUSD (AT&L) DPAP (DARS), 3060 Defense Pentagon, Room 3B855, Washington, DC 20301–3060, Telephone 703–602–1302; facsimile 703–602–0350.

SUPPLEMENTARY INFORMATION:

A. Background

This publication of Appendix A of the Defense Federal Acquisition Regulation Supplement (DFARS) updates the Charter of the ASBCA from the most recent prior version, dated July 1, 1979, to its latest version, dated May 14, 2007. The updated Charter implements changes to ASBCA internal administration to better support the Board's mission of hearing, considering, and determining appeals by contractors from decisions of contracting officers or their authorized representatives or other authorities on disputed questions. In addition to minor administrative changes, the following substantive changes are made to the Charter:

1. The two-year term limits for the Chairman and Vice-Chairmen are removed at paragraph 2.

2. The Board is granted, at paragraph 5, all powers necessary and incident to the proper performance of its duties, including authority to issue methods of procedures and rules and regulations for its conduct and for the preparation and presentation of appeals and issuance of opinions.

B. Regulatory Flexibility Act

The Regulatory Flexibility Act does not apply to this rule. This final rule does not constitute a significant DFARS revision within the meaning of FAR 1.501 and public comment is not required in accordance with 41 U.S.C. 418b(a).

C. Paperwork Reduction Act

This rule does not impose any new information collection requirements that require the approval of the Office of Management and Budget under 44 U.S.C. 3501, *et seq.*

List of Subjects in 48 CFR Appendix A

Government procurement.

Ynette R. Shelkin,

Editor, Defense Acquisition Regulations System.

■ Therefore, DoD is amending 48 CFR Appendix A to Chapter 2 as follows:

■ 1. The authority citation for 48 CFR Appendix A to Chapter 2 continues to read as follows:

Authority: 41 U.S.C. 421 and 48 CFR chapter 1.

■ 2. Appendix A is amended by revising Part 1—Charter, to read as follows:

Appendix A to Chapter 2—Armed Services Board of Contract Appeals

* * * * *

(Revised DATE)

Armed Services Board of Contract Appeals

Approved 1 May 1962.
Revised 1 May 1969.
Revised 1 September 1973.
Revised 1 July 1979.
Revised 27 June 2000.
Revised 14 May 2007.

Part 1—Charter

1. There is created the Armed Services Board of Contract Appeals which is hereby designated as the authorized representative of the Secretary of Defense, the Secretary of the Army, the Secretary of the Navy and the Secretary of the Air Force, in hearing, considering and determining appeals by contractors from decisions of contracting officers or their authorized representatives or other authorities on disputed questions. These appeals may be taken (a) pursuant to the Contract Disputes Act of 1978 (41 U.S.C. Sect. 601, *et seq.*), (b) pursuant to the provisions of contracts requiring the decision by the Secretary of Defense or by a Secretary of a Military Department or their duly authorized representative, or (c) pursuant to the provisions of any directive whereby the Secretary of Defense or the Secretary of a Military Department or their authorized representative has granted a right of appeal not contained in the contract on any matter consistent with the contract appeals procedure. The Board may determine contract disputes for other departments and agencies by agreement as permitted by law. The Board shall operate under general policies established or approved by the Under Secretary of Defense for Acquisition, Technology and Logistics and may perform other duties as directed not inconsistent with the Contract Disputes Act of 1978.

2. Membership of the Board shall consist of attorneys at law who have been qualified in the manner prescribed by the Contract Disputes Act of 1978. Members of the Board are hereby designated Administrative Judges. There shall be appointed from the Judges of the Board a Chairman and two or more Vice-Chairmen. Appointment of the Chairman and

Vice-Chairmen and other Judges of the Board shall be made by the Under Secretary of Defense for Acquisition, Technology and Logistics, the General Counsel of the Department of Defense, and the Assistant Secretaries of the Military Departments responsible for acquisition. The Chairman may designate a Judge of the Board to serve as an Acting Chairman or Acting Vice Chairman.

3. It shall be the duty and obligation of the Judges of the Armed Services Board of Contract Appeals to decide appeals on the record of the appeal to the best of their knowledge and ability in accordance with applicable contract provisions and in accordance with law and regulation pertinent thereto.

4. The Chairman of the Board shall be responsible for establishing appropriate divisions of the Board to provide for the most effective and expeditious handling of appeals. The Chairman shall designate one Judge of each division as the division head. The Chairman may refer an appeal of unusual difficulty, significant precedential importance, or serious dispute within the normal decision process for decision by the senior deciding group. The division heads and the Chairman and Vice-Chairmen, together with, if applicable, the author of the decision so referred, shall constitute the senior deciding group of the Board. The decision of the Board in cases so referred to the senior deciding group shall be by majority vote of the participating Judges of that group. A majority of the Judges of a division shall constitute a quorum for the transaction of the business of each, respectively. Decisions of the Board shall be by majority vote of the Judges of a division participating and the Chairman and a Vice-Chairman, unless the Chairman refers the appeal for decision by the senior deciding group. An appeal involving a small claim as defined by the Contract Disputes Act of 1978 may be decided by a single Judge or fewer Judges of the Board than hereinbefore provided for cases of unlimited dollar amount, under accelerated or expedited procedures as provided in the Rules of the Board and the Contract Disputes Act of 1978.

5. The Board shall have all powers necessary and incident to the proper performance of its duties. The Board has the authority to issue methods of procedure and rules and regulations for its conduct and for the preparation and presentation of appeals and issuance of opinions.

6. Any Judge of the Board or any examiner, designated by the Chairman, shall be authorized to hold hearings, examine witnesses, and receive evidence and argument. A Judge of the Board shall have authority to administer oaths and issue subpoenas as specified in the Contract Disputes Act of 1978. In cases of contumacy or refusal to obey a subpoena, the Chairman may request orders of the court in the manner prescribed in the Contract Disputes Act of 1978.

7. The Chairman shall be responsible for the internal organization of the Board and for its administration. He shall provide within approved ceilings for the staffing of the Board with non-Judge personnel, including hearing examiners, as may be required for the performance of the functions of the Board. The Chairman shall appoint a Recorder of the Board. All personnel shall be responsible to and shall function under the direction, supervision and control of the Chairman. Judges shall decide cases independently.

8. The Board will be serviced by the Department of the Army for administrative support as required for its operations. Administrative support will include budgeting, funding, fiscal control, manpower control and utilization, personnel administration, security administration, supplies, and other administrative services. The Departments of the Army, Navy, Air Force and the Office of the Secretary of Defense will participate in financing the Board's operations on an equal basis and to the extent determined by the Under Secretary of Defense (Comptroller). The cost of processing appeals for departments and agencies other than those in the Department of Defense will be reimbursed.

9. Within 30 days following the close of a calendar quarter, the Chairman shall forward a report of the Board's proceedings for the quarter to the Under Secretary of Defense for Acquisition, Technology and Logistics, the General Counsel of the Department of Defense, the Assistant Secretaries of the Military Departments responsible for acquisition, and to the Director of the Defense Logistics Agency. The Chairman of the Board will also furnish the Secretary of Defense, the General Counsel of the Department of Defense, the Secretaries of the Military Departments, and the Director of the Defense Logistics Agency, an annual report containing an account of the Board's transactions and proceedings for the preceding fiscal year.

10. The Board shall have a seal bearing the following inscription: "Armed Services Board of Contract Appeals." This seal shall be affixed to all authentications of copies of records and to such other instruments as the Board may determine.

11. This revised charter is effective May 14, 2007.

Approved:

(signed) Kenneth J. Krieg (14 May 2007),

Under Secretary of Defense (Acquisition, Technology and Logistics).

(signed) William J. Haynes II,

General Counsel of the Department of Defense.

(signed) Claude M. Bolton, Jr.,

Assistant Secretary of the Army (Acquisition, Logistics, & Technology).

(signed) Delores M. Etter,

Assistant Secretary of the Navy (Research, Development & Acquisition).

(signed) Sue C. Peyton,

Assistant Secretary of the Air Force (Acquisition).

* * * * *

[FR Doc. 2010–6524 Filed 3–23–10; 8:45 am]

BILLING CODE 5001–08–P

Proposed Rules

Federal Register
Vol. 75, No. 56
Wednesday, March 24, 2010

This section of the FEDERAL REGISTER contains notices to the public of the proposed issuance of rules and regulations. The purpose of these notices is to give interested persons an opportunity to participate in the rule making prior to the adoption of the final rules.

DEPARTMENT OF ENERGY

Federal Energy Regulatory Commission

18 CFR Part 40

[Docket No. RM09–18–000; 130 FERC ¶61,204]

Revision to Electric Reliability Organization Definition of Bulk Electric System

March 18, 2010.

AGENCY: Federal Energy Regulatory Commission, Energy.

ACTION: Notice of proposed rulemaking.

SUMMARY: The Commission proposes to direct the Electric Reliability Organization (ERO) to revise its definition of the term "bulk electric system" to include all electric transmission facilities with a rating of 100 kV or above. The Commission proposes that a Regional Entity must seek ERO and Commission approval before exempting any facility rated at 100 kV or above from compliance with mandatory Reliability Standards. The Commission believes that a 100 kV threshold for identifying bulk electric system facilities will protect the reliability of the bulk electric system. The proposal would also provide consistency across the nation's reliability regions regarding the identification of bulk electric system facilities.

DATES: Comments are due May 10, 2010.

ADDRESSES: You may submit comments, identified by docket number by any of the following methods:

- *Agency Web Site: http://ferc.gov.* Documents created electronically using word processing software should be filed in native applications or print-to-PDF format and not in a scanned format.
- *Mail/Hand Delivery:* Commenters unable to file comments electronically must mail or hand deliver an original and 14 copies of their comments to: Federal Energy Regulatory Commission, Office of the Secretary, 888 First Street, NE., Washington, DC 20426.

FOR FURTHER INFORMATION CONTACT:

Kumar Agarwal (Technical Information), Office of Electric Reliability, Federal Energy Regulatory Commission, 888 First Street, NE., Washington, DC 20426. (202) 502–8923.
Robert Snow (Technical Information), Office of Electric Reliability, Federal Energy Regulatory Commission, 888 First Street, NE., Washington, DC 20426. (202) 502–6516.
Jonathan First (Legal Information), Office of General Counsel, 888 First Street, NE., Washington, DC 20426. (202) 502–8529.

SUPPLEMENTARY INFORMATION:

Notice of Proposed Rulemaking

1. The Commission proposes to direct the Electric Reliability Organization (ERO) to revise its definition of the term "bulk electric system" to include all electric transmission facilities with a rating of 100 kV or above. The Commission proposes that a Regional Entity must seek ERO and Commission approval before exempting any facility rated at 100 kV or above from compliance with mandatory Reliability Standards. The Commission believes that a 100 kV threshold for identifying bulk electric system facilities will protect the reliability of the bulk electric system. The proposal would also provide consistency across the nation's reliability regions regarding the identification of bulk electric system facilities.[1]

I. Background

A. Section 215 of the Federal Power Act

2. On August 8, 2005, the Energy Policy Act of 2005 (EPAct) was enacted into law. Title XII of EPAct added a new section 215 to the Federal Power Act (FPA),[2] which requires a Commission-certified ERO to develop mandatory and enforceable Reliability Standards, subject to Commission review and approval. Once approved, the Reliability Standards may be enforced by the ERO, subject to Commission oversight, or by the Commission independently.[3]

3. In February 2006, the Commission issued Order No. 672,[4] implementing section 215 of the FPA. Pursuant to Order No. 672, the Commission certified one organization, the North American Electric Reliability Corporation (NERC), as the ERO.[5]

B. Order No. 693

4. On March 16, 2007, in Order No. 693,[6] pursuant to section 215(d) of the FPA,[7] the Commission approved 83 Reliability Standards proposed by the NERC, the Commission-certified ERO.[8] In addition, Order No. 693 addressed the applicability of mandatory Reliability Standards to the Bulk-Power System.

5. In Order No. 693, the Commission explained that section 215(a) of the FPA defines Bulk-Power System as:

> (A) Facilities and control systems necessary for operating an interconnected electric energy transmission network (or any portion thereof) and
> (B) Electric energy from generating facilities needed to maintain transmission system reliability. The term does not include facilities used in the local distribution of electric energy.[9]

The Commission observed that NERC defines "bulk electric system" as follows:

> As defined by the Regional Reliability Organization, the electrical generation resources, transmission lines, interconnections with neighboring systems, and associated equipment, generally operated at voltages of 100 kV or higher. Radial transmission facilities serving only load with

[1] The Commission is not proposing any new or modified text to its regulations.

[2] Public Law 109–58, Title XII, Subtitle A, 119 Stat. 594, 941 (2005) (codified at 16 U.S.C. 824o).

[3] *See* 16 U.S.C. 824o(e)(3).

[4] *Rules Concerning Certification of the Electric Reliability Organization; and Procedures for the Establishment, Approval, and Enforcement of Electric Reliability Standards,* Order No. 672, FERC Stats. & Regs. ¶ 31,204 (2006), *order on reh'g,* Order No. 672–A, FERC Stats. & Regs. ¶ 31,212 (2006).

[5] *See North American Electric Reliability Corp.,* 116 FERC ¶ 61,062 (*ERO Certification Order*), *order on reh'g and compliance,* 117 FERC ¶ 61,126 (2006).

[6] *See Mandatory Reliability Standards for the Bulk-Power System,* Order No. 693, FERC Stats. & Regs. ¶ 31,242, *order on reh'g,* Order No. 693–A, 120 FERC ¶ 61,053 (2007) (directing improvements to 56 of the 83 approved Reliability Standards and leaving 24 Reliability Standards as pending until further information is provided).

[7] 16 U.S.C. 824o(d) (2006).

[8] *North American Electric Reliability Corp.,* 116 FERC ¶ 61,062, *order on reh'g and compliance,* 117 FERC ¶ 61,126 (2006), *aff'd sub nom. Alcoa Inc.* v. *FERC,* No. 06–1426 (DC Cir.) (certifying NERC as the ERO responsible for the development and enforcement of mandatory Reliability Standards).

[9] 16 U.S.C. 824o(a).

one transmission source are generally not included in this definition.[10]

Additionally, the Commission recognized that this definition provides discretion to define "bulk electric system" without any stated limitation and without ERO oversight. Nevertheless, it accepted the definition.

6. The Commission stated in Order No. 693 that, "at least for an initial period, the Commission will rely on the NERC definition of bulk electric system and NERC's registration process to provide as much certainty as possible regarding the applicability to and the responsibility of specific entities to comply with the Reliability Standards * * *."[11] Further, the Commission explained that some regional definitions of bulk electric system exclude facilities below 230 kV and transmission lines that serve Washington, DC and New York City:

> Although we are accepting the NERC definition of bulk electric system and NERC's registration process for now, the Commission remains concerned about the need to address the potential for gaps in coverage of facilities. For example, some current regional definitions of bulk electric system exclude facilities below 230 kV and transmission lines that serve major load centers such as Washington, DC and New York City. The Commission intends to address this matter in a future proceeding.[12]

The Commission directed NERC to submit an informational filing that includes regional definitions of bulk electric system and any regional documents that identify critical facilities to which the Reliability Standards apply (*i.e.,* facilities below 100 kV).

C. NERC's June 14, 2007 Filing

7. In a June 14, 2007 filing, NERC submitted the regional definitions of bulk electric system.[13] NERC represented that "[e]ach Regional Entity utilizes the definition of bulk electric system in the NERC Glossary of Terms Used in Reliability Standards (NERC Glossary); however, as permitted by that definition * * * several Regional Entities define specific characteristics or criteria that the Regional Entity uses to identify the bulk electric system facilities for its members. In addition, the Reliability Standards apply to load shedding and special protection relay facilities below 100 kV, which are monitored by Regional Entities, in compliance with NERC's Reliability Standards."[14]

8. In the June 2007 Filing, NERC indicated that four Regional Entities, Texas Regional Entity, Florida Reliability Coordinating Council (FRCC), Midwest Reliability Organization, and SERC Reliability Corporation, use the NERC definition of bulk electric system without modification. In a supplemental filing, NERC informed the Commission that Western Electricity Coordinating Council (WECC) uses the NERC definition alone in its implementation of Regional Entity activities.[15]

9. Three other Regional Entities, ReliabilityFirst Corporation (ReliabilityFirst), Southwest Power Pool (SPP Regional Entity) and Northeast Power Coordinating Council, Inc. (NPCC) stated that they use the NERC definition supplemented with additional criteria. For example, SPP Regional Entity indicated that it uses the criteria specified in the NERC Statement of Registry Criteria (with one exception). ReliabilityFirst supplemented the NERC definition with specific voltage-based inclusions and exclusions. For example, ReliabilityFirst includes "lines operated at voltage of 100 kV or higher."[16] ReliabilityFirst excludes certain radial facilities, balance of generating plant control and operation functions, and "all other facilities operated at voltages below 100 kV."

10. NERC's June 2007 Filing indicated that NPCC also asserts that it uses the NERC definition of bulk electric system supplemented by additional criteria. Unlike the supplemental criteria of other Regional Entities, however, NPCC utilizes a significantly different approach to identifying bulk electric system elements. According to NERC, NPCC identifies elements of the bulk electric system using an impact-based methodology, not a voltage-based methodology. Further, as part of its approach to defining the bulk electric system, NPCC includes its own definition of "bulk power system" as follows:

> The interconnected electrical systems within northeastern North America comprised of system elements on which faults or disturbances can have a significant adverse impact outside of the local area.

According to NERC, NPCC analyzes all system elements within its footprint regardless of size (voltage) to determine impact based on this definition. NERC's filing included NPCC's "*Classification of Bulk Power System Elements,*" which provides further information on the above definition and how it is applied.[17] Each balancing authority conducts studies in accordance with NPCC Document A–10 to develop a list of Bulk-Power System assets, which must be approved by NPCC's Task Force on System Studies.

D. NPCC Identification of Bulk Electric System Facilities

11. In a December 2008 order, the Commission directed NERC and NPCC to submit to the Commission a comprehensive list of bulk electric system facilities located within the United States portion of the NPCC region.[18] The Commission explained that there appeared to be conflicting lists of bulk electric system elements developed by one of the balancing authorities in the United States portion of the NPCC region. Further, it was not clear which, if any, of the lists developed using NPCC's document A–10 were submitted to NPCC or approved by NPCC's Task Force on System Studies. The December 2008 Order also stated that "[t]he Commission believes that to best achieve reliability, the applicable NPCC list should be consistent with both the NPCC impact-based methodology and with the interpretations of bulk electric system elements in other regional entities."[19]

12. In response, NERC and NPCC submitted a compliance filing on February 20, 2009, as supplemented on April 21, 2009. The compliance filing indicated that the "NPCC Approved BES List" of June 2007 is the only listing of bulk electric system facilities approved by NPCC and is the current list of facilities within the U.S. portion of NPCC to which the NERC Reliability Standards apply.[20] The filing indicated that a majority of the 115 kV and 138 kV transmission facilities in the NYISO Balancing Authority Area of the NPCC

[10] Order No. 693, FERC Stats. & Regs. ¶ 31,242 at P 51.

[11] *Id.* P 75; *see also* Order No. 693–A, 120 FERC ¶ 61,053 at P 19 ("the Commission will continue to rely on NERC's definition of bulk electric system, with the appropriate regional differences, and the registration process until the Commission determines in future proceedings the extent of the Bulk-Power System").

[12] Order No. 693, FERC Stats. & Regs. ¶ 31,242 at P 77 (footnotes omitted).

[13] NERC Informational Filing, Docket No. RM06–16–000 (June 14, 2007) (June 2007 Filing).

[14] *Id.* at 7.

[15] NERC Supplemental Informational Compliance Filing, Docket No. RM06–16–000 (March 6, 2009).

[16] June 2007 Filing at 10.

[17] NERC June 2007 Filing, Attachment 1 (NPCC Document A–10, *Classification of Bulk Power System Elements* (April 28, 2007)).

[18] *North American Electric Reliability Corp.,* 125 FERC ¶ 61,295 (2008) (December 2008 Order).

[19] *Id.* P 13.

[20] NERC and NPCC Compliance Filing at 5 (February 20, 2009), Docket No. RC09–3–000. The February 20 Compliance Filing also indicated that the NPCC approved list of bulk electric system elements was not developed pursuant to NPCC's Document A–10, *Classification of Bulk Power System Elements,* identified in NERC's June 2007 Filing. Rather, the approved NPCC list was developed pursuant to an earlier version of the NPCC impact-based methodology.

region are excluded from the bulk electric system and, hence, compliance with mandatory Reliability Standards. In addition, NPCC excludes approximately seven higher voltage (*e.g.,* 230 kV, 345 kV and 500 kV) transmission facilities, some connecting to nuclear power plants.

13. NERC and NPCC also provided information on generation facilities in the U.S. portion of NPCC that are subject to compliance with mandatory Reliability Standards. According to the filing, 92 percent of the total gross megavolt-ampere (MVA) in the NYISO Balancing Authority Area, and 97 percent of the total gross MVA in the NE–ISO Balancing Authority Area, are subject to compliance with mandatory Reliability Standards. That information also indicates that numerous transmission lines at 100 kV and above that interconnect with the registered generation facilities are excluded from NPCC's list of bulk electric system facilities.

14. In September 2009, NERC and NPCC submitted a compliance filing in which NPCC evaluated the impact and usefulness of a 100 kV "bright-line" bulk electric system definition as well as another optional method which utilizes Transmission Distribution Factor calculations to determine reliability impacts. The NPCC definition would exclude radial portions of the transmission system.[21] However, NPCC states that it continues to believe that its current impact-based approach provides an adequate level of reliability and, therefore, intends to continue to apply the impact-based approach in classifying its bulk-electric system elements.[22]

II. Discussion

15. As discussed in further detail below, based on our experience in implementing FPA section 215 over the past four years and events that have either caused or contributed to significant bulk electric system disturbances and cascading outages, the Commission has reevaluated the definition of "bulk electric system" contained in Commission-approved NERC Glossary and has determined that the definition needs to be modified in order to protect the reliability of the Nation's Bulk-Power System.[23] Accordingly, the Commission proposes to direct the ERO to revise, within 90 days of the effective date of a final rule in this proceeding, the ERO's definition of the term "bulk electric system" to include all electric transmission facilities with a rating of 100 kV or above.[24]

16. This proposal would eliminate the discretion provided in the current definition for a Regional Entity to define "bulk electric system" within a region. Importantly, however, we emphasize that we are not proposing to eliminate all regional variations and we do not anticipate that the proposed change would affect most entities. The goal of the proposal is to eliminate significant inconsistencies across regions and provide a backstop review to ensure that any regional variations do not compromise reliability and that facilities that could significantly impact reliability are subject to mandatory rules. Simply put, if the Commission does not take this step, we are concerned that we would not be fulfilling the intent of Congress in enacting section 215 to protect reliability of the Nation's Bulk-Power System, including reliability in major cities. The proposed change in definition and our rationale and technical support for a new definition, are discussed in more detail below.

17. The current ERO definition provides a "general" 100 kV threshold for identifying "bulk electric system" facilities:

> As defined by the Regional Reliability Organization, the electrical generation resources, transmission lines, interconnections with neighboring systems, and associated equipment, generally operated at voltages of 100 kV or higher. Radial transmission facilities serving only load with one transmission source are generally not included in this definition.[25]

The definition, however, as noted above, also provides discretion for a Regional Entity[26] to define "bulk electric system" without any stated limitation or ERO oversight. Although the Commission accepted this definition in our early implementation of FPA section 215, in Order No. 672,[27] we also expressed certain reservations about the definition and in particular a preference for uniformity of Reliability Standards. More recently, we have repeated our preference for a uniformity of definitions used by the ERO and the Regional Entities.[28] Similarly, the Commission believes that there should be uniformity in the definition of bulk electric system and the identification of facilities that are subject to mandatory Reliability Standards. Without such uniformity, and assurance of a strong justification for not complying with a uniform definition, the risk is that the reliability of the electric system could be compromised.

18. The Commission recognizes that there may be limited circumstances when a variation from the proposed uniform 100 kV threshold is appropriate. The Commission proposes that a Regional Entity must seek ERO approval before it exempts any transmission facility rated at 100 kV or above from compliance with mandatory Reliability Standards. Pursuant to this proposal, the ERO must submit to the Commission for review on a facility-by-facility basis any ERO-approved exception to the proposed threshold that all transmission facilities at 100 kV or above, except for radial transmission facilities serving only load, are subject to compliance with mandatory Reliability Standards. Any such submission must also include adequate supporting information explaining why

[21] NERC and NPCC Compliance Filing and Assessment of Bulk Electric System Report (September 21, 2009), Docket No. RC09–3–000. NPCC would define "radial portions of the transmission system to include (1) an area serving load that is connected to the rest of the network at a single transmission substation at a single transmission voltage by one or more transmission circuits; (2) tap lines and associated facilities which are required to serve local load only; (3) transmission lines that are operated open for normal operation; or (4) additionally as an option, those portions of the NPCC transmission system operated at 100 kV or higher not explicitly designated as a BES path for generation which have a one percent or less participation in area, regional or inter regional power transfers. *Id.* at 11.

[22] *Id.* at 7–8. *See also id.* at 14 ("[i]f directed by the Commission to adopt the developed [bulk electric system] definition for U.S. registered entities within the NPCC footprint, NPCC would need additional time to carefully consider and develop a more extensive and detailed implementation plan").

[23] As with Reliability Standards, the Commission reviews and approves revisions to the NERC glossary pursuant to FPA section 215(d)(2). Further, the Commission may direct a modification to address a specific matter identified by the Commission pursuant to section 215(d)(5). *See* Order No. 693, FERC Stats. & Regs. ¶ 31,242 at P 1893–98.

[24] While the Commission indicated in Order No. 693, FERC Stats. & Regs. ¶ 31,242 at P 77, that the Commission may reconsider the scope of the statutory term Bulk Power System in a future proceeding, in this proceeding we are addressing only the ERO's definition of the term bulk electric system.

[25] Order No. 693, FERC Stats. & Regs. ¶ 31,242 at P 51.

[26] In Order No. 693, the Commission recognized the Regional Entities as the appropriate statutory regional body, and directed the ERO to substitute "Regional Entity" for "Regional Reliability Organization" in mandatory Reliability Standards. *Id.* at P 157, 321.

[27] Order No. 672, FERC Stats. & Regs. ¶ 31,204 at P 290 ("[t]he Commission believes that uniformity of Reliability Standards should be the goal and practice, the rule rather than the exception").

[28] *Western Electricity Coordinating Council Regional Reliability Standard Regarding Automatic Time Error Correction,* Order No. 723, 127 FERC ¶ 61,176, at P 39 (2009) ("the Commission believes NERC, as a rule, should develop definitions that apply uniformly across the different regions. As a general goal, NERC should work to minimize the use of regional definitions and terminology * * *.").

it is appropriate to exempt a specific transmission facility that would otherwise satisfy the proposed 100 kV threshold. Only after Commission approval would the proposed exclusion take effect. Such review would allow flexibility where warranted while providing appropriate oversight to assure that there is a legitimate need for an exemption. The Commission seeks comment whether a corresponding revision to the ERO's Rules of Procedure to accommodate the proposed process is warranted.

19. Further, the Commission does not propose to change the ERO's statement that "[r]adial transmission facilities serving only load with one transmission source are generally not included in this definition." Likewise, as is currently the case, Regional Entities may identify "critical" facilities, rated at less than the 100 kV, that are subject to mandatory Reliability Standards, without seeking approval from the ERO and the Commission.[29]

20. The Commission believes that the proposed 100 kV threshold for identifying bulk electric system facilities is consistent with current reliability criteria. Most notably, NERC has applied a definition of bulk electric system that includes a 100 kV "general" threshold for decades.[30] As discussed above, seven of eight Regional Entities have adopted NERC's definition, including the 100 kV threshold, either verbatim or with limited additional criteria.[31] Significantly, ReliabilityFirst Regional Entity, which resulted from a merger of three historical reliability regions, successfully replaced three "legacy" definitions with a 100 kV threshold for defining bulk electric system facilities.[32] Moreover, the NERC Statement of Compliance Registry Criteria, which the ERO and Regional Entities use to determine which entities should be registered to comply with mandatory Reliability Standards, also utilizes a 100 kV threshold.[33] In fact, the Registry Criteria provide that a load serving entity should be subject to registration if its peak load exceeds 25 MW "and is directly connected to the bulk power (>100 kV) system * * *."[34] Likewise, the Registry Criteria provide that a transmission owner or transmission operator should be registered if it owns or operates "an integrated transmission element associated with the bulk power system 100 kV and above * * *."[35]

21. In addition, the Commission believes that there is adequate technical justification for the proposed 100 kV threshold for identifying bulk electric system facilities for reliability-related purposes. Events on facilities rated at 115 kV and 138 kV have either caused or contributed to significant bulk electric system disturbances and cascading outages. For example, a February 26, 2008 event in the FRCC region, which resulted in widespread outages, originated from a fault at a facility connected to the 138 kV transmission system. This event resulted in the loss of 24 transmission lines and loss of 4,300 MW of generation, associated with thirteen generating units, and disruption of electric service to more than three million customers for several hours on average.

22. Other recent events also evidence the impact of 115 and 138 kV facilities on bulk electric system reliability. On June 13, 2008, the electrical failure of a 138 kV motor operated switch on a 138 kV–13 kV transformer located in the ReliabilityFirst region resulted in the tripping of two transformers, one due to the electrical failure and the second due to inappropriate operation of an adjacent protection system. This event resulted in the tripping of three 138 kV–13kV transformers, three 138 kV transmission lines, and an estimated loss of approximately 150 MW of firm load in a critical high population density area. A June 27, 2007 event on 138 kV transmission lines in the NPCC region resulted in sequential tripping of the four 138 kV cable-circuits. The event resulted in the interruption of service to about 137,000 customers as well as the loss of five generators and six 138 kV transmission lines.

23. Transmission lines with a rating of 100–200 kV represent a significant portion of the total circuit miles of transmission within the bulk electric system.[36] As illustrated by the disturbances described above, the 100–200 kV facilities are important to reliable operations. Moreover, events that occur on the 100–200 kV facilities can result in consequences, sometimes severe, to the reliability of the higher kV system.

24. In addition, there are other compelling technical reasons for proposing a 100 kV threshold. Certain transmission lines in the U.S. portion of NPCC region are not identified as bulk electric system although these transmission lines extend into the footprint of another Regional Entity where they are considered bulk electric system facilities. For example, NPCC does not identify two 115 kV transmission lines—Falconer to Warren, and North Waverly to East Sayre—as part of the bulk electric system in its region even though the sections of these lines that connect to PJM's balancing authority area are considered bulk electric system within the Reliability First Corporation footprint.

25. Moreover, reliability coordinators within NPCC have declared transmission load relief (TLR) events, pursuant to Reliability Standard IRO–006–4, on certain transmission lines to protect reliability of the bulk electric system.[37] Yet, NPCC does not classify the transmission lines subject to the TLR events as bulk electric system

[29] *See* NERC June 2007 Filing at 14.

[30] *See, e.g.,* NERC Board of Trustees, Minutes of the Meeting at 2–3 (April 3–4, 1995) (noting adoption of definitions, including a definition of bulk electric system: "[t]he bulk electric system is a term commonly applied to that portion of an electric utility system, which encompasses the electrical generation resources, transmission lines, interconnections with neighboring systems, and associated equipment, generally operated at voltages of 100 kV or higher").

[31] We note that WECC has established a "BES definition Task Force," which is currently re-evaluating WECC's 100 kV threshold. This Task Force has previously considered options that include retaining WECC's current 100 kV threshold, adopting a 200 kV threshold, or adopting a "classification by voltage" definition. More recently, in December 2009, WECC's Task Force posted a proposal to retain the 100 kV threshold, and also allow for the exclusion of facilities with a rating above 100 kV based on a "material impact" assessment. Information regarding the Task Force's activities is available on the WECC Web site at: *http://www.wecc.biz/Standards/Development/BES/default.aspx.*

[32] *See* NERC June 2007 Filing at 11. One of the merged reliability councils in the ReliabilityFirst footprint had historically excluded transmission facilities with a rating below 230 kV from the definition of bulk electric system. *Id.* In an October 1, 2007 letter, ReliabilityFirst informed NERC of its transition plan to allow sufficient time for entities with facilities at voltages less than 230 kV to become compliant with mandatory Reliability Standards. Subsequently, ReliabilityFirst informed NERC that, as of December 2008, it completed the transition, and all entities within ReliabilityFirst "now subscribe to the stated bulk electric system definition and are required to comply with the NERC Reliability Standards in accordance with the new definition." NERC Supplemental Compliance Filing at 3 (March 6, 2009), Docket No. RM06–16–000.

[33] *NERC Statement of Registry Criteria,* Revision 5.0 (October 16, 2008) (Registry Criteria).

[34] *Id.* at 7.

[35] *Id.* at 9.

[36] In the Eastern Interconnection, there is a total of 182,288 transmission line circuit miles rated above 100 kV, of which approximately 103,983 transmission line circuit miles are rated between 100 kV and 200 kV, or 57 percent of the total. In the Western Interconnection, approximately 27,318 (or 41 percent) of a total 66,815 transmission line circuit miles consist of facilities rated between 100 kV and 200 kV. (Based on information from publicly available sources, including FERC Form 1. The figures exclude transmission lines owned by Federal and local governmental entities.)

[37] Pursuant to Reliability Standard IRO–006–4, the TLR procedure is used by reliability coordinators to prevent or manage potential or actual violations of "system operating limits" and "interconnection reliability operating limits" to maintain reliability of the bulk electric system.

facilities. For example, the New York Independent System Operator has declared TLR events on a flowgate named "Central East ties," multiple times, in some cases for more than twenty four hours, in a ninety-day period during 2009. The Central East ties consist of ten transmission elements, three of which operate at 115 kV, all of which were impacted during the TLR event.[38] Yet, the three 115 kV transmission elements are not bulk electric system facilities pursuant to NPCC's current regional definition of that term. This suggests that entities within NPCC operate their systems as if certain facilities are important to protect the reliability of the bulk electric system, even though NPCC does not identify the same transmission facilities as bulk electric system elements.

26. Thus, the Commission believes that its proposal to direct the ERO to consistently maintain a 100 kV threshold for identifying bulk electric system facilities for reliability purposes, with exceptions allowed only with ERO and Commission oversight, is justified based on (1) the need to eliminate inappropriate inconsistencies among regions, (2) the historical and current application of a 100 kV threshold to identify the bulk electric system for reliability purposes, and (3) the technical justification for a 100 kV threshold provided above, including events on facilities rated at 115 kV and 138 kV that have caused or contributed to significant bulk electric system disturbances and cascading outages.

27. As discussed above, information provided by the ERO indicates that seven of eight Regional Entities currently have regional definitions of "bulk electric system" that are consistent with the ERO definition, either verbatim or with limited additional criteria. Thus, the Commission does not believe that the proposal would have an immediate effect on entities in any Regional Entity other than NPCC. Based on NERC's and NPCC's responses to the Commission's December 2008 Order, it appears that a significant number of transmission lines in the U.S. portion of the NPCC region rated at 115 kV and 138 kV are currently excluded from NPCC's definition of bulk electric system. The Commission recognizes that, similar to the transition that occurred in the ReliabilityFirst region, entities within the U.S. portion of NPCC would likely require a reasonable period of time to ensure that they can comply with mandatory Reliability Standards for previously-exempt facilities. Therefore, the Commission proposes to allow a Regional Entity impacted by the Commission's final rule in this matter to submit a transition plan that allows a reasonable period of time for affected entities within that region to achieve compliance with respect to facilities that are subject to mandatory Reliability Standards for the first time.[39]

28. In summary, the Commission proposes to direct the ERO to submit to the Commission, within 90 days of the effective date of a final rule, a revised ERO definition of bulk electric system that provides a 100 kV threshold for facilities that are included in the bulk electric system and eliminates the currently-allowed discretion of a Regional Entity to define bulk electric system within its system without ERO or Commission oversight.[40] The Commission proposes that a Regional Entity must seek ERO and Commission approval before it exempts a transmission facility rated at 100 kV or above from compliance with mandatory Reliability Standards. A Regional Entity may develop a transition plan that allows a reasonable period of time for affected entities within that region to achieve compliance with respect to facilities that are subject to mandatory Reliability Standards for the first time.

III. Information Collection Statement

29. The Office of Management and Budget (OMB) regulations require approval of certain information collection requirements imposed by agency rules.[41] Upon approval of a collection(s) of information, OMB will assign an OMB control number and an expiration date. Respondents subject to the filing requirements of this rule will not be penalized for failing to respond to these collections of information unless the collections of information display a valid OMB control number. The Paperwork Reduction Act (PRA)[42] requires each federal agency to seek and obtain OMB approval before undertaking a collection of information directed to ten or more persons, or continuing a collection for which OMB approval and validity of the control number are about to expire.[43] The PRA defines the phrase "collection of information" to be the "obtaining, causing to be obtained, soliciting, or requiring the disclosure to third parties or the public, of facts or opinions by or for an agency, regardless of form or format, calling for either—(i) answers to identical questions posed to, or identical reporting or recordkeeping requirements imposed on ten or more persons, other than agencies, instrumentalities, or employees of the United States; or (ii) answers to questions posed to agencies, instrumentalities, or employees of the United States which are to be used for general statistical purposes."[44]

30. This NOPR proposes to direct the ERO to revise its definition of the term bulk electric system to provide a 100 kV threshold for identifying bulk electric system facilities and requiring ERO and Commission approval of a Regional Entity definition of bulk electric system that varies from the ERO's definition of the term. In Order No. 693, the Commission approved the ERO's definition of the term bulk electric system. The Commission also approved 83 Reliability Standards submitted by the ERO. The Commission's proposed action in this NOPR does not specify any information collection requirements. However, the proposal would likely result in certain responsible entities having to comply with mandatory Reliability Standards with respect to certain facilities in the 100 kV to 200 kV range for the first time. While the previously-approved Reliability Standards do not require reporting to the Commission, they do require responsible entities to develop and maintain certain information for a specified period of time, subject to inspection by the ERO or Regional Entities. Thus, the proposed revision to the ERO's definition of bulk electric system in this proceeding would likely increase the public reporting burden estimate provided in Order No. 693.[45]

[38] *See* North American Reliability Council, *Transmission Loading Relief Log* (June 2009), *https://www.crc.nerc.net/*.

[39] We note that for certain specific matters (such as operating reserves and protection), NPCC has more stringent criteria than NERC Reliability Standards, which NPCC refers to collectively as "NPCC Criteria." NPCC designates each Criteria with a "Document A" prefix, such as "NPCC Document A–6." These NPCC Criteria require the approval of two thirds of the NPCC membership, but are not submitted to the ERO or Commission for approval. The Commission's proposal here would not affect the applicability of NPCC Criteria that are not submitted to the ERO and Commission for approval. NPCC would not be required to apply NPCC Criteria based on a 100 kV threshold and, rather, could continue to determine the applicability of such criteria to facilities in the region based on NPCC's impact-based methodology.

[40] As discussed above, the Commission does not propose to change the provision of the ERO's definition that "[r]adial transmission facilities serving only load with one transmission source are generally not included in this definition." Likewise, Regional Entities may identify "critical" facilities, rated at less than the 100 kV, that are subject to mandatory Reliability Standards, without application to the ERO and the Commission.

[41] 5 CFR 1320.11.

[42] 44 U.S.C. 3501–20.

[43] 44 U.S.C. 3502(3)(A)(i), 44 U.S.C. 3507(a)(3).

[44] 44 U.S.C. 3502(3)(A).

[45] *See* Order No. 693, FERC Stats. and Regs. ¶ 31,242 at P 1904.

31. *Public Reporting Burden:* As discussed above, the Commission believes that only one Regional Entity, NPCC, would be immediately affected by the Commission's proposal. In particular, the Commission believes that transmission owners, transmission operators and transmission service providers in the U.S. portion of the NPCC region would be affected by the Commission's proposal. Based on registration information available on NPCC's Web site, it appears that approximately 33 transmission owners, transmission operators and transmission service providers in the U.S. portion of the NPCC region would potentially be affected by the Commission's proposal.[46] These entities are currently responsible for complying with applicable mandatory Reliability Standards approved by the Commission in Order No. 693 and subsequent orders. A final rule in this proceeding would result in the extension of compliance under these Reliability Standards to additional facilities within the U.S. portion of the NPCC region.

32. Based on currently available information, the Commission estimates that the increased Public Reporting Burden as follows:

Data collection	Number of respondents	Number of responses	Hours per respondent	Total annual hours
FERC–725–A Transmission Owners, Transmission Operators and Transmission Service Providers in the U.S. portion of the NPCC Region.	33	1	Reporting: 0 Recordkeeping: 500	Reporting: 0. Recordkeeping: 16,500.
Total	33	1	500	16,500

- *Total Annual Hours for Collection: (Reporting + Recordkeeping)* = 16,500 hours.

Information Collection Costs: The Commission seeks comments on the costs to comply with these requirements. It has projected the average annualized cost to be the total annual hours.

Recordkeeping = 16,500 @ $40/hour = $660,000.

Labor (file/record clerk @ $17 an hour + supervisory @ $23 an hour).

- Total costs = $ 660,000.
- *Title:* FERC–725–A Revision of Definition of Bulk Electric System.
- *Action:* Proposed Collection of Information.
- *OMB Control No.:* 1902–0244.
- *Respondents:* Business or other for profit, and/or not for profit institutions.
- *Frequency of Responses:* On Occasion.
- *Necessity of the Information:* The proposed revision to the ERO's definition of the term bulk electric system, if adopted, would implement the Congressional mandate of the Energy Policy Act of 2005 to develop mandatory and enforceable Reliability Standards to better ensure the reliability of the nation's Bulk-Power System. Specifically, the proposal would ensure that certain facilities needed for the reliable operation of the nation's bulk electric system are subject to mandatory and enforceable Reliability Standards.
- *Internal Review:* The Commission has reviewed the proposed directive that the ERO revise its current definition of bulk electric system and determined that the proposal is necessary to meet the statutory provisions of the Energy Policy Act of 2005. The Commission has assured itself, by means of internal review, that there is specific, objective support for the burden estimates associated with the information requirements.

33. Interested persons may obtain information on the reporting requirements by contacting: Federal Energy Regulatory Commission, 888 First Street, NE., Washington, DC 20426 [Attention: Michael Miller, Office of the Executive Director, Phone: (202) 502–8415, fax: (202) 273–0873, e-mail: *michael.miller@ferc.gov*]. Comments on the requirements of the proposed rule may also be sent to the Office of Information and Regulatory Affairs, Office of Management and Budget, Washington, DC 20503 [Attention: Desk Officer for the Federal Energy Regulatory Commission], e-mail: *oira_submission@omb.eop.gov.*

IV. Environmental Analysis

34. The Commission is required to prepare an Environmental Assessment or an Environmental Impact Statement for any action that may have a significant adverse effect on the human environment.[47] The Commission has categorically excluded certain actions from this requirement as not having a significant effect on the human environment. The actions proposed here fall within the categorical exclusion in the Commission's regulations for rules that are clarifying, corrective or procedural, for information gathering, analysis, and dissemination.[48] Accordingly, neither an environmental impact statement nor environmental assessment is required.

V. Regulatory Flexibility Act Certification

35. The Regulatory Flexibility Act of 1980 (RFA)[49] generally requires a description and analysis of final rules that will have significant economic impact on a substantial number of small entities. As discussed above, the Commission believes that the immediate effect of the proposed directive that the ERO revise its current definition of bulk electric system to establish a 100 kV threshold would likely be limited to certain transmission owners, transmission operators and transmission service providers in the U.S. portion of the NPCC region. Most transmission owners, transmission operators and transmission service providers do not fall within the definition of small entities.[50] The Commission estimates that approximately four of the 33 transmission owners, transmission operators and transmission services providers may fall within the definition of small entities.

36. Based on this understanding, the Commission certifies that this rule will not have a significant economic impact on a substantial number of small

[46] "NPPC Registered Entities as of January 13, 2010," available on the NPCC Web site: *http://www.npcc.org/.*

[47] *Regulations Implementing the National Environmental Policy Act,* Order No. 486, 52 FR 47897 (Dec. 17, 1987), FERC Stats. & Regs., Regs. Preambles 1986–1990 30,783 (1987).

[48] 18 CFR 380.4(a)(5).

[49] 5 U.S.C. 601–612.

[50] The RFA definition of "small entity" refers to the definition provided in the Small Business Act (SBA), which defines a "small business concern" as a business that is independently owned and operated and that is not dominant in its field of operation. *See* 15 U.S.C. 632 (2006). According to the SBA, a small electric utility is defined as one that has a total electric output of less than four million MWh in the preceding year.

entities. Accordingly, no regulatory flexibility analysis is required.

VI. Comment Procedures

37. The Commission invites interested persons to submit comments on the matters and issues proposed in this notice to be adopted, including any related matters or alternative proposals that commenters may wish to discuss. Comments are due May 10, 2010. Comments must refer to Docket No. RM09–18–000, and must include the commenter's name, the organization they represent, if applicable, and their address in their comments.

38. The Commission encourages comments to be filed electronically via the eFiling link on the Commission's Web site at *http://www.ferc.gov.* The Commission accepts most standard word processing formats. Documents created electronically using word processing software should be filed in native applications or print-to-PDF format and not in a scanned format. Commenters filing electronically do not need to make a paper filing.

39. Commenters that are not able to file comments electronically must send an original and 14 copies of their comments to: Federal Energy Regulatory Commission, Secretary of the Commission, 888 First Street, NE., Washington, DC 20426.

40. All comments will be placed in the Commission's public files and may be viewed, printed, or downloaded remotely as described in the Document Availability section below. Commenters on this proposal are not required to serve copies of their comments on other commenters.

VII. Document Availability

41. In addition to publishing the full text of this document in the **Federal Register**, the Commission provides all interested persons an opportunity to view and/or print the contents of this document via the Internet through FERC's Home Page (*http://www.ferc.gov*) and in FERC's Public Reference Room during normal business hours (8:30 a.m. to 5 p.m. Eastern time) at 888 First Street, NE., Room 2A, Washington, DC 20426.

42. From FERC's Home Page on the Internet, this information is available on eLibrary. The full text of this document is available on eLibrary in PDF and Microsoft Word format for viewing, printing, and/or downloading. To access this document in eLibrary, type the docket number excluding the last three digits of this document in the docket number field.

43. User assistance is available for eLibrary and the FERC's Web site during normal business hours from FERC Online Support at 202–502–6652 (toll free at 1–866–208–3676) or e-mail at *ferconlinesupport@ferc.gov,* or the Public Reference Room at (202) 502–8371, TTY (202) 502–8659. E-mail the Public Reference Room at *public.referenceroom@ferc.gov.*

List of Subjects in 18 CFR Part 40

Electric power; Reporting and recordkeeping requirements.

By direction of the Commission.

Nathaniel J. Davis, Sr.,

Deputy Secretary.

[FR Doc. 2010–6479 Filed 3–23–10; 8:45 am]

BILLING CODE 6717–01–P

DEPARTMENT OF ENERGY

Federal Energy Regulatory Commission

18 CFR Part 40

[Docket No. RM09–15–000]

Version One Regional Reliability Standard for Resource and Demand Balancing

March 18, 2010.

AGENCY: Federal Energy Regulatory Commission, DOE.

ACTION: Notice of proposed rulemaking.

SUMMARY: Pursuant to section 215 of the Federal Power Act, the Commission proposes to remand a revised regional Reliability Standard developed by the Western Electricity Coordinating Council and approved by the North American Electric Reliability Corporation, which the Commission has certified as the Electric Reliability Organization responsible for developing and enforcing mandatory Reliability Standards. The revised regional Reliability Standard, designated by WECC as BAL–002–WECC–1, would set revised Contingency Reserve requirements meant to maintain scheduled frequency and avoid loss of firm load following transmission or generation contingencies.

DATES: Comments are due May 24, 2010.

ADDRESSES: Comments and reply comments may be filed electronically via the eFiling link on the Commission's Web site at *http://www.ferc.gov.* Documents created electronically using word processing software should be filed in the native application or print-to-PDF format and not in a scanned format. This will enhance document retrieval for both the Commission and the public. The Commission accepts most standard word processing formats and commenters may attach additional files with supporting information in certain other file formats. Attachments that exist only in paper form may be scanned. Commenters filing electronically should not make a paper filing. Service of rulemaking comments is not required. Commenters that are not able to file electronically must send an original and 14 copies of their comments to: Federal Energy Regulatory Commission, Office of the Secretary, 888 First Street, NE., Washington, DC 20426.

FOR FURTHER INFORMATION CONTACT:

Cory Lankford (Legal Information), Office of General Counsel, Federal Energy Regulatory Commission, 888 First Street, NE., Washington, DC 20426, (202) 502–6711.

Nick Henery (Technical Information), Office of Electric Reliability, Federal Energy Regulatory Commission, 888 First Street, NE., Washington, DC 20426, (202) 502–8636.

Scott Sells (Technical Information), Office of Electric Reliability, Federal Energy Regulatory Commission, 888 First Street, NE., Washington, DC 20426, (202) 502–6664.

SUPPLEMENTARY INFORMATION:

Notice of Proposed Rulemaking

March 18, 2010.

1. Pursuant to section 215 of the Federal Power Act (FPA),[1] the Commission proposes to remand a revised regional Reliability Standard developed by the Western Electricity Coordinating Council (WECC) and approved by the North American Electric Reliability Corporation (NERC), which the Commission has certified as the Electric Reliability Organization (ERO) responsible for developing and enforcing mandatory Reliability Standards.[2] The revised regional Reliability Standard, designated by WECC as BAL–002–WECC–1 (Contingency Reserves),[3] is meant to ensure that adequate generating capacity is available at all times to maintain scheduled frequency, and avoid loss of firm load following transmission or generation contingencies. As discussed below, the Commission believes that the proposed regional Reliability Standard does not meet the statutory criteria for

[1] 16 U.S.C. 824o (2006).

[2] *North American Electric Reliability Corp.,* 116 FERC ¶ 61,062, *order on reh'g & compliance,* 117 FERC ¶ 61,126 (2006), *aff'd sub nom. Alcoa, Inc.* v. *FERC,* 564 F.3d 1342 (D.C. Cir. 2009).

[3] NERC designates the version number of a Reliability Standard as the last digit of the Reliability Standard number. Therefore, original Reliability Standards end with "– 0" and modified version one Reliability Standards end with "– 1."

approval that it be just, reasonable, not unduly discriminatory or preferential, and in the public interest.[4]

2. The Commission proposes to remand the proposed regional Reliability Standard based on concerns that it not only fails to support the adoption of less stringent requirements than those in the currently effective WECC regional standard that it would replace, but may also in some respects be less stringent than the corresponding NERC continent-wide Reliability Standard pertaining to contingency reserves. Of particular concern with respect to whether the proposed standard is less stringent than the continent-wide Reliability Standard is the provision of proposed BAL–002–WECC–1 that would permit a balancing authority, when an emergency is declared, to count "Load, other than Interruptible Load" as contingency reserve. This provision allows a balancing authority to activate load shedding when a single contingency occurs instead of procuring and utilizing generating or demand response resources held in reserve for contingencies to balance the Bulk-Power System. We believe that such operation, which is not permitted in either the current regional Reliability Standard or the NERC continent-wide Reliability Standard, is detrimental to reliability.

3. Further, we are concerned that proposed BAL–002–WECC–1, Requirement R1, reformulates the minimum contingency reserve requirement without providing adequate support that the new requirement is sufficiently stringent to meet the requirements of NERC's continent-wide Disturbance Control Standard, BAL–002–0. While NERC in its transmittal letter provides several justifications for the proposed modification to the minimum contingency reserve requirement, it also states that WECC relied on just eight hours of operating data in its analysis to support its proposal to make a modest reduction in the amount of contingency reserve under the proposed Reliability Standard. We believe that NERC and WECC should provide additional data and analysis to support the proposed reformulation. Accordingly, we propose to remand WECC regional Reliability Standard BAL–002–WECC–1.

I. Background

A. Mandatory Reliability Standards

4. Section 215 of the FPA requires a Commission-certified ERO to develop mandatory and enforceable Reliability Standards, which are subject to Commission review and approval. Once approved, the Reliability Standards may be enforced by the ERO, subject to Commission oversight, or by the Commission independently.[5]

5. Reliability Standards that the ERO proposes to the Commission may include Reliability Standards that are proposed to the ERO by a Regional Entity.[6] A Regional Entity is an entity that has been approved by the Commission to enforce Reliability Standards under delegated authority from the ERO.[7] When the ERO reviews a regional Reliability Standard that would be applicable on an interconnection-wide basis and that has been proposed by a Regional Entity organized on an interconnection-wide basis, the ERO must rebuttably presume that the regional Reliability Standard is just, reasonable, not unduly discriminatory or preferential, and in the public interest.[8] In turn, the Commission must give "due weight" to the technical expertise of the ERO and of a Regional Entity organized on an interconnection-wide basis.[9]

6. In Order No. 672, the Commission urged uniformity of Reliability Standards, but recognized a potential need for regional differences.[10] Accordingly, the Commission stated that:

> As a general matter, we will accept the following two types of regional differences, provided they are otherwise just, reasonable, not unduly discriminatory or preferential and in the public interest, as required under the statute: (1) A regional difference that is more stringent than the continent-wide Reliability Standard, including a regional difference that addresses matters that the continent-wide Reliability Standard does not; and (2) a regional Reliability Standard that is necessitated by a physical difference in the Bulk-Power System.[11]

B. Western Electricity Coordinating Council

7. On April 19, 2007, the Commission accepted delegation agreements between NERC and each of eight Regional Entities.[12] In its order, the Commission accepted WECC as a Regional Entity organized on an Interconnection-wide basis. As a Regional Entity, WECC oversees transmission system reliability in the Western Interconnection. The WECC region encompasses nearly 1.8 million square miles, including 14 western U.S. states, the Canadian provinces of Alberta and British Columbia, and the northern portion of Baja California in Mexico.

8. In June 2007, the Commission approved eight regional Reliability Standards for WECC including the currently effective regional Reliability Standard for operating reserves, WECC–BAL–STD–002–0.[13] The Commission found that the current regional Reliability Standard was more stringent than the corresponding NERC Reliability Standard, BAL–002–0, since WECC required a more stringent minimum reserve requirement than the continent-wide requirement.[14] Moreover, the Commission found that WECC's requirement to restore contingency reserves within 60 minutes was more stringent than the 90 minute restoration period as set forth in NERC's BAL–002–0.[15]

9. The Commission directed WECC to develop certain minor modifications to WECC–BAL–STD–002–0, as identified by NERC in its filing letter for the current standard.[16] For example, the Commission determined that: (1) Regional definitions should conform to definitions set forth in the NERC Glossary of Terms Used in Reliability Standards (NERC Glossary), unless a specific deviation has been justified; and, (2) documents that are referenced in the Reliability Standard should be attached to the Reliability Standard. The Commission also found that it is important that regional Reliability Standards and NERC Reliability Standards achieve a reasonable level of consistency in their structure so that there is a common understanding of the elements. The Commission also directed WECC to address stakeholder concerns regarding ambiguities in the terms "load responsibility" and "firm transaction."[17]

II. WECC Regional Reliability Standard BAL–002–WECC–1

10. On March 25, 2009, NERC submitted a petition (NERC Petition) to the Commission seeking approval of

[4] 16 U.S.C. 824o(d)(2).

[5] 16 U.S.C. 824o(e)(3).

[6] 16 U.S.C. 824o(e)(4).

[7] 16 U.S.C. 824o(a)(7) and (e)(4).

[8] 18 CFR 39.5 (2009).

[9] 16 U.S.C. 824o(d)(2).

[10] *Rules Concerning Certification of the Electric Reliability Organization; Procedures for the Establishment, Approval, and Enforcement of Electric Reliability Standards,* Order No. 672, 71 FR 8662 (Feb. 17, 2006), FERC Stats. & Regs. ¶ 31,204, at P 290 (2006); *order on reh'g,* Order No. 672–A, 71 FR 19814 (Apr. 18, 2006), FERC Stats. & Regs. ¶ 31,212 (2006).

[11] *Id.* P 291.

[12] *North American Electric Reliability Corp.,* 119 FERC ¶ 61,060, at P 432 (2007).

[13] *North American Electric Reliability Corp.,* 119 FERC ¶ 61,260, at P 53 (2007).

[14] *Id.*

[15] *Id.*

[16] *Id.* P 55.

[17] *Id.* P 56.

BAL–002–WECC–1 [18] and requesting the concurrent retirement of BAL–STD–002–0.[19] In that March petition, NERC states that the proposed regional Reliability Standard was approved by the NERC Board of Trustees at its October 29, 2008 meeting. NERC also requests an effective date for the proposed regional Reliability Standard of 90 calendar days after receipt of applicable regulatory approval.

11. The proposed regional Reliability Standard contains three main provisions. Requirement R1 provides that each reserve sharing group [20] or balancing authority must maintain a minimum contingency reserve that is the greater of (1) an amount of reserve equal to the loss of the most severe single contingency; or (2) an amount of reserve equal to the sum of three percent of the load and three percent of net generation. Requirement R2 states that each reserve sharing group or balancing authority must maintain at least half of the contingency reserve as spinning reserve. Requirement R3 identifies acceptable types of reserve to satisfy Requirement R1:

R3.1. Spinning Reserve;
R3.2. Interruptible Load;
R3.3. Interchange Transactions designated by the source Balancing Authority as non-spinning contingency reserve;
R3.4. Reserve held by the other entities by agreement that is deliverable on Firm Transmission Service;
R3.5. An amount of off-line generation which can be synchronized and generating; or
R.3.6. Load, other than Interruptible Load, once the Reliability Coordinator has declared a capacity or energy emergency.

In addition, Measure M1 provides that a reserve sharing group or balancing authority must have documentation that it maintained 100 percent of required contingency reserve levels "except within the first 105 minutes (15 minute Disturbance Recovery Period, plus 90 minute Contingency Reserve Restoration Period) following an event requiring the activation of Contingency Reserves."

III. Discussion

12. As discussed below, proposed regional Reliability Standard BAL–002–WECC–1 does not appear to satisfy the statutory criteria for approval. The Commission therefore proposes to remand BAL–002–WECC–1 to the Regional Entity with instructions for development of suitable modifications. The Commission also discusses additional concerns with the proposed regional Reliability Standard, and proposes that the Regional Entity address these concerns on remand.

A. Calculation of Minimum Contingency Reserves

13. NERC's Disturbance Control Standard, continent-wide Reliability Standard BAL–002–0, requires each balancing authority or reserve sharing group, at a minimum, to maintain at least enough contingency reserve to cover the most severe single contingency. Similarly, requirement WR1(a)(ii) of WECC's current WECC–BAL–STD–002–0 requires balancing authorities to maintain a contingency reserve of spinning and nonspinning reserves (at least half of which must be spinning), sufficient to meet the NERC Disturbance Control Standard, BAL–002–0, equal to the greater of: (1) the loss of generating capacity due to forced outages of generation or transmission equipment that would result from the most severe single contingency; or (2) the sum of five percent of load responsibility served by hydro generation and seven percent of the load responsibility served by thermal generation. In approving the regional BAL–STD–002–0 Reliability Standard, the Commission noted that the regional Reliability Standard is more stringent than the NERC Reliability Standard, BAL–002–0, because WECC requires a more stringent minimum reserve requirement than the continent-wide requirement.

WECC and NERC Proposal

14. As proposed, Requirement R1 of BAL–002–WECC–1 would require each reserve sharing group or balancing authority that is not a member of a reserve sharing group to maintain a minimum contingency reserve. NERC contends that the proposed minimum contingency reserve amount is more stringent than that required by the continent-wide Reliability Standard.[21] NERC explains that, whereas Requirement R3.1 of BAL–002–0 requires that each balancing authority or reserve sharing group carry, at a minimum, at least enough contingency reserve to cover the most severe single contingency, proposed Requirement R1.1 of BAL–002–WECC–1 requires that each balancing authority or reserve sharing group maintain, as a minimum, contingency reserves equal to the loss of the most severe single contingency or an amount of reserve equal to the sum of three percent of the load (generation minus station service minus net actual interchange) and three percent of net generation (generation minus station service).[22]

15. NERC states that the proposed requirements for minimum contingency reserves provide a comparable level of contingency reserves to those contained in the currently approved regional Reliability Standard. NERC explains that, based on operational experience, the requirements have been revised to remove what it considers to be ambiguous terms, such as "load responsibility," and separate market transactions from the determination of required reserves that exist using the methodology in the current Reliability Standard.[23] In support of the revised minimum contingency reserve calculations, NERC states that, based on technical studies covering a total eight hours from the four operating seasons (summer, fall, winter and spring, both on and off-peak), the drafting team determined that the sum of 3 percent of load and 3 percent of net generation level was appropriate to approximate the same level of contingency reserves as the existing approved standard provides throughout the year.

16. NERC contends, however, that, due to ambiguities that exist using the current methodology, historical information necessary to calculate the required contingency reserve levels under the proposed methodology is not readily available from collected data. NERC explains that this situation exists because the calculations are based on the term "load responsibility" as it is used in the current regional Reliability Standard and not on load itself. Thus, NERC comments, WECC does not have additional data available in order to compare the contingency reserve levels required under the existing methodology with the prospective reserve levels under the proposed methodology. NERC states that requiring an additional survey of the applicable entities would place an undue burden on those entities to compile and submit the data, and on the drafting team to evaluate and verify the data, considering the amount of time that has passed since the proposed regional Reliability Standard was approved by the WECC Board of Directors.

[18] *See* 18 CFR 39.5(a) (requiring the ERO to submit regional Reliability Standards on behalf of a Regional Entity).

[19] The proposed regional Reliability Standard is not attached to the NOPR. It is, however, available on the Commission's eLibrary document retrieval system in Docket No. RM09–15–000 and is on the ERO's Web site, *available at: http://www.nerc.com.*

[20] A "reserve sharing group" is a group whose members consist of two or more balancing authorities that collectively maintain, allocate, and supply operating reserves required for each balancing authority's use in recovering from contingencies within the group. *See* NERC Glossary, *available at: http://www.nerc.com/docs/standards/rs/Glossary_2009April20.pdf.*

[21] NERC Petition at 9.

[22] *Id.* at 14.

[23] *Id.* at 16.

17. NERC acknowledges that even the data collected illustrates that the proposed methodology for calculating minimum contingency reserves results in a slight reduction in required total reserves in the interconnection for each of the eight hours assessed as compared to the total reserves required under the current methodology.[24] In fact, the eight hours of data shows an overall decrease in required reserves under the proposed methodology of approximately 350 MWs (from approximately 10,850 MWs to 10,500 MWs) on high load days. NERC argues, however, that, under the currently effective regional Reliability Standard, the potential exists for the total reserves required in the Western Interconnection to be reduced if firm transactions are purchased from balancing authorities or from reserve sharing groups whose reserve requirements are determined by the most severe single contingency.[25]

18. NERC also contends that industry will benefit from the improved clarity in the proposed regional Reliability Standard.[26] NERC states that the ambiguity associated with the term "load responsibility," as it is used in the current regional Reliability Standard, results in confusion regarding the location and amount of the reserves being carried in the interconnection. NERC explains that:

[t]he identification of the entities responsible for providing reserves may be lost as purchases are bundled and remarketed. With regard to the ability to audit applicable entities for compliance to the existing BAL–STD–002–0 relative to the proposed BAL–002–WECC–1 standard, WECC has been able to audit the current standard with a reasonable level of consistency; however, the industry would benefit from greater clarity. The interpretation of the term "load responsibility," which is used to determine the amount of reserves required has been problematic for WECC, particularly because FERC Order No. 888 expanded the types of commercial products traded in the electric power industry. The influence of routine commercial transactions and terms in the existing regional Reliability Standard has introduced the possibility of varying interpretations for the term "load responsibility" and a degree of uncertainty as to the responsibility for reserves, resulting in challenges when evaluating compliance.[27]

19. In addition, NERC states that the existing regional Reliability Standard considers load served by hydro and thermal generation but does not explicitly require contingency reserves for other types of generation such as wind, solar or other renewable resources. NERC concludes that the proposed regional Reliability Standard adds clarity by explicitly requiring reserves for renewable resources.[28] NERC argues further that even though the use of the proposed method for calculating minimum contingency reserves results in a reduction in total reserves required in the interconnection, such impact is negligible when compared to the uncertainty in the actual amount of reserves being carried in the interconnection under the existing regional Reliability Standard and the potential shortfall in reserves existing as a result of new technologies not currently addressed in the existing regional Reliability Standard.

NOPR Proposal

20. The Commission proposes to find that the eight hours of data provided by WECC is insufficient to demonstrate that the proposed minimum contingency reserve requirements are sufficiently stringent to ensure that entities within the Western Interconnection will meet the requirements of NERC's continent-wide Disturbance Control Standard, BAL–002–0. In the regional Reliability Standard development process, several commenters raised similar concerns about the lack of technical justification for the proposed method for calculating minimum contingency reserve levels.[29] The Commission believes that NERC did not adequately respond to these concerns.

21. In its March 2007 petition proposing the currently effective regional Reliability Standard, NERC explained that WECC–BAL–STD–002–0 and the other seven regional Reliability Standards were WECC's translation of existing WECC criteria that the WECC Operating Committee and Western Interconnection Regional Advisory Body both concluded to be critical to maintaining reliability within the Western Interconnection.[30] NERC stated that all of these regional Reliability Standards were "well vetted, approved, tested, and proven effective in monitoring and enforcing critical reliability elements in the Western Interconnection"[31] and were developed in response to the 1996 blackouts. NERC also stated that, in developing WECC–BAL–STD–002–0 and the other seven regional Reliability Standards, the "WECC Operating Committee undertook a comprehensive review of all WECC criteria, policies, and guidelines in an effort to identify all unique * * * criteria it believed critical to the reliability of the Western Interconnection"[32] and concluded that these eight regional Reliability Standards were of the "highest priority."[33] These statements indicate that these eight regional Reliability Standards were necessary to maintain reliability in the Western Interconnection. Our review of the provisions relating to the calculation of minimum contingency reserve requirements in the proposed Reliability Standard indicates that they may be less stringent than the currently-effective regional Reliability Standard, WECC–BAL–STD–002–0, and may also be less stringent than the currently-effective continent-wide Reliability Standard. NERC and WECC have not provided an adequate explanation or supporting studies to resolve these concerns.

22. NERC admits that the eight hours of data illustrates that the proposed methodology for calculating contingency reserves results in a reduction of total reserves required in the Western Interconnection for each of the eight hours assessed when compared with the methodology in the current regional Reliability Standard. Neither NERC nor WECC has provided sufficient evidence that the proposed regional Reliability Standard provides adequate requirements to ensure that entities within WECC will continue to satisfy the continent-wide disturbance control standard and will not cause frequency-related instability, uncontrolled separation or cascading outages. Moreover, the evidence provided is insufficient to demonstrate that the proposed regional Reliability Standard is more stringent than the

[24] *Id.* at 15.

[25] *Id.*

[26] *Id.* at 15–16. In its order approving the current regional Reliability Standard, the Commission directed WECC, in preparing a revised regional Reliability Standard, to resolve concerns raised by stakeholders that certain terms, including "load responsibility," were ambiguous. *North American Electric Reliability Corp.,* 119 FERC ¶ 61,260 at P 56.

[27] NERC Petition at 16.

[28] *NERC Petition* at 16.

[29] *See, e.g.,* NERC, Petition at Exhibit C (Record of Development of Proposed Reliability Standard), Avista, October 30, 2007 Comments at 21; Alberta Electric System Operator, October 30, 2007 Comments at 23; Bonneville Power Administration, October 30, 2007 Comments at 28; Grant County PUD, October 30, 2007 Comments at 16–17; PacifiCorp Commercial and Trading, October 30, 2007 Comments at 33–34; NorthWestern Energy, October 30, 2007 Comments at 36; Northwest Power Pool Reserve Sharing Group, October 30, 2007 Comments at 8; PacifiCorp, October 30, 2007 Comments at 34; Pacific Gas & Electric, January 2, 2008 Comments at 4; Portland General Electric Merchant, October 30, 2007 Comments at 25.

[30] NERC, March 26, 2007 Petition Proposing Current Regional Reliability Standard, Docket No. RR07–11–000, at 4.

[31] *Id.*

[32] *Id.*

[33] *Id.*

corresponding NERC Reliability Standard.

23. Although the proposed Reliability Standard offers some added clarity by eliminating reference to the term "load responsibility" and including renewables in the calculation of contingency reserves, the Commission proposes to find that NERC and WECC have not provided sufficient technical justification to support the proposed revised method for calculating contingency reserves. Thus, we propose to remand BAL–002–WECC–1 so that WECC can develop additional support and make modifications as appropriate for a future proposal, consistent with the above discussion. In preparing its response, NERC could provide a variety of technical justifications. For example, NERC could provide statistically significant data, supported by a sampling representative of all balancing authorities and expected operating conditions (such as each season, peak periods, off-peak periods and reportable disturbances), to cover the range of operating conditions that must be addressed to ensure that the proposed amount of contingency reserve that are on-line and deliverable will exceed the performance under the NERC Reliability Standards, taking into account the specific electrical characteristics and topology of the Western Interconnection. Alternatively, NERC could provide model simulations demonstrating that the proposed amount of contingency reserves are on-line and deliverable for all expected operating conditions and will exceed the performance required under the NERC Reliability Standards, taking into account the specific electrical characteristics and topology of the Western Interconnection.

24. The Commission recognizes that NERC has suggested that confusion exists with regard to the term "load responsibility." However, the Commission believes that any confusion concerning the term "load responsibility" has been addressed by WECC and therefore does not have a reliability impact. WECC has defined the term "load responsibility", although not in its regional Reliability Standard.[34] Under WECC's definition for "load responsibility", a balancing authority's "load responsibility", for maintaining adequate contingency reserves, is determined by a balancing authority's firm load (net generation minus net actual interchange); minus loads contractually interruptible within 10 minutes; minus imports where the source balancing authority is responsible for contingency reserves; plus exports where the exporting balancing authority is responsible for contingency reserves. WECC's procedures for load responsibility require that the entities (purchasing selling entity or load serving entity) that are party to the import or export are required to identify the transaction to the balancing authority using the e-tagging prescheduling tool and identify the associated contingency reserves.

B. Use of Firm Load To Meet Contingency Reserve Requirement

25. Requirement R1 of NERC's continent-wide Reliability Standard BAL–002–0, allows balancing authorities to supply their contingency reserves from generation, controllable load resources, or coordinated adjustments to interchange schedules.[35] Similarly, WECC's current WECC–BAL–STD–002–0 identifies acceptable types of non-spinning reserve and, among those identified, "interruptible load."[36]

WECC Proposal

26. Requirement R3 of BAL–002–WECC–1 requires that each reserve sharing group or balancing authority use certain types of reserves that must be fully deployable within ten minutes of notification to meet their contingency reserve requirement. Requirement R3.2 allows these entities to count "Interruptible Load" as contingency reserves.[37] In addition, Requirement R3.6 allows entities to use "Load, other than Interruptible Load, once the Reliability Coordinator has declared a capacity or energy emergency."[38]

27. NERC contends that the changes made by the proposed regional Reliability Standard related to the treatment of firm load have reduced the number of occasions when an entity may use firm load as contingency reserves.[39] NERC explains that, under the proposed regional Reliability Standard, balancing authorities or reserve sharing groups may only use firm load as contingency reserves once the reliability coordinator has declared a capacity or energy emergency. NERC also states that the proposed regional Reliability Standard continues to require that reserves must be deliverable to be included in the minimum calculations of contingency reserves.

NOPR Proposal

28. The Commission does not agree with NERC that the proposed regional Reliability Standard reduces the occasions when an entity may use firm load as contingency reserves. The Commission proposes to find that Requirement R3.6 is not technically sound because it permits balancing authorities and reserve sharing groups within WECC to use firm load to meet their minimum contingency reserve requirement "once the Reliability Coordinator has declared a capacity or energy emergency," thus creating the possibility that firm load could be shed due to the loss of a single element on the system.[40]

29. Although NERC states in its petition that the proposed regional Reliability Standard "reduce[s] the number of occasions when an entity may use firm load as contingency reserves," the currently effective regional Reliability Standard does not allow the use of firm load to meet minimum contingency reserve levels. In fact, the current regional Reliability Standard does not mention "firm load" as an acceptable type of reserve.

30. In the 2007 proceeding in which the Commission approved the currently effective WECC–BAL–STD–002–0, one commenter argued that the definition of "interruptible" is unclear and that firm transactions are potentially curtailable and thus interruptible under a "very narrow interpretation."[41] The Commission rejected the protest on this issue stating that "the meaning of the term 'interruptible' is generally well understood in the industry, *i.e.,* transmission or generation subject to interruption at the provider's discretion."[42] Thus, if entities within

[34] WECC's interpretation of "Load Responsibility," which was approved by the WECC Board of Directors September 7, 2007, places the responsibility on the balancing authorities to determine the amount of and assure that adequate contingency reserves are provided. *See* WECC Interpretation of Load Responsibility (Sept. 7, 2007), *available at: http://www.wecc.biz/Standards/Interpretations/Interpretation%20of%20Load%20Responsibility.pdf.* Likewise, the current regional Reliability Standard places the responsibility on the balancing authorities to determine the amount of and assure that adequate contingency reserves are provided.

[35] Reliability Standard BAL–002–0, Requirement R1.

[36] WECC–BAL–STD–002–0, Requirement WR1(b).

[37] BAL–002–WECC–1, Requirement R3.2.

[38] BAL–002–WECC–1, Requirement R3.6.

[39] NERC Petition at 19.

[40] Order No. 672, FERC Stats. & Regs. ¶ 31,204, at P 324 (identifying guidelines for what constitutes a just and reasonable Reliability Standard including the "proposed Reliability Standard must be designed to achieve a specified reliability goal and must contain a technically sound means to achieve this goal").

[41] *North American Electric Reliability Corp.,* 119 FERC ¶ 61,260 at P 50.

[42] *Id.* P 59. The NERC Glossary defines Interruptible Load as interruptible demand or the demand that the end-use customer makes available to its load-serving entity via contract or agreement for curtailment. *See* NERC Glossary, *available at: http://www.nerc.com/docs/standards/rs/Glossary_2009April20.pdf.*

WECC have interpreted the term "interruptible load" to include firm load, this is a mistake.

31. The Commission does not support a regional practice by balancing authorities or reserve sharing groups to count firm load towards their minimum contingency reserve requirements. Neither the corresponding NERC continent-wide Reliability Standard, BAL–002–0, nor the currently effective WECC regional Reliability Standard permit a balancing authority to consider firm load when satisfying minimum contingency reserve requirements. Accordingly, the Commission proposes to find that the proposed regional Reliability Standard is less stringent than the continent-wide Reliability Standard because it would allow entities to count firm load towards their minimum contingency reserve requirements.

32. Moreover, we are concerned that the provision of the proposed WECC regional Reliability Standard that would allow a balancing authority to include firm load as contingency reserve when an emergency is declared is inappropriate because there are provisions of NERC continent-wide Reliability Standards that specifically address the actions entities must take in emergency situations. The proposed WECC regional Reliability Standard appears to be incongruent with these other provisions. Specifically, the requirements of Reliability Standard EOP–002–2.1 ensure that entities are prepared to handle capacity and energy emergency situations, and include minimum remedies required for mitigating capacity and energy emergencies to meet the Disturbance Control Standard and resolve the emergency conditions. Attachment 1 of EOP–002–2.1, Energy Emergency Alerts, describes three emergency alert levels, in order of severity. A reliability coordinator (either by its own initiative or at the request of a balancing authority or load serving entity) may initiate a level one energy emergency alert if a load-serving entity is, or expects to be, unable to provide customers' energy requirements or the load-serving entity cannot schedule resources due to, for example, available transfer capability or transmission loading relief limitations.[43] A level two alert is more severe, addressing situations when an entity can no longer provide its customers' energy requirements. A level three alert is called when a firm load interruption is imminent or in progress.

33. As mentioned above, Requirement R3.6 of proposed BAL–002–WECC–1, would allow an entity to include firm load to satisfy contingency reserve requirements once the reliability coordinator "has declared a capacity or energy emergency" and applies when any level alert is initiated without qualification. This is of concern to the Commission because, if an entity initiated energy emergency alert level 1, under BAL–002–WECC–1, that entity could count firm load as contingency reserve instead of taking other actions to remedy the situation as set forth in NERC Reliability Standard EOP–002–2.1 (e.g., public appeals, voltage reduction, firm or non-firm imports, emergency assistance from neighboring entities, and demand-side management). This practice is not allowed under the corresponding continent-wide Reliability Standard, BAL–002–0. Since the proposed regional Reliability Standard includes requirements that are less stringent than BAL–002–0, the Commission proposes to remand BAL–002–WECC–1 and direct WECC to modify the regional Reliability Standard to ensure consistency with the continent-wide Reliability Standards.

C. Contingency Reserve Restoration Period

34. NERC Reliability Standard BAL–002–0 provides that a balancing authority or reserve sharing group responding to a disturbance must fully restore its contingency reserves within 90 minutes following the disturbance recovery period, which is set at 15 minutes.[44] Thus, under BAL–002–0, if there is a disturbance, a balancing authority or reserve sharing group has 105 minutes to fully restore its contingency reserves. The current WECC regional BAL Reliability Standard requires reserve sharing groups and balancing authorities to maintain 100 percent of required operating reserve levels except within the first 60 minutes following an event requiring the activation of operating reserves.[45] Thus, currently, applicable entities in WECC have 60 minutes to restore their operating reserves to 100 percent. In the March 2007 petition asking the Commission to approve the currently effective WECC–BAL–STD–002–0, NERC explained that the increased stringency was meant to address concerns arising out of the 1996 blackouts in California and that, according to WECC, the regional requirements were critical to the reliability of the Western Interconnection.[46]

35. In approving WECC–BAL–STD–002–0, the Commission found that WECC's requirement to restore contingency reserves within 60 minutes was more stringent than the 90 minute restoration period set forth in NERC's BAL–002–0.[47]

WECC Proposal

36. WECC proposes to replace the current 60 minute restoration period requirement with a new provision that would require the restoration of contingency reserves within 90 minutes from the end of the disturbance recovery period (15 minutes). NERC states that the 60 minute restoration period required by the current regional Reliability Standard was developed and used under a manual interchange transaction structure among vertically integrated utilities. NERC states that, due to a substantial increase in the number of market participants and interchange transactions in the Western Interconnection, entities within the Western Interconnection have implemented an electronic tagging system (e-tagging). NERC states that the adoption of the e-tagging system accommodates multiple market participants and the corresponding increased number of interchange transactions makes the current mid-hour reserve restoration period more cumbersome and makes the inappropriate rejection of reserve restoration transactions more likely because such transactions are outside the e-tagging cycle. Thus, NERC contends that eliminating the 60 minute reserve restoration requirement and adopting the proposed new requirements, which provide the same reserve restoration period as NERC's BAL–002–0, results in more efficient communication among balancing authorities because it aligns the restoration of contingency reserves with the e-tagging system approval cycle.

NOPR Proposal

37. The Commission proposes to remand the regional Reliability Standard BAL–002–WECC–1 based on the lack of any technical justification or analysis of the potential increased risk

[43] An energy emergency level 1 can be declared either if an entity foresees or is experiencing in real-time, conditions where all available resources are committed to firm load, firm transactions, and reserve commitments are being met, but the entity is concerned about sustaining its required operating reserve. Reliability Standard EOP–002–2.1, Attachment 1.

[44] Reliability Standard BAL–002–0, Requirements R4 and R6.

[45] WECC regional Reliability Standard WECC–BAL–STD–002–0, Measure of Compliance WM1.

[46] NERC, March 26, 2007 Petition Proposing Current Regional Reliability Standard, Docket No. RR07–11–000, at 5.

[47] *North American Electric Reliability Corp.,* 119 FERC ¶ 61,260 at P 53.

to the Western Interconnection resulting from the increase in the contingency reserve restoration period. Without sufficient data, the Commission is unable to determine whether the increase in contingency reserve restoration period is sufficient to maintain the reliable operation of the Bulk-Power System in the Western Interconnection. A requirement to restore contingency reserves following a disturbance improves reliability by ensuring an entity will be in position to respond to the next disturbance, thus preventing adverse reliability impacts. When a contingency has occurred and operating reserves, generation or interruptible load, have been deployed, the system typically has insufficient reserves to respond to another contingency until such reserves are replenished. During this time, the system is in a vulnerable position, an emergency state, in which the next contingency could lead to cascading outages. Exposure in such a state should be limited to the extent possible. The Commission notes that in the Western Interconnection a significant number of transmission paths are voltage or frequency stability limited, in contrast to other regions of the Bulk-Power System where transmission paths more often are thermally limited. Disturbances that result in a "stability limited" transmission path overload, generally, must be responded to in a shorter time frame than a disturbance that results in a "thermally limited" transmission path overload. The Commission understands that this physical difference is one of the reasons for the need for certain provisions of regional Reliability Standards in the Western Interconnection.

38. Proposed BAL–002–WECC–1 does not include a requirement that an entity restore either contingency reserves or operating reserves. Instead, proposed compliance measure M1 provides that an entity should have documentation to prove it maintained the required contingency reserve level except during the 105 minutes following a disturbance, which represents a 45 minute increase over the current requirement. As an initial matter, a Reliability Standard should set forth substantive compliance obligations in the "Requirements" section of the Reliability Standard, and not in the "Compliance Measures" section. Moreover, we believe that there is no need for a provision of regional Reliability Standard that simply restates the requirement of a corresponding continent-wide Reliability Standard. This is unnecessary, duplicative, and potentially confusing if the regional Reliability Standard is intended to create the same obligation as the continent-wide Reliability Standard. Instead, the regional Reliability Standard should remain silent with regard to any such requirements, and possibly cross-reference the corresponding continent-wide Reliability Standard as appropriate.

39. The only justification offered by NERC for the extension of the reserve restoration period to match the continent-wide Reliability Standard is the adoption of the e-tagging system by entities in the Western Interconnection. The e-tagging system is an efficient tool used for day-ahead and hour-ahead market accounting and as input for day-ahead and hour-ahead transfer capability analysis of scheduled interchange transactions and development of day-ahead and hour-ahead capacity and energy resource schedules. Proposing to adapt reliability requirements to resolve problems extending from software to the extent it is intended to better enable economic transactions is not a technical justification since it does not address any change in the need for the reliability requirement. Extending the contingency reserve restoration period from 60 minutes to 105 minutes increases exposure to unstable operating conditions. Although adoption of the e-tagging system may result in more efficient communication among transmission operators and balancing authorities for day-ahead and hour-ahead scheduling, this fact alone does not appear sufficient to justify the extension of the reserve restoration period.

40. Although NERC BAL–002–0 provides for a 90-minute contingency restoration period, WECC explained in 2007 that it needed a shortened contingency restoration period to ensure the reliability of the Bulk-Power System in the Western Interconnection. In its March 2007 petition for approval of the currently effective WECC regional Reliability Standard, NERC presented arguments from WECC that its experience in the 1996 blackouts led to an analysis of essential criteria to ensure the reliability of the Bulk-Power System in the Western Interconnection and, as a result, WECC developed more stringent requirements as it relates to this issue for the region.[48] The proposal in the immediate proceeding, however, offers marketing or administrative reasons for increasing the contingency reserve restoration period. NERC does not provide a technical justification regarding how this proposed modification adequately ensures the reliability of the Bulk-Power System in the Western Interconnection. We encourage Regional Entities periodically to reevaluate their need for regional Reliability Standards. However, when a Regional Entity proposes to modify a regional Reliability Standard it previously claimed was necessary to maintain reliability in that region by adopting less stringent requirements, the Regional Entity must demonstrate that the modified requirements are sufficient to maintain reliability in the region.

41. It appears to the Commission that the proposed modification set forth in Measure M1 may weaken the reliability of the Bulk-Power System in the Western Interconnection. Accordingly, the Commission proposes to remand BAL–002–WECC–1 and to direct WECC to either: (1) Retain the current 60-minute rule; or (2) provide technical justification and supporting data demonstrating how WECC will maintain adequate reliability with the proposed 105-minute reserve restoration period. The regional entity could provide a variety of technical justifications to support this modification. For example, WECC could perform a statistically significant analysis of the level of risk associated with the conditions using the 60-minute reserve restoration period as compared to the projected level of risk associated with the proposed 90-minute restoration period. The analysis must demonstrate that the proposed revisions do not expose entities within the Western Interconnection to a level of risk that is greater than the level of risk accepted by entities operating under the requirements of the continent-wide NERC Reliability Standard, taking into account the specific electrical characteristics and topology of the Western Interconnection. Alternatively, WECC could perform model simulations, representative of all operating conditions, showing how the system would deploy contingency reserves after a first contingency (n-1) and, prior to restoration of the reserves, apply a second contingency (n-1-1) to determine if the system will stabilize. Based on comments made by the Reliability Standards drafting team, submitted as part of the development record in Exhibit C to the NERC petition, the Commission believes that NERC should be able to provide this

[48] NERC, March 26, 2007 Petition Proposing Current Regional Reliability Standard, Docket No. RR07–11–000, at 4–5.

information without any undue burden.[49]

D. Including Demand-Side Management as a Resource

42. In Order No. 693, the Commission directed the ERO to submit a modification to continent-wide Reliability Standard BAL–002–0 that includes a Requirement that explicitly allows that demand-side management be used as a resource for contingency reserves, and clarifies that demand-side management should be treated on a comparable basis and must meet similar technical requirements as other resources providing this service.[50] The Commission directed the ERO to list the types of resources that can be used to meet contingency reserves to provide users, owners and operators of the Bulk-Power System a set of options to meet contingency reserves.[51] The Commission clarified that the purpose of this directive was to ensure comparable treatment of demand-side management with conventional generation or any other technology and to allow demand-side management to be considered as a resource for contingency reserves on this basis without requiring the use of any particular contingency reserve option.[52] The Commission further clarified that in order for demand-side management to participate, it must be technically capable of providing contingency reserve service, with the ERO determining the technical requirements.[53]

1. BAL–002–WECC–1

WECC Proposal

43. The proposed regional Reliability Standard does not explicitly address the use of demand side management as a resource for contingency reserves. NERC states that it raised this concern with WECC, and WECC responded that the drafting team wrote the regional Reliability Standard "to permit load, Demand-Side Management, generation, or another resource technology that qualifies as Spinning Reserve or Contingency Reserve to be used as such." WECC further explained that demand-side management that is deployable within ten minutes is a subset of interruptible load, which is an acceptable type of reserve set forth in proposed Requirement R3.2.[54]

NOPR Proposal

44. While WECC indicates that the phrase "interruptible load" is intended to include demand-side management as contingency reserve, we believe that the regional Reliability Standard should state this explicitly, consistent with Order No. 693. Accordingly, pursuant to section 215(d)(5) of the FPA, we propose to direct WECC to develop a modification to BAL–002–WECC–1 that explicitly provides that demand-side management, that is technically capable of providing this service, may be used as a resource for contingency reserves. Consistent with the Commission's directive in Order No. 693, the modification should list the types of resources, including demand-side management, which can be used to meet contingency reserves. The modification should also ensure comparable treatment of demand-side management with conventional generation or any other technology and allow demand-side management to be considered as a resource for contingency reserves on this basis without requiring the use of any particular contingency reserve option.

45. In addition, there appears to be a conflict related to the definition of Spinning Reserve as it is used in the proposed regional Reliability Standard. Requirement R3.1 provides that Spinning Reserves may be used to meet the minimum contingency reserve requirement. The NERC Glossary defines Spinning Reserves as "[u]nloaded generation that is synchronized and ready to serve additional demand." This definition omits the use of demand-side management or other technologies that could be used as a resource because it limits acceptable Spinning Reserve resources to generation resources. An alternative definition of spinning reserves exists in the NERC Glossary as Operating Reserve—Spinning, which includes as part of the definition of Operating Reserve, "load fully removable from the system within the Disturbance Recovery Period following the contingency event." Thus, this second definition would capture the use of demand-side management as a resource in the calculation of spinning reserve because it allows entities to include reductions in load as spinning reserve resources. Furthermore, the definition of Operating Reserve-Spinning is consistent with our instruction on the continent-wide Reliability Standard as discussed in Order No. 693.[55] Accordingly, we propose to direct the Regional Entity to develop a modification to the regional Reliability Standard that references this broader definition of spinning reserve to include demand-side management.

2. NERC Glossary

46. As discussed above, the NERC Glossary offers two definitions of spinning reserve: Spinning Reserve and Operating Reserve-Spinning. The definition of Spinning Reserve does not include demand-side management as a resource, whereas the definition of Operating Reserve-Spinning does. Considering that the term Spinning Reserve is not used in any approved Reliability Standard other than the current regional Reliability Standard, WECC–BAL–STD–002–0, the Commission proposes to direct NERC to remove this term from the NERC Glossary upon retirement of the current regional Reliability Standard.

47. Although the definitions of Operating Reserve-Spinning and Operating Reserve-Supplemental both include "[l]oad fully removable from the system within the Disturbance Recovery Period following the contingency event," which is broad enough to include demand-side management, demand-side management should still be explicitly included. Consistent with Order No. 693, the proposed directive to remove the term Spinning Reserve from the NERC Glossary would promote comparable treatment of demand-side management with conventional generation or any other technology and to allow demand-side management to be considered as a resource for operating reserves on this basis without requiring the use of any particular operating reserve option.[56] Moreover, in order for demand-side management or any other technology to be used as a spinning reserve resource, it must be technically capable of providing operating reserve service.[57] Accordingly, the Commission proposes to direct the ERO to develop modifications to the definitions of Operating Reserve-Spinning and

[49] NERC Petition, Exhibit C at p. 24 (stating that "the WECC Performance Work Group performed studies in 2005 that show little if any increase in risk to the system by changing the restoration period to the NERC time"). The referenced studies, however, are not part of the record in this proceeding.

[50] *Mandatory Reliability Standards for the Bulk-Power System,* Order No. 693, 72 FR 16416 (Apr. 4, 2007), FERC Stats. & Regs. ¶ 31,242, at P 330 (2007), *order on reh'g,* Order No. 693–A, 120 FERC ¶ 61,053 (2007).

[51] *Id.* P 331, 335.

[52] *Id.* P 333.

[53] *Id.* P 334.

[54] NERC Petition at 40.

[55] Order No. 693, FERC Stats. & Regs. ¶ 31,242 at P 333 (indicating that NERC's continent-wide Reliability Standard should provide for the inclusion of other technologies that may be able to provide contingency reserves, including demand-side management). The Commission understands that NERC is currently developing modifications to BAL–002–0 that will, inter alia, address relevant directives set forth in Order No. 693.

[56] *See id.*

[57] *See id.* P 334.

Operating Reserve-Supplemental to provide for the inclusion of other technologies that could reliably contribute to operating reserves, including demand-side management.[58]

IV. Information Collection Statement

48. The Office of Management and Budget (OMB) regulations require that OMB approve certain reporting and recordkeeping (collections of information) imposed by an agency.[59] The information contained here is also subject to review under section 3507(d) of the Paperwork Reduction Act of 1995.[60] By remanding the proposed Reliability Standard the Commission is maintaining the status quo until future revisions to the Reliability Standard are approved by the Commission. Thus, the Commission's proposed action does not add to or increase entities' reporting burden.

V. Environmental Analysis

49. The Commission is required to prepare an Environmental Assessment or an Environmental Impact Statement for any action that may have a significant adverse effect on the human environment.[61] The Commission has categorically excluded certain actions from this requirement as not having a significant effect on the human environment. Included in the exclusion are rules that are clarifying, corrective, or procedural or that do not substantially change the effect of the regulations being amended.[62] The actions proposed herein fall within this categorical exclusion in the Commission's regulations.

VI. Regulatory Flexibility Act Certification

50. The Regulatory Flexibility Act of 1980 (RFA)[63] generally requires a description and analysis of final rules that will have significant economic impact on a substantial number of small entities. The RFA mandates consideration of regulatory alternatives that accomplish the stated objectives of a proposed rule and that minimize any significant economic impact on a substantial number of small entities. The Small Business Administration's Office of Size Standards develops the numerical definition of a small business.[64] For electric utilities, a firm is small if, including affiliates, it is primarily engaged in the transmission, generation and/or distribution of electric energy for sale and its total electric output for the preceding twelve months did not exceed four million megawatt hours. The RFA is not implicated by this proposed rule because by remanding the proposed Reliability Standard the Commission is maintaining the status quo until future revisions to the Reliability Standard are approved by the Commission.

VII. Comment Procedures

51. The Commission invites interested persons to submit comments on the matters and issues proposed in this notice to be adopted, including any related matters or alternative proposals that commenters may wish to discuss. Comments are due May 24, 2010. Comments must refer to Docket No. RM09–15–000, and must include the commenter's name, the organization they represent, if applicable, and their address in their comments.

52. The Commission encourages comments to be filed electronically via the eFiling link on the Commission's Web site at *http://www.ferc.gov.* The Commission accepts most standard word processing formats. Documents created electronically using word processing software should be filed in native applications or print-to-PDF format and not in a scanned format. Commenters filing electronically do not need to make a paper filing.

53. Commenters that are not able to file comments electronically must send an original and 14 copies of their comments to: Federal Energy Regulatory Commission, Office of the Secretary, 888 First Street, NE., Washington, DC 20426.

54. All comments will be placed in the Commission's public files and may be viewed, printed, or downloaded remotely as described in the Document Availability section below. Commenters on this proposal are not required to serve copies of their comments on other commenters.

VIII. Document Availability

55. In addition to publishing the full text of this document in the **Federal Register,** the Commission provides all interested persons an opportunity to view and/or print the contents of this document via the Internet through FERC's Home Page (*http://www.ferc.gov*) and in FERC's Public Reference Room during normal business hours (8:30 a.m. to 5 p.m. Eastern time) at 888 First Street, NE., Room 2A, Washington, DC 20426.

56. From FERC's Home Page on the Internet, this information is available on eLibrary. The full text of this document is available on eLibrary in PDF and Microsoft Word format for viewing, printing, and/or downloading. To access this document in eLibrary, type the docket number excluding the last three digits of this document in the docket number field.

57. User assistance is available for eLibrary and the FERC's Web site during normal business hours from FERC Online Support at 202–502–6652 (toll free at 1–866–208–3676) or e-mail at *ferconlinesupport@ferc.gov,* or the Public Reference Room at (202) 502–8371, TTY (202) 502–8659. E-mail the Public Reference Room at *public.referenceroom@ferc.gov.*

By direction of the Commission.

Nathaniel J. Davis, Sr.,

Deputy Secretary.

[FR Doc. 2010–6477 Filed 3–23–10; 8:45 am]

BILLING CODE 6717–01–P

[58] The Commission recognizes that there may be regional limitations on the amount of demand-side management, or other technically capable resources, that can be reliably employed. Any modifications proposed to the Commission must allow regional discretion to make this determination based on the technical issues inherent to those regions.

[59] 5 CFR 1320.11.

[60] 44 U.S.C. 3507(d).

[61] *Regulations Implementing the National Environmental Policy Act of 1969,* Order No. 486, FERC Stats. & Regs. ¶ 30,783 (1987).

[62] 18 CFR 380.4(a)(2)(ii).

[63] 5 U.S.C. 601–612.

[64] *See* 13 CFR 121.201.

DEPARTMENT OF STATE

22 CFR Part 22

[Public Notice: 6928]

RIN 1400–AC57 and 1400–AC58

Schedule of Fees for Consular Services, Department of State and Overseas Embassies and Consulates

AGENCY: Department of State.

ACTION: Supplemental notice of proposed rulemaking.

SUMMARY: The Department of State ("Department") published two proposed rules in the **Federal Register** on December 14, 2009, and February 9, 2010, proposing to amend the Schedule of Fees for Consular Services. In this supplemental proposed rule, the Department of State is providing additional supplementary information regarding the Cost of Survey Study (CoSS), the activity-based costing model that the Department used to determine the fees for consular services proposed in. The Department is also re-opening the comment periods on both proposed rules for an additional 15 days.

DATES: Written comments must be received on or before 15 days from the date of publication in the **Federal Register**.

ADDRESSES: Interested parties may submit comments by any of the following methods:

- Persons with access to the Internet may view this notice and submit comments by going to the regulations.gov Web site at: *http://www.regulations.gov/index.cfm.*
- *Mail (paper, disk, or CD–ROM):* U.S. Department of State, Office of the Executive Director, Bureau of Consular Affairs, U.S. Department of State, Suite H1001, 2401 E Street, NW., Washington, DC 20520.
- *E-mail: fees@state.gov.* You must include the RIN (either 1400–AC57 or 1400–AC58, or both) in the subject line of your message.

FOR FURTHER INFORMATION CONTACT: Rob Kline, Office of the Comptroller, Bureau of Consular Affairs, phone (202) 663–2513. E-mail: *fees@state.gov.*

SUPPLEMENTARY INFORMATION:

Background

The Department of State ("Department") published two proposed rules in the **Federal Register** on December 14, 2009 (74 FR 66076, Public Notice 6851, RIN 1400–AC57), and on February 9, 2010 (75 FR 6321, Public Notice 6887, RIN 1400–AC58), proposing to amend sections of part 22 of Title 22 of the Code of Federal Regulations, the Schedule of Fees for Consular Services. The Department's proposed rules solicited comments, and a number of comments requested additional detail on the Consular Services Cost of Service Study (CoSS) as well as time to comment on that detail. In response, the Department is providing the additional written detail below.

Additional Detail on the Cost of Service Study

Activity-Based Costing Generally

Office of Management and Budget (OMB) Circular A–25 states that it is the objective of the United States Government to "(a) ensure that each service, sale, or use of Government goods or resources provided by an agency to specific recipients be self-sustaining; [and] (b) promote efficient allocation of the Nation's resources by establishing charges for special benefits provided to the recipient that are at least as great as costs to the Government of providing the special benefits * * *." OMB Circular A–25, ¶ 5(a)–(b); see also 31 U.S.C. 9701(b)(2)(A) (agency "may prescribe regulations establishing the charge for a service or thing of value provided by the agency * * * based on * * * the costs to the Government * * *."). To set prices that are "self-sustaining," the Department must determine the true cost of providing consular services. Following guidance provided in Statement #4 of OMB's Statement of Federal Accounting Standards (SFFAS), available at *http://www.fasab.gov/pdffiles/sffas-4.pdf*, the Department chose to develop and use an activity-based costing (ABC) model to determine the true cost of the services listed in its Schedule of Fees, both those whose fee the Department proposes to change, as well as those whose fee will remain unchanged from prior years. The Department refers to the specific ABC model that underpins the proposed fees in the above-referenced rules as the "Cost of Service Study" or "CoSS."

The Government Accountability Office (GAO) defines activity-based costing as a "set of accounting methods used to identify and describe costs and required resources for activities within processes." Because an organization can use the same staff and resources (computer equipment, production facilities, etc.) to produce multiple products or services, ABC models seek to precisely identify and assign costs to processes and activities and then to individual products and services through the identification of key cost drivers referred to as "resource drivers" and "activity drivers."

Example: Imagine a government agency that has a single facility it uses to prepare and issue a single product—a driver's license. In this simple scenario, every cost associated with that facility (the salaries of employees, the electricity to power the computer terminals, the cost of a blank driver's license, etc.) can be attributed directly to the cost of producing that single item. If that agency wants to ensure that it is charging a "self-sustaining" price for driver's licenses, it only has to divide its total costs for a given time period by an estimate of the number of driver's licenses to be produced during that same time period.

However, if that agency issues multiple products (driver's licenses, non-driver ID cards, etc.), has employees that work on other activities besides licenses (for example, accepting payment for traffic tickets), and operates out of multiple facilities it shares with other agencies, it becomes much more complex for the agency to determine exactly how much it costs to produce any single product. In those instances, the agency would need to know what percent of time its employees spend on each service and how much of its overhead (rent, utilities, facilities maintenance, etc.) are consumed in delivering each service to determine the cost of producing each of its various products—the driver's license, the non-driver ID card, etc. Using an ABC model would allow the agency to develop those costs.

Components of Activity-Based Costing

As noted in SFFAS Statement #4, "activity-based costing has gained broad acceptance by manufacturing and service industries as an effective managerial tool." SSFAS Statement #4, ¶ 147. There are no "off-the-shelf" ABC models that allow the Department (or any other entity) to simply populate a few data points and generate an answer. ABC models require financial and accounting analysis and modeling skills combined with a detailed understanding of all the organization's business processes, which, in an entity the size of the Department's Bureau of Consular Affairs, are exceedingly complex. More specifically, ABC models require an organization to:

- Identify all of the activities that are required to produce a particular product or service ("activities");
- Identify all of the resources consumed (costs) in the course of producing that product or service ("resources");
- Measure the quantity of resources consumed ("resource driver"); and
- Measure the frequency and intensity of demand placed on activities to produce services ("activity driver").

For more information, SFFAS Statement #4 provides a detailed discussion of the use of cost accounting by the U.S. Government.

Example: To consume a peanut butter and jelly sandwich, a person might engage in multiple activities: grocery shopping, sandwich making, sandwich eating, and kitchen cleaning. Each of these activities consumes resources: grocery shopping, for example, requires gas to drive to the store, time to make the trip, and money to buy the peanut butter, jelly, and bread. A person might be able to make 25 peanut butter and jelly sandwiches with a single jar of peanut butter; as a result, the resource driver for peanut butter would be 1/25th of a jar of peanut butter. If a person chooses to eat two peanut butter and jelly sandwiches at a meal, the activity driver for "kitchen cleaning" would be ½ since the person would eat two sandwiches, but only have to clean the kitchen once.

Although the Department has used a sophisticated and detailed ABC model to set fees for a number of years, in its October 10, 2007, report "Transparent Cost Estimates Needed to Support Passport Execution Fee Decisions," available at *http://www.gao.gov/products/GAO–08–63,* the GAO asked the Department to expand the sophistication of its cost model by identifying even more discrete activities and modeling a broader array of products and services. To provide this additional detail, the Department launched a multi-year plan to refine the CoSS with the help of a team of experienced outside consultants led by The QED Group, LLC, and including Booz Allen Hamilton, Inc. as a

subcontractor. The consultant team was made up of experts in cost modeling capable of providing an objective, outside assessment of costs.

Consular Service Activities

Working with its consultants, the Department reviewed all of its consular operations and identified 262 distinct activities—including 77 visa-specific activities, 11 passport-specific activities, 58 activities specific to overseas citizen services, and 116 cross-cutting activities (such as cashiering, fraud prevention, and public affairs outreach). This list includes more than five times as many activities than the Department's cost model from the prior CoSS, which broke out 52 activities. The Department provides the following examples of some of the activities that make up a consular operation to illustrate the substantial complexity that the CoSS must be capable of taking into account:

• Processing a passport book (Items 1, 2a/2b, and 2g of the proposed Schedule of Fees). Fifty-two separate CoSS activities are required to process a first-time application for a passport book, including the following actions:

—Public outreach, such as maintaining passport information on the Department's Web site (*http://travel.state.gov*) and operating appointment systems for our passport agencies;
—Answering phone and written inquiries from the public regarding passport rules and pending applications;
—Nine separate activities related to data entry of applications, from capturing applicant photos and processing payment to supervisor audits of the process;
—Investigation of and coordination with federal law enforcement on potentially fraudulent applications;
—Actual adjudication of the application;
—Production of the personalized passport itself; and
—Archiving completed applications for future reference.

• Adding additional visa pages to a passport (Item 2c of the proposed Schedule of Fees). Among the 51 activities involved in adding additional pages to a passport are the following:

—Receiving the application and entering data from it into the system;
—Performing a name check for the applicant and reviewing the results to determine if there any legal impediments to providing the service, such as an outstanding federal warrant for the applicant's arrest;
—Physically affixing the pages to the passport; and
—Auditing of the process by a supervisor.

• Processing a non-petition-based machine-readable nonimmigrant visa (MRV) (Item 21a of the proposed schedule of fees). Ninety-nine CoSS activities are required in processing an application for a non-petition-based MRV, such as a tourist visa, including:

—Public outreach, such as responding to public inquiries as to the status of MRV applications;
—Conducting an interview of the MRV applicant;
—Collecting biometrics from the MRV applicant;
—Actual adjudication of the application;
—Requesting advisory opinions from attorneys at headquarters regarding how specific laws and regulations apply to complicated applications;
—Requesting security advisory opinions from headquarters about applicants the consular officer believes may present a risk to U.S. national security;
—Investigating possible fraud in those applications; and
—Producing the actual, physical visa, affixing it to the applicant's passport, and returning that product to the applicant.

• Processing a fiancé(e) (K category) MRV (Item 21d). One hundred and three CoSS activities are required to process an application for a K1-category fiancé(e) nonimmigrant visa, including:

—Pre-processing of the case at the National Visa Center, where the petition is received from the Department of Homeland Security, packaged and assigned to the appropriate embassy or consulate; and
—Intake and review of materials required for a K visa that are not required for other nonimmigrant visas, such as the I–134 affidavit of support and the DS–2054 medical examination report;
—Conducting an interview of the K visa applicant;
—Collecting biometrics from the K visa applicant;
—Actual adjudication of the application;
—Requesting legal opinions from headquarters as necessary;
—Investigating possible fraud in those applications; and
—Producing the physical visa, affixing it to the applicant's passport, and returning that product to the applicant.

• Processing a letter rogatory (Item 51). Sixty CoSS activities are required to service a request for a letter rogatory, covering actions including:

—Receipt of the request at headquarters and dispatch of a telegram to an embassy or consulate instructing that the service be initiated;
—Preparation of a diplomatic note to be sent to the appropriate foreign government; and
—Monitoring the case as it progresses through foreign government channels, and regularly updating the customer on the status of the case.

By taking the 52 activities from the prior CoSS and breaking them down further into 262 activities in the current CoSS, the Department was able to model its costs much more precisely. As a result, the Department was able to identify differences in both resource drivers and activity drivers that had previously been obscured. For example, the Department has better data now on how much additional time a consular officer spends on reviewing the case file for a K fiancé(e) visa (resource driver) as well as how much more frequently an officer seeks assistance from fraud prevention resources as part of a K visa application (activity driver) compared to a standard tourist visa application. Not surprisingly, this additional detail has dramatically increased the complexity of the CoSS because the Department now matches costs with activities at a more granular level.

Determining the Cost of Performing Each Consular Activity

After defining each activity, the Department used the CoSS model to determine the total costs to perform that activity. As noted in SFFAS Statement #4, "[d]epending on feasibility and cost-benefit considerations, resource costs may be assigned to activities in three ways: (a) Direct tracing; (b) estimation based on surveys, interviews, or statistical sampling; or (c) allocations." SSFAS Statement #4, ¶ 149(2).

Direct trace costs are quite obvious and easy to identify. For the activities listed above they include, for example, what the Department pays for each physical passport book, the paper affixed to the book of a customer who requests additional pages, or the visa foil that is placed into an applicant's passport.

Determining how to assign other types of costs to activities is much more difficult than direct trace costs since an employee or resource may be involved in many different activities or processes. To give a few examples from among the large number of factors that go into determining "assigned costs" for the scores of consular services, such costs would include how much time a passport specialist spent to adjudicate a particular passport application; how

much time a passport agency employee spent processing payment for a passport; how much time another employee spent performing a quality-control check on this and other passport work; how much time a consular officer at an embassy or consulate spent interviewing a visa applicant, and another employee spent taking the applicant's fingerprints; how much time that officer then spent adjudicating the visa application; how much time the fraud unit spent investigating whether bank documents submitted in a visa application are fraudulent; and how much time legal staff at headquarters spent determining whether an individual's claim to citizenship is adequately documented.

Finally, the third set of costs, allocated costs, is neither obvious nor easy to trace. With assigned costs, the entire amount is counted as a consular cost and the decision is what share of that cost should be assigned to what activity. In determining allocated costs, only a portion of the whole are included in the model because only that portion can be assigned to consular activities. One example of this is the Department's Bureau of Human Resources, which provides services to all of the Department. The CoSS model includes only a portion of that Bureau's costs, based on the percentage of Department employees who perform consular work. To provide another example, when considering the cost to keep a particular facility (embassy, consulate, passport agency, etc.) functioning, the Department first determined what portion of that facility is used to provide consular services, and then allocated within the CoSS model how much of that smaller amount should be charged to the activities associated with providing a given customer with a given service—such as a passport or a nonimmigrant visa—at that location.

The Department estimates that, on the whole, 19.6% of its consular costs are direct trace, 60.7% are assigned costs, and the remaining 19.7% are allocated costs, although the exact breakdown of these costs varies by activity. Given that such a high percentage of the Department's costs are assigned or allocated costs, the Department devoted substantial efforts to modeling these costs.

Assigning Costs

To assign labor costs, the Department relied on a variety of industry standard estimation methodologies. For example, the Department analyzed passport agency task reports to determine how much time passport specialists working at a passport agency devote to particular tasks—for example, time spent serving customers in the window versus time spent in training or performing administrative duties versus time spent actually adjudicating passports. To estimate how much time consular officers overseas spend on consular activities, the Department asked consular officers at 200 overseas posts to complete a 98-question survey. This survey asked Consular Affairs personnel to break out the time they spend on each consular activity they perform during a typical month—visa interviews, visa adjudication, passport adjudication, performing welfare and whereabouts visits, responding to judicial assistance requests from American citizens abroad, notarizing documents for American citizens abroad, issuing consular reports of birth abroad, and so forth. The responses to the survey were then used to develop resource drivers to assign labor costs to activities. To give one example, in the survey responses, foreign service national (FSN) employees in Mumbai, India, indicated that as a whole they spent 6,586 hours on consular activities in a typical month, of which 955 hours (14.5% of their time) were spent on performing nonimmigrant visa application intake. Total annual compensation for Mumbai FSNs was $783,988. Based on the percentage calculated above, 14.5% of their compensation, or $113,678, was calculated as the cost of this one activity for this one post for this one labor category.

To assign activity costs to the individual services, the Department extracted volume data by product type from its data systems. For example, to determine how to assign the costs of adjudicating nonimmigrant visas, the Department analyzed the volume of nonimmigrant visas issued by category (B, H, K, L, and so forth) for a given time period, which in turn became the activity driver for this data. For activities at embassies and consulates abroad, this volume data is collected from the "Consular Package" every consular section submits annually via the Internet-based Consular Workload Statistics System (CWSS). For more than 30 years, the Consular Package has been the single most important document consular managers use to report, plan, and budget for consular operations, and is the key document linking consular objectives to resource and personnel requirements. CWSS collects and evaluates data from 239 individual consular sections in consulates and embassies worldwide, and provides customizable reports of available data. CWSS is designed to provide the most comprehensive picture of each post's consular operations and cumulatively of embassies and consulates by region and worldwide. It provides an overview of the volume and nature of the embassy's or consulate's consular workload; personnel and work hours devoted to it; the challenges faced; and the outlook for the future. These reports yield a wealth of data and are an exceptionally valuable management tool for determining consular resource needs. Volume data for all consular services the Department provides at its embassies and consulates overseas—passport and citizenship services, emergency services to American citizens, nonimmigrant and immigrant visa services, judicial services, etc.—is captured from the CWSS. Using the Mumbai example above, the costs for the processing of nonimmigrant visa application intake activity were assigned to nonimmigrant visas according to volume by visa category, as collected from the CWSS—an activity driver referred to as "nonimmigrant visa applications." Of the 253,394 nonimmigrant visas issued in Mumbai during FY 2008, 209,120 (82.5%) of them were "base MRVs," that is non-petition-based nonimmigrant visas (excluding the E category). Thus, 82.5% of the FSN costs for this activity ($93,784 of the $113,678 total) were assigned to "base MRVs" for this one cost element.

For consular activities that take place in the United States, the Department collects volume data from periodic workload reports pertaining to the passport or visa facilities in question. For example, for volume data on the processing of passport applications or requests for additional pages submitted to one of the many passport agencies in cities across the United States, the Department collects volume data from monthly workload reports pulled from the passport management information system, a management database.

After collecting and analyzing all available cost and workload data, the Department converted this raw data into resource drivers and activity drivers for each resource and activity. The resulting 14-gigabyte database constitutes the CoSS model. Because the CoSS is a complex series of iterative computer processes incorporating more than a million calculations, it cannot itself be reduced to a tangible form such as a document, notwithstanding the use of the word "study" in the term "cost of service study."

The final component required to determine unit costs is "scenario planning," described in the following section.

Scenario Planning

Scenario planning allowed the Department to predict levels of future demand for specific services and evaluated their impact on unit costs. Without scenario planning, an activity-based costing model can only determine historical costs, or how much it cost to produce something in the past. As there is no mechanism for the Department to charge retroactive fees to recipients of prior services, and in accordance with OMB objectives, the Department endeavors to determine a "self-sustaining" price for future service delivery. OMB Circular A–25, ¶ 5(a). Through scenario planning, the Department can convert historical data about service costs into forward-looking estimates of how much a service will cost in the future.

Private industry has significantly greater flexibility in altering its personnel and overhead costs based on changes in demand than do government agencies. As roughly 70% of the workforce involved in providing consular services are full-time federal employees, if demand for a service falls precipitously, the Department cannot shed employees as quickly as the private sector. (For that matter, should demand rise precipitously, the Department cannot add employees as quickly, since delivering the vast majority of consular services requires specially trained employees, and these persons cannot begin their training until they have completed the federal hiring process and passed a security clearance.) Additionally, given government procurement rules and security requirements, the Department commits to many of its facilities and infrastructure costs years before a facility comes online. Even if demand changes, the Department is still obligated to cover these costs. As a result, when setting fees, the Department must assume that the majority of its short-term costs cannot drop significantly. Given these and other constraints on altering the Department's cost structure in the short term, changes in service volumes can have dramatic effects on whether a fee is "self-sustaining," and forecasting demand becomes crucial.

Example: In the original example above involving the issuance of driver's licenses, assume that the agency is obligated to spend $1 million per year on staff and facilities costs regardless of how many applicants apply for a driver's license. If that agency believes 100,000 people will apply for a driver's license next year, then charging $10 for each driver's license would be a "self-sustaining" fee. However, if only 75,000 people actually applied for a $10 driver's license, the agency would face a $250,000 budget shortfall (or 25% of its total budget). If the agency had known in advance that demand was more likely to be 75,000 people in the next year, it could have set a self-sustaining price of $13.33 for each license.

The Department devotes significant internal resources to monitoring current demand for consular services and forecasting future demand. After reviewing its own historical data and conferring with its CoSS consultants from the team led by The QED Group, the Department developed a range of demand scenarios for each service or product that it ran through its model. From this range, the Department deliberated and, based on historical demand and experience, chose the most likely demand scenario for each service or product. It then used this demand scenario to populate the final version of the CoSS.

These estimates took into account, among other factors, the likely impact of the global economic downturn on demand for consular services.

Using the activities listed above as examples, the Department forecasted that it will receive in FY 2010:

—A total of 13,618,092 applications for passport products, an 18.5% decrease from actual figures in FY 2008, the last full year available to the Department at the time it modeled the fees proposed in the rules at issue in this notice, and a year in which impending Western Hemisphere Travel Initiative (WHTI) implementation resulted in very high demand;

—217,576 applications for extra passport pages, a 5.3% decrease from FY 2008 due to the post-WHTI decrease in overall demand for passport products;

—5,787,040 applications for nonimmigrant visas that do not require a petition, a 10.6% decrease from FY 2008 due to the addition of eight countries to the Visa Waiver Program and the effects of the global economic downturn;

—98,077 applications for K1-category fiancé(e) visas, a 10.7% decrease from FY 2008 due to the decrease in overall demand for visas resulting from the global economic downturn;

—543 requests for processing of letters rogatory and Foreign Sovereign Immunities Act (FSIA) judicial assistance cases, a 20.9% increase from FY 2008 based on the historical rates of increase for judicial services requests.

Running the Data Through the CoSS Model

The costs the Department entered into the CoSS model included every line item of costs for the Department, including items such as physical material for making passports and visas, salaries, rent, supplies, travel, and so forth. The Department then determined a resource driver (from, for example, the responses to the overseas survey, data from the passport agency task report, etc.) for each of these costs, as discussed in the "Assigning Costs" section above, and entered the resource drivers and assignments into the model. This allowed the model to calculate the activity cost for each activity. The Department then selected an activity driver, such as the volume data from CWSS discussed above, for each activity, in order to assign these costs to each service type. This process allowed the model to calculate a total cost for each of the Schedule of Fees' line items for visa services, passport services, and overseas citizen services. The model then divided this total cost by the total volume of the service or product in question in order to determine a final unit cost for the service or product for the historical base year. Projected cost increases for predictive years were also included to take account of changes inter alia in the size of consular staff, the exchange rates, inflation, and cost of living factors. At this stage, the final demand projections discussed in the "Scenario Planning" section above were applied to each appropriate element in the model using business rules that allowed the model to project unit costs for future years. The calculation of these costs allowed the Department to determine the appropriate fee to propose. As this series of calculations demonstrates, the CoSS is an extremely complex yet comprehensive model that captures historical costs while attempting to predict future costs based on the Department's best knowledge and predictive abilities.

Conclusion

Based on the information outlined and explained above, the Department believes these fees are entirely consistent with the objective in OMB Circular A–25 to "promote efficient allocation of the Nation's resources by establishing charges for special benefits provided to the recipient that are at least as great as costs to the Government of providing the special benefits * * *." OMB Circular A–25, ¶ 5(b). The Department takes seriously its obligation to be a good steward of public resources (including user fees) and

understands clearly the important role it plays in encouraging and enabling international trade and commerce.

As noted above, the Department determined its proposed fees using a federally approved fee-setting model—activity-based costing—developed with the assistance of independent professional consultants experienced in activity-based cost modeling, and believes that these proposed fees will be self-sustaining when implemented. Moreover, the Department continues to refine and update the CoSS so it can regularly monitor its fees and make adjustments as required to continue to set fees commensurate with what it costs the Department to provide the service in question.

Dated: March 18, 2010.

Patrick F. Kennedy,

Under Secretary of State for Management, Department of State.

[FR Doc. 2010–6490 Filed 3–23–10; 8:45 am]

BILLING CODE 4710–06–P

ENVIRONMENTAL PROTECTION AGENCY

40 CFR Part 52

[EPA–R05–OAR–2007–0587; FRL–9130–1]

Approval of Implementation Plans of Wisconsin: Nitrogen Oxides Reasonably Available Control Technology

AGENCY: Environmental Protection Agency (EPA).

ACTION: Proposed rule.

SUMMARY: EPA is proposing to approve revisions to the Wisconsin State Implementation Plan (SIP) submitted on June 12, 2007 and on September 14, 2009. These revisions incorporate provisions related to the implementation of nitrogen oxides (NO_X) Reasonably Available Control Technology (RACT) for major sources in the Milwaukee-Racine and Sheboygan ozone nonattainment areas. EPA is proposing to approve SIP revisions that address the requirements found in section 182(f) of the Clean Air Act (CAA). EPA is also proposing to approve other miscellaneous rule changes that affect NO_X regulations that were previously adopted and approved into the SIP.

DATES: Comments must be received on or before *April 23, 2010.*

ADDRESSES: Submit your comments, identified by Docket ID No. EPA–R05–OAR–2007–0587, by one of the following methods:

1. *http://www.regulations.gov:* Follow the on-line instructions for submitting comments.
2. *E-mail: damico.genevieve@epa.gov.*
3. *Fax:* (312) 385–5501.
4. *Mail:* Genevieve Damico, Acting Chief, Criteria Pollutant Section, Air Programs Branch (AR–18J), U.S. Environmental Protection Agency, 77 West Jackson Boulevard, Chicago, Illinois 60604.
5. *Hand Delivery:* Genevieve Damico, Acting Chief, Criteria Pollutant Section, Air Programs Branch (AR–18J), U.S. Environmental Protection Agency, 77 West Jackson Boulevard, Chicago, Illinois 60604. Such deliveries are only accepted during the Regional Office normal hours of operation, and special arrangements should be made for deliveries of boxed information. The Regional Office official hours of business are Monday through Friday, 8:30 a.m. to 4:30 p.m., excluding Federal holidays.

Instructions: Direct your comments to Docket ID No. EPA–R05–OAR–2007–0587. EPA's policy is that all comments received will be included in the public docket without change and may be made available online at *http://www.regulations.gov,* including any personal information provided, unless the comment includes information claimed to be Confidential Business Information (CBI) or other information whose disclosure is restricted by statute. Do not submit through *http://www.regulations.gov* or e-mail, information that you consider to be CBI or otherwise protected. The *http://www.regulations.gov* Web site is an "anonymous access" system, which means EPA will not know your identity or contact information unless you provide it in the body of your comment. If you send an e-mail comment directly to EPA without going through *http://www.regulations.gov,* your e-mail address will be automatically captured and included as part of the comment that is placed in the public docket and made available on the Internet. If you submit an electronic comment, EPA recommends that you include your name and other contact information in the body of your comment and with any disk or CD–ROM you submit. If EPA cannot read your comment due to technical difficulties and cannot contact you for clarification, EPA may not be able to consider your comment. Electronic files should avoid the use of special characters and any form of encryption and should be free of any defects or viruses. For additional information about EPA's public docket visit the EPA Docket Center homepage at *http://www.epa.gov/epahome/dockets.htm.*

Docket: All documents in the electronic docket are listed in the *http://www.regulations.gov* index. Although listed in the index, some information is not publicly available, *i.e.,* CBI or other information whose disclosure is restricted by statute. Certain other material, such as copyrighted material, is not placed on the Internet and will be publicly available only in hard copy form. Publicly available docket materials are available either electronically in *http://www.regulations.gov* or in hard copy at the Environmental Protection Agency, Region 5, Air and Radiation Division, 77 West Jackson Boulevard, Chicago, Illinois 60604. This facility is open from 8:30 a.m. to 4:30 p.m., Monday through Friday, excluding Federal holidays. We recommend that you telephone Douglas Aburano, Environmental Engineer, at (312) 353–6960, before visiting the Region 5 office.

FOR FURTHER INFORMATION CONTACT: Douglas Aburano, Environmental Engineer, Criteria Pollutant Section, Air Programs Branch (AR–18J), Environmental Protection Agency, Region 5, 77 West Jackson Boulevard, Chicago, Illinois 60604, (312) 353–6960, *aburano.douglas@epa.gov.*

SUPPLEMENTARY INFORMATION:

Table of Contents

I. What Action Is EPA Proposing To Take?
II. W hat Are the NO_X RACT Requirements?
III. Analysis of Wisconsin's NO_X RACT Submittal
IV. Proposed Action
V. Statutory and Executive Order Reviews

I. What Action Is EPA Proposing To Take?

Throughout this document wherever "we," "us," or "our" are used, we mean EPA.

NO_X RACT Approval

EPA is proposing to approve revisions to Wisconsin's SIP, submitted on June 12, 2007 and on September 14, 2009. The CAA amendments of 1990 introduced the requirement for existing major stationary sources of NO_X in nonattainment areas to install and operate NO_X RACT. Specifically, section 182(b)(2) of the CAA requires States to adopt RACT for all major sources of volatile organic compounds (VOC) in ozone nonattainment areas; section 182(f) extends the RACT provisions to major stationary sources of NO_X.

Wisconsin was not required to adopt NO_X RACT rules under the 1-hour ozone standard because all of the ozone nonattainment areas in Wisconsin were

covered by a NO_X waiver that was approved in the **Federal Register** on January 26, 1996 (61 FR 2428). This NO_X waiver, issued under section 182(f) of the CAA, exempted the affected areas from the RACT and nonattainment New Source Review requirements for major stationary sources of NO_X. Wisconsin is, however, required to adopt NO_X RACT rules for the 1997 8-hour ozone standard because a NO_X waiver has not been issued under this ozone standard. The NO_X RACT submittals were due on September 15, 2006.

Approval of Other Non-RACT NO_X Rules

Additionally, the Wisconsin Department of Natural Resources (WDNR) submitted minor additions and amendments to other non-RACT NO_X rules as part of the June 12, 2007 and September 14, 2009 submittals. The non-RACT NO_X rules that are being changed were originally approved into Wisconsin's SIP on November 13, 2001 (66 FR 56931). These other NO_X rules were submitted as part of Wisconsin's reasonable further progress SIP for the 1-hour ozone standard.

II. What Are the NO_X RACT Requirements?

The CAA amendments of 1990 introduced the requirement for existing major stationary sources of NO_X in nonattainment areas to install and operate NO_X RACT. Specifically, section 182(b)(2) of the CAA requires States to adopt RACT for all major sources of VOC in ozone nonattainment areas, and section 182(f) requires the RACT provisions for major stationary sources of oxides of nitrogen. "RACT" is defined as the lowest emission limitation that a particular source is capable of meeting by the application of control technology that is reasonably available considering technological and economic feasibility (44 FR 53762).

Section 302 of the CAA defines major stationary source as any facility which has the potential to emit 100 tons per year of any air pollutant. For serious ozone nonattainment areas, a major source is defined by section 182(c) as a source that has the potential to emit 50 tons of NO_X per year. For severe ozone nonattainment areas, a major source is defined by section 182(d) as a source that has the potential to emit 25 tons per year.

These requirements can be waived under section 182(f) of the CAA. See EPA memo dated December 16, 1993 from John Seitz, Director, Office of Air Quality Planning and Standards to Air Division Directors entitled, "Guideline for Determining the Applicability of Nitrogen Oxide Requirements Under Section 182(f)." Waivers can be granted if the Administrator determines that any one of the following tests is met:

1. In any area, the net air quality benefits are greater in the absence of NO_X reductions from the sources concerned;

2. In nonattainment areas not within an ozone transport region, additional NO_X reductions would not contribute to ozone attainment in the area; or

3. In nonattainment areas within an ozone transport region, additional NO_X reductions would not produce net ozone air quality benefits in the transport region.

Wisconsin received a NO_X waiver under the 1-hour ozone standard on January 26, 1996 and, therefore, was not required to adopt NO_X RACT regulations for that standard. However, there are areas in Wisconsin that are nonattainment for the 1997 8-hour ozone standard. These areas were designated nonattainment on June 15, 2004 (69 FR 23947). Because Wisconsin does not have a waiver for the NO_X requirements for the 1997 8-hour ozone standard, NO_X RACT rules are required in the areas that are classified as moderate or above.

Since the only areas in Wisconsin that are required to adopt NO_X RACT are classified as moderate for the 1997 8-hour ozone standard, the rules that have been adopted only need to address sources with the potential to emit 100 tons per year. The NO_X RACT rules were to have been submitted September 15, 2006.

III. Analysis of Wisconsin's NO_X RACT Submittal

A. Nature of Wisconsin's Submittal

On June 12, 2007, Wisconsin submitted rules and supporting material for addressing the NO_X RACT requirements. WDNR held a public hearing for these rules on March 15, 2007. WDNR also provided a comment period that was announced on February 2, 2007 and ended on March 19, 2007.

On September 14, 2009, Wisconsin submitted a supplemental SIP revision and additional supporting material for addressing the NO_X RACT requirements. WDNR held a public hearing for these rules on December 5, 2008. WDNR also provided a comment period that was announced on October 30, 2008 and ended on December 10, 2008.

B. Summary of Wisconsin's Rules

June 12, 2007 Submittal

Chapter NR 428 of the Wisconsin Administrative Code Environmental Protection Air Pollution Control, entitled, "Control of Nitrogen Compound Emissions," includes provisions limiting the emissions of NO_X from stationary sources in Wisconsin. While Ch. NR 428 contains many sections, Wisconsin submitted only a portion of them to address the NO_X RACT requirements. Specifically, Wisconsin submitted rules 428.02(7m), 428.04(2)(h)1. and 2., 428.05(3)(e)1. to 4., 428.20 through 428.26, 484.04(13), 484.04(15m) and (16m), and 484.04(21m), (26m)(bm), (26m)(d), and (27) for Federal approval.

The RACT rules establish NO_X emission limitations for major sources in the moderate ozone nonattainment areas of Wisconsin, which include the counties of Kenosha, Milwaukee, Ozaukee, Racine, Sheboygan, Washington, and Waukesha. Major sources in those counties were required to be in compliance with the NO_X RACT program by May 1, 2009. The RACT rules have been adopted and passed by all necessary State law-making bodies, and the rules became effective on August 1, 2007.

The RACT rules require individual emission units at a major source to be in compliance with specific emission limitations defined by source category and fuel types. The NO_X emission limitations are defined based on available control technologies and cost-effectiveness of up to $2,500 per ton of controlled NO_X. However, the emission limits are not applicable if the unit operates below an ozone season threshold level that is related to cost-effectiveness of control. Once a unit exceeds the threshold during any ozone season after the effective date of the rule, it is always subject to the RACT requirements. A phased compliance schedule is specified for electric utility coal fired boilers to account for installation and electric reliability needs. All emission limitations across the source categories are expressed on a 30-day rolling basis and are to be met on a year-round basis.

The rules require compliance monitoring, record keeping, and reporting specified for each source category. For units already required to do so, emissions are to be measured according to 50 CFR Part 75 CEMs monitoring requirements. Remaining units are specified by source category to either install and operate continuous NO_X emission monitors according to 40 CFR Part 60 methods or perform stack testing every two years. The rules specify the methods and calculations used to tabulate emissions under each requirement. Units are required to have

a malfunction and abatement plan for the monitoring system.

The rules establish a number of default exemptions from the emission limits for units meeting certain conditions. The exemptions streamline compliance by identifying sources for which control cost-effectiveness is beyond that considered in the rules. These sources otherwise would likely qualify for a variance to the RACT requirement. The rules identify minimal recordkeeping requirements to ensure continued qualification under the applicable exemption. There are generally two bases for the exemptions: (1) unit types or applications with low operation levels; and (2) units which are meeting the emission limit and have sufficient monitoring requirements in place or are well controlled and for which the incremental control to meet the RACT emission limit is significantly more costly.

Alternative compliance methods in the rule include emissions averaging, a case-by-case RACT determination, and a Clean Air Interstate Rule (CAIR) equivalency provision. These programs have been structured to meet EPA's guidance for economic incentive programs, public notification, and review requirements.

Lastly, to address utility reliability issues, the rules allow an entity to request a temporary waiver of an emission limit. This provision establishes a process to evaluate an emission limit exceedance due to an uncontrollable or unforeseeable event during the course of which service must be maintained to un-interruptible customers. The request for a waiver is after the event and is subject to review and approval of both WDNR and EPA.

The major provisions of the RACT rules are:

NR 428.02 Definitions
NR 428.20 Applicability and purpose.
NR 428.21 Emission unit exceptions.
NR 428.22 Emission limitation requirements.
NR 428.23 Demonstrating compliance with emission limitations.
NR 428.24 Record keeping and reporting.
NR 428.25 Alternative compliance methods and approaches.
NR 428.26 Utility reliability waiver.

Provisions related to the RACT rule are:

NR 400 Air pollution control definitions
NR 439 Reporting, recordkeeping, testing, inspection, and determination of compliance requirements
NR 484.04 Incorporation by reference.

Several non-substantive modifications are included in this package addressing the units of applicable emission limitations for reciprocating engines under existing NR 428 requirements.

September 14, 2009 Submittal

The Wisconsin Natural Resources Board adopted an order to: renumber and amend 428.22(1)(d); amend NR 428.04(1) and (3)(b), 428.05(1) and (4)(b)2., 428.07(intro.), (1)(a) and (b)1. and 3., (3) and (4)(c), 428.08(title) and (2)(title), 428.09(2)(a), 428.20(1), 428.22(2)(intro.), 428.23(1)(b)1., 428.24(1)(b)(intro.) and 428.25(1)(a)1.a. and c. and (3)(b); and to create NR 428.02(7e), 428.08(2)(f), 428.12, 428.22(1)(d)2., and 428.23(1)(b)9., relating to modification of existing rules for control of NO_X emitted by stationary sources in the ozone nonattainment area in southeastern Wisconsin. The proposed revisions relate to issues for SIP approvability and miscellaneous implementation issues.

The rule revisions address two areas: (1) Incorporating the term and a definition of "maximum theoretical emissions" in place of "potential to emit" in order to adequately identify major sources; and (2) revisions identified by the department and stakeholders which clarify and facilitate implementation of requirements within ch. NR 428.

There are a number of non-substantive revisions in the rule that address clarification and implementation issues, which are consistent with the original intent of the rules. These revisions include:

1. Removal of the reference to the Federal CAIR and usage of standard terms in identifying the appropriate units.

2. Allowance of additional time for sources to submit an application for an alternative emission limit or compliance schedule.

3. Allowance for a source with an approved alternative RACT requirement to participate in emissions averaging for purposes of demonstrating compliance with the original RACT limitation or schedule.

4. The revision avoids triggering *new source* NO_X limits under rule NR 428.04 when the modification is made solely to comply with *existing source* NO_X control requirements under rules NR 428.05 or 428.22.

5. Clarification and simplification of monitoring and reporting requirements.

6. Removal of the reference to "modified" sources in the applicability statement in rule NR 428.05(1).

7. Identification of limited periods when the current form of the emission limitation for glass furnaces is not appropriate. During these periods the numerical emission limit does not apply. Instead, the source is required to minimize NO_X emissions through combustion optimization techniques described in rule NR 439.096.

There are no changes from the June 12, 2007 submittal that alter the primary emission limitations or that alter those individual emissions units subject to emission requirements.

C. Review of Wisconsin Submittal

NO_X RACT Portion of June 12, 2007 and September 14, 2009 Submittals

The WDNR created Subchapter IV entitled "NO_X Reasonably Available Control Technology Requirements" to address the NO_X RACT requirements of the CAA. Subchapter IV consists of rules 428.20 through 428.26.

Rule 428.20 "Applicability and Purpose" establishes the geographic scope of the rule and the sources that are subject to the rule. The rules apply in the nonattainment areas that are classified as moderate under the 1997 8-hour ozone standard. There are no nonattainment areas with a classification higher than moderate in Wisconsin. Therefore, the rules apply in the Milwaukee-Racine area (Kewaunee County, Milwaukee County, Ozaukee County, Racine County, Washington County, and Waukesha County) and Sheboygan County. The requirements apply to the owner or operator of a NO_X emissions unit which is located at a facility with a combined total potential to emit for all NO_X emissions units of 100 tons per year or more. This is consistent with the CAA and EPA guidance. Rule 428.20 refers to Wisconsin's definition of "Maximum theoretical emissions" found in Wisconsin rule NR 428.02(7e). These two rules, in combination, satisfy the requirements for adequate applicability.

NR 428.02 "Definitions" adds the definition of "maximum theoretical emissions," rule NR 428.02(7e). This addition is acceptable. It is referred to under NR 428.20, the "Applicability and purpose" section of the NO_X RACT rules.

NR 428.21 "Emission unit exceptions" exempts certain units from emission limits but still requires monitoring emissions and keeping records for these units. Should these units no longer qualify for an exemption, emission limits will then apply. The rule establishes a number of default exemptions from the emission limits for units meeting certain conditions. The rule identifies minimal recordkeeping requirements to ensure continued qualification under the applicable exemption. There are generally two

bases for the exemptions: (1) Unit types or applications with low operation levels; and (2) units which are meeting the emission limit and have sufficient monitoring requirements in place or are well controlled and for which the incremental control to meet the RACT emission limit is significantly more costly. Wisconsin has justified these exemptions based on cost-effectiveness. The technical support document found in the docket associated with this action has more details on the justification for these exemptions.

The one exemption not based on cost-effectiveness but rather on a technical basis is the exemption under rule NR 428.21(g) for a "gaseous fuel fired unit used to control VOC emissions". The primary consideration in design and operation of such an emissions unit is for the efficient destruction of VOC emissions and not to minimize NO_X emissions. For this reason this exemption is appropriate.

NR 428.22 "Emission limitation requirements" establishes NO_X emission rate limits by source category applicable to emission units operating above the applicability threshold. The source categories, operating levels, and emission limitations are presented in Table 1. The emission limits contained in the rule are a 30-day rolling average requirement applicable on a year-round basis. A unit subject to an emission limitation must demonstrate compliance on an individual basis by May 1, 2009. These limits are consistent with EPA guidance for the various categories for which Alternative Control Technology documents have been issued and with more recent State and Federal NO_X control programs.

TABLE 1—NO_X RACT CATEGORICAL EMISSION LIMITS [1]

Source category	Capacity threshold	NO_X emission limitation (30 day rolling average)
Solid Fuel-Fired Boiler	=>1000 mmBtu/hr	Tangential-fired, 0.10 lbs/mmBtu.
		Wall-fired, 0.10 lbs/mmBtu.
		Cyclone-fired, 0.10 lbs/mmBtu.
		Fluidized bed-fired, 0.10 lbs/mmBtu.
		Arch-fired, 0.18 lbs/mmBtu.
	=>500–999 mmBtu/hr	Tangential-fired, 0.15 lbs/mmBtu.
		Wall-fired (low heat release), 0.15 lbs/mmBtu.
		Wall-fired (high heat release), 0.17 lbs/mmBtu.
		Cyclone-fired, 0.15 lbs/mmBtu.
		Fluidized bed-fired, 0.10 lbs/mmBtu.
		Arch-fired, 0.18 lbs/mmBtu.
	=>250–495 mmBtu/hr	Tangential-fired, 0.15 lbs/mmBtu.
		Wall-fired (low heat release), 0.15 lbs/mmBtu.
		Wall-fired (high heat release), 0.17 lbs/mmBtu.
		Cyclone-fired, 0.15 lbs/mmBtu.
		Fluidized bed-fired, 0.10 lbs/mmBtu.
		Arch-fired, 0.18 lbs/mmBtu.
		Stoker-fired, 0.20 lbs/mmBtu.
	50–249 mmBtu/hr	Tangential-fired, 0.15 lbs/mmBtu.
		Wall-fired (low heat release), 0.15 lbs/mmBtu.
		Wall-fired (high heat release), 0.17 lbs/mmBtu.
		Cyclone-fired, 0.15 lbs/mmBtu.
		Fluidized bed-fired, 0.10 lbs/mmBtu.
		Arch-fired, 0.18 lbs/mmBtu.
		Stoker-fired, 0.25 lbs/mmBtu.
Gaseous or Liquid Fuel-Fired Boiler	=>100 mmBtu/hr	Gaseous fuel, 0.08 lbs/mmBtu.
	=>100 mmBtu/hr	Distillate oil, 0.10 lbs/mmBtu.
	=>65 mmBtu/hr	Residual or waste oil, 0.15 lbs/mmBtu.
Lime Kiln (manufacturing)	=>50 mmBtu/hr	Gaseous fuel, 0.10 lbs/mmBtu.
		Distillate oil, 0.12 lbs/mmBtu.
		Residual oil, 0.15 lbs/mmBtu.
		Coal, 0.60 lbs/mmBtu.
		Coke, 0.70 lbs/mmBtu.
Glass Furnace [2]	=>50 mmBtu/hr	2.0 lbs/ton of glass.
Metal Reheat, Galvanizing, and Annealing Furnace.	=>75 mmBtu/hr	0.08 lbs/mmBtu.
Asphalt Plants	=>65 mmBtu/hr	Gaseous fuel, 0.15 lbs/mmBtu.
		Distillate oil, 0.20 lbs/mmBtu.
		Residual or waste oil, 0.27 lbs/mmBtu.
Process Heating	=>100 mmBtu/hr	Gaseous fuel, 0.10 lbs/mmBtu.
	=>100 mmBtu/hr	Distillate oil, 0.12 lbs/mmBtu.
	=>65 mmBtu/hr	Residual or waste oil, 0.18 lbs/mmBtu.
Simple Cycle Combustion Turbine	=>50 MW	Natural gas, 25 ppmdv @ 15% O_2.
		Distillate oil, 65 ppmdv @ 15% O_2.
		Biologically derived fuel, 35 ppmdv @ 15% O_2.
	25–49 MW	Natural gas, 42 ppmdv @ 15% O_2.
		Distillate oil, 96 ppmdv @ 15% O_2.
		Biologically derived fuel, 35 ppmdv @ 15% O_2.
Combined Cycle Turbine	=>25 MW	Natural gas, 9 ppmdv @ 15% O_2.
		Distillate oil, l42 ppmdv @ 15% O_2.
	10–24 MW	Natural gas, 42 ppmdv @ 15% O_2.
		Distillate oil, 42 ppmdv @ 15% O_2.
	=>25 MW	Biologically derived fuel, 35 ppmdv @ 15% O_2.
Reciprocating Engine	=>500 horsepower	Rich-burn units, 3.0 gr/bhp-hr.

TABLE 1—NO_X RACT CATEGORICAL EMISSION LIMITS [1]—Continued

Source category	Capacity threshold	NO_X emission limitation (30 day rolling average)
		Lean-burn units, 3.0 gr/bhp-hr. Distillate-fuel units, 3.0 gr/bhp-hr. Natural Gas/Dual fuel, 3.0 gr/bhp-hr.

(1) The compliance deadline for most sources was May 1, 2009. However, electric generating units have interim emission limits and extended compliance time frames. See Table 2.

(2) During periods when the furnace is operating for purposes other than producing glass, NO_X emissions must be minimized.

For electric utility coal-fired boilers the rule sets a phased compliance schedule with interim emission limits for May 1, 2009 and final RACT emission limits by May 1, 2013. The purpose of the phased compliance schedule is to allow the electric utilities the necessary time to install post combustion controls while maintaining a reliable electric supply. Some control technologies, like selective catalytic reduction equipment, can take up to two years to install for an individual project. This is compounded by the fact that utilities are subject to limited installation windows that further restrict the installation schedule. On this basis, multiple installations cannot be fully accomplished on all electric utility boilers within the moderate nonattainment area by 2009. The schedule of phased limitations is provided in Table 2.

TABLE 2—COMPLIANCE SCHEDULE FOR ELECTRIC UTILITY COAL-FIRED BOILERS

Compliance date	Emission limits (lbs/mmbtu)	
	Coal-fired boilers >1000 mmbtu/hr	Coal-fired boilers >500 and <1000 mmbtu/hr
May 1, 2009	wall fired = 0.15	wall fired = 0.20.
	tangential fired = 0.15	tangential fired = 0.15.
	cyclone = 0.15	cyclone = 0.20.
	fluidized bed = 0.15	fluidized bed = 0.15.
	arch fired = 0.18	arch fired = 0.18.
May 1, 2013	wall fired = 0.10	wall fired = 0.17.
	tangential fired = 0.10	tangential fired = 0.15.
	cyclone = 0.10	cyclone = 0.15.
	fluidized bed = 0.10	fluidized bed =0.10.
	arch fired = 0.18	arch fired = 0.18.

The emission limits for 2009 reflect NO_X controls which can be installed within the intervening timeframe including combustion modifications and selective non-catalytic reduction systems. The final 2013 compliance date reflects the timing necessary for anticipated installations of selective catalytic reduction systems. The phased approach is also consistent with operating generating units on a system-wide basis and utilization of a multi-facility averaging program. In this manner, the phased emission limits set forth a RACT level of NO_X control across utilities boilers on a schedule which is expeditious as practicable.

Since the RACT emission limits are implemented on a schedule which is as expeditious as practicable the proposed phasing of electric utility boiler emission limits is acceptable.

NR 428.23 "Demonstrating compliance with emission limitations" requires most sources subject to emission limitations to demonstrate compliance using continuous emissions monitoring. For electric generating unit sources this monitoring is based on 40 CFR part 75 methods, and for industrial sources monitoring is based on 40 CFR part 60 methods. For a few source categories with low variability in operations or emission rates, compliance is demonstrated by periodic stack testing. The emission monitoring requirements are consistent with existing State and EPA programs. The rule will also allow a source to request approval of an alternative monitoring method. Any alternative monitoring method must be approved by both WDNR and EPA. These compliance methods are acceptable.

NR 428.24 "Record keeping and reporting" requires all affected unit owners and operators to maintain records and submit reports to the WDNR. These records and reports will be used to determine compliance, instances of noncompliance and also to determine if exempt units continue to remain exempt by staying below specific thresholds. These provisions are acceptable.

NR 428.25 "Alternative compliance methods and approaches" provides affected units with several compliance options:

1. Emissions from one or more units subject to a RACT emission limitation may be averaged with other similar units at an affected facility. Except for "new units", which are excluded from averaging, all similar units, both RACT and non-RACT affected units, at a facility must be included in the averaging program. This is to eliminate a potential shift in generation/production to any unit not subject to the RACT requirements.

2. Emissions averaging applies the current applicable emission limit of each unit on a heat input weighted basis to determine an average facility or system emission limit. EPA requires that averaging programs like the system averaging in the rule have an additional emission reduction applied to the facility or system emission limit as an environmental benefit in lieu of the provided flexibility. (See *Improving Air Quality with Economic Incentive Programs,* EPA–452/R–01–001, Jan. 2001.) Under facility averaging, the environmental benefit is the implementation of an annual and ozone season mass cap.

3. Emissions units may participate in an emission averaging program across multiple units and facilities. Each unit can only participate in one type of averaging program on an annual basis (facility or system-wide). The environmental benefit is the EPA default

of 10% reduction in the emission rate on an annual and an ozone season basis.

4. An individual source may request an alternative emission limitation or compliance schedule, with a determination made on a case-by-case basis by the WDNR. An alternative emission limit may be the result of an engineering assessment that demonstrates RACT controls are not economically or technically feasible for that unit. Any determination of an alternative limit or schedule must also account for a unit's ability to participate in either a facility or system-wide emissions averaging program. These alternative RACT determinations must also have written EPA approval.

As mentioned above, these alternative compliance methods must meet the requirements found in EPA's Economic Incentive Policy or guidance (*Improving Air Quality with Economic Incentive Programs,* EPA–452/R–01–001, Jan. 2001).

Rule 428.25(3) allows sources that are subject to CAIR under 40 CFR Part 97 to demonstrate compliance with NO_X RACT requirements by complying with CAIR requirements. EPA is not acting on this portion of Wisconsin's rules. At the time these rules were adopted, EPA guidance allowed approval of these provisions. On December 23, 2008, the D.C. Circuit Court remanded CAIR to the EPA. Until EPA issues a replacement rule for CAIR, EPA cannot approve any NO_X RACT rules making a claim of "CAIR equals RACT." Once a replacement rule for CAIR is issued, EPA can revisit the "CAIR equals RACT" provisions and evaluate them for approvability.

NR 428.26 "Utility reliability waiver " contains a provision that allows an electric or steam utility or natural gas transmission facility to request a waiver from an applicable emission limit for a period of time due to reliability issues. This provision acknowledges that these facilities serve non-interruptible customers and uncontrollable events may occur which result in an increase in emissions. Facilities generating steam for process and manufacturing purposes are not eligible for the waiver.

Non-RACT Portion of June 12, 2007 and September 14, 2009 Submittals

A number of NO_X regulations were approved into the Wisconsin SIP on November 13, 2001 (66 FR 56931). They were approved as part of fulfilling the reasonable further progress requirements for the Milwaukee-Racine and Sheboygan County 1-hour ozone nonattainment areas. Proposed changes to these "non-RACT" portions of ch. NR 428 are as follows.

NR 428.02 "Definitions" adds the definition of "process heater," rule NR 428.02(7e). This addition is acceptable.

NR 428.04(2)(h)1. and 2., 428.05(3)(e)1. to 4, have been corrected to use the units of "grams per brake horsepower-hour" from "grams per brake horsepower." These corrections are acceptable.

The revision avoids triggering new source NO_X limits under ch. NR 428.04 when the modification is made solely to comply with existing source NO_X control requirements under rules NR 428.05 or 428.22. This modification does not alter the original intended emission limitation of the rule and therefore is acceptable.

The revisions make a number of clarifications and simplifications to the monitoring and reporting requirements under 428.23(1)(b)1., 428.23(1)(b)9, and 428.24(1)(b)(intro.). These changes are not substantive in nature nor do they eliminate dual requirements. Therefore these modifications are acceptable.

The applicability statement in rule NR 428.05(1) is being revised to remove the reference to "modified" sources. The use of the term "modified" in this case identified a source modified before February 1, 2001 as an existing source. Some inferred this meant a source existing prior to that date but modified afterwards is not subject to an emission limit. The applicability language is altered to clearly identify units subject to an existing source emission limitation. This correction is acceptable.

IV. Proposed Action

EPA is proposing to approve revisions to the Wisconsin SIP submitted on June 12, 2007 and September 14, 2009. These revisions incorporate provisions related to the implementation of NO_X RACT for major sources in the Milwaukee-Racine and Sheboygan ozone nonattainment areas. The only rule that EPA is not acting on in the Wisconsin submittals is the "CAIR equals RACT" provision found in 428.25(3). This rule is separable from the rest of the NO_X RACT rules and the rest of the submittal will not be affected if this rule is not acted on.

The SIP revisions that EPA is proposing to approve address the requirements found in section 182(f) of the CAA.

V. Statutory and Executive Order Reviews

Under the CAA, the Administrator is required to approve a SIP submission that complies with the provisions of the CAA and applicable Federal regulations. 42 U.S.C. 7410(k); 40 CFR 52.02(a). Thus, in reviewing SIP submissions, EPA's role is to approve State choices, provided that they meet the criteria of the CAA. Accordingly, this action merely approves State law as meeting Federal requirements and does not impose additional requirements beyond those imposed by State law. For that reason, this action:

- Is not a "significant regulatory action" subject to review by the Office of Management and Budget under Executive Order 12866 (58 FR 51735, October 4, 1993);
- Does not impose an information collection burden under the provisions of the Paperwork Reduction Act (44 U.S.C. 3501 *et seq.*);
- Is certified as not having a significant economic impact on a substantial number of small entities under the Regulatory Flexibility Act (5 U.S.C. 601 *et seq.*);
- Does not contain any unfunded mandate or significantly or uniquely affect small governments, as described in the Unfunded Mandates Reform Act of 1995 (Pub. L. 104–4);
- Does not have Federalism implications as specified in Executive Order 13132 (64 FR 43255, August 10, 1999);
- Is not an economically significant regulatory action based on health or safety risks subject to Executive Order 13045 (62 FR 19885, April 23, 1997);
- Is not a significant regulatory action subject to Executive Order 13211 (66 FR 28355, May 22, 2001);
- Is not subject to requirements of Section 12(d) of the National Technology Transfer and Advancement Act of 1995 (15 U.S.C. 272 note) because application of those requirements would be inconsistent with the Clean Air Act; and
- Does not provide EPA with the discretionary authority to address, as appropriate, disproportionate human health or environmental effects, using practicable and legally permissible methods, under Executive Order 12898 (59 FR 7629, February 16, 1994).

In addition, this rule does not have tribal implications as specified by Executive Order 13175 (65 FR 67249, November 9, 2000), because the SIP is not approved to apply in Indian country located in the State, and EPA notes that it will not impose substantial direct costs on tribal governments or preempt tribal law.

List of Subjects in 40 CFR part 52

Environmental protection, Air pollution control, Electric utilities, Intergovernmental relations, Nitrogen oxides, Ozone, Particulate matter, Reporting and recordkeeping requirements, Sulfur dioxide.

Dated: March 11, 2010.

Walter W. Kovalick, Jr.,

Acting Regional Administrator, Region 5.

[FR Doc. 2010–6519 Filed 3–23–10; 8:45 am]

BILLING CODE 6560–50–P

Notices

Federal Register

Vol. 75, No. 56

Wednesday, March 24, 2010

This section of the FEDERAL REGISTER contains documents other than rules or proposed rules that are applicable to the public. Notices of hearings and investigations, committee meetings, agency decisions and rulings, delegations of authority, filing of petitions and applications and agency statements of organization and functions are examples of documents appearing in this section.

DEPARTMENT OF AGRICULTURE

Submission for OMB Review; Comment Request

March 18, 2010.

The Department of Agriculture has submitted the following information collection requirement(s) to OMB for review and clearance under the Paperwork Reduction Act of 1995, Public Law 104–13. Comments regarding (a) whether the collection of information is necessary for the proper performance of the functions of the agency, including whether the information will have practical utility; (b) the accuracy of the agency's estimate of burden including the validity of the methodology and assumptions used; (c) ways to enhance the quality, utility and clarity of the information to be collected; (d) ways to minimize the burden of the collection of information on those who are to respond, including through the use of appropriate automated, electronic, mechanical, or other technological collection techniques or other forms of information technology should be addressed to: Desk Officer for Agriculture, Office of Information and Regulatory Affairs, Office of Management and Budget (OMB), *OIRA_Submission@OMB.EOP.GOV* or fax (202) 395–5806 and to Departmental Clearance Office, USDA, OCIO, Mail Stop 7602, Washington, DC 20250–7602. Comments regarding these information collections are best assured of having their full effect if received within 30 days of this notification. Copies of the submission(s) may be obtained by calling (202) 720–8958.

An agency may not conduct or sponsor a collection of information unless the collection of information displays a currently valid OMB control number and the agency informs potential persons who are to respond to the collection of information that such persons are not required to respond to the collection of information unless it displays a currently valid OMB control number.

Animal & Plant Health Inspection Service

Title: Phytosanitary Certificates for Imported Articles to Prevent Introduction of Potato Brown Rot.

OMB Control Number: 0579–0221.

Summary of Collection: Under the Plant Protection Act (7 U.S.C. 7701–7772), the Secretary of Agriculture is authorized to prohibit or restrict the importation, entry or movement of plants and plant pest to prevent the introduction of plant pest into the United States. The regulations in 7 CFR Part 319 include a certification program for articles of Pelargonium spp. and Solanum spp. imported from countries where the bacterium Ralstonia solanacearum race 3 biovar 2 is known to occur. This bacterial strain causes potato brown rot, which causes potatoes to rot through, making them unusable and seriously affecting potato yields.

Need and Use of the Information: The Animal Plant and Health Inspection Service (APHIS) requires the collection of information through a phytosanitary certificate (foreign), trust funds, and compliance agreements. If the information is not collected, potato fields could become infected with the strain of *R. solanacearum* and this could drastically reduce or eliminate potato fields.

Description of Respondents: Business or other for-profit; Federal Government.

Number of Respondents: 27.

Frequency of Responses: Reporting: On occasion.

Total Burden Hours: 1,022.

Animal and Plant Health Inspection Service

Title: Importation of Fruits and Vegetables.

OMB Control Number: 0579–0316.

Summary of Collection: Under the Plant Protection Act (7 U.S.C. 7701 *et.seq.*), the Secretary of Agriculture is authorized to carry out operations or measures to detect, eradicate, suppress, control, prevent, or retard the spread of plant pest not known to be widely distributed throughout the United States. The regulations contained in Title 7 of the Code of Federal Regulations, Part 319 (Subpart Fruits and Vegetables), Sections 319.56 through 319.56–48 implement the intent of the Act by prohibiting or restricting the importation of certain fruits and vegetables into the United States from certain parts of the world to prevent the introduction and dissemination of fruit flies and other injurious plant pests that are new to the United States or not widely distributed within the United States.

Need and Use of the Information: The Animal and Plant Health Inspection Service (APHIS) will collect information using PPQ form 587, "Permit Application; Phytosanitary Certificate, Inspections, Records, Labeling and Trapping. If APHIS did not collect this information, the effectiveness of its Import Regulations would be severely compromised, likely resulting in the introduction of a number of destructive agricultural pests into the United States.

Description of Respondents: Business or other for-profit; Federal Government.

Number of Respondents: 2,959.

Frequency of Responses: Recordkeeping; Reporting: On occasion.

Total Burden Hours: 124,779.

Animal and Plant Health Inspection Service

Title: Viruses, Serums, Toxins, and Analogous Products; Suspension, Revocation, or Termination of Biological Licenses or Permits.

OMB Control Number: 0579–0318.

Summary of Collection: The Virus-Serum-Toxin Act (37 Stat. 832–833, 21 U.S.C. 151–159) gives the United States Department of Agriculture (USDA) the authority to promulgate regulations designed to prevent the importation, preparation, sale, or shipment of harmful veterinary biological products. A veterinary biological product is defined as all viruses, serums, toxins, and analogous product of natural or synthetic origin (such as vaccines, antitoxins, or the immunizing components of microorganisms intended for the diagnosis, treatment, or prevention of diseases in domestic animals). Under the Animal and Plant Health Inspection Service's (APHIS) regulations in section 105.3(a), the Center for Veterinary Biologics may notify a licensee or permittee to stop the preparation, sale, barter, exchange, shipment, or importation of any biological product if, at any time, it appears that such product may be dangerous in the treatment of domestic animals.

Need and Use of the Information: The licensee or permittee upon receiving

notification from APHIS must immediately send stop distribution and sale notifications to all persons known to have such veterinary biologic in their possession and account for the remaining quantity of each serial or subserial of any such veterinary biologic at each location in the distribution channel known to the licensee or permittee. Failing to require the information from licensees and permittees could result in the continued use of veterinary biological products that are ineffective or harmful to animals.

Description of Respondents: Business or other for-profit.

Number of Respondents: 55.

Frequency of Responses: Reporting: On occasion.

Total Burden Hours: 106.

Ruth Brown,

Departmental Information Collection Clearance Officer.

[FR Doc. 2010–6386 Filed 3–23–10; 8:45 am]

BILLING CODE 3410–34–P

DEPARTMENT OF AGRICULTURE

Rural Utilities Service

Information Collection Activity; Comment Request

AGENCY: Rural Utilities Service, USDA.

ACTION: Notice and request for comments.

SUMMARY: In accordance with the Paperwork Reduction Act of 1995 (44 U.S.C. Chapter 35, as amended), the Rural Utilities Service (RUS) invites comments on this information collection for which approval from the Office of Management and Budget (OMB) will be requested.

DATES: Comments on this notice must be received by May 24, 2010.

FOR FURTHER INFORMATION CONTACT: Thomas P. Dickson, Deputy Director, Program Development and Regulatory Analysis, USDA RUS, 1400 Independence Ave., SW., STOP 1522, Room 5158 South Building, Washington, DC 20250–1522. Telephone: (202) 690–4492. FAX: (202) 720–8435. E-mail: *thomas.dickson@wdc.usda.gov.*

SUPPLEMENTARY INFORMATION: The Office of Management and Budget's (OMB) regulation (5 CFR 1320) implementing provisions of the Paperwork Reduction Act of 1995 (Pub. L. 104–13) requires that interested members of the public and affected agencies have an opportunity to comment on information collection and recordkeeping activities (*see* 5 CFR 1320.8(d)). This notice identifies an information collection that will be submitted to OMB for extension.

Comments are invited on: (a) Whether the proposed collection of information is necessary for the proper performance of the functions of the Agency, including whether the information will have practical utility; (b) the accuracy of the Agency's estimate of the burden of the proposed collection of information including the validity of the methodology and assumptions used; (c) ways to enhance the quality, utility and clarity of the information to be collected; and (d) ways to minimize the burden of the collection of information on those who are to respond, including through the use of appropriate automated, electronic, mechanical, or other technological collection techniques or other forms of information technology. Comments may be sent to: Michele Brooks, Director, Program Development and Regulatory Analysis, USDA RUS, STOP 1522, 1400 Independence Ave., SW., Washington, DC 20250–1522. FAX: (202) 720–8435.

Title: Servicing of Water Programs Loans and Grants.

OMB Control Number: 0572–0137.

Type of Request: Extension of a currently approved information collection.

Abstract: RUS' Water and Environmental Programs (WEP) provide financing and technical assistance for development and operation of safe and affordable water supply systems and sewage and other waste disposal facilities. WEP provides loans, guaranteed loans and grants for water, sewer, storm water, and solid waste disposal facilities in rural areas and towns of up to 10,000 people. The recipients of the assistance covered by 7 CFR part 1782 must be public entities. These can include municipalities, counties, special purpose districts; federally designated Indian tribes, land corporations not operated for profit, including cooperatives. The information, which is for the most part financial in nature, is needed by the Agency to determine if borrowers, based on their individual situations, qualify for the various servicing options.

Estimate of Burden: Public reporting for this collection of information is estimated to average 1.22 hours per response.

Respondents: Business or other for profit and non-profit institutions, and state and local governments.

Estimated Number of Respondents: 493.

Estimated Number of Responses per Respondent: 1.

Estimated Total Annual Burden on Respondents: 641 hours.

Copies of this information collection can be obtained from Thomas P. Dickson, Program Development and Regulatory Analysis, at (202) 690–4492. FAX: (202) 720–8435. E-mail: *thomas.dickson@wdc.usda.gov.*

All responses to this notice will be summarized and included in the request for OMB approval. All comments will also become a matter of public record.

Dated: March 18, 2010.

Jonathan Adelstein,

Administrator, Rural Utilities Service.

[FR Doc. 2010–6426 Filed 3–23–10; 8:45 am]

BILLING CODE P

DEPARTMENT OF AGRICULTURE

Forest Service

Ravalli County Resource Advisory Committee

AGENCY: Forest Service, USDA.

ACTION: Notice of meeting.

SUMMARY: The Ravalli County Resource Advisory Committee will meet in Hamilton, Montana. The purpose of the meeting is to discuss upcoming projects.

DATES: The meeting will be held March 23, 2010.

ADDRESSES: The meeting will be held at 1801 N. First Street. Written comments should be sent to Stevensville Rd., 88 Main Street, Stevensville, MT 59870. Comments may also be sent via e-mail to *dritter@fs.fed.us* or via facsimile to 406–777–5461. All comments, including names and addresses when provided, are placed in the record and are available for public inspection and copying. The public may inspect comments received at 88 Main Street, Stevensville, MT. Visitors are encouraged to call ahead to 406–777–5461 to facilitate entry into the building.

FOR FURTHER INFORMATION CONTACT: Daniel G Ritter, District Ranger, Nancy Trotter, Coordinator. Individuals who use telecommunication devices for the deaf (TDD) may call the Federal Information Relay Service (FIRS) at 1–800–877–8339 between 8 a.m. and 8 p.m., Eastern Standard Time, Monday through Friday.

SUPPLEMENTARY INFORMATION: The meeting is open to the public. Council discussion is limited to Forest Service staff and Council members. However, persons who wish to bring pertinent matters to the attention of the Council may file written statements with the Council staff before or after the meeting. Public input sessions will be provided

and individuals who made written requests by March 15, 2010 will have the opportunity to address the Council at those sessions.

Dated: March 15, 2010.

Julie K. King,

Forest Supervisor.

[FR Doc. 2010–6273 Filed 3–23–10; 8:45 am]

BILLING CODE M

COMMISSION ON CIVIL RIGHTS

Agenda and Notice of Public Meeting of the Missouri Advisory Committee

Notice is hereby given, pursuant to the provisions of the rules and regulations of the U.S. Commission on Civil Rights (Commission), and the Federal Advisory Committee Act (FACA), that a planning meeting of the Missouri Advisory Committee to the Commission will convene by conference call at 1:30 p.m. and adjourn at approximately 2:30 p.m. on Tuesday, March 23, 2010. The purpose of this meeting is to plan St. Louis public briefing meeting.

This meeting is available to the public through the following toll-free call-in number: (866) 364–7584, conference call access code number 58903181. Any interested member of the public may call this number and listen to the meeting. Callers can expect to incur charges for calls they initiate over wireless lines, and the Commission will not refund any incurred charges. Callers will incur no charge for calls they initiate over land-line connections to the toll-free telephone number. Persons with hearing impairments may also follow the proceedings by first calling the Federal Relay Service at 1–800–977–8339 and providing the Service with the conference call number and contact name Farella E. Robinson.

To ensure that the Commission secures an appropriate number of lines for the public, persons are asked to register by contacting Corrine Sanders of the Central Regional Office and TTY/TDD telephone number, by 4 p.m. on March 16, 2010.

Members of the public are entitled to submit written comments. The comments must be received in the regional office by April 6, 2010. The address is U.S. Commission on Civil Rights, 400 State Avenue, Suite 908, Kansas City, Kansas 66101. Comments may be e-mailed to *frobinson@usccr.gov*. Records generated by this meeting may be inspected and reproduced at the Central Regional Office, as they become available, both before and after the meeting. Persons interested in the work of this advisory committee are advised to go to the Commission's Web site, *http://www.usccr.gov,* or to contact the Central Regional Office at the above e-mail or street address.

The meeting will be conducted pursuant to the provisions of the rules and regulations of the Commission and FACA.

Dated in Washington, DC, March 18, 2010.

Peter Minarik,

Acting Chief, Regional Programs Coordination Unit.

[FR Doc. 2010–6382 Filed 3–23–10; 8:45 am]

BILLING CODE 6335–01–P

DEPARTMENT OF COMMERCE

Submission for OMB Review; Comment Request

The Department of Commerce will submit to the Office of Management and Budget (OMB) for clearance the following proposal for collection of information under the provisions of the Paperwork Reduction Act (44 U.S.C. Chapter 35).

Agency: Office of the Secretary, Office of Acquisition Management.

Title: Applicant for Funding Assistance.

OMB Control Number: 0605–0001.

Form Number(s): CD–346.

Type of Request: Regular submission.

Number of Respondents: 1,500.

Average Hours Per Response: 15 minutes.

Burden Hours: 375.

Needs and Uses: The Department of Commerce, thru its bureaus, assists reliable, capable individuals and firms in pursuit of various business development projects, business enterprise development and other forms of economic development. The CD–346 is used to assist programs and grants administration officials in determining the fiscal responsibility and financial integrity of principal officers and employees of organizations, firms, and other entities which are recipients or beneficiaries of grants, cooperative agreements, loans, loan guarantees or other forms of federal financial assistance.

Through the name check process, background information is collected on key individuals associated with proposed financial assistance recipient organizations. It also identifies those principals who have been convicted of, or are presently facing, criminal charges or are under investigation for fraud, theft, perjury or other matters which have significant impact on questions of management honesty or financial integrity.

The Office of Inspector General has passed the responsibility for administration of the name check process and stewardship of the Form CD–346 to the Office of Acquisition Management (OAM), Grants Management Division (GMD).

Affected Public: Business or other for-profit organizations; not-for-profit institutions; individuals and households.

Frequency: On occasion.

Respondent's Obligation: Obtain or retain benefits.

OMB Desk Officer: Nicholas Fraser, (202) 395–5887.

Copies of the above information collection proposal can be obtained by calling or writing Diana Hynek, Departmental Paperwork Clearance Officer, (202) 482–0266, Department of Commerce, Room 6625, 14th and Constitution Avenue, NW., Washington, DC 20230 (or via the Internet at *dHynek@doc.gov*).

Written comments and recommendations for the proposed information collection should be sent within 30 days of publication of this notice to Nicholas Fraser, OMB Desk Officer, FAX number (202) 395–7285, or via the Internet at *Nicholas_A._Fraser@omb.eop.gov.*

Dated: March 18, 2010.

Gwellnar Banks,

Management Analyst, Office of the Chief Information Officer.

[FR Doc. 2010–6388 Filed 3–23–10; 8:45 am]

BILLING CODE 3510–03–P

DEPARTMENT OF COMMERCE

Submission for OMB Review; Comment Request

The Department of Commerce will submit to the Office of Management and Budget (OMB) for clearance the following proposal for collection of information under the provisions of the Paperwork Reduction Act (44 U.S.C. Chapter 35).

Agency: International Trade Administration (ITA).

Title: Certified Trade Mission: Application for Status.

OMB Control Number: 0625–0215.

Form Number(s): ITA–4127P.

Type of Request: Regular submission.

Burden Hours: 60.

Number of Respondents: 60.

Average Hours Per Response: 1.

Needs and Uses: Certified Trade Missions are overseas events that are planned, organized and led by both Federal and non-Federal government

export promotion agencies such as industry trade associations, agencies of state and local governments, chambers of commerce, regional groups and other export-oriented groups. The Certified Trade Mission-Application for Status form is the vehicle by which individual firms apply, and if accepted, agree to participate in the Department of Commerce's (DOC) trade promotion events program, identify the products or services they intend to sell or promote, and record their required participation fees.

The form is used to:

(1) Collect information about the products/services that a company wishes to export;

(2) evaluate applicants' mission goals and the marketability of product categories/industry in the local market; and

(3) develop appropriate meeting schedules for clients.

Affected Public: Business or other for profit organizations, not-for-profit institutions.

Frequency: On occasion.

Respondent's Obligation: Required to obtain or retain a benefit.

OMB Desk Officer: Wendy L. Liberante, Phone (202) 395–3647.

Copies of the above information collection proposal can be obtained by calling or writing Diana Hynek, Departmental Paperwork Clearance Officer, (202) 482–0266, Department of Commerce, Room 6625, 14th and Constitution Avenue, NW., Washington, DC 20230 (or via the Internet at *dHynek@doc.gov*).

Written comments and recommendations for the proposed information collection should be sent within 30 days of publication of this notice to Wendy L. Liberante, OMB Desk Officer, FAX number (202) 395–7285 or via the Internet at *Wendy_L._Liberante@omb.eop.gov.*

Dated: March 19, 2010.

Gwellnar Banks,

Management Analyst, Office of the Chief Information Officer.

[FR Doc. 2010–6522 Filed 3–23–10; 8:45 am]

BILLING CODE 3510–FP–P

DEPARTMENT OF COMMERCE

International Trade Administration

[A–580–855]

Amended Final Determination of Sales at Less Than Fair Value: Diamond Sawblades and Parts Thereof From the Republic of Korea

AGENCY: Import Administration, International Trade Administration, Department of Commerce.

DATES: *Effective Date:* March 24, 2010.

FOR FURTHER INFORMATION CONTACT: David Layton or Brandon Farlander, Import Administration, International Trade Administration, U.S. Department of Commerce, 14th Street and Constitution Avenue, NW., Washington, DC 20230; telephone: (202) 482–0371 or (202) 482–0182, respectively.

SUPPLEMENTARY INFORMATION:

Amendment to Final Determination

In accordance with sections 735(a) and 777(i)(1) of the Tariff Act of 1930, as amended (the Act), on May 22, 2006, the Department of Commerce ("the Department") published its notice of final determination of sales at less than fair value ("LTFV") in the investigation of diamond sawblades and parts thereof ("DSB") from the Republic of Korea ("Korea"). *See Notice of Final Determination of Sales at Less Than Fair Value and Final Determination of Critical Circumstances: Diamond Sawblades and Parts Thereof from the Republic of Korea,* 71 FR 29310 (May 22, 2006) ("*Final Determination*"). On May 24, 2006, we received allegations, timely filed pursuant to 19 CFR 351.224(c)(2), from Ehwa Diamond Industrial Co., Ltd. ("Ehwa") and Shinhan Diamond Industrial Co., Ltd. ("Shinhan") that the Department made ministerial errors with respect to its final determination dumping margin calculations.

A ministerial error, as defined in section 751(h) of the Act, includes "errors in addition, subtraction, or other arithmetic function, clerical errors resulting from inaccurate copying, duplication, or the like, and any other type of unintentional error which the (Secretary) considers ministerial." *See also* 19 CFR 351.224(f). After analyzing Ehwa and Shinhan's submissions, we determined, in accordance with 19 CFR 351.224(e), that we inadvertently failed to grant Ehwa and Shinhan a constructed export price offset. Our correction of these errors results in revised margins for Ehwa and Shinhan. We have revised the calculation of the "All Others" rate accordingly.

The Department provides a detailed discussion of all ministerial errors alleged by Ehwa and Shinhan, as well as the Department's analysis in the June 28, 2006, memorandum from the team to Thomas F. Futtner, Acting Office Director, entitled, "Ministerial Error Allegations in the Final Determination of the Antidumping Duty Investigation on Diamond Sawblades and Parts Thereof from the Republic of Korea" ("June 28, 2006 Ministerial Errors Memo").

During the original investigation, the U.S. International Trade Commission ("ITC") published its final determination that an industry in the United States was not materially injured or threatened with material injury by reason of imports of DSB from the People's Republic of China ("PRC") and Korea.[1] Therefore, with regard to DSB from Korea, the Department did not publish an amended final determination reflecting its ministerial error findings. Subsequently, the petitioners challenged the ITC's final negative injury determination, and on February 6, 2008, the U.S. Court of International Trade ("CIT") remanded the determination to the ITC for reconsideration.[2] Upon remand, the ITC changed its determination and found that a U.S. industry is threatened with material injury by reason of imports of DSB from the PRC and Korea.[3]

On November 4, 2009, the Department published antidumping duty orders and ordered the collection of cash deposits on subject merchandise covered by the orders. *See Diamond Sawblades and Parts Thereof From the People's Republic of China and the Republic of Korea: Antidumping Duty Orders,* 74 FR 57145 (November 4, 2009) ("*DSB Orders*"). Because the Department had not yet published an amended final determination based on the recommendations of its June 28, 2006 Ministerial Errors Memo, the Department applied cash deposit rates from the *Final Determination* in the *DSB Orders.* The Department provides a complete description of the sequence of events leading up to the issuance of the orders in the *DSB Orders* with references provided for the relevant decisions and notices issued by the ITC, the Department, and the CIT.

[1] *See Diamond Sawblades and Parts Thereof From China and Korea,* 71 FR 39128 (July 11, 2006) ("*ITC Final Determination*").

[2] *See Diamond Sawblades Mfr's Coalition* v. *United States,* No. 06–247, Slip Op. 2008–18 (CIT February 6, 2008).

[3] *See Diamond Sawblades and Parts Thereof from China and Korea:* Investigation Nos. 731–TA–1092 and 1093 (Final)(Remand), USITC Pub. 4007 (May 2008).

In accordance with the Department's findings in the June 28, 2006 Ministerial Errors Memo and 19 CFR 351.224(e), we are amending the *Final Determination.* The revised weighted-average dumping margins are as follows:

Manufacturer/exporter	Final determination weighted average margin percentage	Amended weighted average margin percentage
Ehwa	12.76	8.80
Shinhan	26.55	16.88
Hyosung Diamond Industrial Co	6.43	6.43
All Others	16.39	11.10

Continuation of Suspension of Liquidation

In accordance with section 735(c)(1)(B) of the Act, we are directing U.S. Customs and Border Protection ("CBP") to continue to suspend liquidation of all entries of DSB from Korea. CBP shall require a cash deposit equal to the estimated amount by which the normal value exceeds the U.S. price as indicated in the "amended weighted-average margin percentage" column in the chart above. These instructions suspending liquidation will remain in effect until further notice. We will issue separate instructions to CBP authorizing it to refund the antidumping duty deposits that Ehwa and Shinhan made in excess of the respective amended antidumping duty margins for these manufacturer/exporters since January 23, 2009, the effective date for suspension of liquidation under the *DSB Orders.* We will also issue instructions to CBP authorizing it to refund the antidumping duty deposits companies subject to the all-others rate made in excess of the amended All Others rate since January 23, 2009.

Critical Circumstances

In the *Final Determination,* the Department determined that critical circumstances existed with respect to Shinhan and the "All Others" rate. On July 11, 2006, the ITC published its final determination that an industry in the United States was not materially injured or threatened with material injury by reason of imports of DSB from the PRC and Korea.[4] Pursuant to the ITC's original final determination, the Department instructed CBP to lift suspension of liquidation on all entries subject to the investigation. Accordingly, all entries of subject merchandise, including those entered 90 days before the imposition of provisional measures, were liquidated and the issue of critical circumstances is moot.

[4] *See ITC Final Determination.*

This amended determination is issued and published pursuant to section 735(d) of the Act.

Dated: March 18, 2010.

Ronald K. Lorentzen,

Deputy Assistant Secretary for Import Administration.

[FR Doc. 2010–6530 Filed 3–23–10; 8:45 am]

BILLING CODE 3510–DS–P

DEPARTMENT OF COMMERCE

Foreign–Trade Zones Board

[Docket 18–2010]

Foreign–Trade Zone 196 -- Fort Worth, Texas, Application for Reorganization/ Expansion under Alternative Site Framework

An application has been submitted to the Foreign–Trade Zones (FTZ) Board (the Board) by the Alliance Corridor, Inc., grantee of FTZ 196, requesting authority to reorganize the zone under the alternative site framework (ASF) adopted by the Board (74 FR 1170, 1/12/09; correction 74 FR 3987, 1/22/09). The ASF is an option for grantees for the establishment or reorganization of general–purpose zones and can permit significantly greater flexibility in the designation of new "usage–driven" FTZ sites for operators/users located within a grantee's "service area" in the context of the Board's standard 2,000–acre activation limit for a general–purpose zone project. The application was submitted pursuant to the Foreign–Trade Zones Act, as amended (19 U.S.C. 81a–81u), and the regulations of the Board (15 CFR part 400). It was formally filed on March 16, 2010.

FTZ 196 was approved by the Board on August 31, 1993 (Board Order 651, 58 FR 48826, 9/20/93). The current zone project includes the following sites: *Site 1* (4,470 acres) -- Alliance Center, located at the Alliance Airport on Interstate 35W in the Cities of Fort Worth and Haslet; *Site 2* (1,900 acres) -- Alliance Gateway, located along State Highway 170 between Interstate 35W and State Highway 114, Fort Worth and Roanoke; *Site 3* (1,600 acres) -- located at Interstate 35W and State Highway 114 in Northlake; and, *Site 4* (1,600 acres) -- Hunter Ranch, located on Interstate 35W in Denton.

The grantee's proposed service area under the ASF would be the Alliance Corridor area located within Denton and Tarrant Counties, Texas (as detailed in the application). If approved, the grantee would be able to serve sites throughout the service area based on companies' needs for FTZ designation. The proposed service area is adjacent to the Alliance Customs and Border Protection user fee airport.

The applicant is requesting to include its current sites in the reorganized zone as "magnet'' sites. The applicant proposes that Site 1 be exempt from "sunset" time limits that would otherwise apply to sites under the ASF. The applicant is also requesting approval of a "usage–driven" site in Denton County: Proposed Site 5 (39 acres) -- Lego Systems, Inc., 300 Freedom Drive, Roanoke (located within Alliance Gateway 60).

In accordance with the Board's regulations, Camille Evans of the FTZ Staff is designated examiner to evaluate and analyze the facts and information presented in the application and case record and to report findings and recommendations to the Board.

Public comment is invited from interested parties. Submissions (original and 3 copies) shall be addressed to the Board's Executive Secretary at the address below. The closing period for their receipt is May 24, 2010. Rebuttal comments in response to material submitted during the foregoing period may be submitted during the subsequent 15-day period to June 7, 2010.

A copy of the application will be available for public inspection at the Office of the Executive Secretary, Foreign–Trade Zones Board, Room 2111, U.S. Department of Commerce, 1401 Constitution Avenue NW, Washington, DC 20230–0002, and in the "Reading Room" section of the Board's website, which is accessible via

www.trade.gov/ftz. For further information, contact Camille Evans at Camille.Evans@trade.gov or (202) 482–2350.

Dated: March 16, 2010.

Andrew McGilvray,

Executive Secretary.

[FR Doc. 2010–6521 Filed 3–23–10; 8:45 am]

BILLING CODE 3510–DS–S

DEPARTMENT OF COMMERCE

Foreign–Trade Zones Board

[Order No. 1669]

Approval for Manufacturing Authority, Foreign–Trade Zone 7, CooperVision Caribbean Corporation (Contact Lenses), Juana Diaz, Puerto Rico

Pursuant to its authority under the Foreign–Trade Zones Act of June 18, 1934, as amended (19 U.S.C. 81a–81u), the Foreign–Trade Zones Board (the Board) adopts the following Order:

Whereas, the Puerto Rico Industrial Development Company, grantee of Foreign–Trade Zone 7, has requested manufacturing authority on behalf of CooperVision Caribbean Corporation, within FTZ 7 in Juana Diaz, Puerto Rico (FTZ Docket 24–2009, filed 6–26–2009);

Whereas, notice inviting public comment has been given in the **Federal Register** (74 FR 31912, 7–6–2009) and the application has been processed pursuant to the FTZ Act and the Board's regulations; and,

Whereas, the Board adopts the findings and recommendations of the examiner's report, and finds that the requirements of the FTZ Act and Board's regulations are satisfied, and that the proposal is in the public interest;

Now, therefore, the Board hereby orders:

The application for manufacturing authority under zone procedures within FTZ 7 on behalf of CooperVision Caribbean Corporation, as described in the application and **Federal Register** notice, is approved, subject to the FTZ Act and the Board's regulations, including Section 400.28.

Signed at Washington, DC, this 12th day of March 2010.

Ronald K. Lorentzen,

Deputy Assistant Secretary for Import Administration, Alternate Chairman, Foreign–Trade Zones Board.

Attest:

Andrew McGilvray,

Executive Secretary.

[FR Doc. 2010–6501 Filed 3–23–10; 8:45 am]

BILLING CODE 3510–DS–S

DEPARTMENT OF COMMERCE

National Institute of Standards and Technology

[Docket Number: 100311136–0140–01]

Center for Nanoscale Science and Technology Postdoctoral Researcher and Visiting Fellow Measurement Science and Engineering Program; Availability of Funds

AGENCY: National Institute of Standards and Technology (NIST), Commerce.

ACTION: Notice.

SUMMARY: The National Institute of Standards and Technology (NIST) Center for Nanoscale Science and Technology (CNST) is establishing a financial assistance program for awardees to develop and implement with the CNST a Postdoctoral Researcher and Visiting Fellow Measurement Science and Engineering Program. This program is intended to promote research, training, and practical experience in nanoscale science and technology on-site at the CNST, and to advance the CNST's mission to support the development of nanotechnology through research on measurement and fabrication methods, standards and technology, and by operating a state-of-the-art nanofabrication facility, the NanoFab.

DATES: All applications must be received no later than 5 p.m. Eastern Daylight Savings Time on Friday, April 30, 2010. Please see "Application Submission Information" for more information.

ADDRESSES: Paper copies of full proposals must be submitted to the address below. Paper submissions require an original and two copies: Donna Lauren; Center for Nanoscale Science and Technology; National Institute of Standards and Technology; 100 Bureau Drive, Stop 6200; Gaithersburg, Maryland 20899–6200. Electronic submissions of full proposals must be submitted to: *http://www.grants.gov.*

FOR FURTHER INFORMATION CONTACT: Donna Lauren, Center for Nanoscale Science and Technology, National Institute of Standards and Technology, 100 Bureau Drive, Stop 6200, Gaithersburg, Maryland 20899–6200. Tel (301) 975–3729, E-Mail: *donna.lauren@nist.gov.*

SUPPLEMENTARY INFORMATION:

Electronic access: Applicants are strongly encouraged to read the Federal Funding Opportunity (FFO) available at *http://www.grants.gov/* for complete information about this program, all program requirements, and instructions for applying by paper or electronically.

Authority: 15 U.S.C. 272(b) and (c), 15 U.S.C. 278g–1(a), (b), 15 U.S.C. 7501(b).

(Catalog of Federal Domestic Assistance (CFDA) Number: 11.609)

Program Description

Program Objectives

The CNST's mission is to support the development of nanotechnology through research on measurement and fabrication methods, standards and technology, and by operating a state-of-the-art nanofabrication facility, the NanoFab. The primary program objectives of the Center for Nanoscale Science and Technology Postdoctoral Researcher and Visiting Fellow Measurement Science and Engineering Program are as follows:

1. To advance, through cooperative efforts with one or more universities, research consistent with the mission of NIST, and CNST specifically. *See http://www.nist.gov/cnst/* and 15 U.S.C. 271 *et seq.*

2. To provide training for the next generation of nanotechnologists by providing recent Ph.D. recipients postdoctoral positions ("Postdoctoral Researchers") to perform research at the CNST under the mentorship of a CNST Project Leader. The Postdoctoral Researchers must show promise as contributors to the mission of the CNST, and be selected on the basis of ability and of the relevance of the proposed work to the mission of the CNST.

3. To provide advanced training and access to the CNST's expertise and instrumentation by providing practicing scientists and engineers in the public and private sectors visiting senior research positions ("Visiting Fellows") to perform research at the CNST in collaboration with a CNST Project Leader. The Visiting Fellows must be selected on the basis of ability and on the relevance of the proposed work to the mission of the CNST.

4. To provide Postdoctoral Researchers and Visiting Fellows under this program with professional development opportunities, including travel to relevant workshops and conferences.

5. To encourage U.S. industrial, university, and government scientists to participate in research at the CNST, either in collaboration with the CNST research program or by using the NanoFab, by providing support for travel and local expenses for participants traveling beyond a normal commuting distance to the CNST in Gaithersburg, Maryland.

The CNST intends this financial assistance program to address all of these objectives through one or more Cooperative Agreements. An eligible applicant is not prohibited from including any collaborating subrecipients in its application.

Additional information about the CNST can be found at: *http://www.nist.gov/cnst*. Additional information about the CNST Postdoctoral Researcher and Visiting Fellow Measurement Science and Engineering Program may be found in the Federal Funding Opportunity (FFO) for this program.

Funding Availability: NIST anticipates making 1–2 awards for a period of performance of up to 5 years at $1,500,000 to $3,000,000 per year per award.

Total Amount to be Awarded: Up to $15 million in Cooperative Agreements.

The funding instrument used in this program will be a Cooperative Agreement.

Proposals will be considered for Cooperative Agreements with durations of up to five years, funded in one year increments, subject to the availability of funds, satisfactory progress, and the continuing relevance to the objectives of the NIST Center for Nanoscale Science and Technology. The anticipated level of funding is up to $3,000,000 per year and one or more awards may be approved. Between one and three awards are likely. Projects are expected to start by September 20, 2010.

NIST will determine whether to fund one award for the full amount; to divide available funds into multiple awards of any size, and negotiate scopes of work and budgets as appropriate; or not to select any proposal for funding, upon completing the selection process described below.

Cost Share Requirements: None.

Eligibility: This program is open to U.S. institutions of higher education.

Application Requirements: In accordance with the requirements set forth in the Content and Form of Application Submission section of the FFO, all applicants must either submit a paper copy (original and 2 copies) to the addresses under the **ADDRESSES** heading or an electronic application at *http://www.grants.gov.*

Evaluation Criteria

The applications will be evaluated and scored on the basis of the following evaluation criteria:

1. Technical merit of the proposal: Assesses whether the proposal accurately addresses the program goals and objectives. (40 pts)

2. Overall qualifications of the applicant: Assesses whether the applicant possesses the necessary experience, training, facilities, and administrative resources to accomplish the project. (40 pts)

3. Quality of the plan for providing support for travel and local expenses for students and scientists to participate in research at the CNST. (10 pts)

4. Project costs: The proposal budget is evaluated to determine if it is realistic and commensurate with the project needs and time-frame. (10 pts)

Selection Factors: The Selecting Official shall recommend award based upon the rank order and recommendations of the reviewers and upon one or more of the following factors:

a. Availability of Federal funds;

b. Balance/distribution of funds to ensure research opportunities for all types of Postdoctoral Researchers and Visiting Fellows and CNST scientific research areas described in the Program Description section of this Notice; and

c. Applicant's prior award performance.

Therefore, the highest scoring proposals may not necessarily be selected for an award. If an award is made to an applicant that deviates from the scores of the reviewers, the Selecting Official will justify the selection in writing based on selection factors described above.

Review and Selection Process: Initial Screening of all Applications: All timely submitted applications received in response to this announcement will be reviewed to determine whether they are complete and responsive to the scope of the stated objectives of the Program. Incomplete or non-responsive applications will not be reviewed for technical merit. NIST will retain one copy of each incomplete or non-responsive application for three years for record keeping purposes. The remaining copies will be destroyed.

Each complete and responsive application will be reviewed by at least three independent, objective NIST employees, who are knowledgeable in the subject matter of this announcement and the program objectives, and who are able to conduct a review based on the Evaluation Criteria for the Program as described in this notice. The reviewers will reach a consensus score resulting in a rank order of applications and make recommendations for funding to the Selecting Official. In making final selections, the Selecting Official (Deputy Director, CNST) will select funding recipients based upon the rank order of the proposals and the selection factors. The final award of Cooperative Agreements will be made by the NIST Grants Officer in Gaithersburg, Maryland, based on compliance with application requirements as published in this notice, compliance with applicable legal and regulatory requirements, and whether the recommended applicants are determined to be responsible. Unsatisfactory performance on any previous Federal award may result in an application not being considered for funding. Applicants may be asked to modify objectives, work plans, or budgets, and provide supplemental information required by the agency prior to award. The decision of the Grants Officer is final.

Application Submission Information: All applicants should be aware that adequate time must be factored into applicant schedules for delivery of the application for both electronic and paper submission. Applicants who submit electronic applications are advised that volume on Grants.gov may be extremely heavy, and if Grants.gov is unable to accept applications electronically in a timely fashion, applicants are encouraged to exercise their option to submit applications in paper format.

Applications must be received on time, as the review process is expected to begin shortly after the deadline.

The Department of Commerce Pre-Award Notification Requirements for Grants and Cooperative Agreements: The Department of Commerce Pre-Award Notification Requirements for Grants and Cooperative Agreements, which are contained in the **Federal Register** Notice of February 11, 2008 (73 FR 7696), are applicable to this notice on the form SF–424 items 8.b. and 8.c., the applicant's 9-digit Employer/Taxpayer Identification Number (EIN/TIN) and 9-digit Dun and Bradstreet Data Universal Numbering System (DUNS) number must be consistent with the information on the Central Contractor Registration (CCR) (*http://www.ccr.gov*) and Automated Standard Application for Payment System (ASAP). For complex organizations with multiple EIN/TIN and DUNS numbers, the EIN/TIN and DUNS numbers MUST be the numbers for the applying organization. Organizations that provide incorrect/inconsistent EIN/TIN and DUNS numbers may experience significant delays in receiving funds if their proposal is selected for funding. Please confirm that the EIN/TIN and DUNS number are consistent with the information on the CCR and ASAP.

Collaborations with NIST Employees: Collaboration with NIST is presumed in the Center for Nanoscale Science and

Technology Postdoctoral Researcher and Visiting Fellow Measurement Science and Engineering Program. If any applicant proposes any activities involving specific NIST employees, the statement of work should include a statement of this intention, a description of the collaboration, and prominently identify the NIST employee(s) involved. Any collaboration by a NIST employee must be approved by appropriate NIST management and is at the sole discretion of NIST. Prior to beginning the merit review process, NIST will verify the approval of the proposed collaboration. Any unapproved collaboration will be stricken from the proposal prior to the merit review.

Use of NIST Intellectual Property: If the applicant anticipates using any NIST-owned intellectual property to carry out the work proposed, the applicant should identify such intellectual property. This information will be used to ensure that no NIST employee involved in the development of the intellectual property will participate in the review process for that competition. In addition, if the applicant intends to use NIST-owned intellectual property, the applicant must comply with all statutes and regulations governing the licensing of Federal government patents and inventions, described at 35 U.S.C. 200–212, 37 CFR part 401, 15 CFR 4.36, and in Section B.21 of the Department of Commerce Pre-Award Notification Requirements, 73 FR 7696 (Feb. 11, 2008). Questions about these requirements may be directed to the Chief Counsel for NIST, 301–975–2803.

Any use of NIST-owned intellectual property by a proposer is at the sole discretion of NIST and will be negotiated on a case-by-case basis if a project is deemed meritorious. The applicant should indicate within the statement of work whether it already has a license to use such intellectual property or whether it intends to seek one.

If any inventions made in whole or in part by a NIST employee arise in the course of an award made pursuant to this notice, the United States government may retain its ownership rights in any such invention. Licensing or other disposition of NIST's rights in such inventions will be determined solely by NIST, and include the possibility of NIST putting the intellectual property into the public domain.

Collaborations making use of Federal Facilities: All applications should include a description of any work proposed to be performed using Federal Facilities. If an applicant proposes use of NIST facilities, the statement of work should include a statement of this intention and a description of the facilities. Any use of NIST facilities must be approved by appropriate NIST management and is at the sole discretion of NIST. Prior to beginning the merit review process, NIST will verify the availability of the facilities and approval of the proposed usage. Any unapproved facility use will be stricken from the proposal prior to the merit review. Examples of some facilities that may be available for collaborations are listed on the NIST Technology Services Web site, *http://ts.nist.gov/.*

Paperwork Reduction Act: The standard forms in the application kit involve a collection of information subject to the Paperwork Reduction Act. The use of Standard Forms 424, 424A, 424B, 424 (R&R), SF–LLL, and CD–345 have been approved by OMB under the respective Control Numbers 0348–0043, 0348–0044, 0348–0040, 4040–0001, 0348–0046, and 0605–0001. Notwithstanding any other provision of the law, no person is required to respond to, nor shall any person be subject to a penalty for failure to comply with, a collection of information subject to the requirements of the Paperwork Reduction Act, unless that collection of information displays a valid OMB Control Number.

Research Projects Involving Human Subjects, Human Tissue, Data or Recordings Involving Human Subjects: Any proposal that includes research involving human subjects, human tissue, data or recordings involving human subjects must meet the requirements of the Common Rule for the Protection of Human Subjects (Common Rule), codified for the Department of Commerce at 15 CFR Part 27. In addition, any proposal that includes research on these topics must be in compliance with any statutory requirements imposed upon the Department of Health and Human Services (DHHS) and other federal agencies regarding these topics, all regulatory policies and guidance adopted by DHHS, the Food and Drug Administration, and other Federal agencies on these topics, and all Presidential statements of policy on these topics. NIST will accept the submission of human subjects protocols that have been approved by Institutional Review Boards (IRBs) possessing a current registration filed with DHHS and to be performed by institutions possessing a current, valid Federal-wide Assurance (FWA) from DHHS. NIST will not issue a single project assurance (SPA) for any IRB reviewing any human subjects protocol proposed to NIST.

President Obama has issued Executive Order No. 13,505 (74 FR 10667, March 9, 2009), revoking previous Executive Orders and Presidential statements regarding the use of human embryonic stem cells in research. On July 30, 2009, President Obama issued a memorandum directing that agencies that support and conduct stem cell research adopt the "National Institutes of Health Guidelines for Human Stem Cell Research" (NIH Guidelines), which became effective on July 7, 2009, "to the fullest extent practicable in light of legal authorities and obligations." On September 21, 2009, the Department of Commerce submitted to the Office of Management and Budget a statement of compliance with the NIH Guidelines. In accordance with the President's memorandum, the NIH Guidelines, and the Department of Commerce statement of compliance, NIST will support and conduct research using only human embryonic stem cell lines that have been approved by NIH in accordance with the NIH Guidelines and will review such research in accordance with the Common Rule, as appropriate. NIST will not support or conduct any type of research that the NIH Guidelines prohibit NIH from funding. NIST will follow any additional polices or guidance issued by the current Administration on this topic.

Research Projects Involving Vertebrate Animals: Any proposal that includes research involving vertebrate animals must be in compliance with the National Research Council's "Guide for the Care and Use of Laboratory Animals" which can be obtained from National Academy Press, 2101 Constitution Avenue, NW., Washington, DC 20055. In addition, such proposals must meet the requirements of the Animal Welfare Act (7 U.S.C. 2131 *et seq.*), 9 CFR Parts 1, 2, and 3, and if appropriate, 21 CFR Part 58. These regulations do not apply to proposed research using pre-existing images of animals or to research plans that do not include live animals that are being cared for, euthanized, or used by the project participants to accomplish research goals, teaching, or testing. These regulations also do not apply to obtaining animal materials from commercial processors of animal products or to animal cell lines or tissues from tissue banks.

Limitation of Liability: Funding for the programs listed in this notice is contingent upon the availability of Fiscal Year 2010 appropriations. Publication of this announcement does not oblige NIST or the Department of

Commerce to award any specific project or to obligate any available funds.

Executive Order 12866: This funding notice was determined to be not significant for purposes of Executive Order 12866.

Executive Order 13132 (Federalism): It has been determined that this notice does not contain policies with federalism implications as that term is defined in Executive Order 13132.

Executive Order 12372 (Intergovernmental Review of Federal Programs)

Applications under this program are not subject to Executive Order 12372, "Intergovernmental Review of Federal Programs."

Administrative Procedure Act/ Regulatory Flexibility Act: Notice and comment are not required under the Administrative Procedure Act (5 U.S.C. 553) or any other law, for rules relating to public property, loans, grants, benefits or contracts (5 U.S.C. 553 (a)). Because notice and comment are not required under 5 U.S.C. 553, or any other law, for rules relating to public property, loans, grants, benefits or contracts (5 U.S.C. 553(a)), a Regulatory Flexibility Analysis is not required and has not been prepared for this notice, 5 U.S.C. 601 *et seq.*

Reporting: Successful finalists will be required to submit, on a semi-annual basis, for the periods ending March 31 and September 30 of each year, a technical progress report and a SF–269, Financial Status Report. From time to time, and in accordance with the Uniform Administrative Requirements and other terms and conditions governing the award, the recipient may need to submit property and patent reports.

Anticipated Announcement and Award Date

NIST plans to make awards by September 20, 2010.

Dated: March 18, 2010.

Marc G. Stanley,

Acting Deputy Director.

[FR Doc. 2010–6533 Filed 3–23–10; 8:45 am]

BILLING CODE 3510–13–P

DEPARTMENT OF COMMERCE

National Telecommunications and Information Administration

[Docket Number: 0907141137–0154–09]

RIN 0660–ZA28

Broadband Technology Opportunities Program

AGENCY: National Telecommunications and Information Administration, U.S. Department of Commerce.

ACTION: Notice of Funds Availability; Extension of Application Closing Deadline for Comprehensive Community Infrastructure (CCI) Projects.

SUMMARY: NTIA announces that the new application closing deadline for the electronic submission of CCI projects under the Broadband Technology Opportunities Program (BTOP) is extended until 10 p.m. Eastern Daylight Time (EDT) on March 26, 2010.

DATES: All applications for funding CCI projects must be submitted electronically by 10 p.m. EDT on March 26, 2010. There is no change to the filing deadline for applicants seeking a waiver of the electronic filing requirement. For CCI applicants wishing to apply in another format (e.g., paper), NTIA must **receive** the application and waiver request by 5 p.m. EDT on March 26, 2010.

ADDRESSES: The CCI application package for electronic submission is available at *http://www.broadbandusa.gov.* See supplementary information for more details.

FOR FURTHER INFORMATION CONTACT: For general inquiries regarding BTOP, contact Anthony Wilhelm, Director, BTOP, Office of Telecommunications and Information Applications, National Telecommunications and Information Administration, U.S. Department of Commerce, 1401 Constitution Avenue, NW, HCHB, Room 4887, Washington, DC, 20230; Help Desk email: BroadbandUSA@usda.gov, Help Desk telephone: 1–877–508–8364.

SUPPLEMENTARY INFORMATION: On January 22, 2010, NTIA published a Notice of Funds Availability and Solicitation of Applications (Second NOFA) in the **Federal Register** announcing general policy and application procedures for the second round of BTOP funding. (75 FR 3792, Jan. 22, 2010). In the Second NOFA, NTIA required all applicants to submit their applications electronically through an online application system at *http://www.broadbandusa.gov.* (75 FR at 3805). NTIA established an application window for BTOP projects from February 16, 2010 at 8 a.m. Eastern Standard Time (EST) through March 15, 2010 at 5 p.m. EDT (Application Closing Deadline). On March 3, 2010, NTIA announced the extension of the Application Closing Deadline for CCI projects under BTOP until 5 p.m. EDT on March 26, 2010. (75 FR 10464, Mar. 8, 2010).

NTIA announces this extension in the Application Closing Deadline for CCI projects in the interest of ensuring that BTOP funding is made available in the most equitable manner. The complexity of preparing an infrastructure application requires applicants to offer proposals that are truly comprehensive in scope. NTIA recognizes that applicants may need the full business day on Friday, March 26, 2010, to finalize their proposals. To accommodate applicants in time zones other than the Eastern Time zone, NTIA will extend the filing deadline by five hours to Friday, March 26, 2010, at 10 p.m. EDT. All other requirements for electronic submissions set forth in the Second NOFA remain unchanged.

All applicants are strongly encouraged to register in the Central Contractor Registration (CCR) database now, begin uploading large .pdf files when they are complete, and submit their application as early as possible. Note, however, that an early submission will not confer any advantage or priority in review.

Dated: March 19, 2010.

Lawrence E. Strickling,

Assistant Secretary for Communications and Information.

[FR Doc. 2010–6558 Filed 3–22–10; 11:15 am]

BILLING CODE 3510–60–S

DEPARTMENT OF COMMERCE

International Trade Administration

Effect on Propane Consumers of the Propane Education and Research Council's Operations, Market Changes and Federal Programs

AGENCY: International Trade Administration, Department of Commerce.

ACTION: Notice of inquiry.

SUMMARY: The Department of Commerce (the Department) is seeking public comment on whether the operation of the Propane Education and Research Council (PERC), in conjunction with the cumulative effects of market changes and Federal programs, has had an effect

on residential, agricultural, process and nonfuel users of propane. This notice of inquiry is part of an effort to collect information to fulfill requirements under the Propane Education and Research Act of 1996 that established PERC and requires the Secretary of Commerce to assess the impact of PERC's activities on propane consumers.

DATES: Comments on this notice must be submitted on or before April 21, 2010.

ADDRESSES: You may submit comments by any of the following methods:

E-mail: David.Kincaid@trade.gov. Include the phrase "Propane Price Impacts on Consumers" in the subject line;

Fax: (202) 482–5665 (Attn: David Kincaid);

Mail or Hand Delivery/Courier: David Kincaid, U.S. Department of Commerce, 14th Street & Constitution Ave., NW., Suite 4053, Washington, DC 20230.

FOR FURTHER INFORMATION CONTACT: For questions on the submission of comments or to request copies of submitted comments, contact David Kincaid by telephone at 202–482–1706, or e-mail at *David.Kincaid@trade.gov*.

SUPPLEMENTARY INFORMATION: The Propane Education and Research Act of 1996 (Pub. L. 104–284) established the Propane Education and Research Council to enhance consumer and employee safety and training, to provide for research and development of clean and efficient propane utilization equipment, and to inform and educate the public about safety and other issues associated with the use of propane.

Section 12 of the Act requires the Secretary of Commerce to prepare and submit to Congress and the Secretary of Energy a report examining whether operation of the Council, in conjunction with the cumulative effects of market changes and Federal programs, has had an effect on propane consumers, including residential, agriculture, process, and nonfuel users of propane. The Secretary of Commerce shall consider and, to the extent practicable, shall include in the report submissions by propane consumers, and shall consider whether: (1) There have been long-term and short-term effects on propane prices as a result of the Council's activities and Federal programs; and (2) whether there have been changes in the proportion of propane demand attributable to various market segments. If the report demonstrates that there has been an adverse effect related to the Council's activities, the Secretary of Commerce shall make recommendations for correcting the situation.

In order to assist in the preparation of this study, the Department is seeking public comment on the effect of PERC's operation, market changes and Federal programs on propane consumers. For information on the operation and programs of PERC, you may visit PERC's Web site at *http://www.propanecouncil.org* or call PERC at (202) 452–8975.

The Department encourages interested persons who wish to comment to do so at the earliest possible time. The period for submission of comments will close on April 21, 2010. The Department will consider all comments received before the close of the comment period. Comments received after the end of the comment period will be considered, if possible, but their consideration cannot be assured. The Department will not accept comments accompanied by a request that a part or all of the material be treated confidentially because of its business proprietary nature or for any other reason. The Department will return such comments and materials to the persons submitting the comments and will not consider them. All comments submitted in response to this notice will be a matter of public record and will be available for public inspection and copying. All comments must be submitted to the Department through one of the methods listed under **ADDRESSES**.

The office does not maintain a separate public inspection facility. If you would like to view any comments received in response to this solicitation, please contact the individual listed in **FOR FURTHER INFORMATION CONTACT**.

Henry P. Misisco,

Deputy Assistant Secretary for Manufacturing, Acting.

[FR Doc. 2010–6532 Filed 3–23–10; 8:45 am]

BILLING CODE 3510–DR–P

DEPARTMENT OF COMMERCE

National Oceanic and Atmospheric Administration

RIN 0648–XV38

Endangered and Threatened Species; Take of Anadromous Fish

AGENCY: National Marine Fisheries Service (NMFS), National Oceanic and Atmospheric Administration (NOAA), Commerce.

ACTION: Notice of receipt and request for comment.

SUMMARY: Notice is hereby given that NMFS has received application from the Idaho Department of Fish and Game (IDFG) for a modification to an existing incidental take permit pursuant to the Endangered Species Act of 1973, as amended (ESA). The proposed modification is to extend the existing permit for one year. This document serves to notify the public of the availability for comment of the permit application. All comments received will become part of the public record and will be available for review pursuant to the ESA.

DATES: Comments must be received at the appropriate address or fax number (see **ADDRESSES**) no later than 5 p.m. Pacific time on April 23, 2010.

ADDRESSES: Written comments on the application should be sent to Brett Farman, National Marine Fisheries Services, Salmon Recovery Division, 1201 N.E. Lloyd Boulevard, Suite 1100, Portland, OR 97232. Comments may also be submitted by e-mail to: *IdahoFisheries.nwr@noaa.gov*. Include in the subject line of the e-mail comment the following identifier: Comments on IDFG's fishery modification. Comments may also be sent via facsimile (fax) to (503) 872–2737. Requests for copies of the permit applications should be directed to the National Marine Fisheries Services, Salmon Recovery Division, 1201 NE Lloyd Boulevard, Suite 1100, Portland, OR 97232. The documents are also available on the Internet at *www.nwr.noaa.gov*. Comments received will also be available for public inspection, by appointment, during normal business hours by calling (503) 230–5409.

FOR FURTHER INFORMATION CONTACT: Brett Farman at (503) 231–6222 or e-mail: *brett.farman@noaa.gov*.

SUPPLEMENTARY INFORMATION: This notice is relevant to the following species and evolutionarily significant units (ESUs) or distinct population segments (DPSs):

Chinook salmon (*Oncorhynchus tshawytscha*): threatened, Snake River spring/summer-run, and threatened, Snake River fall-run.

Sockeye salmon (*O. nerka*): endangered, Snake River.

Steelhead (*O. mykiss*): threatened, Snake River Basin.

Background

Section 9 of the ESA and Federal regulations prohibit the "taking" of a species listed as endangered or threatened. The term "take" is defined under the ESA to mean harass, harm, pursue, hunt, shoot, wound, kill, trap, capture, or collect, or to attempt to engage in any such conduct. NMFS may issue permits, under limited

circumstances, to take listed species if such taking is incidental to, and not the purpose of, the carrying out of an otherwise lawful activity, under section 10(a)(1)(B) of the ESA. NMFS regulations governing permits for threatened and endangered species are promulgated at 50 CFR 222.307.

In an application package received on December 31, 2009, the IDFG submitted an application to NMFS for a modification to existing ESA section 10(a)(1)(B) permit 1481. The modification would extend the duration of permit 1481 by one year, until May 31, 2011. The purpose of the extension is to provide authorization for recreational fisheries in Idaho affecting ESA-listed anadromous salmon and steelhead, while a coordinated harvest management framework process is developed by co-managers in the basin. Other than the extended duration, fisheries would be implemented under the proposed extension consistent with the current permit.

This notice is provided pursuant to section 10(c) of the ESA. NMFS will evaluate each application package, associated documents, and comments submitted thereon to determine whether the applications meets the requirements of section 10(a)(1)(B) of the ESA. If it is determined that the requirements are met, permit 1481 will be extended for one year, and the modified permit will be issued to the IDFG. NMFS will publish a record of its final action in the **Federal Register**.

Dated: March 18, 2010.

Angela Somma,

Chief, Endangered Species Division, Office of Protected Resources, National Marine Fisheries Service.

[FR Doc. 2010–6543 Filed 3–23–10; 8:45 am]

BILLING CODE 3510–22–S

DEPARTMENT OF COMMERCE

National Oceanic and Atmospheric Administration

RIN 0648–XV39

Endangered and Threatened Species; Take of Anadromous Fish

AGENCY: National Marine Fisheries Service (NMFS), National Oceanic and Atmospheric Administration (NOAA), Commerce.

ACTION: Notice of receipt and request for comment.

SUMMARY: Notice is hereby given that NMFS has received four applications for direct take permits, in the form of Hatchery and Genetic Management Plans (HGMPs) pursuant to the Endangered Species Act of 1973, as amended (ESA); two applications from the Public Utility District No. 1 (PUD) of Chelan County and two from the Public Utility District No. 2 (PUD) of Grant County. The Washington Department of Fish and Wildlife (WDFW) is identified as a co-permit applicant in each of these HGMPs. The duration of each of the proposed Permits is ten (10) years. This document serves to notify the public of the availability for comment of the permit applications. All comments received will become part of the public record and will be available for review pursuant to section 10(c) of the ESA.

DATES: Comments must be received at the appropriate address or fax number (see **ADDRESSES**) no later than 5:00 p.m. Pacific time on April 23, 2010.

ADDRESSES: Written comments on the application should be sent to Kristine Petersen, National Marine Fisheries Services, Salmon Recovery Division, 1201 N.E. Lloyd Boulevard, Suite 1100, Portland, OR 97232. Comments may also be submitted by e-mail to: *WenatcheeHGMPs.nwr@noaa.gov*. Include in the subject line of the e-mail comment the following identifier: Comments on Wenatchee HGMPs. Comments may also be sent via facsimile (fax) to (503) 872–2737. Requests for copies of the permit applications should be directed to the National Marine Fisheries Services, Salmon Recovery Division, 1201 N.E. Lloyd Boulevard, Suite 1100, Portland, OR 97232. The documents are also available on the Internet at *http://www.nwr.noaa.gov*. Comments received will also be available for public inspection, by appointment, during normal business hours by calling (503) 230–5409.

FOR FURTHER INFORMATION CONTACT: Kristine Petersen at (503) 230–5409 or e-mail: kristine.petersen@noaa.gov.

SUPPLEMENTARY INFORMATION:

Species Covered in This Notice

Chinook salmon (*Oncorhynchus tshawytscha*): endangered, naturally produced and artificially propagated Upper Columbia River spring-run.

Steelhead (*O. mykiss*): threatened, naturally produced and artificially propagated Upper Columbia River.

Background

Section 9 of the ESA and Federal regulations prohibit the "taking" of a species listed as endangered or threatened. The term "take" is defined under the ESA to mean harass, harm, pursue, hunt, shoot, wound, kill, trap, capture, or collect, or to attempt to engage in any such conduct. NMFS may issue permits to take listed species for any act otherwise prohibited by section 9 for scientific purposes or to enhance the propagation or survival of the affected species, under section 10(a)(1)(A) of the ESA. NMFS regulations governing permits for threatened and endangered species are promulgated at 50 CFR 222.307.

In an application received on October 15, 2009, the Chelan PUD submitted an application to NMFS for an ESA section 10(a)(1)(A) permit for the direct take of ESA listed upper Columbia River spring Chinook salmon from the Chiwawa River in order to carry out an artificial propagation (hatchery) program to enhance the species. The purpose of this program is to mitigate for un-avoidable mortality of upper Columbia River spring Chinook salmon at Rock Island and Rocky Reach Dams as well as to conserve, and ultimately restore the naturally spawning Chiwawa River spring Chinook salmon spawning aggregate, which is part of the Wenatchee population within the Upper Columbia River basin.

In an application received on October 15, 2009, the Chelan PUD submitted an application to NMFS for an ESA section 10(a)(1)(A) permit for the direct take of ESA listed upper Columbia River steelhead from the Wenatchee River in order to carry out an artificial propagation (hatchery) program to enhance the species. The purpose of this program is to mitigate for un-avoidable mortality of upper Columbia River steelhead at Rock Island and Rocky Reach Dams as well as to conserve, and ultimately restore the naturally spawning Wenatchee River steelhead population within the Upper Columbia River basin.

In an application received on February 25, 2010, the Grant PUD submitted an application with an addendum to NMFS for an ESA section 10(a)(1)(A) permit for the direct take of ESA listed upper Columbia River spring Chinook salmon from the Nason Creek in order to carry out an artificial propagation (hatchery) program to enhance the species. The purpose of this program is to mitigate for un-avoidable mortality of spring Chinook salmon at Priest Rapids and Wanapum Dams as well as to conserve, and ultimately restore the naturally spawning Nason Creek spring Chinook salmon spawning aggregate, which is part of the Wenatchee population within the Upper Columbia River basin.

In an application received on February 25, 2010, the Grant PUD submitted an application with an addendum to NMFS for an ESA section

10(a)(1)(A) permit for the direct take of ESA listed upper Columbia River spring Chinook salmon from the White River in order to carry out an artificial propagation (hatchery) program to enhance the species. The purpose of this program is to mitigate for un-avoidable mortality of spring Chinook salmon at Priest Rapids and Wanapum Dams as well as to conserve, and ultimately restore the naturally spawning White River spring Chinook salmon spawning aggregate, which is part of the Wenatchee population within the Upper Columbia River basin.

Authority

This notice is provided pursuant to section 10(c) of the ESA. NMFS will evaluate each application, associated documents, and comments submitted thereon to determine whether the applications meets the requirements of section 10(a)(1)(A) of the ESA. If it is determined that the requirements are met, permits will be issued to the Chelan and Grant PUDs with the WDFW as co-permit holder for the purpose of carrying out the enhancement program. NMFS will publish a record of its final action in the **Federal Register**.

Dated: March 18, 2010.

Angela Somma,

Chief, Endangered Species Division, Office of Protected Resources, National Marine Fisheries Service.

[FR Doc. 2010–6545 Filed 3–23–10; 8:45 am]

BILLING CODE 3510–22–S

DEPARTMENT OF COMMERCE

National Oceanic and Atmospheric Administration

RIN 0648–XV35

Endangered and Threatened Species; Take of Anadromous Fish

AGENCY: National Marine Fisheries Service (NMFS), National Oceanic and Atmospheric Administration (NOAA), Commerce.

ACTION: Receipt of applications for scientific research permits; request for comments.

SUMMARY: Notice is hereby given that NMFS has received applications for permits for scientific research from National Resource Scientists, Inc. (NRSI) in Red Bluff, CA (14685, 14688), and California Department of Fish and Game (CDFG), North Central Region 2, in Rancho Cordova, CA (14808). This notice is relevant to federally endangered Sacramento River winter-run Chinook salmon (*Oncorhynchus tshawytscha*), threatened Central Valley spring-run Chinook salmon (*O. tshawytscha*), threatened Central Valley steelhead (*O. mykiss*), and threatened Southern Distinct Population Segment of North American green sturgeon (*Acipenser medirostris*). This document serves to notify the public of the availability of the permit applications for review and comment.

DATES: Written comments on the permit applications must be received no later than 5 p.m. Pacific Standard Time on April 23, 2010.

ADDRESSES: Written comments on the permit applications should be sent to the appropriate office as indicated below. Comments may also be sent via e-mail to: *FRNpermitsSAC@noaa.gov* or fax to the number indicated for the request. The applications and related documents are available for review by appointment: Protected Resources Division, NMFS, 650 Capitol Mall, Suite 8–300, Sacramento, CA 95814 (ph: 916–930–3600, fax: 916–930–3629).

FOR FURTHER INFORMATION CONTACT: Shirley Witalis at phone number 916–930–3606, or e-mail: *FRNpermitsSAC@noaa.gov*.

SUPPLEMENTARY INFORMATION:

Authority

Issuance of permits and permit modifications, as required by the Endangered Species Act of 1973 (16 U.S.C. 1531 1543) (ESA), is based on a finding that such permits/modifications: (1) are applied for in good faith; (2) would not operate to the disadvantage of the listed species which are the subject of the permits; and (3) are consistent with the purposes and policies set forth in section 2 of the ESA. Authority to take listed species is subject to conditions set forth in the permits. Permits and modifications are issued in accordance with and are subject to the ESA and NMFS regulations governing listed fish and wildlife permits (50 CFR parts 222-226).

Those individuals requesting a hearing on an application listed in this notice should set out the specific reasons why a hearing on that application would be appropriate (see ADDRESSES). The holding of such a hearing is at the discretion of the Assistant Administrator for Fisheries, NOAA. All statements and opinions contained in the permit action summaries are those of the applicant and do not necessarily reflect the views of NMFS.

Species Covered in This Notice

This notice is relevant to federally-listed endangered Sacramento River winter-run Chinook salmon (*Oncorhynchus tshawytscha*), threatened Central Valley spring-run Chinook salmon (*O. tshawytscha*) ESU, threatened Central Valley steelhead (*O. mykiss*), threatened Central California Coast steelhead (*O. mykiss*), and threatened Southern Distinct Population of North American green sturgeon (*Acipenser medirostris*).

Applications Received

NRSI requests a 5–year permit (14685) for an estimated annual take of 20 adult and 100 juvenile Central Valley steelhead associated with the Merced River salmonid monitoring program. The program researches anadromous salmonid spawning and rearing habitats, migration timing of adult Chinook salmon, and juvenile Chinook salmon outmigration and survival in the lower Merced River. NRSI proposes to monitor fish by conducting snorkel surveys, and employing Didson sonar cameras into fish weirs. NRSI proposes to capture fish by rotary screw trap and beach seine, anesthesize and sample fish for species identification, tags, marks and fin clips, lengths and weights, and release back to the river. NRSI requests authorization for an estimated total take of 100 adults and 500 juveniles (with an estimated total of 10 percent non-intentional mortality). NRSI does not propose to kill any fish being captured but some trapped fish may die as an unintentional result of research activities. No mortality is anticipated with passive monitoring.

NRSI requests a 2–year permit (14688) for an estimated annual take of 943 juvenile Sacramento River winter-run Chinook salmon, 97 Central Valley spring-run Chinook salmon, 56 Central Valley steelhead, and 125 Southern Distinct Population Segment of North American green sturgeon at five irrigation diversion sites (river miles [RMs] 88.2, 90.1, 102.5, 103.3, and 114.3) off the Sacramento River, CA. This research is part of an on-going investigation for developing prioritization criteria for fish screening projects, and will correlate fish entrainment with the physical, hydraulic, and habitat variables at each diversion site. NRSI proposes to use fyke nets to capture fish already entrained in diversion canals. Fish will be captured on the outfall side of pumped diversions and are expected to have been mortally injured by pressurized pipes and warm water, or lost to the water distribution systems. Dead and moribund fish will be identified to species/race, enumerated, measured, and placed back into the canals; any captured live fish will be immediately returned to the riverside of

the diversion site. Daily sampling at each diversion site will be performed from April 1 through December 31, in 2010, and April 1 through December 31, 2011. NRS requests authorization for an estimated total take of 1,886 juvenile Sacramento River winter-run Chinook salmon, 194 juvenile Central Valley spring-run Chinook salmon, and 112 juvenile Central Valley steelhead and 250 juvenile North American green sturgeon.

CDFG requests a 5-year permit (14808) for an estimated annual take of 200 natural and 50 hatchery juvenile Sacramento River winter-run Chinook salmon, 700 natural juvenile Central Valley spring-run Chinook salmon and 28 natural and 112 hatchery juvenile Central Valley steelhead, associated with monitoring and research activities at Knights Landing (RM 88.5) on the mainstem Sacramento River, Central Valley, CA. The project will provide annual estimates of species abundance and migration run-timing to best address critical water management affecting salmonid out-migration routes. CDFG proposes to collect juvenile fish by paired rotary screw traps fishing continuously 24 hours per day, 7 days per week, from October 1 through June 30. Fish will be sampled for identification to species and life stage, counted, measured and weighed. All steelhead and non-adipose fin-clipped Chinook salmon will be released back into the river. Chinook salmon having an adipose fin-clip will be sacrificed for coded-wire tag collection. Collected data will be summarized to provide seasonal run-timing, abundance, and size distribution of salmonids in the Sacramento River before they enter the Sacramento-San Joaquin Delta. CDFG requests authorization for an estimated total take of 1,000 natural and 250 hatchery winter-run Chinook salmon juveniles, 3,500 natural spring-run Chinook salmon juveniles, and 140 natural and 560 hatchery Central Valley steelhead juveniles.

Dated: March 18, 2010.

Angela Somma,

Chief, Endangered Species Division, Office of Protected Resources, National Marine Fisheries Service.

[FR Doc. 2010–6539 Filed 3–23–10; 8:45 am]

BILLING CODE 3510–22–S

DEPARTMENT OF COMMERCE

International Trade Administration

U.S. Travel And Tourism Advisory Board: Meeting of the U.S. Travel and Tourism Advisory Board

AGENCY: International Trade Administration, U.S. Department of Commerce.

ACTION: Notice of an open meeting.

SUMMARY: The U.S. Travel and Tourism Advisory Board (Board) will hold a meeting to discuss topics related to the travel and tourism industry.

DATES: April 8, 2010 at 1 p.m. (ET).

ADDRESSES: Department of Commerce, 1401 Constitution Avenue, NW., Room 4830, Washington, DC 20230.

FOR FURTHER INFORMATION CONTACT: J. Marc Chittum, U.S. Travel and Tourism Advisory Board, Room 4043, 1401 Constitution Avenue, NW., Washington, DC 20230, *telephone:* 202–482–4501, *e-mail: Marc.Chittum@trade.gov*.

SUPPLEMENTARY INFORMATION:

Background: The Board was re-chartered on September 3, 2009, to advise the Secretary of Commerce on matters relating to the travel and tourism industry.

Topics to be considered: The agenda for the April 8, 2010, meeting is as follows:

1. Welcome & introduction of new members.
2. Discussion of topics related to the travel and tourism industry.

Public Participation: The meeting will be open to the public and the room is disabled-accessible. Public seating is limited and available on a first-come, first-served basis. Members of the public wishing to attend the meeting must notify J. Marc Chittum at the contact information above by 5 p.m. Eastern Time on April 5, 2010, in order to pre-register for clearance into the building. Please specify any requests for reasonable accommodation at least five business days in advance of the meeting. Last minute requests will be accepted, but may be impossible to fill.

No time will be available for oral comments from members of the public attending the meeting. Any member of the public may submit pertinent written comments concerning the Board's affairs at any time before and after the meeting. Comments may be submitted to J. Marc Chittum, Executive Secretary, at the contact information indicated above. To be considered during the meeting, comments must be received no later than 5 p.m. Eastern Time on April 5, 2010, to ensure transmission to the Board prior to the meeting. Comments received after that date will be distributed to the members but may not be considered at the meeting.

Copies of Board meeting minutes will be available within 90 days of the meeting.

Dated: March 18, 2010.

J. Marc Chittum,

Executive Secretary, U.S. Travel and Tourism Advisory Board.

[FR Doc. 2010–6403 Filed 3–23–10; 8:45 am]

BILLING CODE 3510–DR–P

DEPARTMENT OF COMMERCE

National Oceanic and Atmospheric Administration

RIN 0648–ZC16

Pacific Coastal Salmon Recovery Fund

AGENCY: National Marine Fisheries Service (NMFS), National Oceanic and Atmospheric Administration (NOAA), Commerce.

ACTION: Notice of funding availability.

SUMMARY: NOAA announces the availability of Pacific Coastal Salmon Recovery Funding (PCSRF), as authorized in the Northern Boundary and Transboundary Rivers Restoration and Enhancement Fund and Southern Boundary Restoration and Enhancement Fund, to support the restoration and conservation of Pacific salmon and steelhead populations and their habitat. The program makes funding available to the States of Alaska, Washington, Oregon, Idaho, California and Nevada and Federally-recognized tribes of the Columbia River and Pacific Coast for projects necessary for conservation of salmon and steelhead populations that are listed as threatened or endangered, or identified by a State as at-risk or to be so-listed; for maintaining populations necessary for exercise of tribal treaty fishing rights or native subsistence fishing; or for conservation of Pacific coastal salmon and steelhead habitat. This announcement outlines the guidelines that will be used to distribute funding to eligible entities.

DATES: Pre-Applications are not mandatory, but highly encouraged. They must be received no later than April 23, 2010 if the applicant expects to receive any feedback from NMFS on completeness of package and initial determination of compliance with minimum requirements. Final Applications should be submitted via *www.grants.gov* and must be received no later than 11:59 p.m. PST on May 10, 2010. No facsimile or electronic mail applications will be accepted. Paper

applications must be postmarked by May 10, 2010. Any application transmitted or postmarked, as the case may be, after the deadline will be considered non-responsive and will not be considered for funding in this competition. Applications submitted through Grants.gov will have a date and time indication on them. Hard copy applications will be date and time stamped when they are received.

Note: It may take Grants.gov up to two (2) business days to validate or reject the application. Please keep this in mind in developing your submission timeline.

ADDRESSES: All application materials can be found at the grants.gov portal at *http://www.grants.gov*. If an applicant does not have internet access, applications can be received from the following address: Nicolle Hill, NMFS Northwest Region Building #1, 7600 Sand Point Way, Seattle, WA 98115. NMFS' Internet website at *http://www.nwr.noaa.gov* contains additional information on PCSRF. For further information on PCSRF, please contact Scott Rumsey, NMFS Northwest Region PCSRF Program Coordinator at (503) 872–2791. Questions regarding this announcement should be directed to Nicolle Hill, NMFS Northwest Region PCSRF Federal Program Officer, at (206) 526–4358 or *Nicolle.Hill@noaa.gov*.

FOR FURTHER INFORMATION CONTACT: For further information on PCSRF, please contact Scott Rumsey, NMFS Northwest Region PCSRF Program Coordinator, at (503) 872–2791. Questions regarding this announcement should be directed to Nicolle Hill, NMFS Northwest Region PCSRF Federal Program Officer, at (206) 526–4358 or *Nicolle.Hill@noaa.gov*.

SUPPLEMENTARY INFORMATION: The PCSRF was established in Fiscal Year 2000 to address the need to protect, restore and conserve Pacific Chinook, chum, coho, pink and sockeye salmon and steelhead, and their habitat. Authorization of PCSRF was in response to the Endangered Species Act (ESA) listings of Pacific salmon and steelhead in Washington, Oregon, Idaho and California as well as the effects of the harvest restrictions placed on Southeast Alaska fishers through the 1999 Pacific Salmon Treaty agreement between the United States and Canada. The PCSRF supplements existing state, tribal and Federal programs to foster development of Federal-state-tribal-local partnerships in salmon recovery and conservation by providing grants to the eligible states, tribal commissions, and tribes. Under this solicitation, the National Oceanic and Atmospheric Administration (NOAA), National Marine Fisheries Service (NMFS) seeks applications for projects from individual eligible Indian tribes, eligible States, and representative Tribal commissions so that it can allocate the FY 2010 Federal funds for PCSRF grants on a merit basis. An applicant can only submit one application to the Federal Government for PCSRF program funding. Application submissions, requesting any funding from both the representative Tribal Commission and a Tribe represented by that Commission will not be accepted.

Electronic Access

The full text of the full funding opportunity announcement for this program can be accessed via the Grants.gov web site at *http://www.grants.gov*. The announcement will also be available by contacting the program officials identified under **FOR FURTHER INFORMATION CONTACT.** Applicants must comply with all requirements contained in the full funding opportunity announcement.

Statutory Authority

16 U.S.C. 3645 (d)(2) and The Consolidated Appropriations Act, 2010, P.L. 111–117

CFDA

11.438, Pacific Coast Salmon Recovery - Pacific Salmon Treaty Program

Funding Availability

Up to $80,000,000 may be available for fiscal year (FY) 2010 for projects. There are no restrictions on minimum funding request, but there is a limit of $30,000,000, on a maximum amount requested by any recipient. Award periods may extend to a maximum of five years.

Eligibility

Eligible state applicants are the States of Alaska, Washington, Oregon, Idaho, Nevada and California. Eligible tribal applicants are any federally recognized Pacific Coastal or Columbia River tribes.

Cost Sharing Requirements

State applicants are required to match or document in-kind contributions of at least 33% of received Federal funds. Indian tribes are exempt from any cost share requirement. Matching funds consist of PCSRF projects funded totally or partially by state appropriated funds; PCSRF projects that are funded totally or partially by sub-recipient or contractor funds; or PCSRF projects funded partially by other pre-approved sources of Federal funding. In-kind contributions must be applied directly to a PCSRF project in order to be considered match.

Evaluation and Selection Procedures

The general evaluation criteria and selection factors that apply to full applications to this funding opportunity are summarized below. Further information about the evaluation criteria and selection factors can be found in the full funding opportunity announcement.

Evaluation Criteria for Projects

NOAA standardized the evaluation and selection process for its competitive assistance programs. All proposals submitted in response to this notice shall be evaluated and selected in accordance with the process set out below. In considering the funding allocation for projects and program applications, all proposals will be evaluated on the following criteria with the maximum weighted values for each category listed below for a total of 100 points maximum:

1. Importance and/or relevance and applicability of proposed project to the program goals [30 Points]: This ascertains whether there is intrinsic value in the proposed work and its relevance to the PCSRF authorized activities and program priorities. Proposals will be evaluated based on how relevant and applicable their projects or program missions are to the authorized activities and program priorities listed at I.B. Successful applicants will be those that demonstrate their proposal directly addresses the PCSRF authorized activities and program priorities.

2. Technical/scientific merit [30 Points]: This assesses whether the approach is technically sound and/or innovative, if the methods are appropriate, and whether there are clear project goals and objectives. Proposals will be evaluated on whether there is a technically sound approach to manage and implement proposed projects; whether there is sufficient information to evaluate the project or program technically; and, if so, the strengths and/or weaknesses of the project or program approach to securing productive results. Successful program and project proposals will include:

a. A description of how the applicant organization will ensure that funded projects are part of a larger program plan.

b. A description of the proposed methods used for monitoring, measuring and evaluating the success or failure of the projects funded by the program.

c. A quantified amount of dedicated funding to monitoring activities, including salmon status and trend and habitat monitoring.

d. A description of how project details will be reported in order to track

performance including: information detailing the project reporting mechanisms, the staffing resources that will be dedicated to reporting, and the specific information that will be reported.

e. A description of how the organization will communicate results of projects to target audiences. Successful program proposals (states and tribal commissions) will describe the organization's selection evaluation method and allocation and implementation process for proposed projects; set forth selection priorities reflecting PCSRF authorized activities and program priorities, detail decision processes and allocation timelines; and describe how technical merit is defined and determined and how project feasibility is evaluated. Successful project proposals (tribes) will describe the specified approaches to achieving the project objectives, including timelines, geographic areas and methods.

3. Overall qualifications of applicants [15 Points]: This ascertains whether the applicant possesses the necessary education, experience, training, facilities, and administrative resources to accomplish the project. The organization and its management will be evaluated. The principal investigator and other personnel, including subcontractors and consultants participating in the project or program will be evaluated in terms of related experience and qualifications. Successful applications will include the following:

a. Details about the organization's administrative resources, credibility, financial stability, business management systems, capability to comply with Federal requirements, history of strong performance in the management of Federal funds, and knowledge and demonstrated history of Federal cost principles compliance and sub-recipient fiscal monitoring (if applicable).

b. Applicants should illustrate that their organization has the appropriate management authority to implement actions identified in the proposal.

c. Applicants should describe how they adhered to past reporting requirements including reporting data into the PCSRF database, and how they resolved database reporting issues, inconsistencies or missing metrics, if applicable.

4. Project costs [25 Points]: Proposals will be evaluated on their budget to determine if it is realistic and commensurate with the program or project needs and time-frame. Successful proposals will include:

a. A needs statement which summarizes the extent, severity or prevalence of funding needed in the serving geographical area to meet the PCSRF program priorities. The needs statement should be supported by evidence and described quantitatively (i.e. miles/acres of habitat needing restoration; number or extent of ESA listed Pacific salmon or Pacific salmon at risk; stocks important for tribal treaty fishing rights or native subsistence fishing, etc.). The needs statement will also address the recipients other source of funding for proposed programs and projects.

b. A detailed budget by program or project level which also itemizes the proposal level and overall level of administrative and overhead costs.

c. A budget detail identifying a minimum of 10% proposed budget for monitoring, either comprehensive project effectiveness monitoring or status and trend monitoring, as part of a comprehensive program. Individual project proposals should specify costs for monitoring project-level implementation and effectiveness.

d. State applications must provide a budget detail which identifies the minimum matching or in-kind requirements of 33% of Federal funds requested.

5. Outreach and education [0 Points]: Outreach and education, as defined in section IV.B.4.g. (States and Tribal Commissions) and IV.B.4.f. (Tribes), will be evaluated under section V.A.2.e. Review and Selection Process. Upon receipt of an application, an initial administrative review will be conducted to determine compliance with requirements and completeness of the application. The application will need to meet the following minimum requirements to be considered for funding:

1. Applicant is eligible to apply
2. Received application by deadline
3. Application is complete and includes all mandatory forms
4. Matching requirements are met (State Only)
5. Administrative programmatic costs are not exceeded (State and Commissions Only) Individual evaluations comprised of at least three (3) or more private and public experts will independently evaluate the applications and score them using the evaluation criteria set forth above. No consensus advice will be given. The reviewer' ratings will be averaged to produce a rank order of the proposals. Technical reviewers will be required to certify that they do not have a conflict of interest and that they will maintain confidentiality of the applications.

Panel Review: After the projects have been evaluated and ranked, the Agency will solicit comments and input on funding recommendation from a panel of at least three (3) Federal full-time employees comprised of the NMFS Alaska Region, Northwest Region and Southwest Region. The Agency will provide the panelists with a summary of the technical review evaluations, and, the rank order of the proposals.

Selection Factors for Projects

The Assistant Administrator for NMFS will be the Selecting Official. The Selecting Official will review the rank order, funding recommendations and comments from the Panel Review Committee and determine the recipients to be funded and how much funding shall be awarded to each selected recipient. In making the final selections, the Selecting Official will award in rank order unless the proposal is justified to be selected out of rank order based upon one of the selection factors below:

1. Availability of Funding
2. Balance/distribution of funds:
a. Geographically
b. By type of institutions
c. By type of partners
d. By research areas
e. By project types
3. Whether this project duplicates other projects funded or considered for funding by NOAA or other Federal agencies
4. Program priorities and policy factors as set forth in the Full Funding Opportunity Sections I.A. and B.
5. Applicant's prior award performance. (Accomplishments related to PCSRF goals.)
6. Partnerships and/or Participation of targeted groups

Intergovernmental Review

Applications under this program from state or local governments are subject to the provisions of Executive Order 12372, "Intergovernmental Review of Federal Programs."

Limitation of Liability

In no event will NOAA or the Department of Commerce be responsible for proposal preparation costs if these programs fail to receive funding or are cancelled because of other agency priorities. Publication of this announcement does not oblige NOAA to award any specific project or to obligate any available funds.

National Environmental Policy Act (NEPA)

NOAA must analyze the potential environmental impacts, as required by the National Environmental Policy Act

(NEPA), for applicant projects or proposals which are seeking NOAA Federal funding opportunities. Detailed information on NOAA compliance with NEPA can be found at the following NOAA NEPA website: *http://www.nepa.noaa.gov/*, including our NOAA Administrative Order 216–6 for NEPA, *http://www.nepa.noaa.gov/NAO216_6_TOC.pdf*, and the Council on Environmental Quality implementation regulations, *http://ceq.eh.doe.gov/nepa/regs/ceq/toc_ceq.htm*. Consequently, as part of an applicant's package, and under their description of their program activities, applicants are required to provide detailed information on the activities to be conducted, locations, sites, species and habitat to be affected, possible construction activities, and any environmental concerns that may exist (e.g., the use and disposal of hazardous or toxic chemicals, introduction of non-indigenous species, impacts to endangered and threatened species, aquaculture projects, and impacts to coral reef systems). In addition to providing specific information that will serve as the basis for any required impact analyses, applicants may also be requested to assist NOAA in drafting of an environmental assessment, if NOAA determines an assessment is required. Applicants will also be required to cooperate with NOAA in identifying feasible measures to reduce or avoid any identified adverse environmental impacts of their proposal. The failure to do so shall be grounds for not selecting an application. In some cases if additional information is required after an application is selected, funds can be withheld by the Grants Officer under a special award condition requiring the recipient to submit additional environmental compliance information sufficient to enable NOAA to make an assessment on any impacts that a project may have on the environment.

The Department of Commerce Pre-Award Notification Requirements for Grants and Cooperative Agreements

The Department of Commerce Pre-Award Notification Requirements for Grants and Cooperative Agreements contained in the **Federal Register** notice of February 11, 2008 (73 FR 7696), are applicable to this solicitation.

Paperwork Reduction Act

This document contains collection-of-information requirements subject to the Paperwork Reduction Act (PRA). The use of Standard Forms 424, 424A, 424B, and SF-LLL and CD–346 has been approved by the Office of Management and Budget (OMB) under the respective control numbers 0348–0043, 0348–0044, 0348–0040, 0348–0046, and 0605–0001.

Notwithstanding any other provision of law, no person is required to, nor shall a person be subject to a penalty for failure to comply with, a collection of information subject to the requirements of the PRA unless that collection of information displays a currently valid OMB control number.

Executive Order 12866

This notice has been determined to be not significant for purposes of Executive Order 12866. Executive Order 13132 (Federalism): It has been determined that this notice does not contain policies with Federalism implications as that term is defined in Executive Order 13132.

Administrative Procedure Act/ Regulatory Flexibility Act

Prior notice and an opportunity for public comment are not required by the Administrative Procedure Act or any other law for rules concerning public property, loans, grants, benefits, and contracts (5 U.S.C. 553(a)(2)). Because notice and opportunity for comment are not required pursuant to 5 U.S.C. 553 or any other law, the analytical requirements for the Regulatory Flexibility Act (5 U.S.C. 601 *et seq.*) are inapplicable. Therefore, a regulatory flexibility analysis has not been prepared.

Dated: March 18, 2010.

Gary C. Reisner,

Chief Financial Officer, National Marine Fisheries Service.

[FR Doc. 2010–6544 Filed 3–23–10; 8:45 am]

BILLING CODE 3510–22–S

DEPARTMENT OF COMMERCE

International Trade Administration

Notice of Scope Rulings

AGENCY: Import Administration, International Trade Administration, Department of Commerce.

DATES: *Effective Date:* March 24, 2010.

SUMMARY: The Department of Commerce ("Department") hereby publishes a list of scope rulings completed between July 1, 2009, and September 30, 2009. In conjunction with this list, the Department is also publishing a list of requests for scope rulings and anticircumvention determinations pending as of September 30, 2009. We intend to publish future lists after the close of the next calendar quarter.

FOR FURTHER INFORMATION CONTACT: Jennifer Moats or Julia Hancock, AD/CVD Operations, China/NME Group, Import Administration, International Trade Administration, U.S. Department of Commerce, 14th Street and Constitution Avenue, N.W., Washington, DC 20230; telephone: 202–482–5047 or 202–482–1394, respectively.

SUPPLEMENTARY INFORMATION:

Background

The Department's regulations provide that the Secretary will publish in the **Federal Register** a list of scope rulings on a quarterly basis. See 19 C.F.R. 351.225(o). Our most recent notification of scope rulings was published on September 29, 2009. *See Notice of Scope Rulings*, 74 FR 49859 (September 29, 2009). This current notice covers all scope rulings and anticircumvention determinations completed by Import Administration between July 1, 2009, and September 30, 2009, inclusive, and it also lists any scope or anticircumvention inquiries pending as of June 30, 2009. As described below, subsequent lists will follow after the close of each calendar quarter.

Scope Rulings Completed Between July 1, 2009, and September 30, 2009:

Multiple Countries

A–570–922 and C–570–923: Raw Flexible Magnets from the People's Republic of China; A–583–842: Raw Flexible Magnets from Taiwan
Requestor: Direct Innovations; certain decorative retail magnets are within the scope of the antidumping and countervailing duty orders; July 13, 2009.

Norway

A–403–801 and C–403–802: Fresh and Chilled Atlantic Salmon from Norway
Requestor: Changing Seas; its whole salmon steaks are within the scope of the antidumping and countervailing duty orders; August 5, 2009.

People's Republic of China

A–570–886: Polyethylene Retail Carrier Bags from the People's Republic of China
Requestor: Majestic International, LLC; 120 gift bags are outside the scope of the antidumping duty order; July 7, 2009.

A–570–886: Polyethylene Retail Carrier Bags from the People's Republic of China
Requestor: Care Line Industries, Inc.; certain bags designed for hospital use, which are not printed with store names or logos and packed in consumer packaging with printing indicating specific end–uses other than packaging or carrying merchandise from retail establishments, are outside the scope of

the antidumping duty order; July 17, 2009.

A–570–891: Hand Trucks and Certain Parts Thereof from the People's Republic of China

Requestor: Simon, Evers & Co., GmbH; the Relius Fold–Away Truck, Relius Tray–Shelf Utility Cart, Economical Steel Cart, Solid Platform Dolly and Flush Platform Dolly are all outside the scope of the antidumping duty order; December 3, 2009.

A–570–899: Artist Canvas from the People's Republic of China

Requestor: Art Supplies Enterprises, Inc.; framed artist canvas woven and primed in the Socialist Republic of Vietnam and cut and framed in the People's Republic of China is outside the scope of the antidumping duty order; July 10, 2009.

A–570–899: Artist Canvas from the People's Republic of China

Requestor: Art Supplies Enterprises, Inc.; framed artist canvas woven and primed in India and cut and framed in the People's Republic of China is outside the scope of the antidumping duty order; August 5, 2009.

A–570–901: Lined Paper Products from the People's Republic of China

Requestor: Vera Bradley; its Clip Notes, which contain a standard sized clipboard measuring 10" x 14" with a hinged metal clip at the top and a single pad of lined paper measuring 8 ½" x 11," where the clip board and the single pad of paper are decorated with Vera Bradley's pattern design, are outside the scope of the antidumping duty order because it is not a substantial part of the Clip Notes; July 29, 2009.

A–570–901: Lined Paper Products from the People's Republic of China

Requestor: Wal–Mart Stores, Inc.; its notebook component, when imported as part of the complete stationery set, is within the scope of the antidumping duty order; July 17, 2009.

A–570–910 and C–570–911: Certain Circular Welded Carbon Quality Steel Pipe from the People's Republic of China

Requestor: Constantine N. Polites and Company; unfinished scaffolding pipe is within the scope of the antidumping duty order; August 12, 2009.

A–570–910 and C–570–911: Certain Circular Welded Carbon Quality Steel Pipe from the People's Republic of China

Requestor: Tubos California; steel pipes used in water delivery systems, water and sewer purification systems and/or water filtration systems are within the scope of the antidumping duty order; July 21, 2009.

A–570–914: Light–Walled Rectangular Pipe and Tube from the People's Republic of China

Requestor: MMI Products, Inc.; whether MMI Products, Inc.'s fence posts are within the scope of the antidumping duty order; July 31, 2009.

A–570–916 and C–570–917: Laminated Woven Sacks from the People's Republic of China

Requestor: Shapiro Packaging; the Department has determined that Shapiro's three imported sacks are not merchandise covered by the scope of the Orders; July 29, 2009.

Anticircumvention Determinations Completed Between July 1, 2009, and September 30, 2009:

A–570–849: Cut–to-Length Carbon Steel Plate from the People's Republic of China

Requestor: Nucor Corporation, SSAB N.A.D., Evraz Claymont Steel, Evraz Oregon Steel Mills, and ArcelorMittal USA Inc.; imports of cut–to-length carbon steel plate with metallurgically and economically insignificant amounts of boron added, produced by Tianjin Iron and Steel Co., Ltd. or imported by Toyota Tsusho America, Inc. are circumventing the antidumping duty order; August 12, 2009.

A–570–894: Certain Tissue Paper Products from the People's Republic of China

Requestor: Seaman Paper Company of Massachusetts, Inc.; imports of certain tissue paper products from Thailand made out of jumbo rolls and sheets of tissue paper from the People's Republic of China are circumventing the antidumping duty order; June 19, 2009.

Scope Inquiries Terminated Between July 1, 2009, and September 30, 2009:

People's Republic of China

A–570–890: Wooden Bedroom Furniture from the People's Republic of China

Requestor: Target Corporation ("Target"); the Department terminated the scope inquiry filed on behalf of Target; July 6, 2009.

A–570–918: Steel Wire Garment Hangers from the People's Republic of China

Requestor: American Hanger; the Department terminated the scope inquiry filed on behalf of American Hanger; September 25, 2009.

A–570–918: Steel Wire Garment Hangers from the People's Republic of China

Requestor: Econoco Corporation; the Department terminated the scope inquiry filed on behalf of Econoco Corporation; September 25, 2009.

Anticircumvention Inquiries Terminated Between July 1, 2009, and September 30, 2009:

None.

Scope Inquiries Pending as of September 30, 2009:

Germany

A–428–801: Ball Bearings and Parts from Germany

Requestor: The Schaeffler Group; whether certain ball roller bearings are within the scope of the antidumping duty order; requested April 28, 2009; initiated June 12, 2009.

People's Republic of China

A–570–504: Petroleum Wax Candles from the People's Republic of China

Requestor: Trade Associates Group, Ltd.; whether its candles (multiple designs) are within the scope of the antidumping duty order; requested June 11, 2009.

A–570–504: Petroleum Wax Candles from the People's Republic of China

Requestor: Sourcing International, LLC; whether its flower candles are within scope of the antidumping duty order; requested June 24, 2009.

A–570–504: Petroleum Wax Candles from the People's Republic of China

Requestor: Sourcing International; whether its candles (multiple designs) are within scope of the antidumping duty order; requested July 28, 2009.

A–570–504: Petroleum Wax Candles from the People's Republic of China

Requestor: Sourcing International; whether its floral bouquet candles are within scope of the antidumping duty order; requested August 25, 2009.

A–570–804: Sparklers from the People's Republic of China:

Requestor: American Promotion Events, Inc.; whether its Sparkling Tree is within the scope of the antidumping duty order; requested September 2, 2009.

A–570–806: Silicon Metal from the People's Republic of China

Requestor: Globe Metallurgical Inc.; whether certain silicon metal exported by Ferro–Alliages et Mineraux to the United States from Canada is within the scope of the antidumping duty order; requested October 1, 2008.

A–570–814: Certain Carbon Steel Butt–Weld Pipe Fittings from the People's Republic of China

Requestor: King Architectural Metals ("King"); whether King's pipe fittings for structural use in handrails and fencing are within the scope of the antidumping duty order; requested April 17, 2009.

A–570–864: Pure Magnesium in Granular Form from the People's Republic of China

Requestor: ESM Group Inc.; whether atomized ingots are within the scope of the antidumping duty order; initiated April 18, 2007; preliminary ruling issued August 27, 2008.

A–570–868: Folding Metal Tables and Chairs from the People's Republic of China

Requestor: Lifetime Products, Inc. ("Lifetime"); whether Lifetime's fold–in-half adjustable height tables are outside the scope of the antidumping duty order; requested June 30, 2009.

A–570–891: Hand Trucks from the People's Republic of China

Requestor: Northern Tool & Equipment Co.; whether a high–axle torch cart (item 1164771) is within the scope of the antidumping duty order; requested March 23, 2007.

A–570–901: Lined Paper Products from the People's Republic of China

Requestor: Livescribe Inc., whether the patented dot–patterned paper (trademarked "ANOTO") is within the scope of the antidumping duty order; requested October 24, 2008; supplemented with additional information on July 14, 2009.

A–570–904: Certain Activated Carbon from the People's Republic of China

Requestor: Rolf C Hagen (USA) Corp; whether certain fish filter parts are within the scope of the antidumping duty order; requested November 14, 2008.

A–570–922: Raw Flexible Magnets from the People's Republic of China

Requestor: It's Academic, Inc.; whether four of its seven packages of locker magnets are within the scope of the antidumping duty order, requested June 4, 2009.

A–570–922 and C–570–923: Raw Flexible Magnets from the People's Republic of China

Requestor: It's Academic, Inc.; whether three of its seven printed flexible magnets are within the scope of the antidumping duty order, requested September 2, 2009.

A–570–924: Polyethylene Terephthalate ("PET") Film from the People's Republic of China

Requestor: Coated Fabrics Company; whether Amorphous PET ("APET"), Glycol–modified PET ("PETG"), and coextruded APET and with PETG on its outer surfaces ("GAG Sheet") are within the scope of the antidumping duty order; requested February 12, 2009.

A–570–932: Steel Threaded Rod from People's Republic of China

Requestor: Mid–State Bolt & Nut Co., Inc.; whether Concrete Wedge Anchors are within the scope of the antidumping duty order; requested July 15, 2009.

Anticircumvention Rulings Pending as of September 30, 2009:

None.

Interested parties are invited to comment on the completeness of this list of pending scope and anticircumvention inquiries. Any comments should be submitted to the Deputy Assistant Secretary for AD/CVD Operations, Import Administration, International Trade Administration, 14th Street and Constitution Avenue, N.W., APO/Dockets Unit, Room 1870, Washington, DC 20230.

This notice is published in accordance with 19 C.F.R. 351.225(o).

Dated: March 18, 2010.

John M. Andersen,

Acting Deputy Assistant Secretary for Antidumping and Countervailing Duty Operations.

[FR Doc. 2010–6525 Filed 3–23–10; 8:45 am]

BILLING CODE 3510–DS–S

DEPARTMENT OF DEFENSE

Office of the Secretary

Federal Advisory Committee; Defense Business Board (DBB); Open Meeting

AGENCY: Department of Defense (DoD).

ACTION: Meeting notice.

SUMMARY: Under the provisions of the Federal Advisory Committee Act of 1972 (5 U.S.C., Appendix, as amended), the Government in the Sunshine Act of 1976 (5 U.S.C. 552b, as amended), and 41 CFR 102–3.150, the Department of Defense announces that the Defense Business Board (DBB or Board) will meet on April 22, 2010. Subject to the availability of space, the meeting is open to the public.

DATES: The meeting will be held on Thursday, April 22, 2010, from 12:30 p.m. to 1:30 p.m.

ADDRESSES: The meeting will be held at the Pentagon, Room 3E–863, Washington, DC (escort required, see "Public's Accessibility to the Meeting" below).

FOR FURTHER INFORMATION CONTACT: For meeting information please contact Ms. Debora Duffy, Defense Business Board, 1155 Defense Pentagon, Room 5B–1088A, Washington, DC 20301–1155, *Debora.Duffy@osd.mil,* (703) 697–2168.

The Board's Designated Federal Officer (DFO) is Ms. Phyllis Ferguson, Defense Business Board, 1155 Defense Pentagon, Room 5B–1088A, Washington, DC 20301–1155, *Phyllis.Ferguson@osd.mil,* (703) 695–7563.

SUPPLEMENTARY INFORMATION:

Agenda

At this meeting, the Board will deliberate findings and draft recommendations from four Task Groups: (1) "Financial and Strategic Analysis to the Department of Defense (DoD) Investment Board," (2) "Enhancing the Department's Management Capabilities," (3) "Assessing DoD's Study Information Gap," (4) "Global Economic Crisis: Effects on Key Allies' Defense Spending and Implications to DoD (Germany)." The mission of the DBB is to advise the Secretary of Defense on effective strategies for implementation of best business practices of interest to the Department of Defense.

A copy of the draft agenda for the April 22, 2010, meeting may be obtained from the Board's Web site at *http://dbb.defense.gov/meetings.html* under "Upcoming Meetings: 22 April 2010."

Public's Accessibility to the Meeting

Pursuant to 5 U.S.C. 552b and 41 CFR 102–3.140 through 102–3.165, and the availability of space, this meeting is open to the public. Seating is on a first-come basis. All members of the public who wish to attend the meeting must contact Ms. Duffy (*see* **FOR FURTHER INFORMATION CONTACT**) no later than noon on Wednesday, April 14, to register and arrange for a Pentagon escort, if necessary. Public attendees requiring escort should arrive at the Pentagon Metro Entrance in time to complete security screening by 11:45 a.m. To complete security screening, please come prepared to present two forms of identification: (1) A government-issued photo I.D., and (2) any type of secondary I.D. that verifies the individual's name (i.e. debit card, credit card, work badge, social security card).

Special Accommodations

Individuals requiring special accommodations to access the public meeting should contact Ms. Duffy (*see* **FOR FURTHER INFORMATION CONTACT**) at least five (5) business days prior to the meeting so that appropriate arrangements can be made.

Procedures for Providing Public Comments

Pursuant to 41 CFR 102–3.105(j) and 102–3.140, and section 10(a)(3) of the Federal Advisory Committee Act of 1972, the public or interested organizations may submit written comments to the Board about its mission and topics pertaining to this public session.

Written comments are accepted at any time, however, written comments

addressing the April 22, 2010, meeting should be received by the DFO at least five (5) business days prior to the meeting date so that the comments may be made available to the Board for their consideration prior to the meeting. Written comments should be submitted via email to the DFO (see **FOR FURTHER INFORMATION CONTACT**) in any of the following formats: Adobe Acrobat, WordPerfect, or Word format. **Please note:** Since the Board operates under the provisions of the Federal Advisory Committee Act, as amended, all public presentations will be treated as public documents and will be made available for public inspection, up to and including being posted on the Board's Web site.

Dated: March 19, 2010.

Mitchell S. Bryman,

Alternate OSD Federal Register Liaison Officer, Department of Defense.

[FR Doc. 2010–6454 Filed 3–23–10; 8:45 am]

BILLING CODE 5001–06–P

DEPARTMENT OF DEFENSE

Office of the Secretary

[Docket ID: DOD–2010–OS–0030]

Privacy Act of 1974; System of Records

AGENCY: Office of the Secretary, DOD.

ACTION: Notice to add a system of records.

SUMMARY: The Office of the Secretary of Defense is proposing to add a system of records notice to its inventory of record systems subject to the Privacy Act of 1974, (5 U.S.C. 552a), as amended.

DATES: This action will be effective without further notice on April 23, 2010 unless comments are received that would result in a contrary determination.

ADDRESSES: You may submit comments, identified by docket number and title, by any of the following methods:

* *Federal Rulemaking Portal: http://www.regulations.gov.* Follow the instructions for submitting comments.

* *Mail:* Federal Docket Management System Office, 1160 Defense Pentagon, Washington, DC 20301–1160.

Instructions: All submissions received must include the agency name and docket number for this **Federal Register** document. The general policy for comments and other submissions from members of the public is to make these submissions available for public viewing on the Internet at *http://www.regulations.gov* as they are received without change, including any personal identifiers or contact information.

FOR FURTHER INFORMATION CONTACT: Ms. Cindy Allard at (703) 588–6830.

SUPPLEMENTARY INFORMATION: The Office of the Secretary of Defense notices for systems of records subject to the Privacy Act of 1974 (5 U.S.C. 552a), as amended, have been published in the **Federal Register** and are available from the Chief, OSD/JS Privacy Office, Freedom of Information Directorate, Washington Headquarters Services, 1155 Defense Pentagon, Washington DC 20301–1155.

The proposed system report, as required by 5 U.S.C. 552a(r) of the Privacy Act of 1974, as amended, was submitted on March 12, 2010, to the House Committee on Government Reform, the Senate Committee on Governmental Affairs, and the Office of Management and Budget (OMB) pursuant to paragraph 4c of Appendix I to OMB Circular No. A–130, "Federal Agency Responsibilities for Maintaining Records About Individuals," dated February 8, 1996 (February 20, 1996; 61 FR 6427).

Dated: March 18, 2010.

Mitchell S. Bryman,

Alternate OSD Federal Register Liaison Officer, Department of Defense.

DPR 39 DoD

SYSTEM NAME:

DoD Personnel Accountability and Assessment System.

SYSTEM LOCATION:

Decentralized locations include the DoD Components staff and field operating agencies, major commands, installations, and activities.

CATEGORIES OF INDIVIDUALS COVERED BY THE SYSTEM:

DoD-affiliated personnel to include: military Service members (active duty, Guard/Reserve and the Coast Guard personnel when operating as a Military Service with the Navy), civilian employees (including non-appropriated fund employees), family members of the above and contractors working at DoD facilities.

CATEGORIES OF RECORDS IN THE SYSTEM:

Subject individual's full name, Social Security Number (SSN), DoD affiliation, date of birth, duty station address and telephone numbers, home and email addresses, and telephone numbers (to include cell number). Emergency Data information may include spouse's name and address; children's names, dates of birth, address and telephone number; parents names, addresses and telephone numbers; or emergency contact's name and address.

The Military Departments may request information to assess the needs of affiliated personnel. Such information may include a needs assessment survey to help determine any specific emergent needs; the date of the assessment; the type of event and category classification; and a Federal Emergency Management Agency (FEMA) number, if issued.

AUTHORITY FOR MAINTENANCE OF THE SYSTEM:

10 U.S.C. 136, Under Secretary of Defense for Personnel and Readiness; 10 U.S.C. 3013, Secretary of the Army; 10 U.S.C. 5013, Secretary of the Navy; 10 U.S.C. 8013, Secretary of the Air Force; DoD Instruction 3001.02, Personnel Accountability in Conjunction with Natural or Manmade Disasters; Air Force Instruction 10–218, Personnel Accountability in conjunction with Natural Disasters or National Emergencies; Army Regulation 500–3, U.S. Army Continuity of Operations Program Policy and Planning; and E.O. 9397 (SSN), as amended.

PURPOSE(S):

To accomplish personnel accountability for DoD affiliated personnel in a natural or man-made disaster or when directed by the Secretary of Defense. This system will document the individual's check-in data.

The Military Departments may also collect information about Service members and their dependents for needs assessment as a result of the natural or man-made disaster.

The DoD Components may also use accountability data for accountability and assessment reporting exercises.

ROUTINE USES OF RECORDS MAINTAINED IN THE SYSTEM, INCLUDING CATEGORIES OF USERS AND THE PURPOSES OF SUCH USES:

In addition to those disclosures generally permitted under 5 U.S.C. 552a(b) of the Privacy Act of 1974, these records may specifically be disclosed outside DoD as a routine use pursuant to 5 U.S.C. 552a(b)(3) as follows:

To Federal, State, or local governments during actual emergencies, exercises or continuity of operations tests for the purpose of responding to emergency situations or to allow emergency service personnel to locate the individual(s).

To Federal Emergency Management Agency to facilitate recovery efforts when natural or manmade disasters occur.

The DoD "Blanket Routine Uses" also apply to this system of records.

POLICIES AND PRACTICES FOR STORING, RETRIEVING, ACCESSING, RETAINING, AND DISPOSING OF RECORDS IN THE SYSTEM:

STORAGE:

Paper records in file folders and on electronic storage media.

RETRIEVABILITY:

Individual's name, Social Security Number (SSN), or date of birth.

SAFEGUARDS:

DoD Components will ensure that paper and electronic records collected and used are maintained in controlled areas accessible only to authorized personnel. Physical security differs from site to site, but the automated records must be maintained in controlled areas accessible only by authorized personnel. Access to computerized data is restricted by use of common access cards (CACs) and passwords. These are "For Official Use Only" records and are maintained in controlled facilities that employ physical restrictions and safeguards such as security guards, identification badges, key cards, and locks.

RETENTION AND DISPOSAL:

Disposition pending. Until the National Archives and Records Administration has approved the retention and disposal of these records, treat them as permanent.

SYSTEM MANAGER AND ADDRESS:

Senior Program Manager for Casualty and Mortuary Affairs, Office of the Under Secretary of Defense (Personnel & Readiness), Deputy Under Secretary of Defense for Military Community and Family Policy, 4000 Defense Pentagon, Washington, DC 20301–4000.

The Privacy Act responsibilities concerning access, amendment, and disclosure of the records within this system notice have been delegated to the employing DoD components.

NOTIFICATION PROCEDURE:

Individuals seeking to determine whether this system of records contains information about themselves should address written inquiries to their employing DoD Component.

The request should include the individual's full name, Social Security Number (SSN), home address, and be signed.

RECORD ACCESS PROCEDURES:

Individuals seeking access to records about themselves contained in this system of records should address written inquiries to their employing DoD Component.

The request should include the individual's full name, Social Security Number (SSN), home address, and be signed.

CONTESTING RECORD PROCEDURES:

Each DoD Component has its own rules for accessing records and for contesting contents and appealing initial agency determinations and can be found in component Privacy Instructions and Regulations; the appropriate part of 32 CFR.

RECORD SOURCE CATEGORIES:

Individual and Defense Manpower Data Center (DEERS database).

EXEMPTIONS:

None.

[FR Doc. 2010–6456 Filed 3–23–10; 8:45 am]

BILLING CODE 5001–06–P

DEPARTMENT OF DEFENSE

Office of the Secretary

[Docket ID: DOD–2010–OS–0029]

Privacy Act of 1974; System of Records

AGENCY: Department of Defense, DoD.

ACTION: Notice to alter a system of records.

SUMMARY: The Office of the Secretary of Defense proposes to alter a system of records in its inventory of record systems subject to the Privacy Act of 1974 (5 U.S.C. 552a), as amended.

DATES: This proposed action would be effective without further notice on April 23, 2010 unless comments are received which result in a contrary determination.

ADDRESSES: You may submit comments, identified by docket number and title, by any of the following methods:

* *Federal Rulemaking Portal: http://www.regulations.gov.* Follow the instructions for submitting comments.

* *Mail:* Federal Docket Management System Office, 1160 Defense Pentagon, Washington, DC 20301–1160.

Instructions: All submissions received must include the agency name and docket number for this **Federal Register** document. The general policy for comments and other submissions from members of the public is to make these submissions available for public viewing on the Internet at *http://www.regulations.gov* as they are received without change, including any personal identifiers or contact information.

FOR FURTHER INFORMATION CONTACT: Ms. Cindy Allard at (703) 588–6830.

SUPPLEMENTARY INFORMATION: The Office of the Secretary of Defense notices for systems of records subject to the Privacy Act of 1974 (5 U.S.C. 552a), as amended, have been published in the **Federal Register** and are available from the Chief, OSD/JS Privacy Office, Freedom of Information Directorate, Washington Headquarters Services, 1155 Defense Pentagon, Washington, DC 20301–1155.

The proposed system report, as required by 5 U.S.C. 552a(r) of the Privacy Act of 1974, as amended, was submitted on March 12, 2010, to the House Committee on Oversight and Government Reform, the Senate Committee on Governmental Affairs, and the Office of Management and Budget (OMB) pursuant to paragraph 4c of Appendix I to OMB Circular No. A–130, "Federal Agency Responsibilities for Maintaining Records About Individuals," dated February 8, 1996 (February 20, 1996; 61 FR 6427).

Dated: March 18, 2010.

Mitchell S. Bryman,

Alternate OSD Federal Register Liaison Officer, Department of Defense.

T7334

Defense Travel System (September 8, 2004; 69 FR 54272).

CHANGES:

Delete system ID number and replace with "DHRA 08 DoD".

* * * * *

SYSTEM LOCATION:

Delete entry and replace with "Central Data Center 1, ServerVault, 1506 Moran Road, Dulles, VA 20166–9306.

Central Data Center 2, Usinternetworking, Inc., One Usi Plaza, Annapolis, MD 21401–7478.

DTS Archive/Management Information System, Defense Manpower Data Center, DoD Center, Monterey Bay, 400 Gigling Road, Seaside, CA 93955–6771."

* * * * *

AUTHORITY FOR MAINTENANCE OF THE SYSTEM:

Delete entry and replace with "5 U.S.C. 5701–5757, Travel, Transportation, and Subsistence; 10 U.S.C. 135, Under Secretary of Defense (Comptroller); 10 U.S.C. 136, Under Secretary of Defense (Personnel and Readiness); DoD Directive 5100.87, Department of Defense Human Resources Activity; 10 U.S.C. 3013, Secretary of the Army; 10 U.S.C. 5013, Secretary of the Navy; 10 U.S.C. 8013, Secretary of the Air Force; DoD Financial Management Regulation 7000.14–R, Vol. 9, Travel Policies and Procedures; DoD Directive 4500.09E, Transportation and Traffic Management; DoD 4500.9–R, Defense Transportation

Regulation, Parts I–V; 41 CFR 300–304, Federal Travel Regulation; Joint Federal Travel Regulation (Vol. 1) (Uniformed Service Members); Joint Travel Regulation (Vol. 2) (DoD Civilian Personnel); and E.O. 9397 (SSN), as amended."

PURPOSE(S):

Delete entry and replace with "To provide a DoD-wide travel management process which will cover all official travel, from pre-travel arrangements to post-travel payments, to include the processing of official travel requests for DoD personnel, and other individuals who travel pursuant to DoD travel orders; to provide for the reimbursement of travel expenses incurred by individuals while traveling on official business; and to create a tracking system whereby DoD can monitor the authorization, obligation, and payment for such travel.

To establish a repository of archived/Management Information System (MIS) travel records which can be used to satisfy reporting requirements; to assist in the planning, budgeting, and allocation of resources for future DoD travel; to conduct oversight operations; to analyze travel, budgetary, or other trends; to detect fraud and abuse; and to respond to authorized internal and external requests for data relating to DoD official travel and travel related services, including premium class travel."

ROUTINE USES OF RECORDS MAINTAINED IN THE SYSTEM, INCLUDING CATEGORIES OF USERS AND THE PURPOSES OF SUCH USES:

Delete entry and replace with "In addition to those disclosures generally permitted under 5 U.S.C. 552a(b) of the Privacy Act of 1974, as amended, these records may specifically be disclosed outside the DoD as a routine use pursuant to 5 U.S.C. 552a(b)(3) as follows:

To Federal and private entities providing travel services for purposes of arranging transportation and lodging for those individuals authorized to travel at government expense on official business.

To the Internal Revenue Service to provide information concerning the pay of travel allowances which are subject to federal income tax.

To banking establishments for the purpose of confirming billing or expense data.

The DoD 'Blanket Routine Uses' set forth at the beginning of the DoD compilation of systems of records notices apply to this system."

STORAGE:

Delete entry and replace with "Electronic storage media."

* * * * *

SAFEGUARDS:

Delete entry and replace with "Records are stored in office buildings protected by guards, controlled screening, use of visitor registers, electronic access, and/or locks. Access to records is limited to individuals who are properly screened and cleared on a need-to-know basis in the performance of their official duties. Passwords, digital signatures, and role-based access are used to control access to the systems data, and procedures are in place to deter and detect browsing and unauthorized access. Physical and electronic access are limited to persons responsible for servicing and authorized to use the record system."

RETENTION AND DISPOSAL:

Delete entry and replace with "Records are maintained for 10 years, 3 months and then destroyed."

SYSTEM MANAGER(S) AND ADDRESS:

Delete entry and replace with "Deputy Director, Defense Travel Management Office, 4601 N. Fairfax Drive, Suite 800, Arlington, VA 22203–1546.

For archived records: Deputy Director, Defense Travel System/Management Information System, Defense Manpower Data Center, 400 Gigling Road, Seaside, CA 93955–6771."

NOTIFICATION PROCEDURE:

Delete entry and replace with "Individuals seeking to determine whether information about themselves is contained in this system of records should address written inquiries to the Deputy Director, Defense Travel Management Office, 4601 N. Fairfax Drive, Suite 800, Arlington, VA 22203–1546 or (for archived records) the Deputy Director, Defense Travel System/Management Information System, Defense Manpower Data Center, 400 Gigling Road, Seaside, CA 93955–6771.

Individuals should provide their full name, Social Security Number (SSN), office or organization where assigned when trip was taken, and dates of travel."

RECORD ACCESS PROCEDURES:

Delete entry and replace with "Individuals seeking access to records about themselves contained in this system of records should address written requests to the Office of the Secretary of Defense/Joint Staff Freedom of Information Act Requester Service Center, 1155 Defense Pentagon, Washington, DC 20301–1155.

Requests must include the name and number of this system of records notice in addition to the individual's full name, Social Security Number (SSN), office or organization where assigned when trip was taken, dates of travel, and be signed by the individual."

CONTESTING RECORD PROCEDURES:

Delete entry and replace with "The Office of the Secretary of Defense rules for accessing records, for contesting contents and appealing initial agency determinations are published in Office of the Secretary of Defense Administrative Instruction 81; 32 CFR part 311; or may be obtained from the System Manager."

* * * * *

DHRA 08 DoD

SYSTEM NAME:

Defense Travel System

SYSTEM LOCATION:

Central Data Center 1, ServerVault, 1506 Moran Road, Dulles, VA 20166–9306.

Central Data Center 2, Usinternetworking, Inc., One Usi Plaza, Annapolis, MD 21401–7478.

DTS Archive/Management Information System, Defense Manpower Data Center, DoD Center, Monterey Bay, 400 Gigling Road, Seaside, CA 93955–6771.

CATEGORIES OF INDIVIDUALS COVERED BY THE SYSTEM:

Department of Defense (DoD) civilian personnel; active, former, and retired military members; Reserve and National Guard personnel; academy nominees, applicants, and cadets; dependents of military personnel; and foreign nationals residing in the United States; and all other individuals in receipt of DoD travel orders.

CATEGORIES OF RECORDS IN THE SYSTEM:

Traveler's name, Social Security Number (SSN), gender, date of birth, e-mail address, Service/Agency, organizational information, mailing address, home address, emergency contact information, duty station information, title/rank, civilian/military status information, travel preferences, frequent flyer information, passport information. Financial information to include government and/or personal charge card account numbers and expiration information, personal checking and/or savings account numbers, government accounting code/budget information. Specific trip information to include travel itineraries

(includes dates of travel) and reservations, trip record number, trip cost estimates, travel vouchers, travel-related receipts, travel document status information, travel budget information, commitment of travel funds, records of actual payment of travel funds, and supporting documentation.

AUTHORITY FOR MAINTENANCE OF THE SYSTEM:

5 U.S.C. 5701–5757, Travel, Transportation, and Subsistence; 10 U.S.C. 135, Under Secretary of Defense (Comptroller); 10 U.S.C. 136, Under Secretary of Defense (Personnel and Readiness); DoD Directive 5100.87, Department of Defense Human Resources Activity; 10 U.S.C. 3013, Secretary of the Army; 10 U.S.C. 5013, Secretary of the Navy; 10 U.S.C. 8013, Secretary of the Air Force; DoD Financial Management Regulation 7000.14–R, Vol. 9, Travel Policies and Procedures; DoD Directive 4500.09E, Transportation and Traffic Management; DoD 4500.9–R, Defense Transportation Regulation, Parts I–V; 41 CFR 300–304, Federal Travel Regulation; Joint Federal Travel Regulation (Vol. 1) (Uniformed Service Members); Joint Travel Regulation (Vol. 2) (DoD Civilian Personnel); and E.O. 9397 (SSN), as amended.

PURPOSE(S):

To provide a DoD-wide travel management process which will cover all official travel, from pre-travel arrangements to post-travel payments, to include the processing of official travel requests for DoD personnel, and other individuals who travel pursuant to DoD travel orders; to provide for the reimbursement of travel expenses incurred by individuals while traveling on official business; and to create a tracking system whereby DoD can monitor the authorization, obligation, and payment for such travel.

To establish a repository of archived/Management Information System (MIS) travel records which can be used to satisfy reporting requirements; to assist in the planning, budgeting, and allocation of resources for future DoD travel; to conduct oversight operations; to analyze travel, budgetary, or other trends; to detect fraud and abuse; and to respond to authorized internal and external requests for data relating to DoD official travel and travel related services, including premium class travel.

ROUTINE USES OF RECORDS MAINTAINED IN THE SYSTEM, INCLUDING CATEGORIES OF USERS AND THE PURPOSES OF SUCH USES:

In addition to those disclosures generally permitted under 5 U.S.C. 552a(b) of the Privacy Act of 1974, as amended, these records may specifically be disclosed outside the DoD as a routine use pursuant to 5 U.S.C. 552a(b)(3) as follows:

To Federal and private entities providing travel services for purposes of arranging transportation and lodging for those individuals authorized to travel at government expense on official business.

To the Internal Revenue Service to provide information concerning the pay of travel allowances which are subject to federal income tax.

To banking establishments for the purpose of confirming billing or expense data.

The DoD 'Blanket Routine Uses' set forth at the beginning of the DoD compilation of systems of records notices apply to this system.

POLICIES AND PRACTICES FOR STORING, RETRIEVING, ACCESSING, RETAINING, AND DISPOSING OF RECORDS IN THE SYSTEM:

STORAGE:

Electronic storage media.

RETRIEVABILITY:

Travel authorization and voucher records are retrieved by the name and/or Social Security Number (SSN) of the individual.

SAFEGUARDS:

Records are stored in office buildings protected by guards, controlled screening, use of visitor registers, electronic access, and/or locks. Access to records is limited to individuals who are properly screened and cleared on a need-to-know basis in the performance of their official duties. Passwords, digital signatures, and role-based access are used to control access to the systems data, and procedures are in place to deter and detect browsing and unauthorized access. Physical and electronic access are limited to persons responsible for servicing and authorized to use the record system.

RETENTION AND DISPOSAL:

Records are maintained for 10 years, 3 months and then destroyed.

SYSTEM MANAGER(S) AND ADDRESS:

Deputy Director, Defense Travel Management Office, 4601 N. Fairfax Drive, Suite 800, Arlington, VA 22203–1546.

For archived records: Deputy Director, Defense Travel System/Management Information System, Defense Manpower Data Center, 400 Gigling Road, Seaside, CA 93955–6771.

NOTIFICATION PROCEDURE:

Individuals seeking to determine whether information about themselves is contained in this system of records should address written inquiries to the Deputy Director, Defense Travel Management Office, 4601 N. Fairfax Drive, Suite 800, Arlington, VA 22203–1546 or (for archived records) the Deputy Director, Defense Travel System/Management Information System, Defense Manpower Data Center, 400 Gigling Road, Seaside, CA 93955–6771.

Individuals should provide their full name, Social Security Number (SSN), office or organization where assigned when trip was taken, and dates of travel.

RECORD ACCESS PROCEDURES:

Individuals seeking access to records about themselves contained in this system of records should address written requests to the Office of the Secretary of Defense/Joint Staff Freedom of Information Act Requester Service Center, 1155 Defense Pentagon, Washington, DC 20301–1155.

Requests must include the name and number of this system of records notice in addition to the individual's full name, Social Security Number (SSN), office or organization where assigned when trip was taken, dates of travel, and be signed by the individual.

CONTESTING RECORD PROCEDURES:

The Office of the Secretary of Defense rules for accessing records, for contesting contents and appealing initial agency determinations are published in Office of the Secretary of Defense Administrative Instruction 81; 32 CFR part 311; or may be obtained from the System Manager.

RECORD SOURCE CATEGORIES:

The individual traveler or other authorized DoD personnel.

EXEMPTIONS CLAIMED FOR THE SYSTEM:

None.

[FR Doc. 2010–6455 Filed 3–23–10; 8:45 am]

BILLING CODE 5001–06–P

DEPARTMENT OF DEFENSE

Department of the Army

Availability for Non-Exclusive, Exclusive, or Partially Exclusive Licensing of U.S. Provisional Patent Application Concerning Medical Delivery System

AGENCY: Department of the Army, DoD.

ACTION: Notice.

SUMMARY: Announcement is made of the availability for licensing of the invention set forth in U.S. Provisional Patent Application Serial No. 61/

312,908 entitled "Medical Delivery System," filed March 11, 2010. The United States Government, as represented by the Secretary of the Army, has rights to this invention.

ADDRESSES: Commander, U.S. Army Medical Research and Materiel Command, ATTN: Command Judge Advocate, MCMR–JA, 504 Scott Street, Fort Detrick, Frederick, MD 21702–5012.

FOR FURTHER INFORMATION CONTACT: For patent issues, Ms. Elizabeth Arwine, Patent Attorney, (301) 619–7808. For licensing issues, Dr. Paul Mele, Office of Research and Technology Assessment, (301) 619–6664, both at telefax (301) 619–5034.

SUPPLEMENTARY INFORMATION: The invention relates generally to fluid delivery systems, and specifically to a mechanical coding assembly for use in medical delivery systems.

Brenda S. Bowen,

Army Federal Register Liaison Officer.

[FR Doc. 2010–6461 Filed 3–23–10; 8:45 am]

BILLING CODE 3710–08–P

DEPARTMENT OF ENERGY

Energy Information Administration

Agency Information Collection Activities: Proposed Collection; Comment Request

AGENCY: U.S. Energy Information Administration (EIA), Department of Energy (DOE).

ACTION: Agency information collection activities: Proposed collection; comment request.

SUMMARY: The EIA is soliciting comments on a proposed three-year extension and revision to Form EIA–1605, "Voluntary Reporting of Greenhouse Gases.".

DATES: Comments must be submitted by May 24, 2010, to the addresses listed below.

ADDRESSES: Send all comments to the attention of Paul F. McArdle. To ensure receipt of the comments by the due date, submission by e-mail (*paul.mcardle@eia.doe.gov*) or FAX (202–586–3045) is recommended. Comments submitted by mail should be sent to Paul F. McArdle, U.S. Department of Energy, Energy Information Administration, EI–81, 1000 Independence Avenue, SW., Washington, DC 20585. Questions on this action should be directed to Paul F. McArdle at 202–586–4445 or *paul.mcardle@eia.doe.gov.*

FOR FURTHER INFORMATION CONTACT: Requests for additional information or copies of the revised reporting form and instructions should be directed to Paul F. McArdle at 202–586–4445 or *paul.mcardle@eia.doe.gov.* The revised version of the Form EIA–1605, "Voluntary Reporting of Greenhouse Gases," and instructions, can also be downloaded from the Program's website at *http://www.eia.doe.gov/oiaf/1605/omb2010.html.*

SUPPLEMENTARY INFORMATION:

I. Background
II. Current Actions
III. Request for Comments

I. Background

Voluntary Reporting of Greenhouse Gases Program collections are conducted pursuant to Section 1605(b) of the Energy Policy Act of 1992 (Pub. L. 102–486, 42 U.S.C. 13385) under revised General and Technical Guidelines issued by the DOE's Office of Policy and International Affairs in April 2006 and April 2007, respectively. The EIA–1605 form is designed to collect voluntarily reported data on greenhouse gas emissions, achieved reductions of these emissions, and increased carbon fixation. A summary of the initial results of the Voluntary Reporting of Greenhouse Gases Program under the revised program guidelines will appear in the Program's annual report titled Voluntary Reporting of Greenhouse Gases. Later this year, once it is available, EIA will post the annual report on the program's webpage at *http://www.eia.doe.gov/oiaf/1605/index.html.* For annual reports issued under the original program guidelines go to *http://www.eia.doe.gov/oiaf/1605/1605b_old.html.* Additionally, EIA produces and makes publicly available, a "public-use" database containing all the non-confidential information reported to EIA's Voluntary Reporting of Greenhouse Gases Program on the Forms EIA–1605. Once these data are finalized, EIA will make them available at the program's Web page (*http://www.eia.doe.gov/oiaf/1605/index.html*). Data submitted under the original program, meanwhile, is also available on the program's webpage (*http://www.eia.doe.gov/oiaf/1605/OldDatabases.html*).

The EIA, as part of its effort to comply with the Paperwork Reduction Act of 1995 (Pub. L. 104–13, 44 U.S.C. Chapter 35), provides the general public and other Federal agencies with opportunities to comment on collections of information conducted by or in conjunction with the EIA. Any comments received help the EIA to prepare data requests that maximize the utility of the information collected and to assess the impact of collection requirements on the public. Also, the EIA will later seek approval by the Office of Management and Budget (OMB) under Section 3507(a) of the Paperwork Reduction Act of 1995.

II. Current Actions

As a result of the experience gained in the implementation of the first reporting cycle under the revised guidelines launched on November 18, 2009, the EIA plans to slightly revise Form EIA–1605 and the accompanying instructions. These revisions fall into the following three categories: Caption/instruction changes, grid changes, and changes to the form designed to bring greater conformity between the paper form and the electronic form used by respondents via EIA's Internet Survey Management System (ISMS). Summaries of the three types of changes are provided below. Note, that in the proposed revised forms posted on EIA's webpage (*http://www.eia.doe.gov/oiaf/1605/omb2010.html*). EIA will highlight sections of the forms that have been revised.

Caption/Instruction Changes

EIA has made contextual changes to the captions and explanatory text in Schedule I, Schedule II, Schedule III and Schedule IV in order to provide respondents with effective guidance for properly completing both the paper and electronic versions of the form. These changes were made in response to usability testing as well as internal review. Changes have also been made to correct errors, including typos, in the previously approved forms.

Emissions Inventory Grid Changes

EIA has modified the emissions inventory grids in Schedule I, Section 2, Part B and Addendum A to include two additional columns with the captions "Fuel Type" and "Specific Facility/Source Name (optional)". These columns are needed in order to disaggregate the estimation methods and associated ratings reported on the electronic form and, therefore, allow the system to calculate a weighted rating of the emission inventory methods used by respondents. EIA also revised some of the emission sources listed in the inventory grids to align them with the sources and methods identified in the Technical Guidelines.

Changes To Accommodate the Electronic Form

EIA has modified several existing questions and added a few additional questions to Schedule I and II to bring

the paper form into conformity with the electronic version of Form EIA–1605. These changes reflect the fact that certain questions and question/sequences in the electronic version of the form are necessary in order to activate only those sections of the electronic form that the respondent needs to fill out. The changes are also intended to reduce the burden of reporting using the electronic software and improve usability. The affected questions can be found in: Schedule I, Section 1, Questions 3b, 3d, 3e, Question 4, and Question 7; Schedule I, Section 4, Questions 1, 2, 3, 4; Schedule II, Section 3, Questions 1, 2; and in Addendum B2, Part A, Questions 3 and 4 will be deleted.

Please refer to the revised version of the form and instructions for more information about the purpose, who may report, when to report, where to submit, the elements to be reported, instructions for reporting, provisions for confidentiality, and uses (including possible nonstatistical uses) of the information (*http://www.eia.doe.gov/oiaf/1605/omb2010.html*). For instructions on obtaining materials, see the **FOR FURTHER INFORMATION CONTACT:** section.

III. Request for Comments

Prospective respondents and other interested parties should comment on the actions discussed in item II. The following issues are provided to assist in the preparation of comments.

As a Potential Respondent to the Request for Information

A. Is the proposed collection of information necessary for the proper performance of the functions of the agency and does the information have practical utility?

B. What actions could be taken to help ensure and maximize the quality, objectivity, utility, and integrity of the information to be collected?

C. Are the instructions and definitions clear and sufficient? If not, which instructions need clarification?

D. Can the information be submitted by the respondent by the due date?

E. Public reporting burden for this collection is estimated to average 60 hours per response. The estimated burden includes the total time necessary to provide the requested information. In your opinion, how accurate is this estimate?

F. The agency estimates that the only cost to a respondent is for the time it will take to complete the collection. Will a respondent incur any start-up costs for reporting, or any recurring annual costs for operation, maintenance, and purchase of services associated with the information collection?

G. What additional actions could be taken to minimize the burden of this collection of information? Such actions may involve the use of automated, electronic, mechanical, or other technological collection techniques or other forms of information technology.

H. Does any other Federal, State, or local agency collect similar information? If so, specify the agency, the data element(s), and the methods of collection.

As a Potential User of the Information To Be Collected

A. Is the proposed collection of information necessary for the proper performance of the functions of the agency and does the information have practical utility?

B. What actions could be taken to help ensure and maximize the quality, objectivity, utility, and integrity of the information disseminated?

C. Is the information useful at the levels of detail to be collected?

D. For what purpose(s) would the information be used? Be specific.

E. Are there alternate sources for the information and are they useful? If so, what are their weaknesses and/or strengths?

Comments submitted in response to this notice will be summarized and/or included in the request for OMB approval of the form. They also will become a matter of public record.

Statutory Authority: Section 13(b) of the Federal Energy Administration Act of 1974, Pub. L. 93–275, codified at 15 U.S.C. 772(b).

Issued in Washington, DC, March 17, 2010.

Stephanie Brown,

Director, Statistics and Methods Group, Energy Information Administration.

[FR Doc. 2010–6464 Filed 3–23–10; 8:45 am]

BILLING CODE 6450–01–P

DEPARTMENT OF ENERGY

Federal Energy Regulatory Commission

Combined Notice of Filings #1

March 17, 2010.

Take notice that the Commission received the following electric rate filings:

Docket Numbers: ER99–2416–000.
Applicants: El Paso Electric Company.
Description: El Paso Electric Company submits its absence of market-based rate authority outside its balancing authority area and outside of the southern New Mexico area.
Filed Date: 03/08/2010.
Accession Number: 20100315–0082.
Comment Date: 5 p.m. Eastern Time on Monday, March 29, 2010.

Docket Numbers: ER00–3562–014; ER02–1367–009; ER06–753–007.
Applicants: Calpine Energy Services, L.P.; Calpine Oneta Power, LP; CPN Pryor Funding Corporation.
Description: Updated market power analysis of Calpine Corporation.
Filed Date: 03/16/2010.
Accession Number: 20100317–0209.
Comment Date: 5 p.m. Eastern Time on Monday, May 17, 2010.

Docket Numbers: ER01–1527–000; ER01–1529–000.
Applicants: Sierra Pacific Power Company; Nevada Power Company.
Description: NV Energy submits updated market power study for the Southwest region.
Filed Date: 03/08/2010.
Accession Number: 20100315–0086.
Comment Date: 5 p.m. Eastern Time on Friday, May 07, 2010.

Docket Numbers: ER10–343–001.
Applicants: PJM Interconnection, L.L.C.
Description: PJM Interconnection, LLC submits a revised interconnection service agreement.
Filed Date: 03/15/2010.
Accession Number: 20100316–0209.
Comment Date: 5 p.m. Eastern Time on Monday, April 05, 2010.

Docket Numbers: ER10–508–001.
Applicants: Nevada Power Company.
Description: Nevada Power Company submits compliance filing revising Paragraphs 2 and 4 in Appendix C of its Interconnection Agreement with El Dorado Energy, LLC.
Filed Date: 03/15/2010.
Accession Number: 20100316–0210.
Comment Date: 5 p.m. Eastern Time on Monday, April 05, 2010.

Docket Numbers: ER10–735–001.
Applicants: S.J. Energy Partners, Inc.
Description: S.J. Energy Partners, Inc submits revised Petition for Acceptance of Initial Tariff, Waivers Authorization.
Filed Date: 03/15/2010.
Accession Number: 20100315–0154.
Comment Date: 5 p.m. Eastern Time on Monday, April 05, 2010.

Docket Numbers: ER10–716–001.
Applicants: Algonquin Power Windsor Locks LLC.
Description: Algonquin Power Windsor Locks LLC submits supplement to its application for Order accepting rates for filing and granting waivers and blanket approvals filed 2/5/2010.
Filed Date: 03/16/2010.
Accession Number: 20100317–0212.
Comment Date: 5 p.m. Eastern Time on Tuesday, April 06, 2010.

Docket Numbers: ER10–881–000.
Applicants: Reliable Power, LLC.
Description: Reliable Power, LLC submits application for authorization to make wholesale sales of energy, *et al.*
Filed Date: 03/16/2010.
Accession Number: 20100316–0211.
Comment Date: 5 p.m. Eastern Time on Tuesday, April 06, 2010.

Docket Numbers: ER10–893–000
Applicants: PJM Interconnection, L.L.C.
Description: PJM Interconnection, LLC submits revised tariff sheets of the PJM Open Access Transmission Tariff and Amended and Restated Operating Agreement.
Filed Date: 03/16/2010.
Accession Number: 20100317–0204.
Comment Date: 5 p.m. Eastern Time on Tuesday, April 06, 2010.

Docket Numbers: ER10–894–000.
Applicants: RRI Energy Solutions East, LLC.
Description: RRI Energy Solutions East, LLC submits its Notice of Cancellation of its market-based rate tariff designated as Rate Schedule FERC No 1 Second Revised Volume 1 *etc.*
Filed Date: 03/16/2010.
Accession Number: 20100317–0201.
Comment Date: 5 p.m. Eastern Time on Tuesday, April 06, 2010.

Docket Numbers: ER10–895–000.
Applicants: The Detroit Edison Company.
Description: The Detroit Edison Company submits a Notice of Cancellation respecting the Power Supply Agreement with the City of Detroit, Michigan dated 10/23/91 as amended FERC Electric Tariff, Original Volume 4 *etc.*
Filed Date: 03/16/2010.
Accession Number: 20100317–0202.
Comment Date: 5 p.m. Eastern Time on Tuesday, April 06, 2010.

Docket Numbers: ER10–896–000.
Applicants: Duke Energy Carolinas, LLC.
Description: Duke Energy Carolinas, LLC submits a Network Integration Transmission Service Agreements for Network Integration Transmission Service with Town of Highlands, NC.
Filed Date: 03/16/2010.
Accession Number: 20100317–0203.
Comment Date: 5 p.m. Eastern Time on Tuesday, April 06, 2010.

Docket Numbers: ER10–897–000.
Applicants: Southwest Power Pool, Inc.
Description: Southwest Power Pool, Inc submits revised pages to its Open Access Transmission Tariff intended to implement rate changes for Mid-Kansas, which is a transmission owner and pricing zone under the SPP Tariff.
Filed Date: 03/16/2010.
Accession Number: 20100317–0210.
Comment Date: 5 p.m. Eastern Time on Tuesday, April 06, 2010.

Take notice that the Commission received the following electric securities filings:

Docket Numbers: ES10–30–000.
Applicants: Southern Indiana Gas & Electric Company.
Description: Application of Southern Indiana Gas and Electric Company for Authority to Issue Short-Term Debt.
Filed Date: 03/17/2010.
Accession Number: 20100317–5024.
Comment Date: 5 p.m. Eastern Time on Wednesday, April 07, 2010.

Take notice that the Commission received the following electric reliability filings:

Docket Numbers: RR10–8–000.
Applicants: North American Electric Reliability Corp.
Description: Petition of the North American Electric Reliability Corporation for Approval of Amendments to Rules of Procedure Regarding Compliance and Certification Committee Program and for Approval of Amended CCC Charter.
Filed Date: 03/15/2010.
Accession Number: 20100315–5238.
Comment Date: 5 p.m. Eastern Time on Wednesday, April 14, 2010.

Any person desiring to intervene or to protest in any of the above proceedings must file in accordance with Rules 211 and 214 of the Commission's Rules of Practice and Procedure (18 CFR 385.211 and 385.214) on or before 5 p.m. Eastern time on the specified comment date. It is not necessary to separately intervene again in a subdocket related to a compliance filing if you have previously intervened in the same docket. Protests will be considered by the Commission in determining the appropriate action to be taken, but will not serve to make protestants parties to the proceeding. Anyone filing a motion to intervene or protest must serve a copy of that document on the Applicant. In reference to filings initiating a new proceeding, interventions or protests submitted on or before the comment deadline need not be served on persons other than the Applicant.

The Commission encourages electronic submission of protests and interventions in lieu of paper, using the FERC Online links at *http://www.ferc.gov.* To facilitate electronic service, persons with Internet access who will eFile a document and/or be listed as a contact for an intervenor must create and validate an eRegistration account using the eRegistration link. Select the eFiling link to log on and submit the intervention or protests.

Persons unable to file electronically should submit an original and 14 copies of the intervention or protest to the Federal Energy Regulatory Commission, 888 First St. NE., Washington, DC 20426.

The filings in the above proceedings are accessible in the Commission's eLibrary system by clicking on the appropriate link in the above list. They are also available for review in the Commission's Public Reference Room in Washington, DC. There is an eSubscription link on the Web site that enables subscribers to receive e-mail notification when a document is added to a subscribed dockets(s). For assistance with any FERC Online service, please e-mail *FERCOnlineSupport@ferc.gov.* or call (866) 208–3676 (toll free). For TTY, call (202) 502–8659.

Nathaniel J. Davis, Sr.,
Deputy Secretary.

[FR Doc. 2010–6482 Filed 3–23–10; 8:45 am]
BILLING CODE 6717–01–P

DEPARTMENT OF ENERGY

Federal Energy Regulatory Commission

Combined Notice of Filings

March 12, 2010.

Take notice that the Commission has received the following Natural Gas Pipeline Rate and Refund Report filings:

Docket Numbers: RP08–463–002.
Applicants: Enbridge Offshore Pipelines (UTOS) LLC.
Description: Request of Enbridge Offshore Pipelines (UTOS) LLC for an extension of time.
Filed Date: 02/02/2010.
Accession Number: 20100202–5163.
Comment Date: 5 p.m. Eastern Time on Wednesday, March 17, 2010.

Docket Numbers: RP08–464–002.
Applicants: Stingray Pipeline Company, L.L.C.
Description: Request for an extension of time of Stingray Pipeline Company, L.L.C.
Filed Date: 02/02/2010.
Accession Number: 20100202–5164.
Comment Date: 5 p.m. Eastern Time on Wednesday, March 17, 2010.

Docket Numbers: RP08–465–002.
Applicants: Nautilus Pipeline Company, L.L.C.
Description: Request for an extension of time of Nautilus Pipeline Company, L.L.C.
Filed Date: 02/02/2010.

Accession Number: 20100202–5162.

Comment Date: 5 p.m. Eastern Time on Wednesday, March 17, 2010.

Docket Numbers: RP08–461–001.

Applicants: Garden Banks Gas Pipeline, LLC.

Description: Request of Garden Banks Gas Pipeline, LLC for an extension of time to implement an electronic short-term capacity release posting and bidding system pursuant to Order 712.

Filed Date: 02/04/2010.

Accession Number: 20100204–5093.

Comment Date: 5 p.m. Eastern Time on Wednesday, March 17, 2010.

Docket Numbers: RP08–466–001.

Applicants: Mississippi Canyon Gas Pipeline, L.L.C.

Description: Request of Mississippi Canyon Gas Pipeline, LLC for an extension of time to implement an electronic short-term capacity release posting and bidding system pursuant to Order 712.

Filed Date: 02/04/2010.

Accession Number: 20100204–5094.

Comment Date: 5 p.m. Eastern Time on Wednesday, March 17, 2010.

Any person desiring to protest this filing must file in accordance with Rule 211 of the Commission's Rules of Practice and Procedure (18 CFR 385.211). Protests to this filing will be considered by the Commission in determining the appropriate action to be taken, but will not serve to make protestants parties to the proceeding. Such protests must be filed on or before 5 p.m. Eastern Time on the specified comment date. Anyone filing a protest must serve a copy of that document on all the parties to the proceeding.

The Commission encourages electronic submission of protests in lieu of paper using the "eFiling" link at *http://www.ferc.gov.* Persons unable to file electronically should submit an original and 14 copies of the protest to the Federal Energy Regulatory Commission, 888 First Street, NE., Washington, DC 20426.

This filing is accessible on-line at *http://www.ferc.gov,* using the "eLibrary" link and is available for review in the Commission's Public Reference Room in Washington, DC. There is an "eSubscription" link on the Web site that enables subscribers to receive email notification when a document is added to a subscribed docket(s). For assistance with any FERC Online service, please email *FERCOnlineSupport@ferc.gov,* or call (866) 208–3676 (toll free). For TTY, call (202) 502–8659.

Nathaniel J. Davis, Sr.,

Deputy Secretary.

[FR Doc. 2010–6484 Filed 3–23–10; 8:45 am]

BILLING CODE 6717–01–P

DEPARTMENT OF ENERGY

Federal Energy Regulatory Commission

Combined Notice of Filings

March 8, 2010.

Take notice that the Commission has received the following Natural Gas Pipeline Rate and Refund Report filings:

Docket Numbers: RP10–393–000.

Applicants: Energy West Development, Inc.

Description: Energy West Development, Inc submits Second Revised Sheet 1 *et al* to FERC Gas Tariff, Volume 1, to be effective 3/26/10.

Filed Date: 02/24/2010.

Accession Number: 20100225–0202.

Comment Date: 5 p.m. Eastern Time on Thursday, March 11, 2010.

Docket Numbers: RP10–412–000.

Applicants: Northwest Pipeline GP.

Description: Northwest Pipeline GP submits Sixth Revised Sheet 14 to its FERC Gas Tariff, Fourth Revised Volume 1 to be effective 4/1/10.

Filed Date: 02/26/2010.

Accession Number: 20100305–0212.

Comment Date: 5 p.m. Eastern Time on Thursday, March 11, 2010.

Docket Numbers: RP10–420–000.

Applicants: Guardian Pipeline, LLC.

Description: Guardian Pipeline, LLC submits Twenty-Fourth Revised Sheet 5 *et al* to its FERC Gas Tariff, Original Volume 1, to be effective 4/1/10.

Filed Date: 02/26/2010.

Accession Number: 20100301–0046.

Comment Date: 5 p.m. Eastern Time on Thursday, March 11, 2010.

Docket Numbers: RP10–470–000.

Applicants: CenterPoint Energy Gas Transmission Company.

Description: CenterPoint Energy Gas Transmission Company submits amended negotiated rate agreements between CEGT and shippers.

Filed Date: 03/01/2010.

Accession Number: 20100304–0211.

Comment Date: 5 p.m. Eastern Time on Monday, March 15, 2010.

Docket Numbers: RP10–471–000.

Applicants: CenterPoint Energy Gas Transmission Company.

Description: CenterPoint Energy Gas Transmission Company submits amended Rate Schedule FT negotiated rate agreements between CEGT and Petrohawk.

Filed Date: 03/01/2010.

Accession Number: 20100304–0212.

Comment Date: 5 p.m. Eastern Time on Monday, March 15, 2010.

Docket Numbers: RP10–472–000.

Applicants: KO Transmission Company.

Description: KO Transmission Company submits Twenty-seventh Revised Sheet No. 10 to its FERC Gas Tariff, Original Volume 1, to be effective 4/1/2010.

Filed Date: 03/04/2010.

Accession Number: 20100304–0213.

Comment Date: 5 p.m. Eastern Time on Tuesday, March 16, 2010.

Docket Numbers: RP10–473–000.

Applicants: Northwest Pipeline GP.

Description: Northwest Pipeline GP submits the Sixth Revised Sheet No. 395 to FERC Gas Tariff, Fourth Revised Volume No. 1, to be effective 4/3/10.

Filed Date: 03/04/2010.

Accession Number: 20100305–0201.

Comment Date: 5 p.m. Eastern Time on Tuesday, March 16, 2010.

Docket Numbers: RP10–474–000.

Applicants: Rockies Express Pipeline LLC.

Description: Rockies Express Pipeline LLC submits Third Revised Sheet No. 1 *et al* to FERC Gas Tariff, Second Revised Volume No. 1, to be effective 4/5/10.

Filed Date: 03/05/2010.

Accession Number: 20100305–0216.

Comment Date: 5 p.m. Eastern Time on Wednesday, March 17, 2010.

Docket Numbers: RP10–475–000.

Applicants: Nautilus Pipeline Company, L.L.C.

Description: Nautilus Pipeline Company, LLC submits submit Fourth Revised Sheet No 0 *et al* to FERC Gas Tariff, Original Volume No 1 to be effective 4/5/10.

Filed Date: 03/05/2010.

Accession Number: 20100305–0218.

Comment Date: 5 p.m. Eastern Time on Wednesday, March 17, 2010.

Docket Numbers: RP10–476–000.

Applicants: Transwestern Pipeline Company, LLC.

Description: Transwestern Pipeline Company, LLC submits Sixth Revised Sheet No. 1 *et al* to FERC Gas Tariff, Third Revised Volume No. 1, to be effective 4/5/10.

Filed Date: 03/05/2010.

Accession Number: 20100305–0217.

Comment Date: 5 p.m. Eastern Time on Wednesday, March 17, 2010.

Docket Numbers: RP10–477–000.

Applicants: Dominion Transmission, Inc.

Description: Dominion Transmission, Inc submits Second Revised Sheet No. 1050 *et al* to FERC Gas Tariff, Third

Revised Volume No. 1, to be effective 4/5/10.

Filed Date: 03/05/2010.

Accession Number: 20100305–0229.

Comment Date: 5 p.m. Eastern Time on Wednesday, March 17, 2010.

Any person desiring to intervene or to protest in any of the above proceedings must file in accordance with Rules 211 and 214 of the Commission's Rules of Practice and Procedure (18 CFR 385.211 and 385.214) on or before 5 p.m. Eastern time on the specified comment date. It is not necessary to separately intervene again in a subdocket related to a compliance filing if you have previously intervened in the same docket. Protests will be considered by the Commission in determining the appropriate action to be taken, but will not serve to make protestants parties to the proceeding. Anyone filing a motion to intervene or protest must serve a copy of that document on the Applicant. In reference to filings initiating a new proceeding, interventions or protests submitted on or before the comment deadline need not be served on persons other than the Applicant.

The Commission encourages electronic submission of protests and interventions in lieu of paper, using the FERC Online links at *http://www.ferc.gov.* To facilitate electronic service, persons with Internet access who will eFile a document and/or be listed as a contact for an intervenor must create and validate an eRegistration account using the eRegistration link. Select the eFiling link to log on and submit the intervention or protests.

Persons unable to file electronically should submit an original and 14 copies of the intervention or protest to the Federal Energy Regulatory Commission, 888 First St. NE., Washington, DC 20426.

The filings in the above proceedings are accessible in the Commission's eLibrary system by clicking on the appropriate link in the above list. They are also available for review in the Commission's Public Reference Room in Washington, DC. There is an eSubscription link on the Web site that enables subscribers to receive e-mail notification when a document is added to a subscribed dockets(s). For assistance with any FERC Online service, please e-mail *FERCOnlineSupport@ferc.gov.* or call (866) 208–3676 (toll free). For TTY, call (202) 502–8659.

Nathaniel J. Davis, Sr.,

Deputy Secretary.

[FR Doc. 2010–6485 Filed 3–23–10; 8:45 am]

BILLING CODE 6717–01–P

DEPARTMENT OF ENERGY

Federal Energy Regulatory Commission

Combined Notice of Filings

March 15, 2010.

Take notice that the Commission has received the following Natural Gas Pipeline Rate and Refund Report filings:

Docket Numbers: RP04–274–000.

Applicants: Kern River Gas Transmission Company, Kern River Gas Transmission Company.

Description: Motion of Kern River Gas Transmission Company for Expedited Order Authorizing Provisional Payment of Refunds and Implementation of Reduced Billing Rates.

Filed Date: 03/05/2010.

Accession Number: 20100305–5153.

Comment Date: 5 p.m. Eastern Time on Wednesday, March 17, 2010.

Docket Numbers: RP10–484–000.

Applicants: T.W. Phillips Pipeline Corporation.

Description: Request for Waiver of T.W. Phillips Pipeline Corporation, Request for Waiver of Tariff Provision.

Filed Date: 03/10/2010.

Accession Number: 20100310–5070.

Comment Date: 5 p.m. Eastern Time on Monday, March 22, 2010.

Docket Numbers: RP10–485–000.

Applicants: Tennessee Gas Pipeline Company.

Description: Tennessee Gas Pipeline Company submits negotiated Rate Firm Transportation Arrangement with Calpine Energy Services LP to be effective 3/1/2010.

Filed Date: 03/10/2010.

Accession Number: 20100311–0001.

Comment Date: 5 p.m. Eastern Time on Monday, March 22, 2010.

Docket Numbers: RP10–486–000.

Applicants: Tennessee Gas Pipeline Company.

Description: Tennessee Gas Pipeline Company submits a negotiated rate firm transportation arrangement with Calpine Energy Services LP.

Filed Date: 03/10/2010.

Accession Number: 20100311–0002.

Comment Date: 5 p.m. Eastern Time on Monday, March 22, 2010.

Docket Numbers: RP10–487–000.

Applicants: Pacific Gas and Electric Company.

Description: Pacific Gas and Electric Company submits the 2009 Annual Report pursuant to 18 CFR Section 284.224.

Filed Date: 03/11/2010.

Accession Number: 20100312–0207.

Comment Date: 5 p.m. Eastern Time on Tuesday, March 23, 2010.

Docket Numbers: RP10–488–000.

Applicants: Questar Pipeline Company.

Description: Questar Pipeline Company submits Ninth Revised Sheet 8 to its FERC Gas Tariff, First Revised Volume 1 to be effective 4/12/10.

Filed Date: 03/12/2010.

Accession Number: 20100312–0208.

Comment Date: 5 p.m. Eastern Time on Wednesday, March 24, 2010.

Any person desiring to intervene or to protest in any of the above proceedings must file in accordance with Rules 211 and 214 of the Commission's Rules of Practice and Procedure (18 CFR 385.211 and § 385.214) on or before 5 p.m. Eastern time on the specified comment date. It is not necessary to separately intervene again in a subdocket related to a compliance filing if you have previously intervened in the same docket. Protests will be considered by the Commission in determining the appropriate action to be taken, but will not serve to make protestants parties to the proceeding. Anyone filing a motion to intervene or protest must serve a copy of that document on the Applicant. In reference to filings initiating a new proceeding, interventions or protests submitted on or before the comment deadline need not be served on persons other than the Applicant.

The Commission encourages electronic submission of protests and interventions in lieu of paper, using the FERC Online links at *http://www.ferc.gov.* To facilitate electronic service, persons with Internet access who will eFile a document and/or be listed as a contact for an intervenor must create and validate an eRegistration account using the eRegistration link. Select the eFiling link to log on and submit the intervention or protests.

Persons unable to file electronically should submit an original and 14 copies of the intervention or protest to the Federal Energy Regulatory Commission, 888 First St. NE., Washington, DC 20426.

The filings in the above proceedings are accessible in the Commission's eLibrary system by clicking on the appropriate link in the above list. They are also available for review in the Commission's Public Reference Room in Washington, DC. There is an eSubscription link on the Web site that enables subscribers to receive e-mail notification when a document is added to a subscribed dockets(s). For assistance with any FERC Online service, please e-mail *FERCOnlineSupport@ferc.gov.* or call

(866) 208–3676 (toll free). For TTY, call (202) 502–8659.

Nathaniel J. Davis, Sr.,

Deputy Secretary.

[FR Doc. 2010–6483 Filed 3–23–10; 8:45 am]

BILLING CODE 6717–01–P

DEPARTMENT OF ENERGY

Southeastern Power Administration

Proposed Rate Adjustment, Public Forum, and Opportunities for Public Review and Comment for Georgia-Alabama-South Carolina System of Projects

AGENCY: Southeastern Power Administration, DOE.

ACTION: Notice to change date and location of the Public Information and Comment Forum.

SUMMARY: On March 17, 2010, Southeastern Power Administration (Southeastern) published notice of proposed rate for the sale of power from the Georgia-Alabama-South Carolina System of Projects (75 FR 12740). The notice established the date and time of the Public Information and Comment Forum as 10 a.m. on April 29, 2010. The address of the forum was established as the Sheraton Gateway Atlanta Airport. Southeastern is changing the date of the Public Information and Comment Forum to 2 p.m. on April 27, 2010. Southeastern is changing the address of the forum to Atlanta Airport Hilton, 1031 Virginia Avenue, Atlanta, GA 30354, Phone (404) 767–9000.

DATES: The Public Information and Comment Forum will be held in Atlanta, Georgia, at 2 p.m. on April 27, 2010.

ADDRESSES: The Public Information and Comment Forum will be at the Atlanta Airport Hilton, 1031 Virginia Avenue, Atlanta, GA 30354, Phone (404) 767–9000.

Dated: March 22, 2010.

Kenneth E. Legg,

Administrator.

[FR Doc. 2010–6527 Filed 3–23–10; 8:45 am]

BILLING CODE 6450–01–P

ENVIRONMENTAL PROTECTION AGENCY

[EPA–HQ–OPPT–2009–0929; FRL–8806–1]

Agency Information Collection Activities; Proposed Collection; Comment Request; Request for Contractor Access to TSCA CBI; EPA ICR No. 1250.09, OMB Control No. 2070–0075

AGENCY: Environmental Protection Agency (EPA).

ACTION: Notice.

SUMMARY: In compliance with the Paperwork Reduction Act (PRA) (44 U.S.C. 3501 *et seq.*), this document announces that EPA is planning to submit a request to renew an existing approved Information Collection Request (ICR) to the Office of Management and Budget (OMB). This ICR, entitled: "Request for Contractor Access to TSCA CBI" and identified by EPA ICR No. 1250.09 and OMB Control No. 2070–0075, is scheduled to expire on November 30, 2010. Before submitting the ICR to OMB for review and approval, EPA is soliciting comments on specific aspects of the information collection.

DATES: Comments must be received on or before May 24, 2010.

ADDRESSES: Submit your comments, identified by docket identification (ID) number EPA–HQ–OPPT–2009–0929, by one of the following methods:

• *Federal eRulemaking Portal*: *http://www.regulations.gov*. Follow the on-line instructions for submitting comments.

• *Mail*: Document Control Office (7407M), Office of Pollution Prevention and Toxics (OPPT), Environmental Protection Agency, 1200 Pennsylvania Ave., NW., Washington, DC 20460–0001.

• *Hand Delivery*: OPPT Document Control Office (DCO), EPA East, Rm. 6428, 1201 Constitution Ave., NW., Washington, DC. Attention: Docket ID Number EPA–HQ–OPPT–2009–0929. The DCO is open from 8 a.m. to 4 p.m., Monday through Friday, excluding legal holidays. The telephone number for the DCO is (202) 564–8930. Such deliveries are only accepted during the DCO's normal hours of operation, and special arrangements should be made for deliveries of boxed information.

Instructions: Direct your comments to docket ID number EPA–HQ–OPPT–2009–0929. EPA's policy is that all comments received will be included in the docket without change and may be made available on-line at *http://www.regulations.gov*, including any personal information provided, unless the comment includes information claimed to be Confidential Business Information (CBI) or other information whose disclosure is restricted by statute. Do not submit information that you consider to be CBI or otherwise protected through regulations.gov or e-mail. The regulations.gov website is an "anonymous access" system, which means EPA will not know your identity or contact information unless you provide it in the body of your comment. If you send an e-mail comment directly to EPA without going through regulations.gov, your e-mail address will be automatically captured and included as part of the comment that is placed in the docket and made available on the Internet. If you submit an electronic comment, EPA recommends that you include your name and other contact information in the body of your comment and with any disk or CD-ROM you submit. If EPA cannot read your comment due to technical difficulties and cannot contact you for clarification, EPA may not be able to consider your comment. Electronic files should avoid the use of special characters, any form of encryption, and be free of any defects or viruses.

Docket: All documents in the docket are listed in the docket index available at *http://www.regulations.gov*. Although listed in the index, some information is not publicly available, e.g., CBI or other information whose disclosure is restricted by statute. Certain other material, such as copyrighted material, will be publicly available only in hard copy. Publicly available docket materials are available electronically at *http://www.regulations.gov*, or, if only available in hard copy, at the OPPT Docket. The OPPT Docket is located in the EPA Docket Center (EPA/DC) at Rm. 3334, EPA West Bldg., 1301 Constitution Ave., NW., Washington, DC. The EPA/DC Public Reading Room hours of operation are 8:30 a.m. to 4:30 p.m., Monday through Friday, excluding legal holidays. The telephone number of the EPA/DC Public Reading Room is (202) 566–1744, and the telephone number for the OPPT Docket is (202) 566–0280. Docket visitors are required to show photographic identification, pass through a metal detector, and sign the EPA visitor log. All visitor bags are processed through an X-ray machine and subject to search. Visitors will be provided an EPA/DC badge that must be visible at all times in the building and returned upon departure.

FOR FURTHER INFORMATION CONTACT: *For general information contact*: Colby Lintner, Regulatory Coordinator, Environmental Assistance Division

(7408M), Office of Pollution Prevention and Toxics, Environmental Protection Agency, 1200 Pennsylvania Ave., NW., Washington, DC 20460–0001; telephone number: (202) 554–1404; e-mail address: *TSCA-Hotline@epa.gov*.

For technical information contact: Pam Moseley, Information Management Division (7407M), Office of Pollution Prevention and Toxics, Environmental Protection Agency, 1200 Pennsylvania Ave., NW., Washington, DC 20460–0001; telephone number: (202) 564–8955; fax number: (202) 564–8956; e-mail address: *moseley.pamela@epa.gov*.

SUPPLEMENTARY INFORMATION:

I. What Information is EPA Particularly Interested in?

Pursuant to section 3506(c)(2)(A) of PRA, EPA specifically solicits comments and information to enable it to:

1. Evaluate whether the proposed collection of information is necessary for the proper performance of the functions of the Agency, including whether the information will have practical utility.
2. Evaluate the accuracy of the Agency's estimates of the burden of the proposed collection of information, including the validity of the methodology and assumptions used.
3. Enhance the quality, utility, and clarity of the information to be collected.
4. Minimize the burden of the collection of information on those who are to respond, including through the use of appropriate automated electronic, mechanical, or other technological collection techniques or other forms of information technology, e.g., permitting electronic submission of responses. In particular, EPA is requesting comments from very small businesses (those that employ less than 25) on examples of specific additional efforts that EPA could make to reduce the paperwork burden for very small businesses affected by this collection.

II. What Should I Consider when I Prepare My Comments for EPA?

You may find the following suggestions helpful for preparing your comments:

1. Explain your views as clearly as possible and provide specific examples.
2. Describe any assumptions that you used.
3. Provide copies of any technical information and/or data you used that support your views.
4. If you estimate potential burden or costs, explain how you arrived at the estimate that you provide.
5. Provide specific examples to illustrate your concerns.
6. Offer alternative ways to improve the collection activity.
7. Make sure to submit your comments by the deadline identified under **DATES**.
8. To ensure proper receipt by EPA, be sure to identify the docket ID number assigned to this action in the subject line on the first page of your response. You may also provide the name, date, and **Federal Register** citation.

III. What Information Collection Activity or ICR Does this Action Apply to?

Affected entities: Entities potentially affected by this information collection are companies under contract to the Environmental Protection Agency to provide certain services, whose employees must have access to Toxic Substances Control Act (TSCA) confidential business information to perform their duties.

Title: Request for Contractor Access to TSCA CBI.

ICR numbers: EPA ICR No. 1250.09, OMB Control No. 2070–0075.

ICR status: This ICR is currently scheduled to expire on November 30, 2010. An Agency may not conduct or sponsor, and a person is not required to respond to, a collection of information, unless it displays a currently valid OMB control number. The OMB control numbers for EPA's regulations in title 40 of the Code of Federal Regulations (CFR), after appearing in the **Federal Register** when approved, are listed in 40 CFR part 9, are displayed either by publication in the **Federal Register** or by other appropriate means, such as on the related collection instrument or form, if applicable. The display of OMB control numbers for certain EPA regulations is consolidated in 40 CFR part 9.

Abstract: Certain employees of companies working under contract to EPA require access to TSCA confidential business information collected under the authority of TSCA in order to perform their official duties. The Office of Pollution Prevention and Toxics (OPPT), which is responsible for maintaining the security of TSCA confidential business information, requires that all individuals desiring access to TSCA CBI obtain and annually renew official clearance to TSCA CBI. As part of the process for obtaining TSCA CBI clearance, OPPT requires certain information about the contracting company and about each contractor employee requesting TSCA CBI clearance, primarily the name, Social Security Number and EPA identification badge number of the employee, the type of TSCA CBI clearance requested and the justification for such clearance, and the signature of the employee to an agreement with respect to access to and use of TSCA CBI.

Burden statement: The annual public reporting and recordkeeping burden for this collection of information is estimated to average 1.6 hours per response. Burden means the total time, effort, or financial resources expended by persons to generate, maintain, retain, or disclose or provide information to or for a Federal agency. This includes the time needed to review instructions; develop, acquire, install, and utilize technology and systems for the purposes of collecting, validating, and verifying information, processing and maintaining information, and disclosing and providing information; adjust the existing ways to comply with any previously applicable instructions and requirements which have subsequently changed; train personnel to be able to respond to a collection of information; search data sources; complete and review the collection of information; and transmit or otherwise disclose the information.

The ICR provides a detailed explanation of this estimate, which is only briefly summarized here:

Estimated total number of potential respondents: 30.

Frequency of response: On occasion.

Estimated total average number of responses for each respondent: 12.5.

Estimated total annual burden hours: 601 hours.

Estimated total annual costs: $30,253. This includes an estimated burden cost of $30,253 and an estimated cost of $0 for capital investment or maintenance and operational costs.

IV. Are There Changes in the Estimates from the Last Approval?

There is an increase of 155 hours in the total estimated respondent burden compared with that identified in the ICR currently approved by OMB. This increase reflects EPA's estimate of the number of contractor employees affected by this information collection.V. What is the Next Step in the Process for this ICR?

EPA will consider the comments received and amend the ICR as appropriate. The final ICR package will then be submitted to OMB for review and approval pursuant to 5 CFR 1320.12. EPA will issue another **Federal Register** notice pursuant to 5 CFR

1320.5(a)(1)(iv) to announce the submission of the ICR to OMB and the opportunity to submit additional comments to OMB. If you have any questions about this ICR or the approval process, please contact the technical person listed under **FOR FURTHER INFORMATION CONTACT**.

List of Subjects

Environmental protection, Reporting and recordkeeping requirements.

Dated: March 11, 2010.

Stephen A. Owens,

Assistant Administrator, Office of Prevention, Pesticides and Toxic Substances.

[FR Doc. 2010–6080 Filed 3–23–10; 8:45 am]

BILLING CODE 6560–50–S

ENVIRONMENTAL PROTECTON AGENCY

[EPA–HQ–OW–2010–0164; FRL–9129–4]

Executive Order 13508; Chesapeake Bay Protection and Restoration Section 502; Guidance for Federal Land Management in the Chesapeake Bay Watershed

AGENCY: Environmental Protection Agency (EPA).

ACTION: Notice and request for public review and comment.

SUMMARY: This notice announces the availability of a draft Guidance for Federal land management in the Chesapeake Bay watershed describing proven, cost-effective tools and practices that reduce water pollution and requests public comment. The document was prepared pursuant to Executive Order (E.O.) 13508 of May 12, 2009, Chesapeake Bay Protection and Restoration. This E.O. requires that the draft guidance be published for public review and comments.

DATES: Comments on the draft guidance must be submitted on or before April 23, 2010.

ADDRESSES: Submit your comments, identified by Docket ID No. EPA–HQ–OW–2010–0164, by one of the following methods:

- *http://www.regulations.gov:* After entering the docket for this action, click on the draft strategy document to make comment. Once you arrive at the page for the specific document on which you wish to comment, click the "Submit a Comment" button at the top right of the Web page, then follow the online instructions.
- *Mail:* Water Docket, Environmental Protection Agency, Mailcode: 2822T, 1200 Pennsylvania Ave., NW., Washington, DC 20460.
- *Hand Delivery:* EPA Docket Center Public Reading Room, EPA Headquarters West, Room 3340, 1301 Constitution Avenue, NW., Washington, DC. Such deliveries are only accepted during the Docket's normal hours of operation (8:30 a.m. to 4:30 p.m.), and special arrangements should be made for deliveries of boxed information by contacting the Docket Center at 202–566–1744.

Instructions: Direct your comments to Docket ID No. EPA–HQ–OW–2010–0164. This Notice is not open for public comment, but, the Section 502 draft guidance document is available for comment on *http://www.regulations.gov.* Additional information about the docket is contained below.

FOR FURTHER INFORMATION CONTACT: Katie Flahive, USEPA, Office of Water, Office of Wetlands, Oceans, and Watersheds; 1200 Pennsylvania Ave., NW., MC 4503T, Washington, DC 20460; telephone number: (202) 566–1206; fax number (202) 566–1437; e-mail: *flahive.katie@epa.gov.*

SUPPLEMENTARY INFORMATION:

Why Were These Documents Prepared?

Executive Order 13508, Chesapeake Bay Protection and Restoration, dated May 12, 2009 (74 FR 23099, May 15, 2009), requires the Administrator of EPA within 1 year and after consulting with the Committee and providing for public review and comment to publish this guidance document by May 12, 2010. The purpose of this document is to provide information and data on land management practices that, if implemented widely across the Chesapeake Bay watershed by both Federal land managers and non-Federal entities (and assuming that all necessary point source reductions are achieved and other needed restoration actions are taken), will enable the Chesapeake Bay to be restored. In significant part, this guidance is being developed to offer solutions for implementation to meet specific Chesapeake Bay goals. EPA, in conjunction with other agencies, is currently developing Bay-wide pollutant reduction goals that will ultimately be used to establish total maximum daily loads (TMDL) under Section 303(d) of the Clean Water Act for the Chesapeake Bay watershed. The TMDL will be followed by the development of watershed implementation plans in 92 Bay sub-watersheds that will have had load and wasteload allocations assigned based on the TMDL and the Chesapeake Bay model. While the Section 502 guidance document is required to be published by May 12, 2010, before the TMDL is finalized, we expect that the TMDL and sub-watershed allocations will clarify that the great majority of nonpoint sources in the Chesapeake Bay watershed will need to be controlled, and be controlled well, in order to restore the Bay. This guidance will have chapters addressing the following categories of activity: Agriculture; Urban areas, including Turf (excluding sources regulated as point sources); Onsite/Decentralized Treatment Systems; Forestry; Riparian Areas; and Hydromodification. Each chapter will contain one or more "implementation goals" that provide the framework for the chapter. These are intended to convey the essential actions that will need to be implemented in order to assure that the broad goals of the Chesapeake Bay Executive Order can be achieved. Each chapter also includes information on practices that can be used to achieve the goals; information on the effectiveness and costs of the practices; where relevant, cost savings or other economic/societal benefits (in addition to the pollutant reduction benefits) that derive from the implementation goals and/or practices; and copious references to other documents that provide additional information. Due to the expedited timeframe set by the Executive Order, the document is undergoing concurrent Federal Leadership Committee and public review, both as required by the Executive Order. Note that this public review is also concurrent with a technical peer review. EPA anticipates reviewing comments by these three entities in advance of the development of the final document.

How Can I Access the Docket and/or Submit Comments?

Docket: EPA has established a public docket for this Notice under Docket ID No. EPA–HQ–OW–2010–0164. The E.O. Section 502 draft guidance document is available in the docket at *http://www.regulations.gov,* as well as at *http://www.epa.gov/nps* and *http://executiveorder.chesapeakebay.net.* Assistance and tips for accessing the docket can be found at *http://executiveorder.chesapeakebay.net.* Comments via e-mail are not being accepted. Instead, comments will be accepted through *http://www.regulations.gov* and by mail. If you are commenting on the Section 502 draft guidance, submit comments to this specific document within the docket and identify the page number(s) at which each comment is directed. All comments received, including any

personal information provided, will be included in the public docket without change and will be made available online at *http://www.regulations.gov,* unless the comment includes information claimed to be Confidential Business Information (CBI) or other information, the disclosure of which is restricted by statute. Do not submit information that you consider to be CBI or otherwise protected through *http://www.regulations.gov.* It is recommended that you include your name and other contact information in the body of your comment and with any disk or CD–ROM you submit. If your comment cannot be read due to technical difficulties and we are unable to contact you for clarification, we will not consider your comment. Electronic files should avoid the use of special characters, any form of encryption, and be free of any defects or viruses. For additional information about the public docket visit the EPA Docket Center homepage at *http://www.epa.gov/epahome/dockets.htm.* Publicly available docket materials are available electronically either at *http://www.regulations.gov* as well as at the EPA Docket Center, EPA/DC, EPA West, Room 3334, 1301 Constitution Ave., NW., Washington, DC. The telephone number for this docket is 202–566–2426. The Public Reading Room is open from 8:30 a.m. to 4:30 p.m., Monday through Friday, excluding legal holidays. The telephone number for the Public Reading Room is (202) 566–1744. Certain material, such as copyrighted materials, will be publicly available only in hard copy at the Docket Center.

Why Is EPA Posting This Guidance for Public Comment?

Executive Order 13508 requires the Administrator of the EPA to prepare and publish after providing for public review and comment, guidance for Federal land management in the Chesapeake Bay watershed describing proven, cost-effective tools and practices that reduce water pollution, including practices that are available for use by Federal agencies.

What Are the Next Steps in the Process for Collecting Public Comment?

EPA will review public comments on the draft guidance. The comments will be taken into consideration as the EPA develops the final Section 502 guidance document. A response to comments document will be released at the same time as the final E.O. 13508 Section 502 guidance document with anticipated release by May 12, 2010.

Dated: March 18, 2010.

Peter S. Silva,

Assistant Administrator, Office of Water.

[FR Doc. 2010–6488 Filed 3–23–10; 8:45 am]

BILLING CODE 6560–50–P

ENVIRONMENTAL PROTECTION AGENCY

[EPA–HQ–OPPT–2010-0038; FRL–8815–1]

National Advisory Committee for Acute Exposure Guideline Levels for Hazardous Substances; Notice of Public Meeting

AGENCY: Environmental Protection Agency (EPA).

ACTION: Notice.

SUMMARY: A meeting of the National Advisory Committee for Acute Exposure Guideline Levels for Hazardous Substances (NAC/AEGL Committee) will be held on April 13–15, 2010, in San Francisco, CA. At this meeting, the NAC/AEGL Committee will address, as time permits, the various aspects of the acute toxicity and the development of Acute Exposure Guideline Levels (AEGLs) for the following chemicals: 1,3-butadiene; acetaldehyde; acrylonitrile; arsenic trioxide; benzene; bromine pentafluoride; butane; carbon dioxide; chlorine pentafluoride; chloroacetone; dichlorvos; hexane; hydrogen bromide; hydrogen iodide; ketene; methyl isothiocyanate; methylene chloride; monoethanolamine; nerve agent VX; nitric oxide; oleum; propargyl alcohol; propionaldehyde; red phosphorus; ricin; selenium hexafluoride; sulfur trioxide; sulfuric acid; trichloroethylene; and vinyl chloride.

DATES: A meeting of the NAC/AEGL Committee will be held from 10 a.m. to 5 p.m. on April 13, 2010; from 8 a.m. to 5 p.m. on April 14, 2010; and from 8 a.m. to 12 p.m. on April 15, 2010. To request accommodation of a disability, please contact the Designated Federal Officer (DFO) listed under **FOR FURTHER INFORMATON CONTACT**, preferably at least 10 days prior to the meeting, to give EPA as much time as possible to process your request.

ADDRESSES: The meeting will be held at the Mark Hopkins Inter-Continental Hotel, Number One Nob Hill, San Francisco, CA 94108.

FOR FURTHER INFORMATION CONTACT: Paul S. Tobin, DFO, Risk Assessment Division (7403M), Office of Pollution Prevention and Toxics, 1200 Pennsylvania Ave., NW., Washington, DC 20460–0001; telephone number: (202) 564–8557; e-mail address: *tobin.paul@epa.gov*.

SUPPLEMENTARY INFORMATION:

I. General Information

A. Does this Action Apply to Me?

This action is directed to the public in general. This action may be of particular interest to anyone who may be affected if the AEGL values are adopted by government agencies for emergency planning, prevention, or response programs, such as EPA's Risk Management Program under the Clean Air Act and Amendments Section 112r. It is possible that other Federal agencies besides EPA, as well as State agencies and private organizations, may adopt the AEGL values for their programs. As such, the Agency has not attempted to describe all the specific entities that may be affected by this action. If you have any questions regarding the applicability of this action to a particular entity, consult the person listed under **FOR FURTHER INFORMATION CONTACT**.

B. How Can I Get Copies of this Document and Other Related Information?

EPA has established a docket for this action under docket identification (ID) number EPA–HQ–OPPT–2010–0038. All documents in the docket are listed in the docket index available at *http://www.regulations.gov*. Although listed in the index, some information is not publicly available, e.g., Confidential Business Information (CBI) or other information whose disclosure is restricted by statute. Certain other material, such as copyrighted material, will be publicly available only in hard copy. Publicly available docket materials are available electronically at *http://www.regulations.gov*, or, if only available in hard copy, at the OPPT Docket. The OPPT Docket is located in the EPA Docket Center (EPA/DC) at Rm. 3334, EPA West Bldg., 1301 Constitution Ave., NW., Washington, DC. The EPA/DC Public Reading Room hours of operation are 8:30 a.m. to 4:30 p.m., Monday through Friday, excluding legal holidays. The telephone number of the EPA/DC Public Reading Room is (202) 566–1744, and the telephone number for the OPPT Docket is (202) 566–0280. Docket visitors are required to show photographic identification, pass through a metal detector, and sign the EPA visitor log. All visitor bags are processed through an X-ray machine and subject to search. Visitors will be provided an EPA/DC badge that must be visible at all times in the building and returned upon departure.

II. Meeting Procedures

For additional information on the scheduled meeting, the agenda of the NAC/AEGL Committee, or the submission of information on chemicals to be discussed at the meeting, contact the DFO.

The meeting of the NAC/AEGL Committee will be open to the public. Oral presentations or statements by interested parties will be limited to 10 minutes. Interested parties are encouraged to contact the DFO to schedule presentations before the NAC/AEGL Committee. Since seating for outside observers may be limited, those wishing to attend the meeting as observers are also encouraged to contact the DFO at the earliest possible date to ensure adequate seating arrangements. Inquiries regarding oral presentations and the submission of written statements or chemical-specific information should be directed to the DFO.

III. Future Meetings

Another meeting of the NAC/AEGL Committee is planned for Winter 2010.

List of Subjects

Environmental protection, Chemicals, Hazardous substances, Health.

Dated: March 17, 2009.

Wendy C. Hamnett,

Director, Office of Pollution Prevention and Toxics.

[FR Doc. 2010–6487 Filed 3–23–10; 8:45 am]

BILLING CODE 6560–50–S

ENVIRONMENTAL PROTECTION AGENCY

[EPA–HQ–OPP–2010–0012; FRL–8815–6]

Notice of Receipt of Several Pesticide Petitions Filed for Residues of Pesticide Chemicals in or on Various Commodities

AGENCY: Environmental Protection Agency (EPA).

ACTION: Notice.

SUMMARY: This notice announces the Agency's receipt of several initial filings of pesticide petitions proposing the establishment or modification of regulations for residues of pesticide chemicals in or on various commodities.

DATES: Comments must be received on or before April 23, 2010.

ADDRESSES: Submit your comments, identified by docket identification (ID) number and the pesticide petition number (PP) of interest as shown in the body of this document, by one of the following methods:

• *Federal eRulemaking Portal*: *http://www.regulations.gov*. Follow the on-line instructions for submitting comments.

• *Mail*: Office of Pesticide Programs (OPP) Regulatory Public Docket (7502P), Environmental Protection Agency, 1200 Pennsylvania Ave., NW., Washington, DC 20460–0001.

• *Delivery*: OPP Regulatory Public Docket (7502P), Environmental Protection Agency, Rm. S–4400, One Potomac Yard (South Bldg.), 2777 S. Crystal Dr., Arlington, VA. Deliveries are only accepted during the Docket Facility's normal hours of operation (8:30 a.m. to 4 p.m., Monday through Friday, excluding legal holidays). Special arrangements should be made for deliveries of boxed information. The Docket Facility telephone number is (703) 305–5805.

Instructions: Direct your comments to the docket ID number and the pesticide petition number of interest as shown in the body of this document. EPA's policy is that all comments received will be included in the docket without change and may be made available on-line at *http://www.regulations.gov*, including any personal information provided, unless the comment includes information claimed to be Confidential Business Information (CBI) or other information whose disclosure is restricted by statute. Do not submit information that you consider to be CBI or otherwise protected through regulations.gov or e-mail. The regulations.gov website is an "anonymous access" system, which means EPA will not know your identity or contact information unless you provide it in the body of your comment. If you send an e-mail comment directly to EPA without going through regulations.gov, your e-mail address will be automatically captured and included as part of the comment that is placed in the docket and made available on the Internet. If you submit an electronic comment, EPA recommends that you include your name and other contact information in the body of your comment and with any disk or CD-ROM you submit. If EPA cannot read your comment due to technical difficulties and cannot contact you for clarification, EPA may not be able to consider your comment. Electronic files should avoid the use of special characters, any form of encryption, and be free of any defects or viruses.

Docket: All documents in the docket are listed in the docket index available at *http://www.regulations.gov*. Although listed in the index, some information is not publicly available, e.g., CBI or other information whose disclosure is restricted by statute. Certain other material, such as copyrighted material, is not placed on the Internet and will be publicly available only in hard copy form. Publicly available docket materials are available either in the electronic docket at *http://www.regulations.gov*, or, if only available in hard copy, at the OPP Regulatory Public Docket in Rm. S–4400, One Potomac Yard (South Bldg.), 2777 S. Crystal Dr., Arlington, VA. The hours of operation of this Docket Facility are from 8:30 a.m. to 4 p.m., Monday through Friday, excluding legal holidays. The Docket Facility telephone number is (703) 305–5805.

FOR FURTHER INFORMATION CONTACT: A contact person, with telephone number and e-mail address, is listed at the end of each pesticide petition summary. You may also reach each contact person by mail at Registration Division (7505P), Office of Pesticide Programs, Environmental Protection Agency, 1200 Pennsylvania Ave., NW., Washington, DC 20460–0001.

SUPPLEMENTARY INFORMATION:

I. General Information

A. Does this Action Apply to Me?

You may be potentially affected by this action if you are an agricultural producer, food manufacturer, or pesticide manufacturer. Potentially affected entities may include, but are not limited to:

• Crop production (NAICS code 111).

• Animal production (NAICS code 112).

• Food manufacturing (NAICS code 311).

• Pesticide manufacturing (NAICS code 32532).

This listing is not intended to be exhaustive, but rather provides a guide for readers regarding entities likely to be affected by this action. Other types of entities not listed in this unit could also be affected. The North American Industrial Classification System (NAICS) codes have been provided to assist you and others in determining whether this action might apply to certain entities. If you have any questions regarding the applicability of this action to a particular entity, consult the person listed at the end of the pesticide petition summary of interest.

B. What Should I Consider as I Prepare My Comments for EPA?

1. *Submitting CBI*. Do not submit this information to EPA through regulations.gov or e-mail. Clearly mark the part or all of the information that you claim to be CBI. For CBI information in a disk or CD-ROM that you mail to EPA, mark the outside of the

disk or CD-ROM as CBI and then identify electronically within the disk or CD-ROM the specific information that is claimed as CBI. In addition to one complete version of the comment that includes information claimed as CBI, a copy of the comment that does not contain the information claimed as CBI must be submitted for inclusion in the public docket. Information so marked will not be disclosed except in accordance with procedures set forth in 40 CFR part 2.

2. *Tips for preparing your comments*. When submitting comments, remember to:

i. Identify the document by docket ID number and other identifying information (subject heading, **Federal Register** date and page number).

ii. Follow directions. The Agency may ask you to respond to specific questions or organize comments by referencing a Code of Federal Regulations (CFR) part or section number.

iii. Explain why you agree or disagree; suggest alternatives and substitute language for your requested changes.

iv. Describe any assumptions and provide any technical information and/or data that you used.

v. If you estimate potential costs or burdens, explain how you arrived at your estimate in sufficient detail to allow for it to be reproduced.

vi. Provide specific examples to illustrate your concerns and suggest alternatives.

vii. Explain your views as clearly as possible, avoiding the use of profanity or personal threats.

viii. Make sure to submit your comments by the comment period deadline identified.

3. *Environmental justice*. EPA seeks to achieve environmental justice, the fair treatment and meaningful involvement of any group, including minority and/or low-income populations, in the development, implementation, and enforcement of environmental laws, regulations, and policies. To help address potential environmental justice issues, the Agency seeks information on any groups or segments of the population who, as a result of their location, cultural practices, or other factors, may have a typical or disproportionately high and adverse human health impacts or environmental effects from exposure to the pesticides discussed in this document, compared to the general population.

II. What Action is the Agency Taking?

EPA is announcing its receipt of several pesticide petitions filed under section 408 of the Federal Food, Drug, and Cosmetic Act (FFDCA), 21 U.S.C. 346a, proposing the establishment or modification of regulations in 40 CFR part 174 or part 180 for residues of pesticide chemicals in or on various food commodities. EPA has determined that the pesticide petitions described in this notice contain the data or information prescribed in FFDCA section 408(d)(2); however, EPA has not fully evaluated the sufficiency of the submitted data at this time or whether the data support granting of the pesticide petitions. Additional data may be needed before EPA can make a final determination on these pesticide petitions.

Pursuant to 40 CFR 180.7(f), a summary of each of the petitions that are the subject of this notice, prepared by the petitioner, is included in a docket EPA has created for each rulemaking. The docket for each of the petitions is available on-line at *http://www.regulations.gov*.

As specified in FFDCA section 408(d)(3), (21 U.S.C. 346a(d)(3)), EPA is publishing notice of the petition so that the public has an opportunity to comment on this request for the establishment or modification of regulations for residues of pesticides in or on food commodities. Further information on the petition may be obtained through the petition summary referenced in this unit.

New Tolerances

1. *PP 0E7684*. (EPA–HQ–OPP–2009–0682). The Interregional Research Project No. 4 (IR-4), 500 College Road East, Suite 201W, Princeton, NJ 08540, proposes to establish tolerances in 40 CFR part 180 for residues of the insecticide spiromesifen, 2-oxo-3-(2,4,6-trimethylphenyl)-1-oxaspiro[4.4]non-3-en-4-yl 3,3-dimethylbutanoate, and its enol metabolite; 4-hydroxy-3-(2,4,6-trimethylphenyl)-1-oxaspiro[4.4]non-3-en-2-one calculated as parent compound equivalents, in or on pea, dry, seed at 0.15 parts per million (ppm); spearmint, tops at 25 ppm; and peppermint, tops at 25 ppm. Adequate analytical methodology using liquid chromatography/mass spectrometry/mass spectrometry (LC/MS/MS) detection is available for enforcement purposes. Contact: Andrew Ertman, (703) 308–9367; e-mail address: *ertman.andrew@epa.gov*.

2. *PP 9E7564*. (EPA–HQ–OPP–2010–0136). Bayer CropScience, 2 T.W. Alexander Drive, P.O. Box 12014, Research Triangle Park, NC 27709, proposes to establish tolerances in 40 CFR part 180 for residues of the fungicide spiroxamine, (8-(1,1-dimethylethyl)-*N*-ethyl-*N*-propyl-1,4-dioxaspiro[4,5]decane-2-methanamine) and its metabolites containing the *N*-ethyl-*N*-propyl-1,2-dihydroxy-3-aminopropane moiety, calculated as parent equivalent, in or on artichoke at 0.7 ppm; asparagus at 0.05 ppm; and vegetable, fruiting, group 8 at 1.2 ppm. Analytical methods to determine the total residues of spiroxamine (sum of spiroxamine and all metabolites containing the aminodiol moiety [*N*-ethyl-*N*-propyl-1,2-dihydroxy-3-aminopropane]) using gas chromatography (GC) have been submitted to the EPA. In addition, a new validated method employing high performance liquid chromatography/MS/MS (HPLC-MS/MS) with a limit of quantitation (LOQ) of 0.05 ppm for total residues of spiroxamine is being submitted. The extraction and hydrolysis procedures of the two methods are, and the LC/MS/MS substitutes a cation exchange cartridge cleanup, compared to the liquid/liquid partition, polystyrenedivinylbenzene column cleanup and trimethylsilylation derivatization. Contact: Tamue Gibson, (703) 305–0096; e-mail address: *gibson.tamue@epa.gov*.

3. *PP 9F7602*. (EPA–HQ–OPP–2009–0682). Bayer CropScience, 2 T.W. Alexander Drive, P.O. Box 12014, Research Triangle Park, NC 27709, proposes to establish a tolerance in 40 CFR part 180 for residues of the insecticide spiromesifen, (2-oxo-3-(2,4,6-trimethylphenyl)-1-oxaspiro[4.4]non-3-en-4-yl 3,3-dimethylbutanoate) and its enol metabolite; (4-hydroxy-3-(2,4,6-trimethylphenyl)-1-oxaspiro[4.4]non-3-en-2-one), calculated as the parent compound equivalents, in or on vegetable, leafy petiole, crop subgroup 4B at 6.0 ppm. Adequate analytical methodology using LC/MS/MS detection is available for enforcement purposes. Contact: Jennifer Gaines, (703) 305–5967; e-mail address: *gaines.jennifer@epa.gov*.

4. *PP 9F7644*. (EPA–HQ–OPP–2009–0988). Monsanto Company, 1300 I St., NW., Suite 450 East, Washington, DC 20052, proposes to establish a tolerance in 40 CFR part 180 for residues of the herbicide glyphosate, *N*-(phosphonomethyl) glycine, in or on corn, sweet, forage at 9 ppm. Adequate enforcement methods are available for analysis of residues of glyphosate and its metabolite AMPA in or on plant and livestock commodities. These methods include: Gas liquid chromatography (GLC) — Method I in PAM II, 0.05 ppm LOD; HPLC with fluorometric detection, 0.0005 ppm LOD; and GC/MS in crops validated by EPA's Analytical Chemistry Laboratory (ACL). Thus, adequate analytical methods are

available for residue data collection and enforcement of the proposed tolerances for glyphosate. Contact: Erik Kraft, (703) 308–9358; e-mail address: *kraft.erik@epa.gov*.

5. *PP 9F7657*. (EPA–HQ–OPP–2010–0041). Syngenta Crop Protection, Inc., P.O. Box 18300, Greensboro, NC 27419, proposes to establish tolerances in 40 CFR part 180 for residues of the insecticide thiamethoxam, 3-[(2-chloro-5-thiazolyl)methyl] tetrahydro-5-methyl-*N*-nitro-4*H*-1,3,5-oxadiazin-4-imine and its metabolite, *N*-(2-chloro-thiazol-5-ylmethyl)-*N*'-methyl-*N*'-nitro-guanidine, in or on peanut at 0.05 ppm and peanut, hay at 0.25 ppm. Syngenta Crop Protection, Inc., has submitted practical analytical methodology for detecting and measuring levels of thiamethoxam in or on raw agricultural commodities. This method is based on crop specific cleanup procedures and determination by liquid chromatography with either ultra-violet (UV) or MS detections. The limit of detection (LOD) for each analyte of this method is 1.25 nanogram (ng) injected for samples analyzed by UV and 0.25 ng injected for samples analyzed by MS, and the limit of quantification (LOQ) is 0.005 ppm for milk and juices, and 0.01 ppm for all other substrates. Contact: Julie Chao, (703) 308–8735; e-mail address: *chao.julie@epa.gov*.

6. *PP 9F7673*. (EPA–HQ–OPP–2010–0051). Veto-Pharma SA, c/o Arysta LifeScience America, 1450 Broadway, 7th Floor, New York, NY 10018, proposes to establish a tolerance in 40 CFR part 180 for residues of the insecticide amitraz, in or on honey at 1 ppm. There are two adequate methods listed in FDA's Pesticide Analytical Manual (PAM Vol. II) for purposes of data collection and enforcement of tolerances for residues of amitraz and its metabolites containing the 2,4-DMA moiety. Methods I (designed for animal tissues and milk) and II (designed for plant commodities) are both gas liquid chromatography (GLC) methods with electron capture detection (ECD), and convert residues of amitraz to 2,4-DMA by acid and base hydrolysis, respectively. The LOD are 0.01 ppm for milk and 0.05 ppm for plant and other animal commodities. Amitraz, and its metabolites containing the 2,4-DMA moiety have been tested using the Food and Drug Administration's (FDA's) Multi-residue Method Protocol D; the metabolite BTS–27919 was the only compound which could be analyzed by this protocol. Contact: Julie Chao, (703) 308–8735; e-mail address: *chao.julie@epa.gov*.

Amended Tolerance

PP 9F7644. (EPA–HQ–OPP–2009–0988). Monsanto Company, 1300 I St., NW., Suite 450 East, Washington, DC 20052, proposes to amend the tolerances in 40 CFR 180.364 for residues of the herbicide glyphosate, *N*-(phosphonomethyl) glycine, in or on corn, sweet, kernels plus cob with husk be removed at 3 ppm; and correction of the glyphosate tolerance in the commodity poultry, meat from 4 ppm to 0.1 ppm. Adequate enforcement methods are available for analysis of residues of glyphosate and its metabolite AMPA in or on plant and livestock commodities. These methods include: GLC – Method I in PAM II, 0.05 ppm LOD; HPLC with fluorometric detection, 0.0005 ppm LOD; and GC/MS in crops validated by EPA's Analytical Chemistry Laboratory (ACL). Thus, adequate analytical methods are available for residue data collection and enforcement of the proposed tolerances for glyphosate. Contact: Erik Kraft, (703) 308–9358; e-mail address: *kraft.erik@epa.gov*.

New Tolerance Exemptions

1. *PP 9E7621*. (EPA–HQ–OPP–2010–0138). Lamberti USA Inc., 161 Washington St., Conshohocken, PA 19428, proposes to establish an exemption from the requirement of a tolerance in 40 CFR 180.910 for residues of alkyl polyglucoside esters (AGEs) group, formed by D-Glucopyranose, oligomeric, 6-(dihydrogen 2-hydroxy-1,2,3-propanetricarboxylate), 1-(C_8-C_{20} linear and branched alkyl) ethers, sodium salts (CAS No. 1079993–97–7); D-Glucopyranose, oligomeric, 6-(hydrogen sulfobutanedioate), 1-(C_8-C_{20} linear and branched alkyl) ethers, sodium salts (CAS No. 1079993–92–2); D-Glucopyranose, oligomeric, Propanoic acid, 2-hydroxy-, 1-(C_8-C_{20} linear and branched alkyl) ethers (CAS No. 1079993–94–4); and in 40 CFR 180.920 for residues of alkyl polyglucoside esters (AGEs) group, formed by D-Glucopyranose, oligomeric, 6-(dihydrogen 2-hydroxy-1,2,3-propanetricarboxylate), 1-(C_8-C_{20} linear and branched alkyl) ethers, sodium salts (CAS No. 1079993–97–7); D-Glucopyranose, oligomeric, 6-(hydrogen sulfobutanedioate), 1-(C_8-C_{20} linear and branched alkyl) ethers, sodium salts (CAS No. 1079993–92–2); D-Glucopyranose, oligomeric, Propanoic acid, 2-hydroxy-, 1-(C_8-C_{20} linear and branched alkyl) ethers (CAS No. 1079993–94–4) in or on all raw agricultural commodities when used as a pesticide inert ingredient in pesticide formulations. The petitioner believes no analytical method is needed because requirements for an analytical method are not applicable to a request to establish an exemption from the requirement of a tolerance. Contact: Lisa Austin, (703) 305–7894; e-mail address: *austin.lisa@epa.gov*.

2. *PP 9E7671*. (EPA–HQ–OPP–2010–0181). AMVAC Chemical Corporation, 4695 MacArthur Court, Suite 1250, Newport Beach, CA 90660, proposes to establish an exemption from the requirement of a tolerance for residues of n-Octyl Alcohol (CAS No. 111–87–5) and n-Decyl Alcohol (CAS No. 112–30–1) in or on potatoes when used as a pesticide inert ingredient in pesticide formulations applied to raw agricultural commodities after harvest. The petitioner believes no analytical method is needed because requirements for an analytical method are not applicable to a request to establish an exemption from the requirement of a tolerance. Contact: Alganesh Debesai, (703) 308–8353; e-mail address: *debesai.alganesh@epa.gov*.

Amended Tolerance Exemption

PP 0E7683. (EPA–HQ–OPP–2009–0130). Joint Inerts Task Force, Cluster Support Team 15, EPA Company No. 84947, c/o CropLife America, 1156 15th St., Suite 400, Washington, DC 20005, proposes to amend an exemption from the requirement of a tolerance in 40 CFR 180.920 for residues of *N,N,N',N,"*-Tetrakis-(2-hydroxypropyl) ethylenediamine (NTHE) (CAS No. 102–60–3) to include the exemption from the requirement of a tolerance for 40 CFR 180.910 and 40 CFR 180.930 when used as a pesticide inert ingredient in pesticide formulations, including: *N,N,N',N,"*-Tetrakis-(2-hydroxypropyl) ethylenediamine *N,N,N',N,"*-Tetrakis-(2-hydroxypropyl) ethylenediamine with a maximum concentration of 20% by weight in pesticide formulations. The petitioner believes no analytical method is needed because requirements for an analytical method are not applicable to a request to establish an exemption from the requirement of a tolerance. Contact: Lisa Austin, (703) 305–7894; e-mail address: *austin.lisa@epa.gov*.

List of Subjects

Environmental protection, Agricultural commodities, Feed additives, Food additives, Pesticides and pests, Reporting and recordkeeping requirements.

Dated: March 11, 2010.

Lois Rossi,

Director, Registration Division, Office of Pesticide Programs.

[FR Doc. 2010–6344 Filed 3–23–10; 8:45 am]

BILLING CODE 6560–50–S

FEDERAL COMMUNICATIONS COMMISSION

Notice of Public Information Collection Being Submitted for Review and Approval to the Office of Management and Budget (OMB), Comments Requested.

March 17, 2010.

SUMMARY: The Federal Communications Commission, as part of its continuing effort to reduce paperwork burden invites the general public and other Federal agencies to take this opportunity to comment on the following information collection(s), as required by the Paperwork Reduction Act of 1995, 44 U.S.C. 3501–3520. Comments are requested concerning: (a) Whether the proposed collection of information is necessary for the proper performance of the functions of the Commission, including whether the information shall have practical utility; (b) the accuracy of the Commission's burden estimate; (c) ways to enhance the quality, utility, and clarity of the information collected; (d) ways to minimize the burden of the collection of information on the respondents, including the use of automated collection techniques or other forms of information technology; and (e) ways to further reduce the information collection burden for small business concerns with fewer than 25 employees. The FCC may not conduct or sponsor a collection of information unless it displays a currently valid OMB Control Number. No person shall be subject to any penalty for failing to comply with a collection of information subject to the Paperwork Reduction Act (PRA) that does not display a valid OMB Control Number.

DATES: Written Paperwork Reduction Act (PRA) comments should be submitted on or before April 23, 2010. If you anticipate that you will be submitting PRA comments, but find it difficult to do so within the period of time allowed by this notice, you should advise the FCC contact listed below as soon as possible.

ADDRESSES: Direct all PRA comments to Nicholas A. Fraser, Office of Management and Budget (OMB), via fax at 202–395–5167, or via the Internet at *Nicholas_A._Fraser@omb.eop.gov* and to the Federal Communications Commission via e-mail to *PRA@fcc.gov.* To view a copy of this information collection request (ICR) submitted to OMB: (1) Go to web page: *http://www.reginfo.gov/public/do/PRAMain*, (2) look for the section of the web page called "Currently Under Review", (3) click on the downward-pointing arrow in the "Select Agency" box below the "Currently Under Review" heading, (4) select "Federal Communications Commission" from the list of agencies presented in the "Select Agency" box, (5) click the "Submit" button to the right of the "Select Agency" box, and (6) when the FCC ICRs currently under review appears, look for the title of this ICR (or its OMB Control Number, if there is one) and then click on the ICR Reference Number to view detailed information about this ICR.

FOR FURTHER INFORMATION CONTACT: Leslie F. Smith, (202) 418–0217. For additional information or copies of the information collection(s), contact Leslie F. Smith, 202–418–0217, or via the Internet at *Leslie.Smith@fcc.gov.*

SUPPLEMENTARY INFORMATION:

OMB Control Number: 3060–0917.

Title: CORES Registration Form.

Form Number: FCC 160.

Type of Review: Extension of a currently approved collection.

Respondents: Individuals or households; Businesses or other for-profit entities; Not-for-profit institutions; and State, Local, or Tribal Governments.

Number of Respondents: 150,000; 150,000 responses.

Estimated Time Per Response: 10 minutes (0.167 hours).

Frequency of Response: One time reporting requirement.

Obligation to Respond: Required to obtain or retain benefits.

Total Annual Burden: 25,050 hours.

Total Annual Costs: None.

Privacy Act Impact Assessment: Not required.

Nature and Extent of Confidentiality: The FCC has a system of records, FCC/OMD–9, "Commission Registration System (CORES)," to cover the collection, purpose(s), storage, safeguards, and disposal of the personally identifiable information (PII) that individual respondents may submit on FCC Form 160. The FCC will also redact PII submitted on this form before it makes FCC Form 160 available for public inspection. FCC Form 160 includes a privacy statement to inform applicants (respondents) of the Commission's need to obtain the information and the protections that the FCC has in place to protect the PII.

Need and Uses: Respondents use FCC Form 160 to register in the FCC';s Commission Registration System (CORES). Respondents may also register in CORES on-line at *http://www.fcc.gov/frnreg.* When registering, the respondent receives a unique FCC Registration Number (FRN), which is required for anyone doing business with the Commission. FCC Form 160 is used to collect information that pertains to the entity's name, address, contact representative, telephone number, e-mail address, and fax number. The Commission uses this information to collect or report on any delinquent debt arising from the respondent's business dealings with the FCC, including both "feeable" and "nonfeeable" services; and to ensure that registrants (respondents) receive any refunds due. Use of the CORES System is also a means of ensuring that the Commission operates in compliance with the Debt Collection Improvement Act of 1996.

The Commission has increased the number of respondents and number of responses by approximately 50,000 each to account for those who will now be filing FCC Form 323, "Ownership Report for Commercial Broadcast Stations."

Federal Communications Commission.

Marlene H. Dortch,

Secretary,

Office of the Secretary,

Office of Managing Director.

[FR Doc. 2010–6449 Filed 3–23–10– 8:45 am]

BILLING CODE 6712–01–S

FEDERAL COMMUNICATIONS COMMISSION

Notice of Public Information Collection(s) Being Submitted for Review and Approval to the Office of Management and Budget (OMB), Comments Requested.

March 17, 2010.

SUMMARY: The Federal Communications Commission, as part of its continuing effort to reduce paperwork burden invites the general public and other Federal agencies to take this opportunity to comment on the following information collection(s), as required by the Paperwork Reduction Act of 1995, 44 U.S.C. 3501–3520. Comments are requested concerning: (a) whether the proposed collection of information is necessary for the proper performance of the functions of the Commission, including whether the information shall have practical utility; (b) the accuracy of the Commission's burden estimate; (c) ways to enhance

the quality, utility, and clarity of the information collected; (d) ways to minimize the burden of the collection of information on the respondents, including the use of automated collection techniques or other forms of information technolog; and (e) ways to further reduce the information collection burden for small business concerns with fewer than 25 employees.

The FCC may not conduct or sponsor a collection of information unless it displays a currently valid OMB Control Number. No person shall be subject to any penalty for failing to comply with a collection of information subject to the Paperwork Reduction Act (PRA) that does not display a valid OMB Control Number.

DATES: Written Paperwork Reduction Act (PRA) comments should be submitted on or before April 23, 2010. If you anticipate that you will be submitting PRA comments, but find it difficult to do so within the period of time allowed by this notice, you should advise the FCC contact listed below as soon as possible.

ADDRESSES: Direct all PRA comments to Nicholas A. Fraser, Office of Management and Budget (OMB), via fax at (202) 395–5167, or via the Internet at Nicholas_A._Fraser@omb.eop.gov and to the Federal Communications Commission (FCC) via e–mail to PRA@fcc.gov. To view a copy of this information collection request (ICR) submitted to OMB: (1) Go to web page: http://www.reginfo.gov/public/do/PRAMain, (2) look for the section of the web page called "Currently Under Review", (3) click on the downward–pointing arrow in the "Select Agency" box below the "Currently Under Review" heading, (4) select "Federal Communications Commission" from the list of agencies presented in the "Select Agency" box, (5) click the "Submit" button to the right of the "Select Agency" box, and (6) when the list of FCC lCRs currently under review appears, look for the title of this ICR (or its OMB Control Number, if there is one) and then click on the ICR Reference Number to view detailed information about this ICR.

FOR FURTHER INFORMATION CONTACT: Leslie F. Smith, (202) 418–0217. For additional information or copies of the information collection(s), contact Leslie F.Smith, 202–418–0217, or via the Internet at Leslie.Smith@fcc.gov.

SUPPLEMENTARY INFORMATION:

OMB Control Number: 3060–0918.

Title: CORES Update/Change Form.

Form Number: FCC 161.

Type of Review: Extension of a currently approved collection.

Respondents: Individuals or households; Businesses or other for–profit entities; Not–for–profit institutions; and State, Local, or Tribal Governments.

Number of Respondents: 57,600; 57,600 responses.

Estimated Time Per Response: 10 minutes (0.167 hours).

Frequency of Response: One time reporting requirement.

Obligation to Respond: Required to obtain or retain benefits.

Total Annual Burden: 9,792 hours.

Total Annual Costs: None.

Privacy Act Impact Assessment: Not required.

Nature and Extent of Confidentiality: The FCC has a system of records, FCC/OMD–9, "Commission Registration System (CORES)," to cover the collection, purpose(s), storage, safeguards, and disposal of the personally identifiable information (PII) that individual respondents may submit on FCC Form 161. The FCC will redact any PII submitted on this form before it makes FCC Form 161 available for public inspection. FCC Form 161 includes a privacy statement to inform applicants (respondents) of the Commission's need to obtain the information and the protections that the FCC has in place to protect the PII.

Need and Uses: After respondents have registered in the FCC's Commission Registration System (CORES) and have been issued a FCC Registration Number (FRN), they may use FCC Form 161 to update and/or change their contact information, including name, address, telephone number, e–mail address, fax number, contact representative, contact representative's address, telephone number, e–mail address, and/or fax number. Respondents may also update their registration information in CORES on–line at http://www.fcc.gov/frnreg. The Commission uses this information to collect or report on any delinquent debt arising from the respondent's business dealings with the FCC, including both "feeable" and "nonfeeable" services; and to ensure that registrants (respondents) receive any refunds due. Use of the CORES System is also a means of ensuring that the Commission operates in compliance with the Debt Collection Improvement Act of 1996.

Federal Communications Commission.

Marlene H. Dortch,

Secretary, Office of the Secretary, Office of Managing Director.

[FR Doc. 2010–6452 Filed 3–23–10; 8:45 am]

BILLING CODE 6712–01–S

FEDERAL RESERVE SYSTEM

Notice of Proposals to Engage in Permissible Nonbanking Activities or to Acquire Companies that are Engaged in Permissible Nonbanking Activities

The companies listed in this notice have given notice under section 4 of the Bank Holding Company Act (12 U.S.C. 1843) (BHC Act) and Regulation Y (12 CFR Part 225) to engage *de novo*, or to acquire or control voting securities or assets of a company, including the companies listed below, that engages either directly or through a subsidiary or other company, in a nonbanking activity that is listed in § 225.28 of Regulation Y (12 CFR 225.28) or that the Board has determined by Order to be closely related to banking and permissible for bank holding companies. Unless otherwise noted, these activities will be conducted throughout the United States.

Each notice is available for inspection at the Federal Reserve Bank indicated. The notice also will be available for inspection at the offices of the Board of Governors. Interested persons may express their views in writing on the question whether the proposal complies with the standards of section 4 of the BHC Act. Additional information on all bank holding companies may be obtained from the National Information Center website at *www.ffiec.gov/nic/*.

Unless otherwise noted, comments regarding the applications must be received at the Reserve Bank indicated or the offices of the Board of Governors not later than April 8, 2010.

A. Federal Reserve Bank of Dallas (E. Ann Worthy, Vice President) 2200 North Pearl Street, Dallas, Texas 75201-2272:

1. TTC Holdings, Inc., San Antonio, Texas; to engage in financial and investment advisory activities through its acquisition of Austin, Calvert and Flavin, Inc., San Antonio,Texas; pursuant to section 225.28(b)(6)(i) of Regulation Y,

Board of Governors of the Federal Reserve System, March 19, 2010.

Robert deV. Frierson,

Deputy Secretary of the Board.

[FR Doc. 2010–6460 Filed 3–23–10; 8:45 am]

BILLING CODE 6210–01–S

FEDERAL MARITIME COMMISSION

Agency Information Collection Request: 60-Day Public Comment Request

AGENCY: Federal Maritime Commission.

ACTION: Notice and request for comments.

SUMMARY: As part of our continuing effort to reduce paperwork and respondent burden, and as required by the Paperwork Reduction Act of 1995, the Federal Maritime Commission invites comments on the continuing information collection (extension of the information collection with no changes) listed below in this notice.

DATES: Comments must be submitted on or before May 24, 2010.

ADDRESSES: You may send comments to: Ronald D. Murphy, Managing Director, Office of the Managing Director, Federal Maritime Commission, 800 North Capitol Street, NW., Washington, DC 20573, (Telephone: (202) 523–5800), *omd@fmc.gov.* Please reference the information collection's title, form, and OMB numbers (if any) in your comments.

FOR FURTHER INFORMATION CONTACT: To obtain additional information, copies of the information collection and instructions, or copies of any comments received, contact Jane Gregory, Management Analyst, Office of the Managing Director, Federal Maritime Commission, 800 North Capitol Street, NW., Washington, DC 20573, (Telephone: (202) 523–5800), jgregory@fmc.gov.

SUPPLEMENTARY INFORMATION:

Request for Comments

The Federal Maritime Commission, as part of its continuing effort to reduce paperwork and respondent burden, invites the general public and other Federal agencies to comment on the continuing information collection listed in this notice, as required by the Paperwork Reduction Act of 1995 (44 U.S.C. 3501 *et seq.*).

Comments submitted in response to this notice will be included or summarized in our request for Office of Management and Budget (OMB) approval of the relevant information collection. All comments are part of the public record and subject to disclosure. Please do not include any confidential or inappropriate material in your comments. We invite comments on: (1) The necessity and utility of the proposed information collection for the proper performance of the agency's functions; (2) the accuracy of the estimated burden; (3) ways to enhance the quality, utility, and clarity of the information to be collected; and (4) the use of automated collection techniques or other forms of information technology to minimize the information collection burden.

Information Collection Open for Comment

Title: 46 CFR Part 535—Ocean Common Carrier and Marine Terminal Operator Agreements Subject to the Shipping Act of 1984.

OMB Approval Number: 3072–0045 (Expires May 31, 2010).

Abstract: Section 4 of the Shipping Act of 1984, 46 U.S.C. 40301(a)–(c), identifies certain agreements by or among ocean common carriers and marine terminal operators (MTOs) that fall within the jurisdiction of that Act. Section 5 of the Act, 46 U.S.C. 40302, requires that carriers and MTOs file those agreements with the Federal Maritime Commission. Section 6 of the Act, 46 U.S.C. 40304, 40306, and 41307(b)–(d), specifies the Commission actions that may be taken with respect to filed agreements, including requiring the submission of additional information. Section 15 of the Act, 46 U.S.C. 40104, authorizes the Commission to require that common carriers, among other persons, file periodic or special reports. Requests for additional information and the filing of periodic or special reports are meant to assist the Commission in fulfilling its statutory mandate of overseeing the activities of the ocean transportation industry. These reports are necessary so that the Commission can monitor agreement parties' activities to determine how or if their activities will have an impact on competition.

Current Actions: There are no changes to this information collection, and it is being submitted for extension purposes only.

Type of Review: Extension.

Needs and Uses: The Commission staff uses the information filed by agreement parties to monitor their activities as required by the Shipping Act of 1984. Under the general standard set forth in section 6(g) of the Act, 46 U.S.C. 41307(b)(1), the Commission must determine whether filed agreements are likely, by a reduction in competition, to produce an unreasonable reduction in transportation service or an unreasonable increase in transportation cost. If it is shown, based on information collected under this rule, that an agreement is likely to have the foregoing adverse effects, the Commission may bring suit in the U.S. District Court for the District of Columbia to enjoin the operation of that agreement. Other than an agreement filed under section 5 of the Act, the information collected may not be disclosed to the public except as may be relevant to an administrative or judicial proceeding, and disclosure to Congress.

Frequency: This information is collected generally on a quarterly basis or as required under the rules.

Type of Respondents: The types of respondents are ocean common carriers and MTOs subject to the Shipping Act of 1984.

Number of Annual Respondents: The Commission estimates a potential annual respondent universe of 589 entities.

Estimated Time per Response: The average time for filing agreements, including the preparation and submission of information required on Form FMC–150, *Information Form for Agreements Between or Among Ocean Common Carriers,* is estimated to be 8.3 person-hours per response. The average time for completing Form FMC–151, *Monitoring Report for Agreements Between or Among Ocean Common Carriers,* is estimated to be 65.2 person-hours per response, depending on the complexity of the required information. The average time for reporting for all responses is 7.1 person-hours.

Total Annual Burden: The Commission estimates the total person-hour burden at 10,162 person-hours.

Rachel E. Dickon,

Assistant Secretary.

[FR Doc. 2010–6489 Filed 3–23–10; 8:45 am]

BILLING CODE P

FEDERAL MARITIME COMMISSION

Notice of Agreements Filed

The Commission hereby gives notice of the filing of the following agreements under the Shipping Act of 1984. Interested parties may submit comments on the agreements to the Secretary, Federal Maritime Commission, Washington, DC 20573, within ten days of the date this notice appears in the **Federal Register**. Copies of the agreements are available through the Commission's Website (*http://www.fmc.gov*) or by contacting the Office of Agreements at (202)–523–5793 or *tradeanalysis@fmc.gov.*

Agreement No.: 011602–012.

Title: Grand Alliance Agreement II.

Parties: Hapag-Lloyd AG; Hapag-Lloyd USA LLC; Nippon Yusen Kaisha; Orient Overseas Container Line, Inc.; Orient Overseas Container Line Limited; and Orient Overseas Container Line (Europe) Limited.

Filing Party: Wayne R. Rohde, Esq.; Sher & Blackwell; 1850 M Street, NW.

Synopsis: The amendment deletes obsolete language, revises the voting

and arbitration procedures, extends the duration, and restates the agreement.

Agreement No.: 012068–001.

Title: Grand Alliance/Zim/HSDG Atlantic Space Charter Agreement.

Parties: Hapag-Lloyd AG, Nippon Yusen Kaisha, Orient Overseas Container Lines Inc., Orient Overseas Container Line Limited, Orient Overseas Container Line (Europe) Limited, Zim Integrated Shipping Services Limited, and Hamburg Süd KG.

Filing Party: Wayne Rohde, Esq.; Sher & Blackwell LLP; 1850 M Street, NW., Suite 900; Washington, DC 20036.

Synopsis: The amendment revises the contribution of vessels under the agreement, provides for the sharing of space among the parties, makes conforming changes to the foregoing, and restates the agreement.

Agreement No.: 012085–001.

Title: 2007 Crane Purchase, Relocation and Modification Agreement Between Matson Navigation Company, Inc. and Horizon Lines, LLC.

Parties: Horizon Lines, LLC and Matson Navigation Company, Inc.

Filing Party: Matthew Thomas, Esq.; Reed Smith LLP; 301 K Street, NW. Suite 1100-East Tower; Washington, DC 20005.

Synopsis: The agreement details and clarifies the parties' authority to discuss and agree on matters related to use of cranes by third parties.

Agreement No.: 012093.

Title: CSAV/K-Line Space Charter and Sailing Agreement.

Parties: Compania Sud Americana de Vapores and Kawasaki Kisen Kaisha, Ltd.

Filing Parties: John P. Meade, Esq.; Vice-President; K-Line America, Inc.; 6009 Bethlehem Road; Preston, MD 21655.

Synopsis: The agreement authorizes the parties to exchange slots in the trade between U.S. East Coast ports and ports in Turkey.

Agreement No.: 201048–005.

Title: Lease and Operating Agreement between Philadelphia Regional Port Authority and Delaware River Stevedores, Inc.

Parties: Philadelphia Regional Port Authority and Delaware River Stevedores, Inc.

Filing Party: Paul D. Coleman, Esq.; Hoppel, Mayer & Coleman; 1050 Connecticut Avenue, NW., Tenth Floor; Washington, DC 20036.

Synopsis: The amendment revises the base rent for February and March 2010.

Agreement No.: 201160–002.

Title: Marine Terminal Lease and Operating Agreement Between Broward County and Mediterranean Shipping Company, S.A.

Parties: Broward County, Florida, and Mediterranean Shipping Company, S.A.

Filing Party: Candace J. Running; Broward County Board of County Commissioners; Office of the County Attorney; 1850 Eller Drive, Suite 502; Fort Lauderdale, FL 33316.

Synopsis: The amendment updates various provisions of the agreement.

By Order of the Federal Maritime Commission.

Dated: March 19, 2010.

Rachel E. Dickon,

Assistant Secretary.

[FR Doc. 2010–6491 Filed 3–23–10; 8:45 am]

BILLING CODE 6730–01–P

FEDERAL MARITIME COMMISSION

Ocean Transportation Intermediary License Applicants

Notice is hereby given that the following applicants have filed with the Federal Maritime Commission an application for license as a Non-Vessel-Operating Common Carrier and Ocean Freight Forwarder—Ocean Transportation Intermediary pursuant to section 19 of the Shipping Act of 1984 as amended (46 U.S.C. Chapter 409 and 46 CFR 515).

Persons knowing of any reason why the following applicants should not receive a license are requested to contact the Office of Transportation Intermediaries, Federal Maritime Commission, Washington, DC 20573.

Non-Vessel-Operating Common Carrier—Ocean Transportation Intermediary:

Radiant Global Logistics, Inc., dba Radiant Container Lines, 1227 120th Avenue, NE., Bellevue, WA 98005. Officers: Michael C. von Loesch, Vice President, International (Qualifying Individual), Bohn H. Crain, President/Director.

Major Consolidation Logistics Inc., 175–01 Rockaway Blvd., Suite 201, Jamaica, NY 11434. Officer: Wei-Dong Lu, President/VP/Secretary/Treasurer, (Qualifying Individual).

PB Direct Corporation, 700 Bishop Street, #2100, Honolulu, HI 96813. Officers: Maria Elisa B. Estrada, Vice President/Treasurer, (Qualifying Individual), Emiko K. Singh, President/Secretary.

EP Standard LLC, 7 Bell Street, #408, Montclair, NJ 07042. Officers: Paul M. Pilmanis, Vice President, (Qualifying Individual), Egils Abolins, President.

ICG Worldwide, Inc., 235 Marginal Street, Chelsea, MA 02150. Officers: John Reardon, Director, (Qualifying Individual), Paul Reardon, Director.

Link Lines Logistics Inc, 234 Main Street, Unit 1, Lincoln Park, NJ 07035. Officer: Charles B. Audi, CEO/President.

Freight Forwarding Network Corp., dba Costa Rica Carriers dba Freightnet, 10925 NW. 27th Street, #201G, Doral, FL 33171. Officers: Sergio I. Lotero, President, (Qualifying Individual), Stephen A. Blass, Secretary.

Overseas Transport USA Corp., 3107 Stirling Road, #107, Fort Lauderdale, FL 33312. Officers: Paolo Caropreso, Director/President/Treasurer, (Qualifying Individual), Oliviero Caropreso, Director/Vice President.

Magna Logistics Inc., 8505 NW. 68th Street, Miami, FL 33166. Officers: Carlos Armas, Vice President/Director, (Qualifying Individual), Orlando Tavio, President/Director.

Non-Vessel-Operating Common Carrier and Ocean Freight Forwarder Transportation Intermediary:

Reliable Shipping Services Inc., 10 Fifth Street, Suite 402, Valley Stream, NY 11581. Officers: Eleonora L. Chiavelli, President, (Qualifying Individual), Giulia Chiavelli, Vice President.

Dice Worldwide Logistics, LLC dba Dice Worldwide Logistics, 8140 NW. 29th Street, Miami, FL 33122. Officers: Patrick R. Moebel, CEO, (Qualifying Individual), Bernard S. Tcharchefdjian, President.

Freights Usa, Inc., 12903 Old Richmond Road, Suite 100, Houston, TX 77099. Officer: Hanaa Hussein, President/Secretary, (Qualifying Individual).

Apollo International Forwarders, Inc., 2455 E. Sunrise Blvd., #801, Fort Lauderdale, FL 33304. Officers: Fernando Gomez, Vice President, (Qualifying Individual), Armando J. Gomez, President.

NC Cargo LLC, 7535 NW. 52nd Street, Miami, FL 33166. Officers: Lorenzo J. Colina, Managing Member, (Qualifying Individual), Aura P. Colina, Member.

Mega Supply Chain Solutions, Inc., 9449 8th Street, Rancho Cucamonga, CA 91730. Officers: Troy T.W. Kung, Vice President, (Qualifying Individual), Karen A. Pelle, CEO.

TTS Worldwide, LLC, 2611 Waterfront Parkway East Drive, Suite 100, Indianapolis, IN 46214. Officers: Katherine A. Gerard, Vice President, Nobuyuki Suzuki, President, (Qualifying Individuals).

International Shipping Network Line, LLC, dba ISN Line, 4701 Clark

Street, Boise, ID 83705. Officers: Bryan Treadwell, Manager, (Qualifying Individual), Summer Treadwell, Member.

Cayman Consolidators, Inc., 74 NW. 25th Avenue, Miami, FL 33125. Officer: Alberto Diaz Rodriguez, President/Sec./Treasurer, (Qualifying Individual).

Lozada Corporation dba Lozada Transportation Services, 6526 Arlington Boulevard, Falls Church, VA 22042. Officers: Cristian K. Montecinos, Secretary, (Qualifying Individual), Cesar Montecinos, President/Treasurer.

Trips Logistics Corp, 6 Morgan Drive, Methuen, MA 01844. Officer: Amale S. Najjar, President/Treasurer/Secretary, (Qualifying Individual).

Global Container Line, Inc. dba Global Container Line, 1930 6th Avenue South, #401, Seattle, WA 98134. Officers: Sarah Dorscht, Senior Vice President, (Qualifying Individual), Jason Totah, President/CEO.

Barthco International, Inc. dba OHL-International, 5101 S. Broad Street, Philadelphia, PA 19112. Officers: Alberto B. Benki, Senior Vice President, (Qualifying Individual), Scott McWilliams, CEO.

Mallory Alexander International Logistics, LLC, dba TradeSource, 1 Cordes Street Charleston, SC 29401. Officers: W. Neely Mallory, III, President, (Qualifying Individual), W. Neely Mallory, Jr., CEO.

Ocean Freight Forwarder—Ocean Transportation Intermediary:

Jeffery Raymond Sewell dba Cargo Unlimited Worldwide, 74–854 Velie Way, #10, Palm Desert, CA 92260. Officer: Jeffery R. Sewell, Sole Proprietor, (Qualifying Individual).

Razak Logistics, Inc., 28451 Ficus Court, Murrieta, CA 92563. Officer: Farhan Qureshi, President/Secretary/Treasurer, (Qualifying Individual).

U.S. Africa Freight, Inc. dba U.S. Africa Shipping, dba U.S. 2 Africa Freight, 930 Hoffner Avenue, Orlando, FL 32809. Officers: Esthela Montgomery, Secretary/Operations Manager, (Qualifying Individual), Neil E. Barclay, Director/Treasurer.

Dated: March 19, 2010.

Rachel E. Dickon,

Assistant Secretary.

[FR Doc. 2010–6557 Filed 3–23–10; 8:45 am]

BILLING CODE 6730–01–P

FEDERAL MARITIME COMMISSION

Ocean Transportation Intermediary License Reissuance

Notice is hereby given that the following Ocean Transportation Intermediary license has been reissued by the Federal Maritime Commission pursuant to section 19 of the Shipping Act of 1984 (46 U.S.C. Chapter 409) and the regulations of the Commission pertaining to the licensing of Ocean Transportation Intermediaries, 46 CFR Part 515.

License No.	Name/Address	Date reissued
012142NF	Seaborne International, Inc. dba Seaborne Express Line, 8901 South La Cienega Blvd., Suite 101, Inglewood, CA 90301.	February 6, 2010.

Sandra L. Kusumoto,

Director, Bureau of Certification and Licensing.

[FR Doc. 2010–6553 Filed 3–23–10; 8:45 am]

BILLING CODE 6730–01–P

GOVERNMENT ACCOUNTABILITY OFFICE

Advisory Council on Government Auditing Standards; Notice of Meeting

The Advisory Council on Government Auditing Standards will meet Thursday, April 22, 2010, from 8:15 a.m. to 3:30 p.m., in the Staats Briefing Room (7C13) of the Government Accountability Office Building, 441 G Street, NW., Washington, DC.

The Advisory Council on Government Auditing Standards will hold a meeting to discuss updates and revisions of the 2007 Revision of Government Auditing Standards. The meeting is open to the public. Members of the public will be provided an opportunity to address the Council with a brief (five minute) presentation in the afternoon on matters directly related to the proposed update and revision.

Any interested person who plans to attend the meeting as an observer must contact Jennifer Allison, Council Administrator, 202–512–3423. A form of picture identification must be presented to the GAO Security Desk on the day of the meeting to obtain access to the GAO building. For further information, please contact Mrs. Allison. Please check the Government Auditing Standards Web page (*http://www.gao.gov/govaud/ybk01.htm)* one week prior to the meeting for a final agenda.

[Pub. L. 67–13, 42 Stat. 20 (June 10, 1921)]

Dated: March 19, 2010.

James R. Dalkin,

Director, Financial Management and Assurance.

[FR Doc. 2010–6526 Filed 3–23–10; 8:45 am]

BILLING CODE 1610–02–P

DEPARTMENT OF HEALTH AND HUMAN SERVICES

Substance Abuse and Mental Health Services Administration

Agency Information Collection Activities: Submission for OMB Review; Comment Request

Periodically, the Substance Abuse and Mental Health Services Administration (SAMHSA) will publish a summary of information collection requests under OMB review, in compliance with the Paperwork Reduction Act (44 U.S.C. Chapter 35). To request a copy of these documents, call the SAMHSA Reports Clearance Officer on (240) 276–1243.

Proposed Project: Transformation Accountability (TRAC) Reporting System —(OMB No. 0930–0285)—Revision

SAMHSA's CMHS is requesting approval for a revision to the National Outcome Measures (NOMs) for Consumers Receiving Mental Health Services. The name of this data collection effort is revised to the Transformation Accountability (TRAC) Reporting System (hereafter referred to as TRAC) to enable SAMHSA CMHS to consolidate its performance reporting activities within one package. This request includes a revision of the currently approved client-level data collection effort for programs providing direct services; additional questions will enable CMHS to more fully explain grantee performance in relation to Agency and/or program objectives. This request also includes the addition of data collection from Project Directors of grants engaged in infrastructure development, prevention, and mental health promotion activities. These new instruments will enable SAMHSA CMHS to capture a standardized set of

performance indicators using a uniform reporting method.

These proposed data activities are intended to promote the use of consistent measures among CMHS grantees and technical assistance contractors. These common measures recommended by CMHS are a result of extensive examination and recommendations, using consistent criteria, by panels of staff, experts, and grantees. Wherever feasible, the proposed measures are consistent with or build upon previous data development efforts within CMHS. These data collection activities will be organized to reflect and support the domains specified for SAMHSA's NOMs for programs providing direct services, and the categories developed by CMHS to specify infrastructure development, prevention, and mental health promotion activities.

Client-Level Data Collection

The currently approved data collection effort for the SAMHSA CMHS programs that provide direct services to consumers includes separate data collection forms that are parallel in design for use in interviewing adults and children (or their caregivers for children under the age of 11 years old). These SAMHSA TRAC data will be collected at baseline, at six month reassessments for as long as the consumer receives services, and at discharge. The proposed data collection encompasses eight of the ten SAMHSA NOMs domains.

Domain	Number of questions: adult	Number of questions: caregiver and child/adolescent
Access/Capacity	4	4
Functioning	28	26
Stability in Housing	1	2
Education and Employment	4	3
Crime and Criminal Justice	1	1
Perception of Care	15	14
Social Connectedness	4	4
Retention [1]	5	5
Total Number	63	59

[1] Retention is defined as retention in the community. The indicator is based on use of psychiatric inpatient services, which is based on a measure from the Stability in Housing Domain.

Changes to the current instruments include the following:

- The administrative section of all instruments was changed to allow grantees to capture and track when consumers refuse interviews, consent cannot be obtained from proxy, and consumers are impaired or unable to provide consent. The administrative section of the children's instruments was additionally changed to capture whether the respondent is the child or his/her caregiver.
- Questions were added to all instruments to capture general health, psychological functioning, life in the community, and substance use.
- CMHS reduced the data collection requirement for 3-month programs to be consistent with 6-month programs; all grant programs will now be required to collect the client-level interviews in 6-month intervals, and CMHS will require the completion of clinical discharge interviews.

In addition to questions asked of consumers as listed above, programs will be required to abstract information from consumer records regarding the services provided. The time to complete the revised instruments is estimated as shown below. These estimates are based on grantee reports of the amount of time required to complete the currently approved instruments accounting for the additional time required to complete the new questions, as based on an informal pilot.

Infrastructure Development, Prevention, and Mental Health Promotion Performance Data Collection

CMHS has identified categories and associated grant- or community-level indicators to assess performance of grant programs engaged in infrastructure development, prevention, and mental health promotion activities. Upon approval of the indicators, a Web-based data entry system will be developed to capture this performance data for all CMHS-funded grants engaged in infrastructure development, prevention, and mental health promotion activities. Not all categories or indicators will apply to every grant program; CMHS Program Directors will be responsible for determining whether a category (or an indicator within a category) applies to each grant program, establishing targets at the grant level, and monitoring data submission. The following table summarizes the total number of indicators for each category that may or may not apply to each grant program:

Category	Number of indicators
Policy Development	2
Workforce Development	5
Financing	3
Organizational Change	1
Partnerships/Collaborations	2
Accountability	6
Types/Targets of Practices	4
Awareness	1
Training	1
Knowledge/Attitudes/Beliefs	1
Screening	1
Outreach	2
Referral	1
Access	1
Total Number	31

Grantee Project Directors will be responsible for submitting data pertaining to these indicators quarterly. The use of standardized domains and data collection approaches will enhance aggregate data development and reporting.

Following is the estimated annual response burden for this effort.

ESTIMATE OF ANNUAL RESPONSE BURDEN

Type of response	Number of respondents	Responses per respondent	Total responses	Hours per response	Total hour burden
Client-level baseline interview	15,681	1	15,681	0.333	5,222
Client-level 6-month reassessment interview	10,646	1	10,646	0.367	3,907
Client-level discharge interview	4,508	1	4,508	0.367	1,655
Client-level baseline chart abstraction	2,352	1	2,352	0.1	235
Client-level reassessment chart abstraction	9,017	1	9,017	0.1	902
Client-level Subtotal	15,681		15,681		11,920
Infrastructure development, prevention, and mental health promotion quarterly record abstraction	942	4	3,768	4	15,072
Total	16,623				26,992

Written comments and recommendations concerning the proposed information collection should be sent by April 23, 2010 to: SAMHSA Desk Officer, Human Resources and Housing Branch, Office of Management and Budget, New Executive Office Building, Room 10235, Washington, DC 20503; due to potential delays in OMB's receipt and processing of mail sent through the U.S. Postal Service, respondents are encouraged to submit comments by fax to: 202–395–6974.

Dated: March 17, 2010.

Elaine Parry,

Director, Office of Program Services.

[FR Doc. 2010–6457 Filed 3–23–10; 8:45 am]

BILLING CODE 4162–20–P

DEPARTMENT OF HEALTH AND HUMAN SERVICES

Centers for Disease Control and Prevention

[30Day–10–10AD]

Agency Forms Undergoing Paperwork Reduction Act Review

The Centers for Disease Control and Prevention (CDC) publishes a list of information collection requests under review by the Office of Management and Budget (OMB) in compliance with the Paperwork Reduction Act (44 U.S.C. Chapter 35). To request a copy of these requests, call the CDC Reports Clearance Officer at (404) 639–5960 or send an e-mail to *omb@cdc.gov.* Send written comments to CDC Desk Officer, Office of Management and Budget, Washington, DC or by fax to (202) 395–5806. Written comments should be received within 30 days of this notice.

Proposed Project

School Dismissal Monitoring System—Existing Data Collection without an OMB Number—National Center for Emerging and Zoonotic Infectious Diseases (NCEZID) (proposed), Centers for Disease Control and Prevention (CDC).

Background and Brief Description

During the spring 2009 H1N1 outbreak, the U.S. Department of Education (ED) and the Centers for Disease Control and Prevention (CDC) received numerous daily requests about the overall number of school dismissals nationwide including the number of students and teachers impacted by the outbreak. Illness among school-aged students (K–12) in many States and cities resulted in at least 1351 school dismissals due to rapidly increasing absenteeism among students or staff that impacted at least 824,966 students and 53,217 teachers.

Although a system was put in place to track school closures in conjunction with the Department of Education (ED), no formal monitoring system was established, making it difficult to monitor reports of school dismissal and to gauge the impact of the outbreak.

CDC has recently issued guidance for school closure for the 2009–2010 school year. To address the need to monitor reports of school closure, CDC and ED have established a School Dismissal Monitoring System to report on novel influenza A (H1N1)-related school or school district dismissals in the United States. Although the School Dismissal Monitoring System is currently approved to collect data under OMB Control Number 0920–0008, Emergency Epidemic Investigations, CDC would like to continue the data collection long term. Thus, CDC is requesting a separate OMB Control Number for this data collection.

The purpose of the School Dismissal Monitoring System is to generate accurate, real-time, national summary data daily on the number of school dismissals and the number of students and teachers impacted by the school dismissals. CDC will use the summary data to fully understand how schools are responding to CDC community mitigation guidance among schools, students, household contacts and for overall awareness of the impact of influenza outbreaks on school systems and communities.

Respondents are schools, school districts, and local public health agencies. Respondents will use a common reporting form to submit data to CDC. The reporting form includes the following data elements: Name of school district; zip code of school district; date the school or school district was dismissed; and the date school or school district is projected to reopen. Optional data elements include: Name of person submitting information; the organization/agency; phone number of the organization/agency; and e-mail address. There is no cost to respondents other than their time to complete the data collection. The total annualized burden for this information collection request is 42 hours.

ESTIMATE OF ANNUALIZED BURDEN HOURS

Respondent	Number of respondents	Responses per respondent	Average burden per respondent (in hours)
School, school district or public health department	500	1	5/60

Dated: March 17, 2010.

Maryam I. Daneshvar,

Reports Clearance Officer, Centers for Disease Control and Prevention.

[FR Doc. 2010–6523 Filed 3–23–10; 8:45 am]

BILLING CODE 4163–18–P

DEPARTMENT OF HEALTH AND HUMAN SERVICES

Centers for Disease Control and Prevention

[30Day–10–0600]

Agency Forms Undergoing Paperwork Reduction Act Review

The Centers for Disease Control and Prevention (CDC) publishes a list of information collection requests under review by the Office of Management and Budget (OMB) in compliance with the Paperwork Reduction Act (44 U.S.C. Chapter 35). To request a copy of these requests, call the CDC Reports Clearance Officer at (404) 639–5960 or send an e-mail to *omb@cdc.gov.* Send written comments to CDC Desk Officer, Office of Management and Budget, Washington, DC or by fax to (202) 395–5806. Written comments should be received within 30 days of this notice.

Proposed Project

Model Performance Evaluation Program for *Mycobacterium tuberculosis* and Non-tuberculous Mycobacterium Drug Susceptibility Testing (OMB Control No. 0920–0600, expiration date 03/31/2010)—Revision—National Center for Preparedness, Detection, and Control of Infectious Diseases (NCPDCID), Centers for Disease Control and Prevention (CDC).

Background and Brief Description

As part of the continuing effort to support both domestic and global public health objectives for treatment of tuberculosis (TB), prevention of multi-drug resistance, and surveillance programs, CDC is requesting approval from the Office of Management and Budget to revise a currently approved data collection, the Model Performance Evaluation Program for *Mycobacterium tuberculosis* and Non-tuberculous Mycobacterium Drug Susceptibility Testing. This request includes changes to the Results Form and re-introduction of the Laboratory Practices Questionnaire.

While the overall number of cases of TB in the U.S. has decreased, rates still remain high among foreign-born persons, prisoners, homeless populations, and individuals infected with HIV in major metropolitan areas. The rate of TB cases detected in foreign-born persons has been reported to be more than nine times higher than the rate among the U.S. born population. CDC's goal to eliminate TB will be virtually impossible without considerable effort in assisting heavy disease burden countries in the reduction of tuberculosis. The Model Performance Evaluation Program for *Mycobacterium tuberculosis* and Non-tuberculous Mycobacterium Drug Susceptibility Testing program supports this role by monitoring and evaluating the level of performance and practices among national and international laboratories performing *M. tuberculosis* susceptibility testing. Participation in this program is one way laboratories can ensure high-quality laboratory testing, resulting in accurate and reliable testing results.

By providing an evaluation program to assess the ability of the laboratories to test for drug resistant *M. tuberculosis* and selected strains of Non-tuberculous *Mycobacteria* (NTM), laboratories also have a self-assessment tool to aid in optimizing their skills in susceptibility testing. The information obtained from laboratories on susceptibility testing practices and procedures is used to establish variables related to good performance, assessing training needs, and aid with the development of practice standards.

Participants in this program include clinical and public health laboratories. Participants register by submitting an Enrollment Form. Data collection from domestic laboratory participants occurs twice per year. The data collected in this program will include the susceptibility test results of primary and secondary drugs, drug concentrations, and test methods performed by laboratories on a set of performance evaluation (PE) samples. The PE samples are sent to participants twice a year. Participants also report demographic data such as laboratory type and the number of tests performed annually. Participants report this data every two years. The burden for the Laboratory Practices Questionnaire has been adjusted for the average per year, since responses are received every other year. Participants may submit changes about their laboratory using the Laboratory Information Change Form.

There is no cost to respondents to participate other than their time. The total annualized burden for this information collection request is 166 hours.

ESTIMATE OF ANNUALIZED BURDEN HOURS

Form	Respondents	Number of respondents	Number of responses per respondent	Average burden per response (in hours)
Enrollment form	Labs	4	1	5/60
Laboratory Change form	Labs	4	1	5/60
Susceptibility Testing Results Form	Labs	132	2	30/60
Laboratory Practices Questionnaire	Labs	66	1	30/60

Dated: March 17, 2010.

Maryam I. Daneshvar,

Acting Reports Clearance Officer, Centers for Disease Control and Prevention.

[FR Doc. 2010–6520 Filed 3–23–10; 8:45 am]

BILLING CODE 4163–18–P

DEPARTMENT OF HEALTH AND HUMAN SERVICES

Health Resources and Services Administration

Agency Information Collection Activities: Submission for OMB Review; Comment Request

Periodically, the Health Resources and Services Administration (HRSA) publishes abstracts of information collection requests under review by the Office of Management and Budget (OMB), in compliance with the Paperwork Reduction Act of 1995 (44 U.S.C. Chapter 35). To request a copy of the clearance requests submitted to OMB for review, call the HRSA Reports Clearance Office on (301) 443–1129.

The following request has been submitted to the Office of Management and Budget for review under the Paperwork Reduction Act of 1995:

Proposed Project: Evaluation of the State Early Childhood Comprehensive Systems Grant (ECCS) Program: New

HRSA's Maternal and Child Health Bureau (MCHB) is conducting an assessment of MCHB's State Early Childhood Comprehensive Systems Grant (ECCS) Program. The purpose of the ECCS Program is to assist States and Territories in their efforts to build and implement statewide Early Childhood Comprehensive Systems that support families and communities in their development of children that are healthy and ready to learn at school entry. These systems must be multi-agency and be comprised of the key public and private agencies that provide services and resources to support families and communities in providing for the healthy physical, social, and emotional development of all young children. Grantees are also charged with addressing seven key elements of early childhood comprehensive systems: (1) Governance, (2) financing, (3) communications, (4) family leadership development, (5) provider/practitioner support, (6) standards, and (7) monitoring/accountability. ECCS funding is offered to 52 States and Jurisdictions.

An evaluation will be conducted to: (1) Identify and analyze the strategies that grantees and partners are using to build comprehensive early childhood systems, (2) measure the level of progress grantees have made in meeting both the overarching Federal goals and objectives for ECCS grantees and those of their statewide plans, and (3) assess the effectiveness of grantees' early childhood systems development activities. The information from the evaluation will supplement and enhance MCHB's current data collection efforts by providing a quantifiable, standardized, systematic mechanism for collecting information across the funded implementation grantees. The results will also provide MCHB with timely feedback on the achievements of the ECCS Program and identify potential areas for improvement which will inform program planning and operational decisions.

Data collection tools for which OMB approval is being requested include Web-based surveys, telephone interviews, and a Web-based indicator reporting system. Web-based surveys are intended to collect information from all grantees regarding the structure and functioning of the State Team, the nature of activities, and perceptions of progress made in achieving outcomes. One survey will be directed at ECCS Coordinators while a second similar, but shorter survey will be directed at selected State Team members (5 State Team members from each State). The telephone interviews will be conducted with ECCS Coordinators to collect more detailed information on how early childhood services have been integrated, challenges and successes of implementation, and how the activities are designed to improve the lives of children and families. ECCS Coordinators will also be asked to enter information on three early child and family outcome indicators and provide a theory of change, or rationale, on how a specific ECCS activity or set of related activities will produce a measurable change in each outcome indicator.

Respondents: ECCS Coordinators and State Team members from the 52 grantees will be the primary respondents for the instruments. The estimated response burden is as follows:

ESTIMATE ANNUALIZED BURDEN TABLE

Forms	Type of respondent	Number of respondents	Number of responses per respondent	Average burden hours per response	Total burden hours
Web-based Survey	ECCS Coordinators	52	1	0.75	39
Web-based Survey	State Team Members	260	1	0.3	78
Telephone Interview	ECCS Coordinators	52	1	1.75	91
Indicator Reporting System	ECCS Coordinators	52	1	1.5	78
Total		416			286

Written comments and recommendations concerning the proposed information collection should be sent within 30 days of this notice to the desk officer for HRSA, either by e-mail to OIRA *submission@omb.eop.gov* or by fax to 202–395–6974. Please direct all correspondence to the "attention of the desk officer for HRSA."

Dated: March 15, 2010.

Sahira Rafiullah,

Director, Division of Policy and Information and Coordination.

[FR Doc. 2010–6437 Filed 3–23–10; 8:45 am]

BILLING CODE 4165–15–P

DEPARTMENT OF HEALTH AND HUMAN SERVICES

National Institutes of Health

National Institute of Child Health and Human Development; Revision to Proposed Collection; Comment Request; the National Children's Study, Vanguard (Pilot) Study

SUMMARY: In compliance with the requirement of Section 3506(c)(2)(A) of

the Paperwork Reduction Act of 1995, for opportunity for public comment on proposed data collection projects, the National Institute of Child Health and Human Development (NICHD), the National Institutes of Health (NIH) will publish periodic summaries of proposed projects to be submitted to the Office of Management and Budget (OMB) for review and approval.

Proposed Collection:

Title: The National Children's Study, Vanguard (Pilot) Study

Type of Information Collection Request: Revision

Need and Use of Information Collection: The purpose of the proposed methodological study is to evaluate the feasibility, acceptability, and cost of three separate recruitment strategies for enrollment of pregnant women into a prospective, national longitudinal study of child health and development. This study is one component of a larger group of studies being conducted during the Vanguard Phase of the National Children's Study (NCS). In combination, these studies will be used to inform the design of the Main Study of the National Children's Study.

Background: The National Children's Study is a prospective, national longitudinal study of the interaction between environment, genetics on child health and development. The Study defines "environment" broadly, taking a number of natural and man-made environmental, biological, genetic, and psychosocial factors into account. By studying children through their different phases of growth and development, researchers will be better able to understand the role these factors have on health and disease. Findings from the Study will be made available as the research progresses, making potential benefits known to the public as soon as possible. The National Children's Study is led by a consortium of federal partners: the U.S. Department of Health and Human Services (including the Eunice Kennedy Shriver National Institute of Child Health and Human Development and the National Institute of Environmental Health Sciences of the National Institutes of Health and the Centers for Disease Control and Prevention), and the U.S. Environmental Protection Agency.

To conduct the detailed preparation needed for a study of this size and complexity, the NCS was designed to include a preliminary pilot study known as the Vanguard Study. The purpose of the Vanguard Study is to assess the feasibility, acceptability, and cost of the recruitment strategy, study procedures, and outcome assessments that are to be used in the NCS Main Study. The Vanguard Study begins prior to the NCS Main Study and will run in parallel with the Main Study. At every phase of the NCS, the multiple methodological studies conducted during the Vanguard phase will inform the implementation and analysis plan for the Main Study.

The Vanguard Study was designed to enroll approximately 1,750 pregnant women through seven study locations after 12 months of data collection. Two of the locations began recruitment in January 2009 and the remaining 5 in April 2009. As of March 2010, however, approximately 700 pregnant women have been enrolled, leading to questions about the assumptions underlying the Vanguard Study recruitment model.

Under this proposed plan, additional sites will be added to the Vanguard Study, both to increase enrollment in the Vanguard Study and to evaluate the feasibility, acceptability and cost of three separate recruitment strategies for enrollment of pregnant women into the NCS. The seven currently enrolled sites use a household enumeration and screening strategy to identify eligible women for recruitment into the study. Although household enumeration is often considered the gold standard for reducing sampling bias, in that all dwelling units are canvassed for eligibility, for the NCS Vanguard Study this method has not yielded the target number of births projected from initial models. Although current enumeration rates (~85%) and current consent rates (~60%) are comparable to other birth cohort studies, they yielded fewer pregnant women and births than originally estimated. Study planners are thus investigating alternate methods to increase enrollment rates and ultimately the number of women and children enrolled in the study.

Research Goal: The guiding research goal for this methodological study is identification of recruitment strategies and components of recruitment strategies that are most effective to identify, recruit and enroll sufficient numbers of eligible participants into a population based cohort study.

Methods: We propose to add as many as 30 additional sites to the Vanguard Cohort in order to ensure an adequate cohort size. The additional sites will be chosen from among those already identified for the Main Study of the NCS. These selected Study Centers represent a range of demographic and other characteristics that will be important for the NCS' evaluation of recruitment strategies, including racial and ethnic backgrounds, languages spoken, socioeconomic status, education level, population density and urbanicity, and geographic region of the United States, but they do not constitute a statistically representative sample. Across these additional sites, we will compare three alternate recruitment strategies. Each of the alternative strategies is designed to identify and recruit age- and geographically-eligible women to participate in the study, while retaining the probability basis of the sample. Women targeted for enrollment include both pregnant women and women who are not pregnant but who might become pregnant in the future. Women must be part of the probability sample; that is, they must reside in a preselected study segment. The provider-based recruitment method relies on health care providers for assistance in participant identification and recruitment. The enhanced household recruitment method builds on the lessons learned in the existing Vanguard Study by enhancing enumeration techniques and a more streamlined recruitment process. The two-tiered recruitment method relies on larger secondary sampling units to increase the number of geographically-eligible women in a given area. We describe anticipated features of each strategy below.

We will evaluate the feasibility (technical performance), acceptability (respondent tolerance and impact on study infrastructure), and cost (operations, time, and effort) of each strategy using pre-determined measures. We will compare these findings and use them as a basis to inform the strategies, or combinations of strategies, that might be used in the Main Study of the NCS.

Provider-Based Recruitment Strategy: The goal of this strategy is to introduce the NCS through the existing health care system, by providing pregnant and other age-eligible women with information about the NCS via health care providers in a familiar and trusted environment. A group of Vanguard Study sites will develop lists of health care providers who serve women in the geographically-eligible segments. These providers will receive information about the NCS and would be invited to participate collaboratively in efforts to identify potentially eligible women and to inform them about the study. It is expected that a variety of strategies to inform and engage potential participants will be used once women express interest, depending on the specific setting. For example in more rural communities, where one provider sees most of the patients, NCS staff may decide to co-locate in the providers office to provide information and recruit participants into the study. In more

urban areas, where there are multiple providers, the provider may decide to simply provide information about the study to their patients and a phone number or additional contact information for patients to contact the study center. Study staff (not providers) will be available to eligible women to answer questions about the study. The Study staff will check the geographic eligibility of potential study participants; segment boundaries will not be communicated to non-Study staff. To maintain the household-based probability sampling frame, NCS staff will only actually recruit women identified in the heath care provider settings that live in the identified sample segments. Using estimates from the original Vanguard Study proposal, less enumeration efforts and efficiencies gained from field experience, we estimate this recruitment strategy will require 27,800 respondent burden hours over the first two years of data collection. (For reference, the original Vanguard Study proposed expending 37,042 respondent burden hours for the same data collection period.)

The provider-based recruitment strategy draws on the advantages of utilizing a trusted source for initial introduction to the study, an approach used effectively in many other studies. Additionally, as compared to other recruitment strategies, this approach enhances identification of pregnant women by centering recruitment activities at places of prenatal care and other locations that pregnant women visit for health care. As such, this approach is likely to be more cost effective than other less targeted efforts. Like the other recruitment strategies considered, it retains a household-based probability sampling design. However, one disadvantage of this approach is that it focuses on identification of women receiving prenatal care. In 2005, it was estimated that 3.5% of pregnant women in the U.S. had no prenatal care or began prenatal care in the third trimester. One way to address the potential under representation of women who do not seek early prenatal care is to develop lists of providers encompassing a wide range of health care facilities, including emergency care and public health clinics, and then to systematically evaluate coverage (or under-coverage) as children are born into the Study. The NCS also allows recruitment through the end of the hospital stay associated with labor, delivery and birth, thus it would be possible to invite women who do not receive prenatal care to join the study during the perinatal period. Another potential limitation is that characteristics of the provider, provider staff, or setting may result in selection bias regarding the presentation of information about the NCS to potentially eligible women. This potential bias will be assessed as the strategy is implemented. Furthermore, with the geographic sampling approach we will have the ability to compare actual recruitment to the targeted population through analyses of birth certificate data.

Enhanced Household Enumeration Strategy: The enhanced household enumeration recruitment model would improve our ability to identify pregnant women by using enumerators trained in best practices to assist in the most labor-intensive and among the most important aspects of the study. The enhanced household enumeration recruitment model would primarily utilize these staff directly as enumerators, but could also use the best of the enumerators to train new enumerators at study centers, or a combination of the two. Techniques for contacting participants will need to continue to be refined over time to ensure the study reaches hard-to-reach individuals. Using estimates from the original Vanguard Study proposal, less efficiencies in enumeration efforts and other aspects of field work based on field experience, we estimate this recruitment strategy will require 32,230 respondent burden hours over the first two years of data collection. (For reference, the original Vanguard Study proposed expending 37,042 respondent burden hours for the same data collection period.)

The enhanced household recruitment model is considered by many to make use of the gold standard for recruiting an unbiased sample, thereby increasing the generalizability of the resulting data. It relies on established enrollment methods used in other large-scale observation studies, and is most compatible with the existing probability-based sample, since it is not susceptible to external lists that may have coverage issues. However, household enumeration, even when maximally efficient, is time, labor, and cost intensive. Some households are difficult to contact. Additionally, given the fairly high observed enumeration and consent rates in the original Vanguard Center effort, this method may not yield a sufficient increase in enrollment rates over the current method. The method also is dependent upon recruiting and retaining an adequate number of expert enumerators to scale up for the target population of the Main Study.

Two-Tiered Recruitment Strategy: The two-tiered recruitment strategy has several goals. Like the provider-based recruitment strategy and the enhanced household recruitment strategy, the two-tiered recruitment strategy aims to increase enrollment in the Study. The two-tier strategy would do this using two means. First, the two-tiered strategy would increase the number of identified pregnant women by increasing the area determining geographic eligibility into the Vanguard study. Second, the two-tiered strategy would facilitate participation in the Study by administering a lower intensity data collection effort initially; after a period of time during which rapport may be developed, we would then invite a subsample of participants to join a higher intensity data collection (that is, the current full protocol). In this way, we would attempt to increase the enrollment of women who might be initially reluctant join the full study protocol.

The major goals of the two-tier strategy also include generating data to gauge the desired size of the secondary sampling units necessary to yield enrollment targets, and developing information needed to better estimate bias between women who chose to participate in the low intensity data collection and the high intensity data collection. These analyses will significantly benefit Study recruitment planning, regardless of which of the alternate recruitment strategies are found to be most efficient.

In the two-tier approach, the primary sampling units (that is, counties or groups of counties) would remain the same as in the original sampling frame, but the geographic areas selected for the secondary sampling units would be larger (for example, larger clusters of census blocks) than those used for the original Vanguard Study locations. From these comparatively larger secondary sampling units, tertiary sampling units would be selected. These tertiary sampling units would comprise smaller clusters of census blocks and would be similar in size to the secondary sampling units employed in the original Vanguard Study and in the provider-based and enhanced household based recruitment strategies.

In the two-tiered recruitment strategy, age-eligible women residing in the secondary sampling units and in the tertiary sampling units would be asked to participate in a low intensity data collection effort. This effort would be collected by mail or other self-administered means. After a period of time during which rapport may be established between the participant and

the data collector, age-eligible women residing in the tertiary sampling units would also be invited to participate in the high intensity data collection, which is the current Vanguard Study protocol. If a woman eligible to participate in the high intensity collection effort declines, she may continue participating in the low intensity effort.

Based on data collected to date, and assuming no household enumeration or provider-referrals, we anticipate that the secondary sampling units would need to be three times larger than the original Vanguard Study secondary sampling units to identify the required number of pregnant women within the Study's timeframe. Accordingly, assuming age-sex eligible targets three times larger than those in the original Vanguard Study proposal, an approximate 80% participation rate to the initial screener, an approximate 65% consent rate to minimal, self-administered data collection at approximately 30 minutes each 6 month period, less enumeration effort and efficiencies in other aspects of field work based on field experience, we estimate the low intensity tier recruitment strategy will require 78,222 respondent burden hours over the first two years of data collection. For the high intensity tier strategy, assuming respondent burden estimates from the original Vanguard Study proposal, less enumeration efforts and efficiencies gained from field experience, we estimate this recruitment strategy will require 27,800 respondent burden hours over the first two years of data collection. Combined, this recruitment strategy would require approximately 106,022 respondent burden hours over a two year period. (For reference, the original Vanguard Study proposed expending 37,042 respondent burden hours for the same data collection period.)

There are several goals of this recruitment strategy that recommend it despite comparatively higher estimated respondent burden. The two-tier strategy allows the opportunity to engage women participating in the low intensity data collection effort and build trust before participants are asked to consider joining the high intensity effort. This aspect may increase the likelihood of participation in the high intensity data collection (that is, the full protocol) as compared to the other alternate recruitment strategies. This strategy also fits within the existing probability-based sampling frame for the Main Study. Women that decide to leave the high intensity data collection may remain within the study in a structured context in the low intensity setting. Additionally, the two-tier strategy offers a means to gauge the size of geographic areas that might be necessary for reaching alternative enrollment targets and to systematically compare bias in enrollment between high and low intensity groups—analyses that will benefit the design of the Main NCS study regardless of which recruitment strategies are ultimately chosen.

Frequency of Response: See above descriptions.

Affected Public: Pregnant women and their children

The annualized cost to respondents over the two year data collection period for all three recruitment strategies combined is estimated at $1,660,520 (based on $10 per hour). There are no Capital Costs to report. There are no Operating or Maintenance Costs to report.

Request for Comments: Written comments and/or suggestions from the public and affected agencies are invited on one or more of the following points: (1) Whether the proposed collection of information is necessary for the proper performance of the function of the agency, including whether the information will have practical utility; (2) The accuracy of the agency's estimate of the burden of the proposed collection of information, including the validity of the methodology and assumptions used; (3) Ways to minimize the burden of the collection of information on those who are to respond, including the use of appropriate automated, electronic, mechanical, or other technological collection techniques or other forms of information technology.

FOR FURTHER INFORMATION CONTACT: To request more information on the proposed project or to obtain a copy of the data collection plans and instruments, contact Dr. Sarah L. Glavin, Deputy Director, Office of Science Policy, Analysis and Communication, National Institute of Child Health and Human Development, 31 Center Drive Room 2A18, Bethesda, Maryland 20892, or call non-toll free number (301) 496–1877 or e-mail your request, including your address, to *glavins@mail.nih.gov.*

Comments Due Date: Comments regarding this information collection are best assured of having their full effect if received within 60 days of the date of this publication.

Dated: March 18, 2010.

Sarah L. Glavin,

Deputy Director, Office of Science Policy, Analysis and Communications, National Institute of Child Health and Human Development, National Institutes of Health.

[FR Doc. 2010–6434 Filed 3–23–10; 8:45 am]

BILLING CODE 4140–01–P

DEPARTMENT OF HEALTH AND HUMAN SERVICES

National Institutes of Health

Government-Owned Inventions; Availability for Licensing

AGENCY: National Institutes of Health, Public Health Service, HHS.

ACTION: Notice.

SUMMARY: The inventions listed below are owned by an agency of the U.S. Government and are available for licensing in the U.S. in accordance with 35 U.S.C. 207 to achieve expeditious commercialization of results of federally-funded research and development. Foreign patent applications are filed on selected inventions to extend market coverage for companies and may also be available for licensing.

ADDRESSES: Licensing information and copies of the U.S. patent applications listed below may be obtained by writing to the indicated licensing contact at the Office of Technology Transfer, National Institutes of Health, 6011 Executive Boulevard, Suite 325, Rockville, Maryland 20852–3804; telephone: 301/496–7057; fax: 301/402–0220. A signed Confidential Disclosure Agreement will be required to receive copies of the patent applications.

Novel Regulatory B Cells for Treatment of Cancer and Autoimmune Disease

Description of Invention: The manner by which cancers evade the immune response is not well-understood. What is known is that the manner is an active process that regulates immune responses employing at least two types of suppressive cells, myeloid-derived suppressive cells and regulatory T cells (Tregs), a key subset of $CD4^+$ T cells that controls peripheral tolerance to self- and allo-antigens. Tregs are considered to play a key role in the escape of cancer cells from anti-tumor effector T cells.

Cancer cells have been found to directly activate resting B cells to form suppressive regulatory B cells (tBregs) and utilize them to evade immune surveillance and mediate metastasis. tBregs directly inhibit $CD4^+$ and $CD8^+$ T cell activity in a cell contact-dependent

manner, induce FoxP3+ T cell activity, and promote Treg-dependent metastasis.

Researchers from the National Institute on Aging (NIA), NIH, have developed methods for the generation of tBregs, and for using tBregs to produce Tregs, and methods that inactivate or deplete tBregs. These methods have significant therapeutic value in the combat with cancer immune escape and metastasis, and in the control of harmful autoimmune diseases.

Applications:

- Production of cellular cancer vaccines.
- Treatments for immune-mediated disorders.
- Treatments for cancer.
- Treatments for chronic viral infections.

Development Status: The technology is currently in the pre-clinical stage of development.

Inventors: Arya Biragyn and Purevdorj Olkhanud (NIA).

Patent Status: U.S. Provisional Application No. 61/302,074 filed 05 Feb 2010 (HHS Reference No. E–101–2010/0–US–01).

Licensing Status: Available for licensing.

Licensing Contact: Patrick P. McCue, Ph.D.; 301–435–5560; *mccuepat@mail.nih.gov*.

Collaborative Research Opportunity: The Immunotherapeutics Unit, National Institute on Aging, is seeking statements of capability or interest from parties interested in collaborative research to further develop, evaluate, or commercialize the utilization of regulatory B cells to control autoimmune diseases and strategies that inactivate tBregs to control cancer immune escape. Please contact Nicole Darack, Ph.D. at 301–435–3101 or *darackn@mail.nih.gov* for more information.

A New Transmission Blocking Vaccine for Leishmania Infection

Description of Invention: A novel transmission blocking vaccine has been developed that can eliminate or reduce the number of *Leishmania chagasi* parasites in the gut of the sand fly species, *Lutzomyia longipalpis.* The vaccine involves the production of antibodies to the sand fly midgut protein, LP1, which is normally expressed in the midgut of the sand fly during a blood meal. This vaccine could potentially block parasite transmission from the sand fly to mammalian hosts and significantly reduce the incidence of leishmaniasis in endemic areas of the world such as Brazil, India, and Indonesia where leishmaniasis accounts for over 58,000 deaths annually.

Studies have shown that LP1 antibodies produced by immunized mice are able to reduce the number of *L. chagasi* parasites that develop in the midgut of *Lu. longipalpis.* These results illustrate the potential use of the protein as a vaccine to immunize dogs and protect humans from visceral leishmaniasis transmitted by the sand flies that feed on the infected, vaccinated dogs. In endemic areas such as Brazil where dogs are the principal reservoir for *L. chagasi,* the LPl antigen alone or in combination with other sand fly midgut proteins could be used to immunize household pets and stray dogs. Vaccinated dogs will produce antibodies to LPl, and once a sand fly feeds on blood from the infected and vaccinated dogs, the antibodies will inhibit development of the parasite in the gut of the sand fly. This approach can effectively block Leishmania transmission to human hosts. Such vaccines have the potential to reduce the risk of humans acquiring leishmaniasis without the risks involved in human vaccination.

Applications:

- Transmission blocking vaccine for Leishmania infection.
- Vaccination of dogs as reservoirs for the Leishmania parasite.

Development Status: Early stage.

Market: 500,000 cases of visceral leishmaniasis annually worldwide and 58,000 deaths in Brazil, Bangladesh and Nepal.

Inventors: Ryan C. Jochim and Jesus G. Valenzuela (NIAID).

Related Publication: Jochim RC, Teixeira CR, Laughinghouse A, Mu J, Oliveira F, Gomes RB, Elnaiem DE, Valenzuela JG. The midgut transcriptome of Lutzomyia longipalpis: comparative analysis of cDNA libraries from sugar-fed, blood-fed, post-digested and Leishmania infantum chagasi-infected sand flies. BMC Genomics. 2008 Jan 14;9(1):15. [PubMed: 18194529]

Patent Status: U.S. Provisional Application No. 61/265.250 filed 29 Oct 2009 (HHS Reference No. E–305–2009/0–US–01).

Licensing Status: Available for licensing.

Licensing Contact: Jeffrey A. James; 301–435–5474; *jeffreyja@mail.nih.gov*.

Collaborative Research Opportunity: The NIAID, OTD is seeking statements of capability or interest from parties interested in collaborative research to further develop, evaluate, or commercialize "*A New Transmission Blocking Vaccine for Leishmania Infection*". Please contact Dana Hsu at 301–496–2400 for more information.

A Composition for Cyropreservation and Storage of Human Cellular Products

Description of Invention: This technology is directed to an enhanced composition for the freezing and storage of human cellular products for future use. The inventors have discovered optimal ratios of an extracellular cryoprotectant (low molecular weight pentastarch), an intracellular cryoprotectant (dimethyl sulfoxide, DMSO), and human serum albumin in a plasmalyte A solution. In comparison to currently available products, utilization of this composition results in a cryopreserved product with higher cell yield, longer period of viability and decreased incidence of dimethyl sulfoxide-related adverse effects.

Applications and Advantages:

- Cryopreservation and storage of human and other mammalian cellular products.
- Higher cell yield.
- Extended post-thaw viability.
- Decreased incidence of DMSO-related adverse effects.

Development Status: Early stage.

Market: This invention may be of interest to cell processing and storage companies, hospitals, and research institutions.

Inventors: Joseph F. Gallelli (CC) *et al.*

Patent Status: U.S. Provisional Application No. 61/256,075 filed 29 Oct 2009 (HHS Reference No. E–285–2009/0–US–01).

Licensing Status: Available for licensing.

Licensing Contact: Fatima Sayyid, M.H.P.M.; 301–435–4521; *Fatima.Sayyid@nih.hhs.gov.*

Polarization Adapter for Colposcope

Description of Invention: The invention offered for licensing is directed to a polarization adaptor for colposcopes. The colposcope is a medical diagnostic device that examines an illuminated magnified view of a patient's cervical, vaginal, and vulva tissues during a colposcopy procedure. Specifically, the invention provides for a specialized polarized camera (polarization adaptor) for integration into commercially available colposcopes. The addition of polarization to currently available colposcope results in an enhanced image video output that allows the user to view hidden subsurface tissue structures and textures, thereby allowing for better diagnosis of pathological conditions.

The device which can readily be adapted to commercial colposcope enables the separation of specularly

reflected light from diffusely backscattered light, coming from deeper tissue layers. In combination with suggested data processing algorithm, based on correlation analysis, this allows one to enhance imaging of the hidden subsurface tissue structure (texture).

Applications:

• The polarization adaptor of the invention can enhance the quality of imaging and diagnostics of conventional colposcope and thus improve early detection of pathologies, especially the status of the collagen network beneath the surface of the cervix.

• Screening and diagnostics of cervical abnormalities which can lead to cancer or pre-term delivery.

Advantages:

• Improved characterization of cervical tissue for better diagnosis of abnormalities in cervical, vaginal, and vulva tissues. Minimally invasive measurement and analysis of diffusely backscattered light using specific image processing procedures as provided in the invention, may contribute useful information about internal structures of biological tissues in more detail as compared with existing methods.

• The device can improve early detection of cervical cancer and thus save lives. Recent large-scale National Cancer Institute-sponsored clinical trial demonstrated that colposcopy failed to detect 33% of high-grade precancerous lesions in women referred with questionable Pap results. An improvement in detection capabilities is thus very much needed (*http://biomedreports.com/articles/most-popular/12449-non-invasive-device-for-cervical-cancer*).

• Enhanced diagnostics may result in the reduction of repeat examinations usually used for a definitive diagnostics for cervical cancer. Thus it may have favorable impact on healthcare costs.

• Can be readily adapted to any conventional colposcope.

Development Status:

• A working prototype was built.

• Need to gather clinical data and demonstrate clinical utility.

Market:

• Colposcopy is now routinely used for diagnostics of cervical cancer and other tissue abnormalities in female organs.

• In the U.S. alone, over $6 billion is spent annually on the screening, diagnosis and treatment of women with cervical cancer. Diagnosing cervical cancer is often a long and uncertain process requiring repeat visits to the Doctor's office. Approximately three (3) million colposcopy procedures are performed annually, with many repeat exams aimed at a definitive diagnosis. The U.S. colposcopy market alone is approximately $1 billion annually (*http://biomedreports.com/articles/most-popular/12449-non-invasive-device-for-cervical-cancer*).

• The repeat examinations typically required to arrive at a definitive determination are both stressful and expensive. For women with precancerous lesions, the long diagnostic cycle can allow the disease to progress and develop into invasive, life-threatening cancers. By providing a more definitive test, the device offered in this invention will allow clinicians to more effectively manage and treat millions of women who are at risk of cervical cancer.

In light of the above it is evident that a device that can be adapted to conventional instruments and provide for improved diagnostics will also be commercially rewarding.

Inventors: Amir H. Gandjbakhche *et al.* (NICHD).

Related Publications:

1. Jacques SL, Roman JR, Lee K. Imaging superficial tissues with polarized light. Lasers Surg Med. 2000;26(2):119–129. [PubMed: 10685085].

2. Jacques SL, Ramella-Roman JC, Lee K. Imaging skin pathology with polarized light. J Biomed Opt. 2002 Jul 7;7(3):329–340. [PubMed: 12175282].

3. Ramella-Roman JC, Lee K, Prahl SA, Jacques SL. Design, testing, and clinical studies of a handheld polarized light camera. J Biomed Opt. 2004 Nov–Dec;9(6):1305–1310. [PubMed: 15568952].

4. Sviridov AP, Ulissi Z, Chernomordik V, Hassan M, Boccara AC, Gandjbakhche A, "Analysis of Biological Tissue Textures Using Measurements of Backscattered Polarized Light"; OSA Topical Meeting on Biomedical Optics, c.WD8 (2006).

5. Sviridov AP, Ulissi Z, Chernomordik V, Hassan M, Gandjbakhche A. Visualization of biological texture using correlation coefficient images. J Biomed Opt. 2006 Nov–Dec;11(6):060504. [PubMed: 17212522].

6. Sviridov AP, Chernomordik V, Hassan M, Boccara AC, Russo A, Smith P, Gandjbakhche A. Enhancement of hidden structures of early skin fibrosis using polarization degree patterns and Pearson correlation analysis. J Biomed Opt. 2005 Sep–Oct;10(5):051706. [PubMed: 16292958].

Patent Status: U.S. Provisional Application No. 61/242,652 filed 15 Sep 2009, entitled "Polarization Adapter for Colposcope" (HHS Reference No. E–161–2009–0–US–01).

Licensing Status: Available for licensing.

Licensing Contacts: Uri Reichman, Ph.D., MBA; 301–435–4616; *UR7a@nih.gov*; or Michael Shmilovich, J.D.; 301–435–5019; *shmilovm@mail.nih.gov*.

Collaborative Research Opportunity: The Eunice Shriver National Institute of Child Health and Human Development, Section on Analytical and Functional Biophotonics, is seeking statements of capability or interest from parties interested in collaborative research to further develop, evaluate, or commercialize the polarization camera for cervical tissue characterization. Please contact Joseph Conrad, Ph.D. at 301–435–3107 or *jmconrad@mail.nih.gov* for more information.

Dated: March 16, 2010.

Richard U. Rodriguez,

Director, Division of Technology Development and Transfer, Office of Technology Transfer, National Institutes of Health.

[FR Doc. 2010–6433 Filed 3–23–10; 8:45 am]

BILLING CODE 4140–01–P

DEPARTMENT OF HEALTH AND HUMAN SERVICES

Food and Drug Administration

[Docket No. FDA–2010–N–0001]

Medical Device Epidemiology Network: Developing Partnership Between the Center for Devices and Radiological Health and Academia; Public Workshop

AGENCY: Food and Drug Administration, HHS.

ACTION: Notice of public workshop.

The Food and Drug Administration (FDA) is announcing a public workshop entitled "Medical Device Epidemiology Network (MDEpiNet): Developing Partnership Between the Center for Devices and Radiological Health and Academia." The purpose of the public workshop is to facilitate discussion among FDA and academic researchers with expertise in epidemiology and health services research on issues related to the methodology for studying medical device performance.

Date and Time: The public workshop will be held on April 30, 2010, from 8 a.m. to 5 p.m. Participants are encouraged to arrive early to ensure time for parking and security screening before the meeting. Security screening will begin at 7 a.m., and registration will begin at 7:30 a.m.

Location: The public workshop will be held at the FDA White Oak Campus,

10903 New Hampshire Ave., Silver Spring, MD 20993.

Contact: Kristen Van Dole, Center for Devices and Radiological Health, Food and Drug Administration, 10903 New Hampshire Ave., Silver Spring, MD 20993, 301–796–6334, email: *Kristen.VanDole@fda.hhs.gov*; or Mary Beth Ritchey, Center for Devices and Radiological Health (CDRH), Food and Drug Administration, 10903 New Hampshire Ave., Silver Spring, MD 20993, 307–796–6638, email: *MaryElizabeth.Ritchey@fda.hhs.gov*.

Registration: Email your name, title, organization affiliation, address, and email contact information to Kristen Van Dole (see *Contact*) by April 19, 2010. There is no fee to attend the public workshop, but attendees must register in advance. Registration will be on a first-come, first-served basis and we ask that one person per institution be selected to represent the entity at the workshop. Non-U.S. citizens are subject to additional security screening, and they should register as soon as possible. If you need special accommodations because of a disability, please contact Mary Beth Ritchey (see *Contact*) at least 7 days before the public workshop.

SUPPLEMENTARY INFORMATION:

I. Why Are We Holding This Public Workshop?

The purpose of the public workshop is to facilitate discussion among FDA and the academic epidemiology and health services research community on issues related to the methodology of studies for medical device performance.

We aim to reach out to academic centers that have epidemiologic, statistical, and clinically relevant expertise to establish a network that will work with FDA experts to determine the evidence gaps and questions, datasets and approaches for conducting robust analytic studies and improve our understanding of the performance of medical devices (including comparative effectiveness studies). The centers participating in the network will be expected to take part in other FDA-hosted scientific workshops that address methods for medical device comparative analyses, best practices and best design and analysis methods.

II. Who is the Target Audience for This Public Workshop? Who Should Attend This Public Workshop?

This workshop is open to all interested parties. The target audience is comprised of academic researchers with experience in epidemiology or health services research with an interest in medical device outcome and epidemiologic study methodology.

III. What Are the Topics We Intend to Address at the Public Workshop?

We intend to discuss a large number of issues at the workshop, including, but not limited to:

- Gaps and challenges in medical device outcomes and epidemiologic studies;
- Creation of the Medical Device Epidemiology Network (MdEpiNet) infrastructure; and
- Opportunities for medical device epidemiologic research and partnerships between CDRH and Academia.

IV. Where Can I Find Out More About This Public Workshop?

Background information on the public workshop, registration information, the agenda, information about lodging, and other relevant information will be posted, as it becomes available, on the Internet at *http://www.fda.gov/cdrh/meetings.html*.

Dated: March 18, 2010.

Leslie Kux,

Acting Assistant Commissioner for Policy.

[FR Doc. 2010–6446 Filed 3–23–10; 8:45 am]

BILLING CODE 4160–01–S

DEPARTMENT OF HEALTH AND HUMAN SERVICES

National Institutes of Health

Center For Scientific Review; Notice of Closed Meeting

Pursuant to section 10(d) of the Federal Advisory Committee Act, as amended (5 U.S.C. App.), notice is hereby given of the following meeting.

The meeting will be closed to the public in accordance with the provisions set forth in sections 552b(c)(4) and 552b(c)(6), Title 5 U.S.C., as amended. The grant applications and the discussions could disclose confidential trade secrets or commercial property such as patentable material, and personal information concerning individuals associated with the grant applications, the disclosure of which would constitute a clearly unwarranted invasion of personal privacy.

Name of Committee: Center for Scientific Review Special Emphasis Panel; Member Conflict: AMCB and ADDT.

Date: March 31, 2010.

Time: 11 a.m. to 4 p.m.

Agenda: To review and evaluate grant applications.

Place: National Institutes of Health, 6701 Rockledge Drive, Bethesda, MD 20892 (Telephone Conference Call).

Contact Person: Mary Clare Walker, PhD, Scientific Review Officer, Center for Scientific Review, National Institutes of Health, 6701 Rockledge Drive, Room 5208, MSC 7852, Bethesda, MD 20892, (301) 435–1165, *walkermc@csr.nih.gov.*

This notice is being published less than 15 days prior to the meeting due to the timing limitations imposed by the review and funding cycle.

(Catalogue of Federal Domestic Assistance Program Nos. 93.306, Comparative Medicine; 93.333, Clinical Research, 93.306, 93.333, 93.337, 93.393–93.396, 93.837–93.844, 93.846–93.878, 93.892, 93.893, National Institutes of Health, HHS)

Dated: March 16, 2010.

Jennifer Spaeth,

Director, Office of Federal Advisory Committee Policy.

[FR Doc. 2010–6435 Filed 3–23–10; 8:45 am]

BILLING CODE 4140–01–P

DEPARTMENT OF HEALTH AND HUMAN SERVICES

National Institutes of Health

Center for Scientific Review; Notice of Closed Meetings

Pursuant to section 10(d) of the Federal Advisory Committee Act, as amended (5 U.S.C. App.), notice is hereby given of the following meetings.

The meetings will be closed to the public in accordance with the provisions set forth in sections 552b(c)(4) and 552b(c)(6), Title 5 U.S.C., as amended. The grant applications and the discussions could disclose confidential trade secrets or commercial property such as patentable material, and personal information concerning individuals associated with the grant applications, the disclosure of which would constitute a clearly unwarranted invasion of personal privacy.

Name of Committee: Center for Scientific Review Special Emphasis Panel; Member Conflict: Reproductive Biology.

Date: April 6–7, 2010.

Time: 9 a.m. to 6 p.m.

Agenda: To review and evaluate grant applications.

Place: National Institutes of Health, 6701 Rockledge Drive, Bethesda, MD 20892. (Virtual Meeting)

Contact Person: Robert Garofalo, PhD, Scientific Review Officer, Center for Scientific Review, National Institutes of Health, 6701 Rockledge Drive, Room 6156, MSC 7892, Bethesda, MD 20892, 301–435–1043, *garofalors@csr.nih.gov.*

This notice is being published less than 15 days prior to the meeting due to the timing limitations imposed by the review and funding cycle.

Name of Committee: Center for Scientific Review Special Emphasis Panel; Member Conflict: Brain Disorders.

Date: April 15–16, 2010.

Time: 10 a.m. to 5 p.m.

Agenda: To review and evaluate grant applications.

Place: National Institutes of Health, 6701 Rockledge Drive, Bethesda, MD 20892. (Virtual Meeting)

Contact Person: Samuel C. Edwards, PhD, Chief, Center for Scientific Review, National Institutes of Health, 6701 Rockledge Drive, Room 5210, MSC 7846, Bethesda, MD 20892, (301) 435–1246, *edwardss@csr.nih.gov*.

(Catalogue of Federal Domestic Assistance Program Nos. 93.306, Comparative Medicine; 93.333, Clinical Research, 93.306, 93.333, 93.337, 93.393–93.396, 93.837–93.844, 93.846–93.878, 93.892, 93.893, National Institutes of Health, HHS)

Dated: March 17, 2010.

Jennifer Spaeth,

Director, Office of Federal Advisory Committee Policy.

[FR Doc. 2010–6541 Filed 3–23–10; 8:45 am]

BILLING CODE 4140–01–P

DEPARTMENT OF HEALTH AND HUMAN SERVICES

National Institutes of Health

National Cancer Institute; Notice of Closed Meeting

Pursuant to section 10(d) of the Federal Advisory Committee Act, as amended (5 U.S.C. App.), notice is hereby given of the following meeting.

The meeting will be closed to the public in accordance with the provisions set forth in sections 552b(c)(4) and 552b(c)(6), Title 5 U.S.C., as amended. The grant applications and the discussions could disclose confidential trade secrets or commercial property such as patentable material, and personal information concerning individuals associated with the grant applications, the disclosure of which would constitute a clearly unwarranted invasion of personal privacy.

Name of Committee: National Cancer Institute Special Emphasis Panel; NCI–CNP (U54) Review.

Date: April 7–9, 2010.

Time: 5 p.m. to 5 p.m.

Agenda: To review and evaluate grant applications.

Place: Hilton Washington DC/Rockville Executive Meeting Center, 1750 Rockville Pike, Rockville, MD 20852.

Contact Person: Bratin K. Saha, PhD, Scientific Review Officer, Program Coordination and Referral Branch, Division of Extramural Activities, National Cancer Institute, NIH, 6116 Executive Boulevard, Room 8041, Bethesda, MD 20892, (301) 402–0371, *sahab@mail.nih.gov*.

(Catalogue of Federal Domestic Assistance Program Nos. 93.392, Cancer Construction; 93.393, Cancer Cause and Prevention Research; 93.394, Cancer Detection and Diagnosis Research; 93.395, Cancer Treatment Research; 93.396, Cancer Biology Research; 93.397, Cancer Centers Support; 93.398, Cancer Research Manpower; 93.399, Cancer Control, National Institutes of Health, HHS)

Dated: March 12, 2010.

Jennifer Spaeth,

Director, Office of Federal Advisory Committee Policy.

[FR Doc. 2010–6540 Filed 3–23–10; 8:45 am]

BILLING CODE 4140–01–P

DEPARTMENT OF HEALTH AND HUMAN SERVICES

National Institutes of Health

National Cancer Institute; Notice of Closed Meetings

Pursuant to section 10(d) of the Federal Advisory Committee Act, as amended (5 U.S.C. App.), notice is hereby given of the following meetings.

The meetings will be closed to the public in accordance with the provisions set forth in sections 552b(c)(4) and 552b(c)(6), Title 5 U.S.C., as amended. The grant applications and/or contract proposals and the discussions could disclose confidential trade secrets or commercial property such as patentable material, and personal information concerning individuals associated with the grant applications and/or contract proposals, the disclosure of which would constitute a clearly unwarranted invasion of personal privacy.

Name of Committee: National Cancer Institute Special Emphasis Panel, Nucleic Acid Analysis for the Molecular Characterization of Cancer.

Date: April 6, 2010.

Time: 1 p.m. to 6 p.m.

Agenda: To review and evaluate contract proposals.

Place: National Institutes of Health, 6116 Executive Boulevard, Room 706, Rockville, MD 20852. (Telephone Conference Call)

Contact Person: Jeffrey E. DeClue, PhD, Scientific Review Officer, Special Review and Logistics Branch, Division of Extramural Activities, National Cancer Institute, NIH, 6116 Executive Boulevard, Room 8059, Bethesda, MD 20892–8329. 301–496–7904. *decluej@mail.nih.gov*.

Name of Committee: National Cancer Institute Special Emphasis Panel, Probing DNA Damage and Repair Networks by Synthetic Lethal Screening.

Date: April 8, 2010.

Time: 1 p.m. to 6 p.m.

Agenda: To review and evaluate contract proposals.

Place: National Institutes of Health, 6116 Executive Boulevard, Room 210, Rockville, MD 20852. (Telephone Conference Call)

Contact Person: Jeffrey E. DeClue, PhD, Scientific Review Officer, Special Review and Logistics Branch, Division of Extramural Activities, National Cancer Institute, NIH, 6116 Executive Boulevard, Room 8059, Bethesda, MD 20892–8329. 301–496–7904. *decluej@mail.nih.gov*.

Name of Committee: National Cancer Institute Special Emphasis Panel, Development of Generic Cancer Antibodies for the Treatment of Cancer.

Date: April 14, 2010.

Time: 9 a.m. to 5 p.m.

Agenda: To review and evaluate contract proposals.

Place: National Institutes of Health, 6116 Executive Boulevard, Room 6006, Rockville, MD 20852. (Telephone Conference Call)

Contact Person: Lalita D. Palekar, PhD, Scientific Review Officer, Special Review and Logistics Branch, Division of Extramural Activities, National Cancer Institute, 6116 Executive Boulevard, Room 7141, Bethesda, MD 20892. 301–496–7575. *palekarl@mail.nih.gov*.

Name of Committee: National Cancer Institute Special Emphasis Panel, Cancer Center Support Grant.

Date: May 7, 2010.

Time: 8 a.m. to 12:45 p.m.

Agenda: To review and evaluate grant applications.

Place: Residence Inn Bethesda, 7335 Wisconsin Avenue, Bethesda, MD 20814.

Contact Person: Sonya Roberson, PhD, Scientific Review Officer, Resources and Training Review Branch, Division of Extramural Activities, National Cancer Institute, NIH, 6116 Executive Blvd., Room 8109, Bethesda, MD 20892–8328. 301–594–1182. *robersos@mail.nih.gov*.

(Catalogue of Federal Domestic Assistance Program Nos. 93.392, Cancer Construction; 93.393, Cancer Cause and Prevention Research; 93.394, Cancer Detection and Diagnosis Research; 93.395, Cancer Treatment Research; 93.396, Cancer Biology Research; 93.397, Cancer Centers Support; 93.398, Cancer Research Manpower; 93.399, Cancer Control, National Institutes of Health, HHS)

Dated: March 12, 2010.

Jennifer Spaeth,

Director, Office of Federal Advisory Committee Policy.

[FR Doc. 2010–6538 Filed 3–23–10; 8:45 am]

BILLING CODE 4140–01–P

DEPARTMENT OF HEALTH AND HUMAN SERVICES

National Institutes of Health

National Cancer Institute; Notice of Closed Meeting

Pursuant to section 10(d) of the Federal Advisory Committee Act, as amended (5 U.S.C. App.), notice is hereby given of the following meeting.

The meeting will be closed to the public in accordance with the provisions set forth in sections 552b(c)(4) and 552b(c)(6), Title 5 U.S.C., as amended. The grant applications and the discussions could disclose confidential trade secrets or commercial

property such as patentable material, and personal information concerning individuals associated with the grant applications, the disclosure of which would constitute a clearly unwarranted invasion of personal privacy.

Name of Committee: National Cancer Institute Initial Review Group; Subcommittee A—Cancer Centers.
Date: May 6, 2010.
Time: 8 a.m. to 5:15 p.m.
Agenda: To review and evaluate grant applications.
Place: Residence Inn Bethesda, 7335 Wisconsin Avenue, Bethesda, MD 20814.
Contact Person: Gail J Bryant, MD, Scientific Review Officer, Resources and Training Review Branch, Division of Extramural Activities, National Cancer Institute, 6116 Executive Blvd., Room 8107, MSC 8328, Bethesda, MD 20892–8328, (301) 402–0801, *gb30t@nih.gov*.

(Catalogue of Federal Domestic Assistance Program Nos. 93.392, Cancer Construction; 93.393, Cancer Cause and Prevention Research; 93.394, Cancer Detection and Diagnosis Research; 93.395, Cancer Treatment Research; 93.396, Cancer Biology Research; 93.397, Cancer Centers Support; 93.398, Cancer Research Manpower; 93.399, Cancer Control, National Institutes of Health, HHS)

Dated: March 12, 2010.

Jennifer Spaeth,

Director, Office of Federal Advisory Committee Policy.

[FR Doc. 2010–6537 Filed 3–23–10; 8:45 am]

BILLING CODE 4140–01–P

DEPARTMENT OF HEALTH AND HUMAN SERVICES

National Institutes of Health

National Cancer Institute; Notice of Closed Meeting

Pursuant to section 10(d) of the Federal Advisory Committee Act, as amended (5 U.S.C. App.), notice is hereby given of the following meeting.

The meeting will be closed to the public in accordance with the provisions set forth in sections 552b(c)(4) and 552b(c)(6), Title 5 U.S.C., as amended. The grant applications and the discussions could disclose confidential trade secrets or commercial property such as patentable material, and personal information concerning individuals associated with the grant applications, the disclosure of which would constitute a clearly unwarranted invasion of personal privacy.

Name of Committee: National Cancer Institute Initial Review Group, Subcommittee J—Population and Patient-Oriented Training.
Date: June 29, 2010.
Time: 7:45 a.m. to 6 p.m.
Agenda: To review and evaluate grant applications.
Place: Westin Alexandria, 400 Courthouse Square, Alexandria, VA 22314.
Contact Person: Ilda M. Mckenna, PhD, Scientific Review Officer, Research Training Review Branch, Division of Extramural Activities, National Cancer Institute, 6116 Executive Boulevard, Room 8111, Bethesda, MD 20892. 301–496–7481. *mckennai@mail.nih.gov*.

(Catalogue of Federal Domestic Assistance Program Nos. 93.392, Cancer Construction; 93.393, Cancer Cause and Prevention Research; 93.394, Cancer Detection and Diagnosis Research; 93.395, Cancer Treatment Research; 93.396, Cancer Biology Research; 93.397, Cancer Centers Support; 93.398, Cancer Research Manpower; 93.399, Cancer Control, National Institutes of Health, HHS)

Dated: March 12, 2010.

Jennifer Spaeth,

Director, Office of Federal Advisory Committee Policy.

[FR Doc. 2010–6535 Filed 3–23–10; 8:45 am]

BILLING CODE 4140–01–P

DEPARTMENT OF HEALTH AND HUMAN SERVICES

National Institutes of Health

National Institute of Arthritis and Musculoskeletal and Skin Diseases; Notice of Closed Meetings

Pursuant to section 10(d) of the Federal Advisory Committee Act, as amended (5 U.S.C. App.), notice is hereby given of the following meetings.

The meetings will be closed to the public in accordance with the provisions set forth in sections 552b(c)(4) and 552b(c)(6), Title 5 U.S.C., as amended. The grant applications and the discussions could disclose confidential trade secrets or commercial property such as patentable material, and personal information concerning individuals associated with the grant applications, the disclosure of which would constitute a clearly unwarranted invasion of personal privacy.

Name of Committee: National Institute of Arthritis and Musculoskeletal and Skin Diseases Special Emphasis Panel; Small Business Research Funding Opportunities.
Date: April 7, 2010.
Time: 8 a.m. to 5 p.m.
Agenda: To review and evaluate grant applications.
Place: Marriott Courtyard Gaithersburg Washingtonian Ctr, 204 Boardwalk Place, Gaithersburg, MD 20878.
Contact Person: Charles H. Washabaugh, Scientific Review Officer, Scientific Review Branch, National Institute of Arthritis, Musculoskeletal and Skin Diseases, 6701 Democracy Blvd, Suite 800, Bethesda, MD 20892, 301–594–4952, *washabac@mail.nih.gov*.

Name of Committee: National Institute of Arthritis and Musculoskeletal and Skin Diseases Special Emphasis Panel; Loan Repayment Program Review.
Date: April 30, 2010.
Time: 8 a.m. to 5 p.m.
Agenda: To review and evaluate grant applications.
Place: National Institutes of Health, One Democracy Plaza, 6701 Democracy Boulevard, Suite 800, Bethesda, MD 20892. (Virtual Meeting)
Contact Person: Kan Ma, PhD, Scientific Review Officer, Scientific Review Branch, National Institute of Arthritis, Musculoskeletal and Skin Diseases, 6701 Democracy Blvd, Suite 800, Bethesda, MD 20892, 301–451–4838, *mak2@mail.nih.gov*.

(Catalogue of Federal Domestic Assistance Program Nos. 93.846, Arthritis, Musculoskeletal and Skin Diseases Research, National Institutes of Health, HHS)

Dated: March 18, 2010.

Jennifer Spaeth,

Director, Office of Federal Advisory Committee Policy.

[FR Doc. 2010–6534 Filed 3–23–10; 8:45 am]

BILLING CODE 4140–01–P

DEPARTMENT OF HEALTH AND HUMAN SERVICES

National Institutes of Health

National Library of Medicine; Notice of Meeting

Pursuant to section 10(d) of the Federal Advisory Committee Act, as amended (5 U.S.C. App.), notice is hereby given of the following meeting.

The meeting will be open to the public as indicated below, with attendance limited to space available. Individuals who plan to attend and need special assistance, such as sign language interpretation or other reasonable accommodations, should notify the Contact Person listed below in advance of the meeting.

The portions of the meeting devoted to the review and evaluation of journals for potential indexing by the National Library of Medicine will be closed to the public in accordance with the provisions set forth in section 552b(c)(9)(B), Title 5 U.S.C., as amended. Premature disclosure of the titles of the journals as potential titles to be indexed by the National Library of Medicine, the discussions, and the presence of individuals associated with these publications could significantly frustrate the review and evaluation of individual journals.

Name of Committee: Literature Selection Technical Review Committee.
Date: June 24–25, 2010.
Open: June 24, 2010, 9 a.m. to 11 a.m.

Agenda: Administrative reports and program discussion.

Place: National Library of Medicine, Building 38, Board Room, 2nd Floor, 8600 Rockville Pike, Bethesda, MD 20894.

Closed: June 24, 2010, 11 a.m. to 5 p.m.

Agenda: To review and evaluate journals as potential titles to be indexed by the National Library of Medicine.

Place: National Library of Medicine, Building 38, Board Room, 2nd Floor, 8600 Rockville Pike, Bethesda, MD 20894.

Closed: June 25, 2010, 8:30 a.m. to 2 p.m.

Agenda: To review and evaluate journals as potential titles to be indexed by the National Library of Medicine.

Place: National Library of Medicine, Building 38, Board Room, 2nd Floor, 8600 Rockville Pike, Bethesda, MD 20894.

Contact Person: Sheldon Kotzin, MLS, Associate Director, Division of Library Operations, National Library of Medicine, 8600 Rockville Pike, Bldg 38/Room 2W06, Bethesda, MD 20894, 301–496–6921, *Sheldon_Kotzin@nlm.nih.gov.*

Any interested person may file written comments with the Committee by forwarding the statement to the Contact Person listed on this Notice. The statement should include the name, address, telephone number and, when applicable, the business or professional affiliation of the interested person.

In the interest of security, NIH has instituted stringent procedures for entrance into the building by non-government employees. Persons without a government ID. will need to show a photo ID. and sign in at the security desk upon entering the building.

(Catalogue of Federal Domestic Assistance Program No. 93.879, Medical Library Assistance, National Institutes of Health, HHS)

Dated: March 17, 2010.

Jennifer Spaeth,

Director, Office of Federal Advisory Committee Policy.

[FR Doc. 2010–6389 Filed 3–23–10; 8:45 am]

BILLING CODE 4140–01–M

DEPARTMENT OF HEALTH AND HUMAN SERVICES

National Institutes of Health

National Institute on Aging; Notice of Closed Meetings

Pursuant to section 10(d) of the Federal Advisory Committee Act, as amended (5 U.S.C. App.), notice is hereby given of the following meetings.

The meetings will be closed to the public in accordance with the provisions set forth in sections 552b(c)(4) and 552b(c)(6), Title 5 U.S.C., as amended. The grant applications and the discussions could disclose confidential trade secrets or commercial property such as patentable material, and personal information concerning individuals associated with the grant applications, the disclosure of which would constitute a clearly unwarranted invasion of personal privacy.

Name of Committee: National Institute on Aging Special Emphasis Panel; Neuroendocrine and Reproductive Aging.

Date: April 26, 2010.

Time: 1 p.m. to 4:30 p.m.

Agenda: To review and evaluate grant applications.

Place: National Institute on Aging, Gateway Building, 7201 Wisconsin Avenue, Suite 2C212, Bethesda, MD 20892. (Telephone Conference Call)

Contact Person: Rebecca J. Ferrell, PhD, Scientific Review Officer, National Institute on Aging, Gateway Building Rm. 2C212, 7201 Wisconsin Avenue, Bethesda, MD 20892, 301–402–7703, *ferrellrj@mail.nih.gov.*

Name of Committee: National Institute on Aging Special Emphasis Panel; Molecular Cause of Maturing Deterioration.

Date: May 6, 2010.

Time: 2 p.m. to 5 p.m.

Agenda: To review and evaluate grant applications.

Place: National Institute on Aging, Gateway Building, 7201 Wisconsin Avenue, Suite 2C212, Bethesda, MD 20892 (Telephone Conference Call).

Contact Person: Bita Nakhai, PhD, Scientific Review Officer, Scientific Review Branch, National Institute on Aging, Gateway Bldg., 2C212, 7201 Wisconsin Avenue, Bethesda, MD 20814, 301–402–7701, *nakhaib@nia.nih.gov*.

Name of Committee: National Institute on Aging Special Emphasis Panel; Biomarkers To Predict AD.

Date: May 11, 2010.

Time: 1 p.m. to 4 p.m.

Agenda: To review and evaluate grant applications.

Place: National Institute on Aging, Gateway Building, 7201 Wisconsin Avenue, Suite 2C212, Bethesda, MD 20892. (Telephone Conference Call)

Contact Person: Elaine Lewis, PhD, Scientific Review Officer, Scientific Review Branch, National Institute on Aging, Gateway Building, Suite 2C212, MSC–9205, 7201 Wisconsin Avenue, Bethesda, MD 20892, 301–402–7707, *elainelewis@nia.nih.gov*.

Name of Committee: National Institute on Aging Special Emphasis Panel; Calorie Restriction, IGF–1 and Stress Resistance.

Date: May 17, 2010.

Time: 1 p.m. to 4 p.m.

Agenda: To review and evaluate grant applications.

Place: National Institute on Aging, Gateway Building, 7201 Wisconsin Avenue, Suite 2C212, Bethesda, MD 20892 (Telephone Conference Call).

Contact Person: Elaine Lewis, PhD, Scientific Review Officer, Scientific Review Branch, National Institute on Aging, Gateway Building, Suite 2C212, MSC–9205, 7201 Wisconsin Avenue, Bethesda, MD 20892, 301–402–7707, *elainelewis@nia.nih.gov*.

Name of Committee: National Institute on Aging Special Emphasis Panel; Mitochondrial Antioxidants and Aging.

Date: May 28, 2010.

Time: 11:30 a.m. to 4 p.m.

Agenda: To review and evaluate grant applications.

Place: National Institute on Aging, Gateway Building, 7201 Wisconsin Avenue, Suite 2C212, Bethesda, MD 20892. (Telephone Conference Call)

Contact Person: Alexander Parsadanian, PhD, Scientific Review Officer, National Institute on Aging, Gateway Building 2C212, 7201 Wisconsin Avenue, Bethesda, MD 20892, 301–496–9666, *parsadaniana@nia.nih.gov*.

Name of Committee: National Institute on Aging Special Emphasis Panel; Principle of Stem Cell Maturation.

Date: June 1, 2010.

Time: 12 p.m. to 3 p.m.

Agenda: To review and evaluate grant applications.

Place: National Institute on Aging, Gateway Building, 7201 Wisconsin Avenue, Suite 2C212, Bethesda, MD 20892. (Telephone Conference Call)

Contact Person: Bita Nakhai, PhD, Scientific Review Officer, Scientific Review Branch, National Institute on Aging, Gateway Bldg., 2C212, 7201 Wisconsin Avenue, Bethesda, MD 20814, 301–402–7701, *nakhaib@nia.nih.gov*.

(Catalogue of Federal Domestic Assistance Program Nos. 93.866, Aging Research, National Institutes of Health, HHS)

Dated: March 17, 2010.

Jennifer Spaeth,

Director, Office of Federal Advisory Committee Policy.

[FR Doc. 2010–6384 Filed 3–23–10; 8:45 am]

BILLING CODE 4140–01–P

DEPARTMENT OF HEALTH AND HUMAN SERVICES

National Institutes of Health

Center for Scientific Review; Amended Notice of Meeting

Notice is hereby given of a change in the meeting of the Center for Scientific Review Special Emphasis Panel, March 31, 2010, 12 p.m. to March 31, 2010, 2 p.m., National Institutes of Health, 6701 Rockledge Drive, Bethesda, MD 20892, which was published in the **Federal Register** on March 5, 2010, 75 FR 10291–10292.

The meeting will be held April 6, 2010, from 9 a.m. to 11 a.m.. The meeting location remains the same. The meeting title has been changed to "Member Conflict: Health and Behavior". The meeting is closed to the public.

Dated: March 17, 2010.

Jennifer Spaeth,

Director, Office of Federal Advisory Committee Policy.

[FR Doc. 2010–6383 Filed 3–23–10; 8:45 am]

BILLING CODE 4140–01–P

DEPARTMENT OF HEALTH AND HUMAN SERVICES

Health Resources and Services Administration

Advisory Council on Blood Stem Cell Transplantation; Notice of Meeting

In accordance with section 10(a)(2) of the Federal Advisory Committee Act (Pub. L. 92–463), notice is hereby given of the following meeting:

Name: Advisory Council on Blood Stem Cell Transplantation.

Date and Times: May 5, 2010, 8:30 a.m. to 4:30 p.m.

Place: Bethesda North Marriott Hotel and Conference Center, 5701 Marinelli Road, Bethesda, Maryland 20852.

Status: The meeting will be open to the public.

Purpose: Pursuant to Public Law 109–129, 42 U.S.C. 274k (section 379 of the Public Health Service Act, as amended) the ACBSCT advises the Secretary of HHS and the Administrator, HRSA, on matters related to the activities of the C.W. Bill Young Cell Transplantation Program (Program) and the National Cord Blood Inventory (NCBI) Program. ACBSCT is composed of up to 25 members, including the Chair, serving as Special Government Employees. The current membership includes representatives of marrow donor centers and marrow transplant centers; representatives of cord blood banks and participating birthing hospitals; recipients of a bone marrow transplant; recipients of a cord blood transplant; persons who require such transplants; family members of such a recipient or family members of a patient who has requested the assistance of the Program in searching for an unrelated donor of bone marrow or cord blood; persons with expertise in bone marrow and cord blood transplantation; persons with expertise in typing, matching, and transplant outcome data analysis; persons with expertise in the social sciences; basic scientists with expertise in the biology of adult stem cells; ethicists; hematology and transfusion medicine researchers with expertise in adult blood stem cells; persons with expertise in cord blood processing; and members of the general public.

Agenda

The Council will hear reports from three ACBSCT Work Groups: Access to Transplantation, Cord Blood Collections, and Scientific Factors Necessary To Define a Cord Blood Unit as High Quality. The Council also will hear presentations and discussions on the following topics: Performance measures and targets for programs, FDA final guidance for cord blood licensure, models predicting the impact of growth of the cord blood inventory and the adult donor registry, realizing the full potential of cord blood, financial incentives for adult donors, and the capacity of the national system to handle a larger number of transplants. Agenda items are subject to change as priorities indicate.

After the presentations and Council discussions, members of the public will have an opportunity to provide comments. Because of the Council's full agenda and the timeframe in which to cover the agenda topics, public comment will be limited. All public comments will be included in the record of the ACBSCT meeting. Meeting summary notes will be made available on the HRSA's Program Web site at *http://bloodcell.transplant.hrsa.gov/ABOUT/Advisory_Council/index.html.*

The draft meeting agenda and a registration form are available on the HRSA's Program Web site at *http://bloodcell.transplant.hrsa.gov/ABOUT/Advisory_Council/index.html.*

Registration can also be completed electronically at *http://www.ACBSCT.com* or submitted by facsimile to Lux Consulting Group, Inc., the logistical support contractor for the meeting, at fax number (301) 585–7741, ATTN: Tristan Alexander. Individuals without access to the Internet who wish to register may call Tristan Alexander at (301) 585–1261.

For Further Information Contact: Remy Aronoff, Executive Secretary, Healthcare Systems Bureau, Health Resources and Services Administration, 5600 Fishers Lane, Room 12–105, Rockville, Maryland 20857; telephone (301) 443–3264.

Dated: March 16, 2010.

Sahira Rafiullah,

Director, Division of Policy and Information Coordination.

[FR Doc. 2010–6438 Filed 3–23–10; 8:45 am]

BILLING CODE 4165–15–P

DEPARTMENT OF HEALTH AND HUMAN SERVICES

National Institutes of Health

National Institute of Biomedical Imaging and Bioengineering; Notice of Meeting

Pursuant to section 10(d) of the Federal Advisory Committee Act, as amended (5 U.S.C. App.), notice is hereby given of a meeting of the National Advisory Council for Biomedical Imaging and Bioengineering.

The meeting will be open to the public as indicated below, with attendance limited to space available. Individuals who plan to attend and need special assistance, such as sign language interpretation or other reasonable accommodations, should notify the Contact Person listed below in advance of the meeting.

The meeting will be closed to the public in accordance with the provisions set forth in sections 552b(c)(4) and 552b(c)(6), Title 5 U.S.C., as amended. The grant applications and/or contract proposals and the discussions could disclose confidential trade secrets or commercial property such as patentable material, and personal information concerning individuals associated with the grant applications and/or contract proposals, the disclosure of which would constitute a clearly unwarranted invasion of personal privacy.

Name of Committee: National Advisory Council for Biomedical Imaging and Bioengineering; NACBIB, May, 2010.

Date: May 21, 2010.

Open: 8:30 a.m. to 12:15 p.m.

Agenda: Report from the Institute Director, other Institute Staff and presentations of working group reports.

Place: Bethesda Marriott Suites, 6711 Democracy Boulevard, Independence Room (2nd Level), Bethesda, MD 20817.

Closed: 1:30 p.m. to 3 p.m.

Agenda: To review and evaluate grant applications and/or proposals.

Place: Bethesda Marriott Suites, 6711 Democracy Boulevard, Independence Room (2nd Level), Bethesda, MD 20817.

Contact Person: Anthony Demsey, PhD, Director, National Institute of Biomedical Imaging, and Bioengineering, 6701 Democracy Boulevard, Room 241, Bethesda, MD 20892.

Any interested person may file written comments with the committee by forwarding the statement to the Contact Person listed on this notice. The statement should include the name, address, telephone number and when applicable, the business or professional affiliation of the interested person.

Information is also available on the Institute's/Center's home page: *http://www.nibib1.nih.gov/about/NACBIB/NACBIB.htm*, where an agenda and any additional information for the meeting will be posted when available.

Dated: March 17, 2010.

Jennifer Spaeth,

Director, Office of Federal Advisory Committee Policy.

[FR Doc. 2010–6436 Filed 3–23–10; 8:45 am]

BILLING CODE 4140–01–P

DEPARTMENT OF HEALTH AND HUMAN SERVICES

National Institutes of Health

National Institute on Drug Abuse; Notice of Closed Meeting

Pursuant to section 10(d) of the Federal Advisory Committee Act, as amended (5 U.S.C. App), notice is hereby given of the following meeting.

The meeting will be closed to the public in accordance with the provisions set forth in sections 552b(c)(4) and 552b(c)(6), Title 5 U.S.C., as amended. The contract proposals and the discussions could disclose confidential trade secrets or commercial property such as patentable material, and personal information concerning individuals associated with the contract

proposals, the disclosure of which would constitute a clearly unwarranted invasion of personal privacy.

Name of Committee: National Institute on Drug Abuse Special Emphasis Panel; Substance Abuse Treatment Referral System (5543).

Date: May 11, 2010.

Time: 1:30 p.m. to 3 p.m.

Agenda: To review and evaluate contract proposals.

Place: National Institutes of Health, 6101 Executive Boulevard, Rockville, MD 20852, (Telephone Conference Call).

Contact Person: Lyle Furr, Contract Review Specialist, Office of Extramural Affairs, National Institute on Drug Abuse, NIH, DHHS, Room 220, MSC 8401, 6101 Executive Boulevard, Bethesda, MD 20892–8401, (301) 435–1439, *lf33c.nih.gov.*

(Catalogue of Federal Domestic Assistance Program Nos. 93.279, Drug Abuse and Addiction Research Programs, National Institutes of Health, HHS)

Dated: March 16, 2010.

Jennifer Spaeth,

Director, Office of Federal Advisory Committee Policy.

[FR Doc. 2010–6266 Filed 3–23–10; 8:45 am]

BILLING CODE 4140–01–M

DEPARTMENT OF HEALTH AND HUMAN SERVICES

National Institutes of Health

National Institute on Drug Abuse; Notice of Meeting

Pursuant to section 10(d) of the Federal Advisory Committee Act, as amended (5 U.S.C. App.), notice is hereby given of a meeting of the National Advisory Council on Drug Abuse.

The meeting will be open to the public as indicated below, with attendance limited to space available. Individuals who plan to attend and need special assistance, such as sign language interpretation or other reasonable accommodations, should notify the Contact Person listed below in advance of the meeting.

The meeting will be closed to the public in accordance with the provisions set forth in sections 552b(c)(4) and 552b(c)(6), Title 5 U.S.C., as amended. The grant applications and the discussions could disclose confidential trade secrets or commercial property such as patentable material, and personal information concerning individuals associated with the grant applications, the disclosure of which would constitute a clearly unwarranted invasion of personal privacy.

Name of Committee: National Advisory Council on Drug Abuse.

Date: May 5, 2010.

Closed: 8:30 a.m. to 10 a.m.

Agenda: To review and evaluate grant applications.

Place: National Institutes of Health, Neuroscience Center, 6001 Executive Boulevard, Rockville, MD 20852.

Open: 11 a.m. to 2 p.m.

Agenda: This portion of the meeting will be open to the public for announcements and reports of administrative, legislative and program developments in the drug abuse field.

Place: National Institutes of Health, Neuroscience Center, 6001 Executive Boulevard, Rockville, MD 20852.

Contact Person: Teresa Levitin, PhD, Director, Office of Extramural Affairs, National Institute on Drug Abuse, NIH, DHHS, Room 220, MSC 8401, 6101 Executive Boulevard, Bethesda, MD 20892–8401, (301) 443–2755.

Any member of the public interested in presenting oral comments to the committee may notify the Contact Person listed on this notice at least 10 days in advance of the meeting. Interested individuals and representatives of organizations may submit a letter of intent, a brief description of the organization represented, and a short description of the oral presentation. Only one representative of an organization may be allowed to present oral comments and if accepted by the committee, presentations may be limited to five minutes. Both printed and electronic copies are requested for the record. In addition, any interested person may file written comments with the committee by forwarding their statement to the Contact Person listed on this notice. The statement should include the name, address, telephone number and when applicable, the business or professional affiliation of the interested person.

Information is also available on the Institutes/Center's home page: *http://www.drugabuse.gov/NACDA/NACDAHome.html,* where an agenda and any additional information for the meeting will be posted when available.

(Catalogue of Federal Domestic Assistance Program Nos. 93.279, Drug Abuse and Addiction Research Programs, National Institutes of Health, HHS)

Dated: March 16, 2010.

Jennifer Spaeth,

Director, Office of Federal Advisory Committee Policy.

[FR Doc. 2010–6264 Filed 3–23–10; 8:45 am]

BILLING CODE 4140–01–M

DEPARTMENT OF HEALTH AND HUMAN SERVICES

Centers for Medicare & Medicaid Services

Statement of Organization, Functions, and Delegations of Authority

Part F of the Statement of Organization, Functions, and Delegations of Authority for the Department of Health and Human Services, Centers for Medicare & Medicaid Services (CMS), (**Federal Register**, Vol. 72, No. 248, pp. 73847–73850, dated Friday, December 28, 2007) is amended to reflect changes to the current structure of CMS.

In an effort to improve the value and service that CMS provides to the Nation, the CMS has modified its structure to align similar functions under common executive leadership and allow CMS to establish a Center for Program Integrity and to strengthen its focus on beneficiary services and strategic planning.

The structure includes the following, which all report to the Administrator, CMS: (1) Center for Medicare, (2) Center for Medicaid, CHIP and Survey & Certification, (3) Center for Strategic Planning, (4) Center for Program Integrity, and (5) Office of External Affairs and Beneficiary Services. In addition, the current role of the Chief Operating Officer (COO) has been formalized and remains responsible for operations, information systems, contracts, finance, E-health standards and services, and the Consortia. The COO continues to report to the Administrator, CMS. The following organizations remain substantively unchanged and continue to report to the Administrator, CMS: Office of Equal Opportunity and Civil Rights, Office of Legislation, Office of the Actuary, Office of Clinical Standards and Quality, and the Office of Strategic Operations and Regulatory Affairs (will be renamed the Office of Executive Operations and Regulatory Affairs to more accurately reflect the work of the organization). New administrative codes were assigned to all organizations, including the immediate office of the Administrator.

Given the complexity and importance of CMS' programs, this realignment of existing functions positions CMS to consistently excel in serving our beneficiaries and strategically positions CMS for the future. Additionally, this effort ensures common core functions are under common executive leadership and share a consistent vision.

The specific amendments to Part F are described below:

I. Under Part F, CMS, Office of the Administrator, FA.10 Organization is deleted in its entirety and replaced with the following:

FC.10 Organization. CMS is headed by the Administrator, CMS, and includes the following organizational components:

Office of the Administrator (FC)
Office of Equal Opportunity and Civil Rights (FCA)

Office of External Affairs and Beneficiary Services (FCB)
Office of Legislation (FCC)
Office of the Actuary (FCE)
Office of Executive Operations and Regulatory Affairs (FCF)
Office of Clinical Standards and Quality (FCG)
Center for Medicare (FCH)
Center for Medicaid, CHIP and Survey & Certification (FCJ)
Center for Strategic Planning (FCK)
Center for Program Integrity (FCL)
Chief Operating Officer (FCM)

II. Under Part F, CMS, Office of the Administrator, FA.20 Functions is replaced with FC.20 Functions. The functions of the new organizations read as follows:

Office of External Affairs and Beneficiary Services (FCB)

• Serves as CMS' focal point for beneficiary communications and services, provides leadership for CMS in the areas of intergovernmental affairs, and media relations. Advises the Administrator and other CMS components in all activities related to these functions and on matters that affect other units and levels of government.

• Contributes to the formulation of policies, programs, and systems as well as oversees beneficiary services, intergovernmental affairs, media relations, and tribal affairs, including CMS' Ombudsman program, call center operations, web sites, and Medicare contractor communications. Coordinates with the Office of Legislation on the development and advancement of new legislative initiatives and improvements.

• Oversees the analysis and evaluation of customer data for the purpose of improving beneficiary communication tools (including but not limited to brochures, program/media campaigns, handbooks, websites, reports, presentations/briefings) and identifying best practices for the benefit of beneficiaries and other CMS customers. Coordinates this data with other CMS components to resolve customer and beneficiary issues through continuous quality improvement.

• Oversees all CMS interactions and collaboration with key stakeholders relating to beneficiary communications and services, media relations, and intergovernmental affairs (e.g., external advocacy groups, Medicare beneficiary customer service, the media, contractors, Native American and Alaskan Native tribes, HHS, the White House, other CMS components, and other Federal government entities).

• Formulates and implements a customer service plan that serves as a roadmap for the effective treatment and advocacy of customers and the quality of information provided to them.

• Coordinates communications, messaging, media relations, partner relations and Tribal Affairs outreach with the CMS Regional Offices.

• Serves as senior advisor to the Administrator in all activities related to the media. Provides consultation, advice, and training to CMS' senior staff with respect to relations with the news media.

• Serves as liaison between CMS and State and local officials, and individuals representing State and local officials and advocacy groups.

• Serves as coordinator of tribal affairs issues and liaison between CMS and State and local officials representing tribal affairs groups.

Center for Medicare (FCH)

• Serves as CMS' focal point for the formulation, coordination, integration, implementation, and evaluation of national Medicare program policies and operations.

• Identifies and proposes modifications to Medicare programs and policies to reflect changes or trends in the health care industry, program objectives, and the needs of Medicare beneficiaries. Coordinates with the Office of Legislation on the development and advancement of new legislative initiatives and improvements.

• Serves as CMS' lead for management, oversight, budget and performance issues relating to Medicare Advantage and prescription drug plans, Medicare fee-for-service providers and contractors.

• Oversees all CMS interactions and collaboration with key stakeholders relating to Medicare (*e.g.,* plans, providers, other government entities, advocacy groups, Consortia) and communication and dissemination of policies, guidance and materials to same to understand their perspectives and to drive best practices in the health care industry.

• Develops and implements a comprehensive strategic plan, objectives and measures to carry out CMS' Medicare program mission and goals and position the organization to meet future challenges with the Medicare program and its beneficiaries.

• Coordinates with the Center for Program Integrity on the identification of program vulnerabilities and implementation of strategies to eliminate fraud, waste, and abuse.

Center for Medicaid, CHIP and Survey & Certification (FCJ)

• Serves as CMS' focal point for the formulation, coordination, integration, implementation, and evaluation of all national program policies and operations relating to Medicaid, CHIP, Survey & Certification, and the Clinical Laboratory Improvement Act (CLIA).

• In partnership with States, evaluates the success of State agencies in carrying out their responsibilities for effective State program administration and beneficiary protection, and, as necessary, assists States in correcting problems and improving the quality of their operations.

• Identifies and proposes modifications to Medicaid and CHIP program measures, regulations, laws and policies to reflect changes or trends in the health care industry, program objectives, and the needs of Medicaid and CHIP beneficiaries. Collaborates with the Office of Legislation on the development and advancement of new legislative initiatives and improvements.

• Oversees the planning, coordination and implementation of the survey, certification and enforcement programs for all Medicare and Medicaid providers and suppliers, and for laboratories under the auspices of CLIA.

• Serves as CMS' lead for management, oversight, budget and performance issues relating to Medicaid, CHIP and Survey and Certification, and the related interactions with the States.

• Coordinates with the Center for Program Integrity on the identification of program vulnerabilities and implementation of strategies to eliminate fraud, waste, and abuse.

• In conjunction with the Office of External Affairs, oversees all CMS interactions and collaboration relating to Medicaid and CHIP with beneficiaries, States and territories and key stakeholders (*i.e.,* health facilities and other health care providers, other Federal government entities, local governments) and communication and dissemination of policies, guidance and materials to same to understand their perspectives, support their efforts, and to drive best practices for beneficiaries, in States and throughout the health care industry.

• Develops and implements a comprehensive strategic plan, objectives and measures to carry out CMS' Medicaid and CHIP mission and goals and position the organization to meet future challenges with the Medicaid, CHIP and Survey & Certification, and CLIA programs.

Center for Strategic Planning (FCK)

• Serves as CMS' focal point for the planning, formulation and coordination of long-term strategic plans, and future program policy and proposals for CMS.

• Collaborates with the Office of Legislation on the development and advancement of new legislative initiatives and improvements.

• Conducts environmental scanning, identifying, evaluating and reporting emerging trends in health care delivery and financing and their interactions with CMS programs and implications for future policy development and planning.

• Oversees strategic, cross-cutting initiatives in coordination with other CMS components and external stakeholders.

• In collaboration with other CMS components, designs, coordinates, conducts research, demonstrations, analyses and special studies, and evaluates the results for impacts on beneficiaries, providers, plans, health care programs and financing, States and other partners, designing and assessing potential improvements, and developing new measurement tools.

• Oversees the development and dissemination of publications, data analyses, graphics, and briefing materials related to health care issues.

Center for Program Integrity (FCL)

• Serves as CMS' focal point for all national and State-wide Medicare and Medicaid programs and CHIP integrity fraud and abuse issues.

• Promotes the integrity of the Medicare and Medicaid programs and CHIP through provider/contractor audits and policy reviews, identification and monitoring of program vulnerabilities, and providing support and assistance to States. Recommends modifications to programs and operations as necessary and works with CMS Centers and Offices to affect changes as appropriate. Collaborates with the Office of Legislation on the development and advancement of new legislative initiatives and improvements to deter, reduce, and eliminate fraud, waste and abuse.

• Oversees all CMS interactions and collaboration with key stakeholders relating to program integrity (*i.e.,* U.S. Department of Justice, HHS Office of Inspector General, State law enforcement agencies, other Federal entities, CMS components) for the purposes of detecting, deterring, monitoring and combating fraud and abuse, as well as taking action against those that commit or participate in fraudulent or other unlawful activities.

• In collaboration with other CMS Centers and Offices, develops and implements a comprehensive strategic plan, objectives and measures to carry out CMS' Medicare, Medicaid and CHIP program integrity mission and goals, and ensure program vulnerabilities are identified and resolved.

Chief Operating Officer (FCM)

• Overall responsibility for facilitating the coordination, integration and execution of CMS policies and activities across CMS components, including new program initiatives.

• Promotes accountability, communication, coordination, and facilitation of cooperative corporate decision-making among CMS senior leadership on management, operational and programmatic cross-cutting issues.

• Tracks and monitors CMS performance and intervenes, as appropriate, to ensure key milestones/deliverables are successfully achieved. Keeps the Administrator and Principal Deputy Administrator advised of the status of significant national initiatives and programs that affect beneficiaries and/or the health care industry and makes recommendations regarding necessary corrective actions.

• Provides executive leadership to CMS' Consortia operations, including facilitating all required interaction and coordination between Consortia and other CMS components.

• Oversees all planning, implementation and evaluation of administrative and operational activities for CMS, including enterprise-wide information systems and services, acquisition and grants, financial management, electronic health standards, facilities, and human resources.

Delegations of Authority

All delegations and re-delegations of authority made to officials and employees of affected organizational components will continue in them or their successor organization pending further re-delegation, provided they are consistent with this realignment.

(Authority: 44 U.S.C. 3101)

Dated: March 18, 2010.

Kathleen Sebelius,

Secretary.

[FR Doc. 2010–6429 Filed 3–23–10; 8:45 am]

BILLING CODE 4120–01–P

DEPARTMENT OF HEALTH AND HUMAN SERVICES

Centers for Disease Control and Prevention

Statement of Organization, Functions, and Delegations of Authority

Part C (Centers for Disease Control and Prevention) of the Statement of Organization Functions, and Delegations of Authority of the Department of Health and Human Services (45 FR 67772–76, dated October 14, 1980, and corrected at 45 FR 69296, October 20, 1980, as amended most recently at 75 FR 10296, dated March 5, 2010) is amended to reflect the reorganization of the Office of Dispute Resolution and Equal Opportunity Office, Office of the Director, Centers for Disease Control and Prevention.

Section C–B, Organization and Functions, is hereby amended as follows: Delete in its entirety the title and functional statement for the Office of Dispute Resolution and Equal Opportunity Office (CAV) and insert the following:

Office of Diversity Management and Equal Employment Opportunity (CAV). The Office of Diversity Management and Equal Employment Opportunity (ODMEEO) is located in the Office of the Director, Centers for Disease Control and Prevention (CDC). The Director, ODMEEO serves as the principal advisor to the Director, CDC, on all equal employment opportunity matters. The mission of the ODMEEO is to ensure an environment that promotes equal employment opportunity and diversity for all individuals, eradicates discrimination and harassment in all forms, and promotes an inclusive environment and values diversity that empowers employees to participate and support CDC's global health mission. In carrying out its mission the ODMEEO: (1) Develops and recommends for adoption CDC-wide equal employment opportunity policies, goals, and priorities to carry out the directives of the U.S. Office of Personnel Management, U.S. Equal Employment Opportunity Commission, and Department of Health and Human Services (DHHS) equal employment opportunity policies and requirements that are mandated by Title VII, Civil Rights Act of 1964; Age Discrimination in Employment Act (ADEA); Rehabilitation Act of 1973; Civil Service Reform Act; 29 CFR 1614, Federal Sector Equal Employment Opportunity; Executive Order 11478, Equal Employment Opportunity in the Federal Government; (2) provides leadership, direction, and technical guidance to CDC managers and staff for the development of comprehensive programs and plans; (3) coordinates and evaluates agency equal employment opportunity operations and plans, including affirmative action; (4) develops plans, programs, and procedures to assure the prompt receipt, investigation, and resolution of complaints of alleged

discrimination by reason of race, sex, age, religion, national origin, handicap, or by reason of reprisal or retaliation; (5) coordinates the development of comprehensive special emphasis programs to assure full recognition of the needs of women, Hispanics, other minorities and the handicapped in hiring and employment; (6) identifies needs for ODMEEO functions within CDC and assures the development of a training curriculum for all CDC supervisory personnel; (7) prepares or coordinates the preparation of, reports and analyses designed to reflect the status of employment of women and minorities at CDC and maintains liaison with DHHS and other organizations concerned with equal employment opportunity; (8) ensures effective coordination of ODMEEO activities with CDC personnel and training programs, and with CDC national centers manpower planning and support programs in the health professions; (9) develops a system of structured reviews and evaluations of CDC ODMEEO activities to assure effective operations and accountability; (10) assists in assuring the adequate allocation of resources for ODMEEO including the establishment of guidelines for recruiting, selection, and training of agency personnel; (11) develops and directs research and evaluation studies to focus on, and improve the effectiveness of, ODMEEO program activities; (12) provides direction for the agency's alternative dispute resolution activities; (13) provides direct support for ODMEEO program activities in CDC; and (14) develops a system to improve diversity policies, procedures and practices to ensure that all employees are treated with respect and fairness.

Dated: March 11, 2010.

William P. Nichols,

Chief Operating Officer, Centers for Disease Control and Prevention.

[FR Doc. 2010–6340 Filed 3–23–10; 8:45 am]

BILLING CODE 4160–18–M

DEPARTMENT OF HOMELAND SECURITY

U.S. Citizenship and Immigration Services

[OMB Control No. 1615–0112]

Agency Information Collection Activities: Form I–9 CNMI; Revision to an Existing Information Collection; Comment Request

ACTION: 30-Day Notice of Information Collection under Review: Form I–9 CNMI, CNMI Employment Eligibility Verification; OMB Control No. 1615–0112.

The Department of Homeland Security, U.S. Citizenship and Immigration Services (USCIS) has submitted the following information collection request to the Office of Management and Budget (OMB) for review and clearance in accordance with the Paperwork Reduction Act of 1995. The information collection was previously published in the **Federal Register** on December 31, 2009, at 74 FR 69354, allowing for a 60-day public comment period. USCIS did not receive any comments for this information collection.

The purpose of this notice is to allow an additional 30 days for public comments. Comments are encouraged and will be accepted until April 23, 2010. This process is conducted in accordance with 5 CFR 1320.10.

Written comments and/or suggestions regarding the item(s) contained in this notice, especially regarding the estimated public burden and associated response time, should be directed to the Department of Homeland Security (DHS), and to the Office of Management and Budget (OMB) USCIS Desk Officer. Comments may be submitted to: USCIS, Chief, Regulatory Products Division, Clearance Office, 111 Massachusetts Avenue, Washington, DC 20529–2210. Comments may also be submitted to DHS via facsimile to 202–272–8352 or via e-mail at rfs.regs@dhs.gov, and OMB USCIS Desk Officer via facsimile at 202–395–5806 or via e-mail at *oira_submission@omb.eop.gov.*

When submitting comments by e-mail please make sure to add OMB Control Number 1615–0112 in the subject box. Written comments and suggestions from the public and affected agencies should address one or more of the following four points:

(1) Evaluate whether the collection of information is necessary for the proper performance of the functions of the agency, including whether the information will have practical utility;

(2) Evaluate the accuracy of the agency's estimate of the burden of the collection of information, including the validity of the methodology and assumptions used;

(3) Enhance the quality, utility, and clarity of the information to be collected; and

(4) Minimize the burden of the collection of information on those who are to respond, including through the use of appropriate automated, electronic, mechanical, or other technological collection techniques or other forms of information technology, *e.g.,* permitting electronic submission of responses.

Overview of This Information Collection

a. *Type of information collection:* Revision of an existing information collection.

b. *Abstract:* This collection is necessary to document that each new employee (both citizen and noncitizen) hired in the Commonwealth of the Northern Mariana Islands (CNMI), is authorized to work in the CNMI.

c. *Title of Form/Collection:* CNMI Employment Eligibility Verification.

d. *Agency form number, if any, and the applicable component of the Department of Homeland Security sponsoring the collection:* Form I–9 CNMI; U.S. Citizenship and Immigration Services.

e. *Affected public who will be asked or required to respond: Primary:* Individuals and Households.

f. *An estimate of the total number of respondents:* 1,700 respondents at 9 minutes per response, and 3 minutes for recordkeeping.

g. *Total Annual Reporting Burden:* 340 hours.

If you need a copy of the information collection instrument, please visit the Web site at: *http://www.regulations.gov.*

We may also be contacted at: USCIS, Regulatory Products Division, 111 Massachusetts Avenue, NW., Washington, DC 20529–2210; Telephone 202–272–8377.

Dated: March 19, 2010.

Stephen Tarragon,

Deputy Chief, Regulatory Products Division, U.S. Citizenship and Immigration Services, Department of Homeland Security.

[FR Doc. 2010–6465 Filed 3–23–10; 8:45 am]

BILLING CODE 9111–97–P

DEPARTMENT OF HOMELAND SECURITY

Federal Emergency Management Agency

[Internal Agency Docket No. FEMA–1867–DR; Docket ID FEMA–2010–0002]

New Jersey; Amendment No. 2 to Notice of a Major Disaster Declaration

AGENCY: Federal Emergency Management Agency, DHS.

ACTION: Notice.

SUMMARY: This notice amends the notice of a major disaster declaration for the State of New Jersey (FEMA–1867–DR), dated December 22, 2009, and related determinations.

DATES: *Effective Date:* March 10, 2010.

FOR FURTHER INFORMATION CONTACT: Peggy Miller, Recovery Directorate, Federal Emergency Management Agency, 500 C Street, SW., Washington, DC 20472, (202) 646–3886.

SUPPLEMENTARY INFORMATION: The Federal Emergency Management Agency

(FEMA) hereby gives notice that pursuant to the authority vested in the Administrator, under Executive Order 12148, as amended, William L. Vogel, of FEMA is appointed to act as the Federal Coordinating Officer for this disaster.

This action terminates the appointment of Stephen M. DeBlasio Sr. as Federal Coordinating Officer for this disaster.

The following Catalog of Federal Domestic Assistance Numbers (CFDA) are to be used for reporting and drawing funds: 97.030, Community Disaster Loans; 97.031, Cora Brown Fund; 97.032, Crisis Counseling; 97.033, Disaster Legal Services; 97.034, Disaster Unemployment Assistance (DUA); 97.046, Fire Management Assistance Grant; 97.048, Disaster Housing Assistance to Individuals and Households In Presidentially Declared Disaster Areas; 97.049, Presidentially Declared Disaster Assistance—Disaster Housing Operations for Individuals and Households; 97.050, Presidentially Declared Disaster Assistance to Individuals and Households—Other Needs; 97.036, Disaster Grants—Public Assistance (Presidentially Declared Disasters); 97.039, Hazard Mitigation Grant.

W. Craig Fugate,

Administrator, Federal Emergency Management Agency.

[FR Doc. 2010–6416 Filed 3–23–10; 8:45 am]

BILLING CODE 9111–23–P

DEPARTMENT OF HOMELAND SECURITY

Federal Emergency Management Agency

[Internal Agency Docket No. FEMA–1873–DR; Docket ID FEMA–2010–0002]

New Jersey; Amendment No. 1 to Notice of a Major Disaster Declaration

AGENCY: Federal Emergency Management Agency, DHS.

ACTION: Notice.

SUMMARY: This notice amends the notice of a major disaster declaration for the State of New Jersey (FEMA–1873–DR), dated February 5, 2010, and related determinations.

DATES: *Effective Date:* March 10, 2010.

FOR FURTHER INFORMATION CONTACT: Peggy Miller, Recovery Directorate, Federal Emergency Management Agency, 500 C Street, SW., Washington, DC 20472, (202) 646–3886.

SUPPLEMENTARY INFORMATION: The Federal Emergency Management Agency (FEMA) hereby gives notice that pursuant to the authority vested in the Administrator, under Executive Order 12148, as amended, William L. Vogel, of FEMA is appointed to act as the Federal Coordinating Officer for this disaster.

This action terminates the appointment of Stephen M. DeBlasio Sr. as Federal Coordinating Officer for this disaster.

The following Catalog of Federal Domestic Assistance Numbers (CFDA) are to be used for reporting and drawing funds: 97.030, Community Disaster Loans; 97.031, Cora Brown Fund; 97.032, Crisis Counseling; 97.033, Disaster Legal Services; 97.034, Disaster Unemployment Assistance (DUA); 97.046, Fire Management Assistance Grant; 97.048, Disaster Housing Assistance to Individuals and Households in Presidentially Declared Disaster Areas; 97.049, Presidentially Declared Disaster Assistance—Disaster Housing Operations for Individuals and Households; 97.050, Presidentially Declared Disaster Assistance to Individuals and Households—Other Needs; 97.036, Disaster Grants—Public Assistance (Presidentially Declared Disasters); 97.039, Hazard Mitigation Grant.)

W. Craig Fugate,

Administrator, Federal Emergency Management Agency.

[FR Doc. 2010–6419 Filed 3–23–10; 8:45 am]

BILLING CODE 9111–23–P

DEPARTMENT OF THE INTERIOR

National Park Service

30-Day Notice of Intention To Request Clearance of Collection of Information; Opportunity for Public Comment

AGENCY: Department of the Interior; National Park Service.

ACTION: Notice and request for comments.

SUMMARY: Under the provisions of the Paperwork Reduction Act of 1995 (Pub. L. 104–13, 44 U.S.C., Chapter 3507) and 5 CFR Part 1320, Reporting and Record Keeping Requirements, the National Park Service (NPS) invites public comments on an extension of a currently approved information collection (OMB #1024–0026).

The OMB has up to 60 days to approve or disapprove the requested information collection, but may respond after 30 days. Therefore, to ensure maximum consideration, OMB should receive public comments by the date specified in the **DATES** section.

The National Park Service published a 60-day **Federal Register** notice to solicit public comments on this information collection on November 4, 2009, volume 74, pages 57188–57189. The comment period closed on January 4, 2010. No comments were received on this notice.

DATES: Public comments on the proposed Information Collection Request (ICR) must be received by April 23, 2010.

ADDRESSES: You may submit comments directly to the Desk Officer for the Department of the Interior, (OMB #1024–0026) Office of Information and Regulatory Affairs, OMB by fax at 202/395–5806, or by electronic mail at *OIRA_DOCKET@omb.eop.gov.* Please also send a copy of your comments to Ms. Lee Dickinson, Special Park Uses Program Manager, National Park Service, 1849 C Street, NW., (2465), Washington, DC 20240, or electronically to *lee_dickinson@nps.gov.*

FOR FURTHER INFORMATION CONTACT: Lee Dickinson, *phone:* 202–513–7092, *fax:* 202–371–1710, or at the address above. You are entitled to a copy of the entire ICR package free-of-charge.

SUPPLEMENTARY INFORMATION:

OMB Control Number: 1024–0026.

Title: Special Park Use Applications (Portions of 36 CFR 1–7, 13, 20, 34).

Form: 10–930, 10–931, 10–932.

Expiration Date of Approval: March 31, 2010.

Type of Request: Extension of a currently approved information collection.

Affected Public: Individuals; businesses; not-for-profit organizations; and State, local, and tribal governments.

Frequency of Response: On occasion.

Obligation to Respond: Required to obtain or retain a benefit.

Description of Need: The National Park Service's (NPS) legislative mandate is to preserve America's natural wonders unimpaired for future generations, while also making them available for the enjoyment of the visitor (16 U.S.C. 1). Various regulations found at 36 CFR parts 1–7 and 43 CFR part 5 require permits for various activities on park lands. The National Park Service is requesting approval of three forms (Forms 10–930, 10–931, and 10–932) used to apply for special use permits for activities on park lands. Proposed activities may include, but are not limited to, special events, First Amendment activities, commercial filming, grazing, and agricultural use. Park managers use the information to determine if the requested use is consistent with the NPS legal authorities, regulations and policy and will not cause unacceptable impacts to park resources and values. The following chart provides the number of respondents, number of annual responses, average completion time, and total annual burden hours by activity.

Actvity	No. of respondents	No. annual responses	Average completion time per hour	Total annual burden hours
10–930—Special Use Permit Application	15,200	15,200	0.75	11,401
10–931—Commercial Filming/Still Photography, short form	2,000	2,000	0.5	1,000
10–932—Commercial Filming/Still Photography, long form	200	200	0.75	150
Totals	17,400	17,400		12,551

Comments are invited on: (1) The practical utility of the information being gathered; (2) the accuracy of the burden hour estimate; (3) ways to enhance the quality, utility, and clarity of the information being collected; and (4) ways to minimize the burden to respondents, including use of automated information collection techniques or other forms of information technology. Before including your address, phone number, e-mail address, or other personal identifying information in your comment, you should be aware that your entire comment—including your personal identifying information—may be made publicly available at any time. While you can ask us in your comment to withhold your personal identifying information from public review, we cannot guarantee that we will be able to do so. An agency may not conduct or sponsor, and a person is not required to respond to, a collection of information unless it displays a currently valid OMB control number. The OMB control number for this collection of information is 1024–0026.

Dated: March 19, 2010.

Cartina Miller,

NPS Information Collection Clearance Officer.

[FR Doc. 2010–6467 Filed 3–23–10; 8:45 am]

BILLING CODE 4312–53–P

DEPARTMENT OF THE INTERIOR

National Park Service

60-Day Notice of Intention To Request Clearance of Collection of Information—Opportunity for Public Comment

AGENCY: Department of the Interior; National Park Service.

ACTION: Notice and request for comments.

SUMMARY: Under the provisions of the Paperwork Reduction Act of 1995 (Pub. L. 104–13, 44 U.S.C. 3507) and 5 CFR 1320, Reporting and Recordkeeping Requirements, the National Park Service invites public comments on an extension of a currently approved collection of information, Office of Management and Budget (OMB) #1024–0031. An agency may not conduct or sponsor, and a person is not required to respond to, a collection of information unless it displays a currently valid OMB control number.

DATES: Public comments will be accepted on or before May 24, 2010.

ADDRESSES: Send comments to Michael D. Wilson, Chief or Laurie Heupel, Outdoor Recreation Planner, State and Local Assistance Programs Division, National Park Service (2225), 1849 C Street, NW., Washington, DC 20240–0001 or via e-mail at *michael_d_wilson@nps.gov* or *laurie_heupel@nps.gov.* All responses to this notice will be summarized and included in the request.

TO REQUEST A DRAFT OF PROPOSED COLLECTION OF INFORMATION CONTACT: Michael D. Wilson, Chief or Laurie Heupel, Outdoor Recreation Planner, State and Local Assistance Programs Division, National Park Service (2225), 1849 C Street, NW., Washington, DC 20240–0001 or via e-mail at *Michael_d_wilson@nps.gov* or *Laurie_heupel@nps.gov.* You are entitled to a copy of the entire ICR package free-of-charge.

SUPPLEMENTARY INFORMATION:

OMB Control Number: 1024–0031.

Title: Land and Water Conservation Fund (LWCF) Description and Notification Form.

Form: NPS 10–903.

Type of Request: Extension of currently approved information collection.

Expiration date: August 31, 2010.

Abstract: The Description and Notification Form (DNF) is necessary to provide data input into the National Park Service automated project information system which provides timely data on projects funded over the life of the LWCF program. Such data is used to monitor project progress and to analyze overall trends in the LWCF assistance.

Affected Public: 56 State Governments, DC and Territories.

Obligation to Respond: Required to Obtain a Benefit.

Frequency of Response: On occasion.

Estimated total annual responses: 450.

Estimated average completion time per response: 1 hour.

Estimated annual reporting burden: 450 hours.

Estimated annual non-hour cost burden: $15,413.

The NPS also is asking for comments on (1) the practical utility of the information being gathered; (2) the accuracy of the burden hour estimate; (3) ways to enhance the quality, utility, and clarity of the information to be collected; and (4) ways to minimize the burden to respondents, including use of automated information collection techniques or other forms of information technology. Before including your address, phone number, e-mail address, or other personal identifying information in your comment, you should be aware that your entire comment—including your personal identifying information—may be made publicly available at any time. While you can ask us in your comment to withhold your personal identifying information we cannot guarantee that we will be able to do so.

Dated: March 19, 2010.

Cartina Miller,

Information Collection Officer, National Park Service.

[FR Doc. 2010–6466 Filed 3–23–10; 8:45 am]

BILLING CODE 4312–53–P

DEPARTMENT OF THE INTERIOR

National Park Service

National Register of Historic Places; Notification of Pending Nominations and Related Actions

Nominations for the following properties being considered for listing or related actions in the National Register were received by the National Park Service before March 5, 2010. Pursuant to section 60.13 of 36 CFR Part 60 written comments concerning the significance of these properties under the National Register criteria for evaluation may be forwarded by United States Postal Service, to the National Register of Historic Places, National Park Service, 1849 C St., NW., 2280, Washington, DC 20240; by all other carriers, National Register of Historic

Places, National Park Service,1201 Eye St., NW., 8th floor, Washington DC 20005; or by fax, 202–371–6447. Written or faxed comments should be submitted by April 8, 2010.

Before including your address, phone number, e-mail address, or other personal identifying information in your comment, you should be aware that your entire comment—including your personal identifying information—may be made publicly available at any time. While you can ask us in your comment to withhold your personal identifying information from public review, we cannot guarantee that we will be able to do so.

J. Paul Loether,

Chief, National Register of Historic Places/National Historic Landmarks Program.

ALABAMA

Madison County

Merrimack Mill Village Historic District, Alpine St., Triana Blvd., Dunn Dr., Cobb Rd., Drake Ave., & Grote St., Huntsville, 10000172

ARIZONA

Maricopa County

Kerr, Louise Lincoln, House and Studio, 6110 N. Scottsdale Rd., Scottsdale, 10000173

IDAHO

Bingham County

Lincoln Creek Day School, Rich Ln., eight mi. SE of St. Hwy. 91, Fort Hall, 10000174

ILLINOIS

Cook County

Jackson Shore Apartments, 5490 S. Shore Dr., Chicago, 10000175

West Chatham Bungalow Historic District, (Chicago Bungalows MPS) Bounded roughly by S. Perry Ave., (E), 82nd St. (S), S. Stewart Ave. (W), and W. 79th St. (N), Chicago, 10000176

KANSAS

Dickinson County

Rock Island Depot, (Historic Railroad Depots of Arkansas MPS) 200 SE Fifth St., Abilene, 10000177

Pottawatomie County

McKimmons, John, Barn, (Agriculture-Related Resources of Kansas) KS HWY 99, ¼ mile S of Westmoreland or ½ miles N of Hartwich Rd, Westmoreland, 10000178

Rice County

Shay Building, 202 S. Broadway Ave., Sterling, 10000179

Sumner County

Bartlett Arboretum, SW Corner of HWY 55 and Line St., Belle Plaine, 10000180

MISSOURI

Greene County

Producers Produce Company Plant, (Springfield MPS) 501 N. Main Ave., Springfield, 10000181

Livingston County

Chillicothe Industrial Home for Girls, 1500 Third St., Chillicothe, 10000182

MONTANA

Flathead County

Flathead River Bridge, (Montana's Historic Steel Truss Bridges) South end of 4th Ave., Columbia Falls, 10000183

Powder River County

Cheever/Cain Ranch, 8 Trails End Rd., Volberg, 10000184

NEW HAMPSHIRE

Grafton County

Enfield Village Historic District, Main St., U.S. Rte 4, High St., Balti St., Shaker Hill Rd., Wells St., Stevens, Union, & Pillsbury Sts, Shedd & Mill St., Enfield, 10000186

Hillsborough County

Bennington Village Historic District, Antrim Rd., Main St., School St., Cross St., Grancestown Rd., South Bennington Rd., Acre St., Old Stagecoach Rd., Starrett Rd. Bennington, 10000185

Rockingham County

Newington Depot/Toll House/Stationmaster's House, Bloody Point Rd., Newington, 10000187

Pulpit Rock Base-End Station (N. 142), Harbor Defenses of Portsmouth (NH), 9 Davis Rd., Rye, 10000188

OHIO

Cuyahoga County

Grant Deming's Forest Hill Allotment Historic District, Woodward Ave., Lincoln Blvd., Edgehill Rd., Parkway Dr. Redwood Rd., Cleveland Heights, 10000189

Franklin County

Worthington Historic District, Roughly bounded by North, South, Morning, and Evening Sts.,Worthington, 10000190

Hamilton County

Mount Airy Forest, (Historic Resources of the Cincinnati Park and Parkway System 1817–1959) 5083 Colerain Ave., Cincinnati, 10000191

Hocking County

Logan Historic District, Roughly Bounded by Second St., Spring St., Hill St., Keynes Dr. & Culver St., Logan, 10000192

Miami County

Detrick Milling and Distilling Company, 128 W. Broadway, Tipp City, 10000193

Saunders Seed Company, (Historic Industrial Resources of Tipp City, Ohio 1840–1959) 101 W Broadway, Tipp City, 10000194

SOUTH CAROLINA

Greenville County

Allen Temple A.M.E. Church, 109 Green Ave., at intersection with S. Markley St., Greenville, 10000195

VIRGINIA

Charlottesville Independent City

Woolen Mills Village Historic District, Parts of Chesapeake, Market, and other sts. in Charlottesville; parts of Pireus Row and Marchant, Charlottsville, 10000196

WISCONSIN

Door County

Cardy Site, (Paleo-Indian Tradition in Wisconsin MPS) 322 West Spruce St., Sturgeon Bay, 10000197

[FR Doc. 2010–6405 Filed 3–23–10; 8:45 am]

BILLING CODE P

DEPARTMENT OF THE INTERIOR

National Park Service

National Register of Historic Places; Weekly Listing of Historic Properties

Pursuant to (36 CFR 60.13(b,c)) and (36 CFR 63.5), this notice, through publication of the information included herein, is to apprise the public as well as governmental agencies, associations and all other organizations and individuals interested in historic preservation, of the properties added to, or determined eligible for listing in, the National Register of Historic Places from January 4 to January 8, 2010.

For further information, please contact Edson Beall via: United States Postal Service mail, at the National Register of Historic Places, 2280, National Park Service, 1849 C St. NW., Washington, DC 20240; in person (by appointment), 1201 Eye St., NW., 8th floor, Washington, DC 20005; by fax, 202–371–2229; by phone, 202–354–2255; or by e-mail, *Edson_Beall@nps.gov.*

Dated: March 16, 2010.

J. Paul Loether,

Chief, National Register of Historic Places/National Historic Landmarks Program.

KEY: State, County, Property Name, Address/Boundary, City, Vicinity, Reference Number, Action, Date, Multiple Name

CALIFORNIA

Humboldt County

Eureka Theatre, 612 F. St., Eureka, 09001199, LISTED, 1/07/10

Los Angeles County

Westlake Theatre, 634–642 S. Alvarado St., Los Angeles, 09001200, LISTED, 1/07/10

Sacramento County

SMUD Headquarters Building, 6301 S. St., Sacramento, 09001161, LISTED, 1/04/10

GEORGIA

Cobb County

Lake Acworth Beach and Bathhouse, Lakeshore Dr., Acworth, 09001202, LISTED, 1/07/10

IOWA

Buchanan County

Lee, Captain Daniel S. and Fannie L. (Brooks), House, 803 1st St. E., Independence, 09001203, LISTED, 1/07/10

KANSAS

Gray County

Barton, Welborn 'Doc', House, 202 S. Edwards St., Ingalls, 09001204, LISTED, 1/07/10

Sedgwick County

Blaser, Frank E., House, 136 N. Crestway Ave., Wichita, 09001205, LISTED, 1/07/10 (Residential Resources of Wichita, Sedgwick County, Kansas 1870–1957)

Guldner House, 1919 W. Douglas, Wichita, 09001206, LISTED, 1/07/10 (Residential Resources of Wichita, Sedgwick County, Kansas 1870–1957)

Trego County

Collyer Downtown Historic District, Area along Ainslie Ave., roughly bounded by 2nd St. on the N. and 4th St. on the S., Collyer, 09001207, LISTED, 1/07/10

MISSOURI

Adair County

Masonic Temple, 217 E. Harrison St., Kirksville, 09001208, LISTED, 1/07/10

MONTANA

Beaverhead County

Browne's Bridge, Browne's Bridge Fishing Access Site, Glen vicinity, 09001179, LISTED, 1/04/10 (Montana's Historic Steel Truss Bridges)

Cascade County

Hardy Bridge, Milepost 6 on Old US 91, Cascade vicinity, 09001180, LISTED, 1/04/10 (Montana's Historic Steel Truss Bridges)

Lewis and Clark County

Missouri River Bridge, Milepost 11 on Old US 91, Wolf Creek vicinity, 09001181, LISTED, 1/04/10 (Montana's Historic Steel Truss Bridges)

Mineral County

Natural Pier Bridge, Milepost 1 on S. Frontage Rd., Alberton vicinity, 09001182, LISTED, 1/04/10 (Montana's Historic Steel Truss Bridges)

Scenic Bridge, Milepost 0 on Old US 10 W., Tarkio vicinity, 09001183, LISTED, 1/04/10 (Montana's Historic Steel Truss Bridges)

Park County

Carbella Bridge, Milepost 0 on Tom Miner Rd. near jct of US 89, Gardiner vicinity, 09001184, LISTED, 1/04/10 (Montana's Historic Steel Truss Bridges)

Powell County

Little Blackfoot River Bridge, Milepost 0 on County Rd. 186 near jct. of US 12, Avon vicinity, 09001185, LISTED, 1/04/10 (Montana's Historic Steel Truss Bridges)

Prairie County

Powder River Bridge, Milepost 6 on 1–94 (Old US 10), Terry vicinity, 09001186, LISTED, 1/04/10 (Montana's Historic Steel Truss Bridges)

Yellowstone River Bridge, Milepost 1 on I–94 (Old US 10), Fallon vicinity, 09001187, LISTED, 1/04/10 (Montana's Historic Steel Truss Bridges)

Treasure County

Big Horn River Bridge, Milepost 2 on MT 104 (Old US 10), Custer vicinity, 09001188, LISTED, 1/04/10 (Montana's Historic Steel Truss Bridges)

NEW YORK

New York County

Fort Washington Presbyterian Church, 21 Wadsworth Ave., New York, 09001209, LISTED, 1/07/10

OREGON

Multnomah County

Ladd Carriage House, 1331 SW Broadway St., Portland, 09001211, LISTED, 1/07/10

PENNSYLVANIA

Philadelphia County

Pennsylvania State Office Building, 1400 Spring Garden St., Philadelphia, 09001216, LISTED, 1/07/10

WASHINGTON

Grant County

Hartline School, 92 Chelan St., Hartline, 09001217, LISTED, 1/07/10 (Rural Public Schools of Washington State MPS)

WISCONSIN

Green County

Cleveland's Hall and Blacksmith Shop, N7302 County Trunk Hwy X, Brooklyn, 09001220, LISTED, 1/07/10

WISCONSIN

Rock County

Robinson, John C. and Mary, Farmstead, 18002 W. Co. Trunk Hwy C, Union, 09001221, LISTED, 1/07/10

Dated: March 16, 2010.

J. Paul Loether,

Chief, National Register of Historic Places/National Historic Landmarks Program.

[FR Doc. 2010–6400 Filed 3–23–10; 8:45 am]

BILLING CODE 4312–51–P

DEPARTMENT OF JUSTICE

[OMB Number 1103–NEW]

Office of Community Oriented Policing Services; Agency Information Collection Activities: Proposed Collection; Comments Requested

ACTION: 60-day notice of information collection under review: COPS' Rural Law Enforcement National Training Assessment.

The Department of Justice (DOJ) Office of Community Oriented Policing Services (COPS) will be submitting the following information collection request to the Office of Management and Budget (OMB) for review and approval in accordance with the Paperwork Reduction Act of 1995. The proposed information collection is published to obtain comments from the public and affected agencies. The purpose of this notice is to allow for 60 days for public comment until May 24, 2010. This process is conducted in accordance with 5 CFR 1320.10.

If you have comments especially on the estimated public burden or associated response time, suggestions, or need a copy of the proposed information collection instrument with instructions or additional information, please contact Ashley Hoornstra, Department of Justice Office of Community Oriented Policing Services, 1100 Vermont Avenue, NW., Washington, DC 20530.

Written comments and suggestions from the public and affected agencies concerning the proposed collection of information are encouraged. Your comments should address one or more of the following four points:

—Evaluate whether the proposed collection of information is necessary for the proper performance of the functions of the agency, including whether the information will have practical utility;

—Evaluate the accuracy of the agency's estimate of the burden of the proposed collection of information, including the validity of the methodology and assumptions used;

—Enhance the quality, utility, and clarity of the information to be collected; and

—Minimize the burden of the collection of information on those who are to respond, including through the use of appropriate automated, electronic, mechanical, or other technological collection techniques or other forms of information technology, *e.g.,* permitting electronic submission of responses.

Overview of This Information Collection

(1) *Type of Information Collection:* New collection.

(2) *Title of the Form/Collection:* COPS' Rural Law Enforcement National Training Assessment.

(3) *Agency form number, if any, and the applicable component of the Department sponsoring the collection:* None. U.S. Department of Justice Office of Community Oriented Policing Services.

(4) *Affected public who will be asked or required to respond, as well as a brief abstract:* Primary: Law enforcement agencies.

(5) *An estimate of the total number of respondents and the amount of time estimated for an average respondent to respond/reply:* It is estimated that approximately 6,569 respondents biannually will complete the form within 27 minutes.

(6) *An estimate of the total public burden (in hours) associated with the collection:* 2,955 total burden hours.

If additional information is required, contact: Lynn Bryant, Department Clearance Officer, United States Department of Justice, Justice Management Division, Policy and Planning Staff, Patrick Henry Building, Suite 1600, 601 D Street NW., Washington, DC 20530.

Dated: March 18, 2010.

Lynn Bryant,

Department Clearance Officer, PRA, U.S. Department of Justice.

[FR Doc. 2010–6427 Filed 3–23–10; 8:45 am]

BILLING CODE 4410–AT–P

DEPARTMENT OF JUSTICE

Notice of Proposed Consent Decree Under the Comprehensive Environmental Response, Compensation, and Liability Act

Notice is hereby given that on March 18, 2010, the United States lodged a proposed Consent Decree in *United States* v. *All Metals Processing Company, et al.,* Case No. 09–06363 JFW (Sept. 1, 2009, C.D. Cal.). On September 1, 2009, the United States filed a complaint against All Metals Processing Company, the Estate of Helen L. Powers ("Estate"), and Barbara C. Harker, in her capacity as personal representative of the Estate, under CERCLA Section 107(a), 42 U.S.C. 9607(a), seeking recovery of past response costs and for future costs incurred by the United States Environmental Protection Agency ("EPA") in connection with the release or threatened release of hazardous substances at 264 W. Spazier Avenue in Burbank, Los Angeles County, California (the "Property").

The proposed Consent Decree resolves the claims in the Complaint against the Estate and Barbara C. Harker, in her capacity as personal representative of the Estate. Under the terms of the Consent Decree, the Estate has agreed to sell the Property. Proceeds of the sale of the Property, after costs, will be divided between the United States and the Estate, with the United States receiving 85% of the sale proceeds and the Estate receiving 15% of the sale proceeds. In addition, the Estate will transfer to the United States all proceeds recovered under the Estate's insurance policies covering the Property. In return, the Estate and Barbara C. Harker, in her representative capacity, will receive a covenant not to sue from the United States with respect to past and future response costs at the Property under Section 107(a) of CERCLA, 42 U.S.C. 9607(a).

The Department of Justice will receive for a period of thirty (30) days from the date of this publication comments relating to the Consent Decree. Comments should be addressed to Ignacia S. Moreno, Assistant Attorney General, Environment and Natural Resources Division, and either e-mailed to *pubcomment-ees.enrd@usdoj.gov* or mailed to P.O. Box 7611, U.S. Department of Justice, Washington, DC 20044–7611, and should refer to *United States* v. *All Metals Processing Company, et al.,* Case No. 09–06363 JFW (Sept. 1, 2009, C.D. Cal.), D.J. Ref. 90–11–3–09578.

The Consent Decree may be examined at the U.S. Environmental Protection Agency, Region 9, Office of Regional Counsel, 75 Hawthorne Street, San Francisco, California 94105. During the public comment period, the Consent Decree may also be examined on the following Department of Justice Web site: *http://www.usdoj.gov/enrd/Consent_Decrees.html.* A copy of the Settlement Agreement may also be obtained by mail from the Consent Decree Library, P.O. Box 7611, U.S. Department of Justice, Washington, DC 20044–7611, or by faxing or e-mailing a request to Tonia Fleetwood (*tonia.fleetwood@usdoj.gov*), fax number (202) 514–0097, phone confirmation number (202) 514–1547. In requesting a copy from the Consent Decree Library, please enclose a check in the amount of $6.50 (25 cents per page reproduction cost) payable to the U.S. Treasury, or if by e-mail or fax, forward a check in that amount to the Consent Decree Library at the stated address.

Dated: March 19, 2010.

Maureen Katz,

Assistant Chief, Environmental Enforcement Section, Environment and Natural Resources Division.

[FR Doc. 2010–6497 Filed 3–23–10; 8:45 am]

BILLING CODE 4410–15–P

DEPARTMENT OF JUSTICE

Office of Justice Programs

[OMB Number 1121–0309]

Agency Information Collection Activities; Proposed Collection; Comments Requested

ACTION: 30-Day Notice of Information Collection Under Review: International Terrorism Victim Compensation Program Application.

The Department of Justice (DOJ), Office of Justice Programs (OJP) will be submitting the following information collection request to the Office of Management and Budget (OMB) for review and approval in accordance with the Paperwork Reduction Act of 1995. The proposed information collection is published to obtain comments from the public and affected agencies. This proposed information collection was previously published in the **Federal Register** Volume 75, Number 14, page 3758, on January 22, 2010, allowing for a 60 day comment period.

The purpose of this notice is to allow for an additional 30 days for public comment until April 23, 2010. This process is conducted in accordance with 5 CFR 1320.10.

Written comments and/or suggestions regarding the items contained in this notice, especially the estimated public burden and associated response time, should be directed to the Office of Management and Budget, Office of Information and Regulatory Affairs, Attention Department of Justice Desk Officer, Washington, DC 20503. Additionally, comments may be submitted to OMB via facsimile to (202) 395–5806.

Written comments and suggestions from the public and affected agencies concerning the proposed collection of information are encouraged.

Your comments should address one or more of the following points:

(1) Evaluate whether the proposed collection of information is necessary for the proper performance of the functions of the agency, including whether the information will have practical utility;

(2) Evaluate the accuracy of the agencies estimate of the burden of the

proposed collection of information, including the validity of methodology and assumptions used;

(3) Enhance the quality, utility, and clarity of the information to be collected; and,

(4) Minimize the burden of the collection of information on those who are to respond, including the use of appropriate automated, electronic, mechanical, or other technological collection techniques or other forms of information technology, *e.g.,* permitting electronic submission of responses.

Overview of this Information Collection:

(1) *Type of Information Collection:* Reinstatement, with no change, of a previously approved collection for which approval has expired.

(2) *Title of Form/Collection:* International Terrorism Victim Expense Reimbursement Program (ITVERP) Application.

(3) *Agency form number, if any, and the applicable component of the Department of Justice sponsoring the collection:* Form Number: The Office of Management and Budget Number for the certification form is 1121–0309. The Office for Victims of Crime, Office of Justice Programs, United States Department of Justice is sponsoring the collection.

(4) *Affected public who will be asked or required to respond, as well as a brief abstract:* Primary: The form is completed by U.S. nationals and U.S. government employees who become victims of acts of international terrorism that occur outside the United States. Applicants seeking compensation from OVC for expenses associated with their victimization will be required to submit said form. The form will be used to collect necessary information on expenses incurred by the applicant, as well as other pertinent information, and will be used by OVC to make an award determination.

(5) *An estimate of the total number of respondents and the amount of time estimated for an average to respond:* The total hour burden to complete the forms is 1,500 annual burden hours.

(6) *An estimate of the total public burden (in hours) associated with the collection:* There are approximately 1,500 hours annual burden associated with this information collection.

If additional information is required contact: Lynn Bryant, Department Clearance Officer, Policy and Planning Staff, Justice Management Division, United States Department of Justice, 601 D Street NW., Patrick Henry Building, Suite 1600, NW., Washington, DC 20530.

Dated: March 18, 2010.

Lynn Bryant,

Department Clearance Officer, United States Department of Justice.

[FR Doc. 2010–6440 Filed 3–23–10; 8:45 am]

BILLING CODE 4410–18–P

DEPARTMENT OF JUSTICE

Office of Justice Programs

[OMB Number 1121–0220]

Agency Information Collection Activities: Extension of a Currently Approved Collection: Comments Requested

ACTION: 30 Day Notice of Information Collection Under Review: Extension of a currently approved collection. Bureau of Justice Assistance Application Form: *Public Safety Officers Educational Assistance.*

The Department of Justice (DOJ), Office of Justice Programs (OJP) will be submitting the following information collection request to the Office of Management and Budget (OMB) for review and approval in accordance with the Paperwork Reduction Act of 1995. The proposed information collection is published to obtain comments from the public and affected agencies. This proposed information collection was previously published in the **Federal Register** Volume 75, Number 8, page 1811 on January 13, 2010, allowing for a 60 day comment period.

The purpose of this notice is to allow for an additional 30 days for public comment until April 23, 2010. This process is conducted in accordance with 5 CFR 1320.10.

Written comments and/or suggestions regarding the items contained in this notice, especially the estimated public burden and associated response time, should be directed to the Office of Management and Budget, Office of Information and Regulatory Affairs, Attention Department of Justice Desk Officer, Washington, DC 20503. Additionally, comments may be submitted to OMB via facsimile to (202) 395–5806. Comments may also be submitted to M. Berry, Bureau of Justice Assistance, Office of Justice Programs, U. S. Department of Justice, 810 7th Street, NW., Washington, DC 20531 via facsimile to (202) 305–1367 or by e-mail at *M.A.Berry@ojp.usdoj.gov.*

Written comments and suggestions from the public and affected agencies concerning the proposed collection of information are encouraged. Your comments should address one or more of the following four points:

—Evaluate whether the proposed collection of information is necessary for the proper performance of the functions of the agency, including whether the information will have practical utility;

—Evaluate the accuracy of the agency's estimate of the burden of the proposed collection of information, including the validity of the methodology and assumptions used;

—Enhance the quality, utility, and clarity of the information to be collected; and

—Minimize the burden of the collection of information on those who are to respond, including through the use of appropriate automated, electronic, mechanical, or other technological collection techniques or other forms of information technology, *e.g.,* permitting electronic submission of responses.

Overview of This Information Collection:

(1) *Type of Information Collection:* Extension of a currently approved collection.

(2) *Title of the Form/Collection:* Public Safety Officers' Educational Assistance.

(3) *Agency form number, if any, and the applicable component of the Department of Justice sponsoring the collection:* None.

(4) *Affected public who will be asked or required to respond, as well as a brief abstract:*

Primary: Dependent spouses and/or children of public safety officers who were killed or permanently and totally disabled in the line of duty.

Abstract: BJA's Public Safety Officers' Benefits (PSOB) Office will use the PSOEA application information to confirm the eligibility of applicants to receive PSOEA benefits. Eligibility is dependent on several factors, including the applicant having received or being eligible to receive a portion of the PSOB death benefit, or having a family member who received the PSOB disability benefit. Also considered are the applicant's age and the schools being attended. In addition, information to help BJA identify an individual is collected, such as Social Security Number and contact numbers and e-mail addresses. The changes to the application form have been made in an effort to streamline the application process and eliminate requests for information that is either irrelevant or already being collected by other means.

Others: None.

(5) *An estimate of the total number of respondents and the amount of time needed for an average respondent to*

respond is as follows: It is estimated that no more than 100 new respondents will apply a year. Each application takes approximately 20 minutes to complete.

(6) An estimate of the total public burden (in hours) associated with the collection is 33 hours. *Total Annual Reporting Burden:* 100 × 20 minutes per application = 2000 minutes/by 60 minutes per hour = 33 hours.

If additional information is required, please contact, Lynn Bryant, Department Clearance Officer, United States Department of Justice, Justice Management Division, Policy and Planning Staff, Patrick Henry Building, Suite 1600, 601 D Street, NW., Washington, DC 20530.

Dated: March 18, 2010.

Lynn Bryant,

Department Clearance Officer, PRA, United States Department of Justice.

[FR Doc. 2010–6441 Filed 3–23–10; 8:45 am]

BILLING CODE 4410–18–P

DEPARTMENT OF JUSTICE

Drug Enforcement Administration

Importer of Controlled Substances; Notice of Application

Pursuant to 21 U.S.C. 958(i), the Attorney General shall, prior to issuing a registration under this Section to a bulk manufacturer of a controlled substance in schedule I or II, and prior to issuing a regulation under 21 U.S.C. 952(a)(2) authorizing the importation of such a substance, provide manufacturers holding registrations for the bulk manufacture of the substance an opportunity for a hearing.

Therefore, in accordance with Title 21 Code of Federal Regulations (CFR), 1301.34(a), this is notice that on January 21, 2010, Roche Diagnostics Operations Inc., Attn: Regulatory Compliance, 9115 Hague Road, Indianapolis, Indiana 46250, made application by renewal to the Drug Enforcement Administration (DEA) to be registered as an importer of the basic classes of controlled substances listed in schedules I and II:

Drug	Schedule
Lysergic acid diethylamide (7315)	I
Tetrahydrocannabinols (7370)	I
Alphamethadol (9605)	I
Cocaine (9041)	II
Ecgonine (9180)	II
Methadone (9250)	II
Morphine (9300)	II

The company plans to import the listed controlled substances for the manufacture of diagnostic products for distribution to its customers.

Any bulk manufacturer who is presently, or is applying to be, registered with DEA to manufacture such basic classes of controlled substances may file comments or objections to the issuance of the proposed registration and may, at the same time, file a written request for a hearing on such application pursuant to 21 CFR 1301.43, and in such form as prescribed by 21 CFR 1316.47.

Any such comments or objections should be addressed, in quintuplicate, to the Drug Enforcement Administration, Office of Diversion Control, Federal Register Representative (ODL), 8701 Morrissette Drive, Springfield, Virginia 22152; and must be filed no later than April 23, 2010.

This procedure is to be conducted simultaneously with, and independent of, the procedures described in 21 CFR 1301.34(b), (c), (d), (e), and (f). As noted in a previous notice published in the **Federal Register** on September 23, 1975, (40 FR 43745–46), all applicants for registration to import a basic class of any controlled substance in schedule I or II are, and will continue to be, required to demonstrate to the Deputy Assistant Administrator, Office of Diversion Control, Drug Enforcement Administration, that the requirements for such registration pursuant to 21 U.S.C. 958(a); 21 U.S.C. 823(a); and 21 CFR 1301.34(b), (c), (d), (e), and (f) are satisfied.

Dated: March 16, 2010.

Joseph T. Rannazzisi,

Deputy Assistant Administrator, Office of Diversion Control, Drug Enforcement Administration.

[FR Doc. 2010–6411 Filed 3–23–10; 8:45 am]

BILLING CODE 4410–09–P

DEPARTMENT OF JUSTICE

Drug Enforcement Administration

Importer of Controlled Substances; Notice of Registration

By a Notice dated June 24, 2009, and published in the **Federal Register** on July 9, 2009 (74 FR 32954) and by a second Notice (Correction) dated August 21, 2009, and published in the **Federal Register** on September 8, 2009 (74 FR 46229), Rhodes Technologies, 498 Washington Street, Coventry, Rhode Island 02816, made application by renewal to the Drug Enforcement Administration (DEA) to be registered as an importer of the basic classes of controlled substances listed in schedule II:

Drug	Schedule
Raw Opium (9600)	II
Concentrate of Poppy Straw (9670).	II

The company plans to import the listed controlled substances to manufacture bulk active pharmaceutical ingredients.

No comments or objections have been received. DEA has considered the factors in 21 U.S.C 823(a) and § 952(a), and determined that the registration of Rhodes Technologies to import the basic classes of controlled substances is consistent with the public interest, and with United States obligations under international treaties, conventions, or protocols in effect on May 1, 1971, at this time. DEA has investigated Rhodes Technologies to ensure that the company's registration is consistent with the public interest. The investigation has included inspection and testing of the company's physical security systems, verification of the company's compliance with state and local laws, and a review of the company's background and history. Therefore, pursuant to 21 U.S.C. 952(a) and § 958(a), and in accordance with 21 CFR 1301.34, the above named company is granted registration as an importer of the basic classes of controlled substances listed.

Dated: March 16, 2010.

Joseph T. Rannazzisi,

Deputy Assistant Administrator, Office of Diversion Control, Drug Enforcement Administration.

[FR Doc. 2010–6418 Filed 3–23–10; 8:45 am]

BILLING CODE 4410–09–P

DEPARTMENT OF JUSTICE

Drug Enforcement Administration

Importer of Controlled Substances; Notice of Registration

By Notice dated November 23, 2009, and published in the **Federal Register** on December 3, 2009 (74 FR 63411), Noramco, Inc., Division of Ortho-McNeil, Inc., 500 Swedes Landing Road, Wilmington, Delaware 19801, made application by renewal to the Drug Enforcement Administration (DEA) to be registered as an importer of the basic classes of controlled substances listed in schedule II:

Drug	Schedule
Opium, raw (9600)	II
Poppy Straw Concentrate (9670)	III

The company plans to import the listed controlled substances to manufacture other controlled substances.

No comments or objections have been received. DEA has considered the factors in 21 U.S.C. 823(a) and 952(a), and determined that the registration of Noramco Inc. to import the basic classes of controlled substances is consistent with the public interest, and with United States obligations under international treaties, conventions, or protocols in effect on May 1, 1971, at this time. DEA has investigated Noramco Inc. to ensure that the company's registration is consistent with the public interest. The investigation has included inspection and testing of the company's physical security systems, verification of the company's compliance with state and local laws, and a review of the company's background and history. Therefore, pursuant to 21 U.S.C. 952(a) and 958(a), and in accordance with 21 CFR 1301.34, the above named company is granted registration as an importer of the basic classes of controlled substances listed.

Dated: March 16, 2010.

Joseph T. Rannazzisi,

Deputy Assistant Administrator, Office of Diversion Control, Drug Enforcement Administration.

[FR Doc. 2010–6412 Filed 3–23–10; 8:45 am]

BILLING CODE 4410–09–P

DEPARTMENT OF JUSTICE

Drug Enforcement Administration

Importer of Controlled Substances; Notice of Registration

By Notice dated December 1, 2009, and published in the **Federal Register** on December 11, 2009 (74 FR 65788), Tocris Cookson Inc., 16144 Westwoods Business Park, Ellisville, Missouri 63021–4500, made application by renewal to the Drug Enforcement Administration (DEA) to be registered as an importer of the basic classes of controlled substances listed in schedules I and II:

Drug	Schedule
Marihuana (7360)	I
Tetrahydrocannabinols (7370)	I
4-Bromo-2,5-dimethoxyamphetamine (7391).	I
3,4-Methylenedioxymethamphetamine (7405).	I
Amphetamine (1100)	II
Phencyclidine (7471)	II
Cocaine (9041)	II
Diprenorphine (9058)	II
Fentanyl (9801)	II

The company plans to import small quantities of the above listed controlled substances for non-clinical, laboratory-based research only.

In reference to drug code 7360 (Marihuana), the company plans to import synthetic cannabinoid agonists. In reference to drug code 7370 (Tetrahydrocannabinols), the company will import a synthetic Delta-9-THC. No other activity for these drug codes is authorized for this registration.

No comments or objections have been received. DEA has considered the factors in 21 U.S.C. 823(a) and 952(a), and determined that the registration of Tocris Cookson Inc. to import the basic classes of controlled substances is consistent with the public interest, and with United States obligations under international treaties, conventions, or protocols in effect on May 1, 1971, at this time. DEA has investigated Tocris Cookson Inc. to ensure that the company's registration is consistent with the public interest. The investigation has included inspection and testing of the company's physical security systems, verification of the company's compliance with state and local laws, and a review of the company's background and history. Therefore, pursuant to 21 U.S.C. 952(a) and 958(a), and in accordance with 21 CFR 1301.34, the above named company is granted registration as an importer of the basic classes of controlled substances listed.

Dated: March 16, 2010.

Joseph T. Rannazzisi,

Deputy Assistant Administrator, Office of Diversion Control, Drug Enforcement Administration.

[FR Doc. 2010–6417 Filed 3–23–10; 8:45 am]

BILLING CODE 4410–09–P

DEPARTMENT OF JUSTICE

Drug Enforcement Administration

Importer of Controlled Substances; Notice of Registration

By Notice dated January 6, 2010, and published in the **Federal Register** on January 13, 2010 (75 FR 1812), Mallinckrodt Inc., 3600 North Second Street, St. Louis, Missouri 63147, made application by renewal to the Drug Enforcement Administration (DEA) to be registered as an importer of the basic classes of controlled substances listed in schedule II:

Drug	Schedule
Phenylacetone (8501)	II
Coca Leaves (9040)	II
Opium, raw (9600)	II
Poppy Straw Concentrate (9670)	II

The company plans to import the listed controlled substances for the manufacture of controlled substances in bulk for distribution to its customers.

No comments or objections have been received. DEA has considered the factors in 21 U.S.C. 823(a) and 952(a), and determined that the registration of Mallinckrodt Inc. to import the basic classes of controlled substances is consistent with the public interest, and with United States obligations under international treaties, conventions, or protocols in effect on May 1, 1971, at this time. DEA has investigated Mallinckrodt Inc. to ensure that the company's registration is consistent with the public interest. The investigation has included inspection and testing of the company's physical security systems, verification of the company's compliance with state and local laws, and a review of the company's background and history. Therefore, pursuant to 21 U.S.C. 952(a) and 958(a), and in accordance with 21 CFR 1301.34, the above named company is granted registration as an importer of the basic classes of controlled substances listed.

Dated: March 16, 2010.

Joseph T. Rannazzisi,

Deputy Assistant Administrator, Office of Diversion Control, Drug Enforcement Administration.

[FR Doc. 2010–6413 Filed 3–23–10; 8:45 am]

BILLING CODE 4410–09–P

DEPARTMENT OF JUSTICE

Drug Enforcement Administration

Importer of Controlled Substances; Notice of Application

Pursuant to 21 U.S.C. 958(i), the Attorney General shall, prior to issuing a registration under this Section to a bulk manufacturer of a controlled substance in schedule I or II, and prior to issuing a regulation under 21 USC 952(a)(2) authorizing the importation of such a substance, provide manufacturers holding registrations for the bulk manufacture of the substance an opportunity for a hearing.

Therefore, in accordance with Title 21 of the Code of Federal Regulations (CFR), 1301.34(a), this is notice that on January 22, 2010, Meridian Medical Technologies, 2555 Hermelin Drive, St. Louis, Missouri 63144, made

application by renewal to the Drug Enforcement Administration (DEA) to be registered as an importer of Morphine (9300), a basic class of controlled substance listed in schedule II.

The company manufactures a product containing morphine in the United States. The company exports this product to customers around the world, including in Europe. The company has been asked to ensure that its product sold to European customers meets standards established by the European Pharmacopeia, which is administered by the Directorate for the Quality of Medicines (EDQM). In order to ensure that its product will meet European specifications, the company seeks to import morphine supplied by EDQM to use as reference standards. This is the sole purpose for which the company will be authorized by DEA to import morphine.

Any bulk manufacturer who is presently, or is applying to be, registered with DEA to manufacture such basic class of controlled substance may file comments or objections to the issuance of the proposed registration and may, at the same time, file a written request for a hearing on such application pursuant to 21 CFR 1301.43, and in such form as prescribed by 21 CFR 1316.47.

Any such comments or objections should be addressed, in quintuplicate, to the Drug Enforcement Administration, Office of Diversion Control, Federal Register Representative (ODL), 8701 Morrissette Drive, Springfield, Virginia 22152; and must be filed no later than April 23, 2010.

This procedure is to be conducted simultaneously with, and independent of, the procedures described in 21 CFR § 1301.34(b), (c), (d), (e), and (f). As noted in a previous notice published in the **Federal Register** on September 23, 1975 (40 FR 43745–46), all applicants for registration to import a basic class of any controlled substance in schedule I or II are, and will continue to be, required to demonstrate to the Deputy Assistant Administrator, Office of Diversion Control, Drug Enforcement Administration, that the requirements for such registration pursuant to 21 U.S.C. 958(a); 21 U.S.C. 823(a); and 21 CFR 1301.34(b), (c), (d), (e), and (f) are satisfied.

Dated: March 16, 2010.

Joseph T. Rannazzisi,

Deputy Assistant Administrator, Office of Diversion Control, Drug Enforcement Administration.

[FR Doc. 2010–6443 Filed 3–23–10; 8:45 am]

BILLING CODE 4410–09–P

DEPARTMENT OF JUSTICE

Drug Enforcement Administration

Importer of Controlled Substances; Notice of Application

Pursuant to 21 U.S.C. 958(i), the Attorney General shall, prior to issuing a registration under this Section to a bulk manufacturer of a controlled substance in schedule I or II, and prior to issuing a regulation under 21 U.S.C. 952(a)(2) authorizing the importation of such a substance, provide manufacturers holding registrations for the bulk manufacture of the substance an opportunity for a hearing.

Therefore, in accordance with 21 CFR 1301.34(a), this is notice that on January 6, 2010, Sigma Aldrich Manufacturing LLC., 3500 Dekalb Street, St. Louis, Missouri 63118, made application by renewal to the Drug Enforcement Administration (DEA) to be registered as an importer of the basic classes of controlled substances listed in schedules I and II:

Drug	Schedule
Cathinone (1235)	I
Methcathinone (1237)	I
Aminorex (1585)	I
Gamma Hydroxybutyric Acid (2010).	I
Methaqualone (2565)	I
Alpha-ethyltryptamine (7249)	I
Ibogaine (7260)	I
Lysergic acid diethylamide (7315)	I
Marihuana (7360)	I
Tetrahydrocannabinols (7370)	I
Mescaline (7381)	I
4-Bromo-2,5-dimethoxyamphetamine (7391).	I
4-Bromo-2,5-dimethoxyphenethylamine (7392).	I
4-Methyl-2,5-dimethoxyamphetamine (7395).	I
2,5-Dimethoxyamphetamine (7396).	I
3,4-Methylenedioxyamphetamine (7400).	I
N-Hydroxy-3,4-methylenedioxyamphetamine (7402).	I
3,4-Methylenedioxy-N-ethylamphetamine (7404).	I
3,4-Methylenedioxymethamphetamine (MDMA) (7405).	I
4-Methoxyamphetamine (7411)	I
Bufotenine (7433)	I
Diethyltryptamine (7434)	I
Dimethyltryptamine (7435)	I
Psilocybin (7437)	I
Psilocyn (7438)	I
1-[1-(2–Thienyl)cyclohexyl]piperidine (7470).	I
N-Benzylpiperazine (BZP) (7493)	I
Heroin (9200)	I
Normorphine (9313)	I
Etonitazene (9624)	I
Amphetamine (1100)	II
Methamphetamine (1105)	II
Methylphenidate (1724)	II
Amobarbital (2125)	II
Pentobarbital (2270)	II
Secobarbital (2315)	II
Glutethimide (2550)	II
Nabilone (7379)	II
Phencyclidine (7471)	II
Cocaine (9041)	II
Codeine (9050)	II
Diprenorphine (9058)	II
Oxycodone (9143)	II
Hydromorphone (9150)	II
Diphenoxylate (9170)	II
Ecgonine (9180)	II
Ethylmorphine (9190)	II
Hydrocodone (9193)	II
Levorphanol (9220)	II
Meperidine (9230)	II
Methadone (9250)	II
Morphine (9300)	II
Thebaine (9333)	II
Opium, powdered (9639)	II
Levo-alphacetylmethadol (9648)	II
Oxymorphone (9652)	II
Fentanyl (9801)	II

The company plans to import the listed controlled substances for sale to research facilities for drug testing and analysis.

Any bulk manufacturer who is presently, or is applying to be, registered with DEA to manufacture such basic classes of controlled substances may file comments or objections to the issuance of the proposed registration and may, at the same time, file a written request for a hearing on such application pursuant to 21 CFR 1301.43, and in such form as prescribed by 21 CFR 1316.47.

Any such comments or objections should be addressed, in quintuplicate, to the Drug Enforcement Administration, Office of Diversion Control, Federal Register Representative (ODL), 8701 Morrissette Drive, Springfield, Virginia 22152; and must be filed no later than April 23, 2010.

This procedure is to be conducted simultaneously with, and independent of, the procedures described in 21 CFR 1301.34(b), (c), (d), (e), and (f). As noted in a previous notice published in the **Federal Register** on September 23, 1975, (40 FR 43745–46), all applicants for registration to import a basic class of any controlled substance in schedule I or II are, and will continue to be, required to demonstrate to the Deputy Assistant Administrator, Office of Diversion Control, Drug Enforcement Administration, that the requirements for such registration pursuant to 21 U.S.C. 958(a); 21 U.S.C. 823(a); and 21 CFR 1301.34(b), (c), (d), (e), and (f) are satisfied.

Dated: March 16, 2010.

Joseph T. Rannazzisi,

Deputy Assistant Administrator, Office of Diversion Control, Drug Enforcement Administration.

[FR Doc. 2010–6444 Filed 3–23–10; 8:45 am]

BILLING CODE 4410–09–P

DEPARTMENT OF JUSTICE

Drug Enforcement Administration

Manufacturer of Controlled Substances; Notice of Application

Pursuant to § 1301.33(a) of Title 21 of the Code of Federal Regulations (CFR), this is notice that on January 21, 2009, Archimica, Inc., 2460 W. Bennett Street, Springfield, Missouri 65807–1229, made application by letter to the Drug Enforcement Administration (DEA) to be registered as a bulk manufacturer of Amphetamine (1100), a basic class of controlled substance listed in schedule II.

The company plans to acquire the listed controlled substance in bulk from a domestic source in order to manufacture other controlled substances in bulk for distribution to its customers.

Any other such applicant, and any person who is presently registered with DEA to manufacture such substances, may file comments or objections to the issuance of the proposed registration pursuant to 21 CFR 1301.33(a).

Any such written comments or objections should be addressed, in quintuplicate, to the Drug Enforcement Administration, Office of Diversion Control, Federal Register Representative (ODL), 8701 Morrissette Drive, Springfield, Virginia 22152; and must be filed no later than May 24, 2010.

Dated: March 16, 2010.

Joseph T. Rannazzisi,

Deputy Assistant Administrator, Office of Diversion Control, Drug Enforcement Administration.

[FR Doc. 2010–6425 Filed 3–23–10; 8:45 am]

BILLING CODE 4410–09–P

DEPARTMENT OF JUSTICE

Drug Enforcement Administration

Manufacturer of Controlled Substances; Notice of Application

Pursuant to § 1301.33(a) of Title 21 of the Code of Federal Regulations (CFR), this is notice that on October 8, 2009, Norac Inc., 405 S. Motor Avenue, P.O. Box 577, Azusa, California 91702–3232, made application by renewal to the Drug Enforcement Administration (DEA) to be registered as a bulk manufacturer of the basic classes of controlled substances listed in schedules I and II:

Drug	Schedule
Gamma Hydroxybutyric Acid (2010).	I
Tetrahydrocannabinols (7370)	I
Methamphetamine (1105)	II
Nabilone (7379)	II

With regard to Gamma Hydroxybutyric Acid (2010), Tetrahydrocannabinols (7370), and Methamphetamine (1105) only, the company manufactures these controlled substances in bulk solely for domestic distribution within the United States to customers engaged in dosage-form manufacturing.

With regard to Nabilone (7379) only, the company presently manufactures a small amount of this controlled substance in bulk solely to conduct manufacturing process development internally within the company. It is the company's intention that, when the manufacturing process is refined to the point that its Nabilone bulk product is available for commercial use, the company will export the controlled substance in bulk solely to customers engaged in dosage-form manufacturing outside the United States. The company is aware of the requirement to obtain a DEA registration as an exporter to conduct this activity.

Any other such applicant, and any person who is presently registered with DEA to manufacture such substances, may file comments or objections to the issuance of the proposed registration pursuant to 21 CFR 1301.33(a).

Any such written comments or objections should be addressed, in quintuplicate, to the Drug Enforcement Administration, Office of Diversion Control, Federal Register Representative (ODL), 8701 Morrissette Drive, Springfield, Virginia 22152; and must be filed no later than May 24, 2010.

Dated: March 16, 2010.

Joseph T. Rannazzi

Deputy Assistant Administrator, Office of Diversion Control, Drug Enforcement Administration.

[FR Doc. 2010–6424 Filed 3–23–10; 8:45 am]

BILLING CODE 4410–09–P

DEPARTMENT OF JUSTICE

Drug Enforcement Administration

Manufacturer of Controlled Substances; Notice of Application

Pursuant to § 1301.33(a) of Title 21 of the Code of Federal Regulations (CFR), this is notice that on February 19, 2010, Rhodes Technologies, 498 Washington Street, Coventry, Rhode Island 02816, made application by renewal to the Drug Enforcement Administration (DEA) as a bulk manufacturer of the basic classes of controlled substances in schedules I and II:

Drug	Schedule
Tetrahydrocannabinols (7370)	I
Methylphenidate (1724)	II
Codeine (9050)	II
Dihydrocodeine (9120)	II
Oxycodone (9143)	II
Hydromorphone (9150)	II
Hydrocodone (9193)	II
Oripavine (9330)	II
Thebaine (9333)	II
Oxymorphone (9652)	II
Noroxymorphone (9668)	II
Fentanyl (9801)	II

The company plans to manufacture the listed controlled substances in bulk for conversion and sale to dosage form manufacturers.

Any other such applicant, and any person who is presently registered with DEA to manufacture such substances, may file comments or objections to the issuance of the proposed registration pursuant to 21 CFR 1301.33(a).

Any such written comments or objections should be addressed, in quintuplicate, to the Drug Enforcement Administration, Office of Diversion Control, Federal Register Representative (ODL), 8701 Morrissette Drive, Springfield, Virginia 22152; and must be filed no later than May 24, 2010.

Dated: March 16, 2010.

Joseph T. Rannazzisi,

Deputy Assistant Administrator, Office of Diversion Control, Drug Enforcement Administration.

[FR Doc. 2010–6422 Filed 3–23–10; 8:45 am]

BILLING CODE 4410–09–P

DEPARTMENT OF JUSTICE

Drug Enforcement Administration

Manufacturer of Controlled Substances; Notice of Application

Pursuant to § 1301.33(a) of Title 21 of the Code of Federal Regulations (CFR), this is notice that on January 14, 2010, Siegfried (USA), 33 Industrial Park Road, Pennsville, New Jersey 08070, made application by renewal to the Drug Enforcement Administration (DEA) as a bulk manufacturer of the basic classes of controlled substances in schedules I and II:

Drug	Schedule
Dihydromorphine (9145)	I
Amphetamine (1100)	II
Methylphenidate (1724)	II
Amobarbital (2125)	II
Pentobarbital (2270)	II
Secobarbital (2315)	II
Glutethimide (2550)	II
Codeine (9050)	II
Oxycodone (9143)	II
Hydromorphone (9150)	II
Hydrocodone (9193)	II
Methadone (9250)	II
Methadone intermediate (9254)	II
Dextropropoxyphene, bulk (non-dosage forms) (9273).	II
Morphine (9300)	II
Oripavine (9330)	II
Oxymorphone (9652)	II

The company plans to manufacture the listed controlled substances in bulk for distribution to its customers.

Any other such applicant, and any person who is presently registered with DEA to manufacture such substances, may file comments or objections to the issuance of the proposed registration pursuant to 21 CFR 1301.33(a).

Any such written comments or objections should be addressed, in quintuplicate, to the Drug Enforcement Administration, Office of Diversion Control, Federal Register Representative (ODL), 8701 Morrissette Drive, Springfield, VA 22152; and must be filed no later than May 24, 2010.

Dated: March 16, 2010.

Joseph T. Rannazzisi,

Deputy Assistant Administrator, Office of Diversion Control, Drug Enforcement Administration.

[FR Doc. 2010–6420 Filed 3–23–10; 8:45 am]

BILLING CODE 4410–09–P

DEPARTMENT OF JUSTICE

Drug Enforcement Administration

Manufacturer of Controlled Substances; Notice of Application

Pursuant to § 1301.33(a) of Title 21 of the Code of Federal Regulations (CFR), this is notice that on December 4, 2009, Sigma Aldrich Research Biochemicals, Inc., 1–3 Strathmore Road, Natick, Massachusetts 01760–2447, made application by renewal to the Drug Enforcement Administration (DEA) as a bulk manufacturer of the basic classes of controlled substances in schedules I and II:

Drug	Schedule
Cathinone (1235)	I
Methcathinone (1237)	I
Aminorex (1585)	I
Alpha-ethyltryptamine (7249)	I
Lysergic acid diethylamide (7315)	I
Tetrahydrocannabinols (7370)	I
4-Bromo-2,5-dimethoxyamphetamine (7391).	I
4-Bromo-2,5-dimethoxyphenethylamine (7392).	I
2,5-Dimethoxyamphetamine (7396).	I
3,4-Methylenedioxyamphetamine (7400).	I
N-Hydroxy-3,4-methylenedioxyamphetamine (7402).	I
3,4-Methylenedioxy-N-ethylamphetamine (7404).	I
3,4-Methylenedioxymethamphetamine (MDMA) (7405).	I
Psilocybin (7437)	I
5-Methoxy-N,N-diisopropyltryptamine (7439).	I
1-[1-(2-Thienyl)cyclohexyl]piperidine (TCP) (7470).	I
N-Benzylpiperazine (BZP) (7493)	I
Heroin (9200)	I
Normorphine (9313)	I
Amphetamine (1100)	II
Methamphetamine (1105)	II
Nabilone (7379)	II
1-Phenylcyclohexylamine (7460)	II
Phencyclidine (7471)	II
Cocaine (9041	II
Codeine (9050)	II
Diprenorphine (9058)	II
Ecgonine (9180)	II
Levomethorphan (9210)	II
Levorphanol (9220)	II
Meperidine (9230)	II
Metazocine (9240)	II
Methadone (9250)	II
Morphine (9300).	
II Thebaine (9333)	II
Levo-alphacetylmethadol (9648)	II
Remifentanil (9739)	II
Carfentanil (9743)	II
Fentanyl (9801)	II

The company plans to manufacture reference standards.

Any other such applicant, and any person who is presently registered with DEA to manufacture such a substance, may file comments or objections to the issuance of the proposed registration pursuant to 21 CFR 1301.33(a).

Any such written comments or objections should be addressed, in quintuplicate, to the Drug Enforcement Administration, Office of Diversion Control, Federal Register Representative (ODL), 8701 Morrissette Drive, Springfield, VA 22152; and must be filed no later than May 24, 2010.

Dated: March 16, 2010.

Joseph T. Rannazzisi,

Deputy Assistant Administrator, Office of Diversion Control, Drug Enforcement Administration.

[FR Doc. 2010–6415 Filed 3–23–10; 8:45 am]

BILLING CODE 4410–09–P

DEPARTMENT OF JUSTICE

Drug Enforcement Administration

Manufacturer of Controlled Substances; Notice of Application

Pursuant to § 1301.33(a), Title 21 of the Code of Federal Regulations (CFR), this is notice that on December 8, 2009, Archimica, Inc., 2460 W. Bennett Street, Springfield, Missouri 65807–1229, made application by letter to the Drug Enforcement Administration (DEA) to be registered as a bulk manufacturer of Gamma Hydroxybutyric Acid (2010), a basic class of controlled substance listed in schedule I.

The company plans to manufacture the listed controlled substance in bulk for sale to its customers.

Any other such applicant, and any person who is presently registered with DEA to manufacture such substances, may file comments or objections to the issuance of the proposed registration pursuant to 21 CFR 1301.33(a).

Any such comments or objections should be addressed, in quintuplicate, to the Drug Enforcement Administration, Office of Diversion Control, Federal Register Representative (ODL), 8701 Morrissette Drive, Springfield, Virginia 22152; and must be filed no later than May 24, 2010.

Dated: March 16, 2010.

Joseph T. Rannazzisi,

Deputy Assistant Administrator, Office of Diversion Control, Drug Enforcement Administration.

[FR Doc. 2010–6442 Filed 3–23–10; 8:45 am]

BILLING CODE 4410–09–P

DEPARTMENT OF JUSTICE

Antitrust Division

Notice Pursuant to the National Cooperative Research and Production Act of 1993—Joint Venture To Perform Project Entitled Robotic Rehabilitation of Aging Water Pipelines

Notice is hereby given that, on February 3, 2010, pursuant to Section 6(a) of the National Cooperative Research and Production Act of 1993, 15 U.S.C. 4301 *et sect.* ("the Act"), Joint

Venture to Perform Project Entitled Robotic Rehabilitation of Aging Water Pipelines ("Robotic Rehabilitation of Aging Water Pipelines") has filed written notifications simultaneously with the Attorney General and the Federal Trade Commission disclosing (1) the identities of the parties to the venture and (2) the nature and objectives of the venture. The notifications were filed for the purpose of invoking the Act's provisions limiting the recovery of antitrust plaintiffs to actual damages under specified circumstances.

Pursuant to Section 6(b) of the Act, the identities of the parties to the venture are: Fibrwrap Construction, Inc., Ontario, CA; Fyfe Company, LLC, San Diego, CA; and the University of California-Irvine, Irvine, CA. The general area of Robotic Rehabilitation of Aging Water Pipelines's planned activity is to develop a prototype robot to apply high-performance, low-cost carbon fiber reinforcement inside water transmission pipes, allowing trenchless repair and rehabilitation of aging pipelines.

Patricia A. Brink,

Deputy Director of Operations Antitrust Division.

[FR Doc. 2010–6274 Filed 3–23–10; 8:45 am]

BILLING CODE M

DEPARTMENT OF JUSTICE

Antitrust Division

Notice Pursuant to the National Cooperative Research and Production Act of 1993—Cooperative Research Group On: Diesel After Treatment Accelerated Aging Cycles—Heavy Duty

Notice is hereby given that, on February 23, 2010, pursuant to Section 6(a) of the National Cooperative Research and Production Act of 1993, 15 U.S.C. 4301 *et seq.* ("the Act"), Southwest Research Institute—Cooperative Research Group on Diesel After Treatment Accelerated Aging Cycles—Heavy-Duty ("DAAAC–HD") has filed written notifications simultaneously with the Attorney General and the Federal Trade Commission disclosing changes in its membership. The notifications were filed for the purpose of extending the Act's provisions limiting the recovery of antitrust plaintiffs to actual damages under specified circumstances. Specifically, Caterpillar Inc., Peoria, IL has been added as a party to this venture.

No other changes have been made in either the membership or planned activity of the group research project. Membership in this group remains open, and DAAAC–HD intends to file additional written notifications disclosing all changes in membership.

On February 2, 2009, DAAAC–HD filed its original notification pursuant to Section 6(a) of the Act. The Department of Justice published a notice in the **Federal Register** pursuant to Section 6(b) of the Act on February 2, 2009 (74 FR 8813).

Patricia A. Brink,

Deputy Director of Operations, Antitrust Division.

[FR Doc. 2010–6270 Filed 3–23–10; 8:45 am]

BILLING CODE M

DEPARTMENT OF JUSTICE

Antitrust Division

Notice Pursuant to The National Cooperative Research and Production Act of 1993—American Society of Mechanical Engineers

Notice is hereby given that, on February 25, 2010, pursuant to Section 6(a) of the National Cooperative Research and Production Act of 1993, 15 U.S.C. 4301 *et seq.*. ("the Act"), the American Society of Mechanical Engineers ("ASME") has filed written notifications simultaneously with the Attorney General and the Federal Trade Commission disclosing additions or changes to its standards development activities. The notifications were filed for the purpose of extending the Act's provisions limiting the recovery of antitrust plaintiffs to actual damages under specified circumstances. Specifically, since November 11, 2009, ASME has published six new standards, initiated three new standards activities, and withdrawn two standards within the general nature and scope of ASME's standards development activities, as specified in its original notification. More detail regarding these changes can be found at *www.asme.org.*

On September 15, 2004, ASME filed its original notification pursuant to Section 6(a) of the Act. The Department of Justice published a notice in the **Federal Register** pursuant to Section 6(b) of the Act on October 13, 2004 (69 FR 60895).

The last notification was filed with the Department on November 13, 2009. A notice was published in the **Federal Register** pursuant to Section 6(b) of the Act on December 9, 2009 (74 FR 65156).

Patricia A. Brink,

Deputy Director of Operations, Antitrust Division.

[FR Doc. 2010–6269 Filed 3–23–10; 8:45 am]

BILLING CODE M

DEPARTMENT OF JUSTICE

Antitrust Division

Notice Pursuant to the National Cooperative Research and Production Act of 1993—IMS Global Learning Consortium, Inc.

Notice is hereby given that, on February 16, 2010, pursuant to section 6(a) of the National Cooperative Research and Production Act of 1993, 15 U.S.C. 4301 *et seq.* ("the Act"), IMS Global Learning Consortium Inc. has filed written notifications simultaneously with the Attorney General and the Federal Trade Commission disclosing changes in its membership. The notifications were filed for the purpose of extending the Act's provisions limiting the recovery of antitrust plaintiffs to actual damages under specified circumstances. Specifically, Sigong Media, Seoul, REPUBLIC OF KOREA; SungKyunKwan University, Suwan, Gyeonggi—do, REPUBLIC OF KOREA; State University of New York at Delhi, Delhi, NY; Texas A&M—Commerce, Commerce, TX; and Touro University Worldwide, Westlake Village, CA have been added as parties to this venture.

Also, LearnGauge, LLC, Okemos, MI; Inigral, Inc., San Francisco, CA; Norwegian Secretariat for Standardization Learning Technology (NSSL), Blindern, Oslo, NORWAY; and Levelland Independent School District, Levelland, TX have withdrawn as parties to this venture.

No other changes have been made in either the membership or planned activity of the group research project. Membership in this group research project remains open, and IMS Global Learning Consortium Inc. intends to file additional written notifications disclosing all changes in membership.

On April 7, 2000, IMS Global Learning Consortium Inc. filed its original notification pursuant to section 6(a) of the Act. The Department of Justice published a notice in the **Federal Register** pursuant to section 6(b) of the Act on September 13, 2000 (65 FR 55283).

The last notification was filed with the Department on December 1, 2009. A notice was published in the **Federal**

Register pursuant to section 6(b) of the Act on December 21, 2009 (74 FR 67903).

Patricia A. Brink,

Deputy Director of Operations, Antitrust Division.

[FR Doc. 2010–6268 Filed 3–23–10; 8:45 am]

BILLING CODE 4410–11–M

DEPARTMENT OF JUSTICE

Antitrust Division

Notice Pursuant to the National Cooperative Research and Production Act of 1993—Joint Venture Under Tip Award No. 70NANB10H014 To Perform Project Entitled: Automated Nondestructive Evaluation and Rehabilitation System (ANDERS) for Bridge Decks

Notice is hereby given that, on January 28, 2010, pursuant to Section 6(a) of the National Cooperative Research and Production Act of 1993, 15 U.S.C. 4301 *et seq.* (the Act"), the Joint Venture under TIP Award No. 70NANB10H014 to Perform Project Entitled: Automated Nondestructive Evaluation and Rehabilitation System ("ANDERS") for Bridge Decks has filed written notifications simultaneously with the Attorney General and the Federal Trade Commission disclosing (1) the identities of the parties to the venture and (2) the nature and objectives of the venture. The notifications were filed for the purpose of invoking the Act's provisions limiting the recovery of antitrust plaintiffs to actual damages under specified circumstances.

Pursuant to Section 6(b) of the Act, the identities of the parties to the venture are: Rutgers, the State University of New Jersey, New Brunswick, NJ; Drexel University, Philadelphia, PA; PD–LD, INC., Pennington, NJ; Mala GeoScience USA, Inc., Charleston, SC; and Pennoni Associates Inc., Philadelphia, PA. The general area of ANDERS' planned activity is to provide a uniquely comprehensive tool that will transform the manner in which bridge decks are assessed and rehabilitated, and to provide a unique tool that enables the sustainable management of aging bridge stock through (1) a much higher evaluation detail and comprehensiveness of detection at an early stage 2 deterioration for far less cost and time than traditional approaches or fragmented NDE, (2) comprehensive condition and structural assessment (including the understanding of effects of local deterioration on global performance) at all stages of deterioration, and (3) integrated assessment and rehabilitation that will be nondestructive, rapid, cost effective and implementable at all stages of deterioration.

Patricia A. Brink,

Deputy Director of Operations, Antitrust Division.

[FR Doc. 2010–6260 Filed 3–23–10; 8:45 am]

BILLING CODE 4410–11–M

DEPARTMENT OF JUSTICE

Antitrust Division

Notice Pursuant to the National Cooperative Research and Production Act of 1993—Cooperative Research Group on High-Efficiency Dilute Gasoline Engine II

Notice is hereby given that, on February 18, 2010, pursuant to section 6(a) of the National Cooperative Research and Production Act of 1993, 15 U.S.C. 4301 *et seq.* ("the Act"), Southwest Research Institute—Cooperative Research Group on High-Efficiency Dilute Gasoline Engine II ("HEDGE II") has filed written notifications simultaneously with the Attorney General and the Federal Trade Commission disclosing changes in its membership. The notifications were filed for the purpose of extending the Act's provisions limiting the recovery of antitrust plaintiffs to actual damages under specified circumstances. Specifically, Ford Motor Company, Dearborn, MI; Valeo Systemes de Controle Moteur, Cergy Pontoise, FRANCE; and Navistar, Melrose Park, IL have been added as parties to this venture.

No other changes have been made in either the membership or planned activity of the group research project. Membership in this group research project remains open, and HEDGE II intends to file additional written notifications disclosing all changes in membership.

On February 19, 2009, HEDGE II filed its original notification pursuant to section 6(a) of the Act. The Department of Justice published a notice in the **Federal Register** pursuant to section 6(b) of the Act on April 2, 2009 (74 FR 15003).

The last notification was filed with the Department of Justice on December 10, 2009. A notice was published in the **Federal Register** pursuant to section 6(b) of the Act on January 27, 2010 (75 FR 4423).

Patricia A. Brink,

Deputy Director of Operations, Antitrust Division.

[FR Doc. 2010–6257 Filed 3–23–10; 8:45 am]

BILLING CODE 4410–11–M

DEPARTMENT OF LABOR

Employee Benefits Security Administration

[Prohibited Transaction Exemption 2010–08; Exemption Application No. L–11575]

Grant of Individual Exemption Involving Ford Motor Company, Located in Detroit, MI

AGENCY: Employee Benefits Security Administration, U.S. Department of Labor.

ACTION: Grant of individual exemption.

This document contains a final exemption issued by the Department of Labor (the Department) from certain prohibited transaction restrictions of the Employee Retirement Income Security Act of 1974 (the Act or ERISA). The transactions involve the UAW Ford Retirees Medical Benefits Plan (the Ford VEBA Plan) and its funding vehicle, the UAW Retiree Medical Benefits Trust (the VEBA Trust), (collectively the VEBA).[1]

DATES: *Effective Date:* This exemption is effective as of December 31, 2009.

FOR FURTHER INFORMATION CONTACT: Warren Blinder, Office of Exemption Determinations, Employee Benefits Security Administration, U.S. Department of Labor, telephone (202) 693–8553. (This is not a toll-free number.)

SUPPLEMENTARY INFORMATION: On December 8, 2009, the Department published a notice of proposed individual exemption in the **Federal Register** at 74 FR 64716 from the restrictions of sections 406(a)(1)(A), 406(a)(1)(B), 406(a)(1)(D), 406(a)(1)(E), 406(a)(2), 406(b)(1), 406(b)(2), and 407(a) of ERISA. The proposed exemption was requested in an application filed by the Ford Motor Company (Ford or the Applicant) pursuant to section 408(a) of ERISA and in accordance with the procedures set forth in 29 CFR 2570, Subpart B (55 FR

[1] Because the Ford VEBA Plan will not be qualified under section 401 of the Internal Revenue Code of 1986, as amended (the Code), there is no jurisdiction under Title II of the Act pursuant to section 4975 of the Code. However, there is jurisdiction under Title I of the Act.

32836, August 10, 1990). Effective December 31, 1978, section 102 of Reorganization Plan No. 4 of 1978, (43 FR 47713, October 17, 1978) transferred the authority of the Secretary of the Treasury to issue exemptions of the type requested to the Secretary of Labor. Accordingly, this final exemption is being issued solely by the Department.

Background

On February 13, 2006, Ford and the International Union, United Automobile, Aerospace and Agricultural Implement Workers of America (the UAW) and a class of Ford retirees entered into a settlement agreement (the Hardwick I Settlement Agreement) in the case of *Int'l Union, UAW, et al.* v. *Ford Motor Company,* Civil Action No. 05–74730, 2006 WL 1984363 (E.D. Mich. July 13, 2006). The case was brought to contest whether Ford had the right to unilaterally modify hourly retiree welfare benefits for hourly retirees who had been represented by the UAW. Under the terms of the Hardwick I Settlement Agreement, benefits provided under a new plan were to be paid from a voluntary employees' beneficiary association (the Mitigation VEBA) controlled by a committee independent of Ford. The Mitigation VEBA was to be funded by Ford through cash and other payments, and by contributions from active Ford employees through wage deferrals and the diversion of cost-of-living adjustments.

In light of deteriorating global economic conditions and the significant impact on Ford's financial health by retiree health care funding obligations, in 2007 Ford announced its intention to terminate retiree health care coverage for UAW represented employees and retirees and its plan to terminate the Hardwick I Settlement Agreement, effective in 2011. As a result, on November 9, 2007, the UAW and a class of retirees (the 2007 Class) filed suit against Ford in the United States District Court for the Eastern District of Michigan (the District Court), challenging Ford's unilateral right to alter retiree health benefits and asserting that such benefits were vested. See *Int'l Union, UAW, et al.* v. *Ford Motor Company,* Civil Action No. 07–14845, 2008 WL 4104329 (E.D. Mich. Aug. 29, 2008).

Following a series of negotiations, Ford and the UAW agreed to a proposed settlement (the Hardwick II 2008 Settlement Agreement, otherwise referred to as the 2008 Settlement Agreement), under which Ford's obligations for providing post-retirement medical benefits to the 2007 Class and a group of Ford active employees eligible for retiree benefits (the 2007 Covered Group) would be terminated and the Ford VEBA Plan would be established and maintained by an independent committee (the Committee).[2] Pursuant to the 2008 Settlement Agreement, the Ford VEBA Plan would be funded by the VEBA Trust, which would be responsible for the payment of post-retirement medical benefits to members of the 2007 Class and the 2007 Covered Group. Furthermore, under the terms of the 2008 Settlement Agreement, coverage and operations for the Ford VEBA Plan would commence on the day following the "Implementation Date," or January 1, 2010. Ford also agreed to transfer assets to the VEBA Trust on behalf of the Ford VEBA Plan with an estimated worth of $13.2 billion, based on a present value as of December 31, 2007.

On July 23, 2009, Ford, the UAW, and Class Counsel entered into an agreement to amend the 2008 Settlement Agreement (the Amendment Agreement) by providing, *inter alia,* that Ford could use Ford common stock (Ford Common Stock) to pay up to approximately 50% of certain future obligations to the VEBA Trust on behalf of the Ford VEBA Plan. The revised settlement agreement (the 2009 Settlement Agreement) took effect on November 9, 2009, upon the District Court's issuance of an "Order and Final Judgment" granting approval to the Amendment Agreement, including approval of the amendment to the trust agreement for the VEBA Trust and certification of the class under the modified class definition.[3]

The 2009 Settlement Agreement obligates Ford to contribute to the VEBA Trust, on behalf of the Ford VEBA Plan, the following deposits or remittances: (a) The balance in a temporary asset account created under the 2008 Settlement Agreement (the TAA) as of the date of transfer or, at Ford's discretion, cash in lieu of some or all of the investments in the TAA, (b) two promissory notes issued by Ford in an aggregate principal amount of $13.2 billion (New Note A and New Note B, and collectively, the New Notes), (c) warrants to acquire 362,391,305 shares of Ford Common Stock, at a par value of $.01 and at a strike price of $9.20 per share (the Warrants), and (d) any shares of Ford Common Stock transferred by Ford in settlement of its payment obligation under New Note B (Payment Shares). In addition, Ford is obligated to direct the trustee of the Existing Internal VEBA (as defined below) to transfer to the VEBA Trust all assets in the Existing Internal VEBA or cash in an amount equal to the Existing Internal VEBA balance on the date of transfer. Furthermore, the District Court's Order and Final Judgment directed the committee of the Mitigation VEBA, or the trustee of the Mitigation VEBA, to transfer the assets of such plan to the VEBA Trust.

Written Comments

The Department invited all interested persons to submit written comments and/or requests for a public hearing with respect to the notice of proposed exemption on or before January 21, 2010. During the comment period, the Department received three (3) telephone inquiries and thirteen (13) written comments from interested persons on the proposed exemption. Of the written comments received, ten (10) were submitted by participants in the Ford VEBA Plan. Ford, counsel for the Committee, and Independent Fiduciary Services (IFS), the independent fiduciary for the Ford VEBA Plan (the Independent Fiduciary), submitted the remaining comments. The Department received no hearing requests during the comment period.

Several of the written comments and callers supported the adoption of the exemption. In this regard, the UAW, along with Class Counsel, reviewed Ford's application for exemption and expressed support for the application and stated their belief that the transactions which are the subject of the exemption are in the best interest of the Ford VEBA Plan's participants and beneficiaries. Furthermore, the Department received written comments from Ford, the Committee, and IFS, which supported the exemption and requested certain modifications and/or clarifications regarding the exemption.

Following is a discussion of the aforementioned comments, including the responses made by Ford or the Department to address the issues raised therein.

Participant Comments

The telephone inquiries received by the Department from participants in the Ford VEBA Plan related primarily to the commenters' difficulty in understanding the notice of proposed exemption or the effect of the exemption on the commenters' benefits, including a concern that the 2009 Settlement Agreement was too advantageous to Ford and would not ensure that benefit levels would remain affordable for all retirees.

[2] See *Ford Motor Co.,* 2008 WL 4104329.

[3] See *Int'l Union, UAW, et al.* v. *Ford Motor Company,* Civil Action No. 07–14845, (E.D. Mich. Nov. 9, 2009) (Doc. # 71, Order and Final J.).

With respect to the written comments received by the Department from Ford VEBA Plan participants, the majority of commenters neither supported nor opposed the exemption but instead raised other concerns which were beyond the scope of the exemption. Such comments related to the perceived unfair treatment of retirees within the UAW; lack of bargaining power of retirees in the settlement negotiation process between Ford, the UAW, and Class Counsel; and concerns about the rising costs of maintaining healthcare coverage under the Ford VEBA Plan. However, several commenters did raise concerns that were relevant to the Department's consideration of the final exemption.

One commenter questioned whether, when Ford returns to profitability, participants in the Ford VEBA Plan would benefit from any increase in the health benefits of active UAW members that may be earned as a result of negotiations between the UAW and Ford with respect to future labor contracts. A second commenter was concerned that the amount of employer securities contributed by Ford to the VEBA Trust was "inherently insecure and unstable," in light of the volatility in the stock markets. The commenter also asked whether Ford would provide additional funding to the Ford VEBA Plan if the fair market value of Ford Common Stock declines, and what else Ford had done to ensure that the securities will maintain their value.

Ford's Response to Participant Comments

In responding to both of the commenters' concerns, Ford initially observes that the funding of the VEBA Trust was not unilaterally determined by Ford, but rather was the product of a prolonged and intense negotiation among Ford, the UAW (representing active employees), and Class Counsel (representing retirees). Ford contends that, although no party got everything it wanted, all three parties were ultimately satisfied that the 2009 Settlement Agreement was the best one that they could achieve under the circumstances. Otherwise, Ford points out that no agreement would have been reached. As Ford notes, the 2009 Settlement Agreement was also approved by a Federal court, which had to satisfy itself that the 2009 Settlement Agreement was fair, reasonable, and adequate, and was in the best interests of the retiree Class.

In responding to the first commenter's concerns, Ford contends that the fundamental deal reached by the parties is that Ford will make the payments specified by the 2009 Settlement Agreement at the times specified by the agreement, to an independent VEBA (*i.e.,* the VEBA Trust) over which it has no authority. Ford notes that, in exchange, its obligation to pay for retiree health care is extinguished, and instead, the VEBA Trust will establish and administer a welfare plan that will provide Ford retirees with health care benefits.

Ford explains that under this structure, the health care benefits to be provided to retirees by the VEBA Trust are completely separate from the health care benefits to be provided to active employees by Ford. Neither Ford nor the UAW has the ability to adjust retiree health benefits. Rather, notes Ford, retiree health benefits are set by the Committee of the VEBA Trust in the interest of present and future retirees within the Covered Group whose health care will be funded by the VEBA Trust. Ford explains that, if Ford and the UAW were to agree on improved benefits for active employees, the Committee could consider increasing benefit levels, but would not have to do so.

In sum, Ford represents that its responsibility is to provide no more or no less than the agreed-upon funding for the VEBA Trust. Ford remarks that, what the Committee of the Ford VEBA Plan does with those funds, including how much health care coverage to provide for retirees, is a matter for the Committee to decide, and not Ford.

In responding to the second commenter, Ford explains that, as a condition of agreeing to accept employer securities in lieu of cash, the UAW and Class Counsel negotiated a number of provisions designed to protect the VEBA Trust. Ford notes that, for example, the VEBA Trust is provided with "registration rights," to aid the Independent Fiduciary in divesting the Ford securities that are paid into the VEBA Trust. In addition, Ford makes it clear that the 2009 Settlement Agreement sets forth several specific conditions under which Ford is prevented from exercising its option to make contributions in Ford Common Stock.

Moreover, Ford explains that its option to contribute securities instead of cash is itself a form of protection for the VEBA Trust. As Ford notes, its continued commercial viability is necessary to ensure that the VEBA Trust is fully funded. Ford asserts that permitting it to make contributions in Ford Common Stock rather than cash gives Ford the flexibility to avoid cash payments in low liquidity environments. Moreover, Ford maintains that it is not in anyone's interest to compel a payment that pushes Ford into insolvency, thereby jeopardizing the New VEBA's funding going forward.

With respect to the second commenter's concern regarding market volatility, Ford notes that its option to contribute shares of Ford Common Stock does not have a fixed share price, but rather fluctuates with the market. Ford explains that, specifically, it must pay the number of shares equal in value to the amount of the cash payment it was obligated to make, calculated using a share price derived from an average of recent market prices. If Ford's share price is down, observes Ford, it must pay proportionally more shares of Ford Common Stock to the VEBA Trust to satisfy its payment obligation. According to Ford, the Independent Fiduciary can then assess the market—acting solely in the interest of the VEBA Trust (and thus, of retirees)—to determine whether to continue to hold Ford Common Stock, thereby giving the VEBA Trust the advantage of any appreciation, or whether to sell it, using the registration rights noted above.

Ford reiterates that it will pay what it is obligated to do so under the 2009 Settlement Agreement, and whether that obligation is settled in more or fewer securities is a function of Ford's market price. Ford notes that it does not have an obligation to "true-up" the Ford VEBA Plan. If, for example, the price of Ford Common Stock falls before the VEBA Trust disposes of the securities, Ford explains that the parties have agreed that the other rights possessed by the VEBA Trust and the Independent Fiduciary are sufficient to protect the VEBA Trust. In addition, Ford notes that it is paying $25 million extra under New Note A in each year where there is a payment date under New Note B. Ford maintains that this additional amount was designed to compensate the VEBA Trust for any costs in selling shares of Ford Common Stock and for any short term risk of stock price volatility.

In sum, Ford represents that it, the UAW, and the Class Counsel, on behalf of retirees, agreed that giving Ford the option to pay part of its payment obligation to the VEBA Trust with employer securities was in the long term interest of the VEBA Trust, Ford retirees, and Ford, given the protections that were put in place to protect the VEBA Trust from downside risk.

Ford's Comment

The Department also received a written comment from Ford, which provides factual corrections and supplemental information regarding the 2009 Settlement Agreement and events occurring after the date on which the

proposed exemption was published in the **Federal Register**. The comment also requests the modification of certain operative language of the proposed exemption. Furthermore, Ford's comment requests the Department's confirmation relating to the party in interest status of the Existing Internal VEBA and modifications regarding the duties and responsibilities of the Committee and the Independent Fiduciary.

A. Supplemental Information Regarding Implementation of the 2009 Settlement Agreement

1. *Name Change of the LLC.* Ford represents that, on December 1, 2009, the name of its wholly-owned limited liability company, "Ford-UAW Holdings LLC" (the LLC), was changed to "VEBA–F Holdings LLC." As is described in Representation 8, on pages 64720—64721 of the Summary of Facts and Representations of the proposed exemption (the Representations, and each individually, a Representation), Ford established the LLC to hold the assets in the TAA, the New Notes, the Warrants, and any Payment Shares transferred by Ford in settlement of its first payment obligation under New Note B. Under the 2009 Settlement Agreement, Ford had the option to transfer its wholly owned interest in the LLC (the LLC Interest) to the VEBA Trust in lieu of transferring the assets inside the LLC. According to Ford, the name was changed in advance of Ford's transfer of the LLC Interest to the VEBA Trust on behalf of the Ford VEBA Plan because Ford's trademark policy prohibits Ford from transferring an entity with "Ford" in its name to an unaffiliated party.

2. *Execution of Agreements and Exchange of Notes.* As described in Representation 9, on page 64721 of the proposed exemption, the 2009 Settlement Agreement provides that the "Term Note," [4] "Convertible Note," [5] "TAA Note" [6] and the right to future "Base Amount Payments," [7] will be exchanged for the New Notes and Warrants, in accordance with the terms of the Security Exchange Agreement (the Exchange Agreement) among Ford, certain subsidiary guarantors, and the LLC.[8]

Ford represents that, on December 11, 2009, Ford, the LLC, and certain subsidiary guarantors entered into the Exchange Agreement. On the same date, Ford and the LLC also entered into the Securityholder and Registration Rights Agreement, and Ford and ComputerShare Trust Company N.A. (Ford's transfer agent) entered into an agreement (the Warrant Agreement) to effect the transfer of the Warrants to the VEBA Trust. In accordance with the 2009 Settlement Agreement and the Exchange Agreement, Ford issued New Note A, New Note B, certain guaranties, and the Warrants to the LLC on December 31, 2009 in exchange for the Convertible Note, the Term Note, and the TAA Note. Upon the exchange, the Convertible Note, the Term Note, and the TAA Note were cancelled. The Department notes the foregoing updates and additional representations.

3. *Payments Under New Note A and New Note B.* On page 64721 of the proposed exemption, Representation 9 describes the payment schedule under the New Notes which Ford is obligated to follow unless Ford elects to prepay the amounts due thereunder. Ford represents that, on December 31, 2009, with respect to New Note A, it paid to the LLC the payment due on that date of $1,268,470,000, the payment of an estimated "True-Up Amount" of $150,000,000,[9] and a partial prepayment of New Note A in the amount of $500,000,000. Furthermore, Ford represents that it also paid $609,950,000 in cash to the LLC on December 31, 2009 in accordance with the terms of New Note B.

According to Ford, it determined to make the $500,000,000 prepayment on New Note A in order to retire some of its most expensive debt, and, as a result, improve its balance sheet. Ford maintains that this prepayment was beneficial to the Ford VEBA Plan, both as a creditor and as a shareholder of Ford.

Consequently, Ford notes that in accordance with the terms of New Note A, described in Representation 10 of the proposed exemption, on page 64722, each future principal payment on New Note A, beginning with the June 30, 2010 payment, will be reduced proportionately to reflect the prepayment made on December 31, 2009. As a result, the payment schedule under the New Notes has been modified as follows to reflect the foregoing payments:

Payment date	Payment of note A	Payment of note B
June 30, 2010	$249.45 million	$609.95 million
June 30, 2011	249.45 million	609.95 million
June 30, 2012	584.06 million	654 million
June 30, 2013	584.06 million	654 million
June 30, 2014	584.06 million	654 million
June 30, 2015	584.06 million	654 million
June 30, 2016	584.06 million	654 million
June 30, 2017	584.06 million	654 million
June 30, 2018	584.06 million	654 million
June 30, 2019	22.36 million	26 million
June 30, 2020	22.36 million	26 million
June 30, 2021	22.36 million	26 million

[4] The Term Note, issued by Ford in April 2008 and due January 1, 2018, was issued in the original principal amount of $3.0 billion and bears 9.50% interest per annum, which is payable semi-annually.

[5] The Convertible Note, issued by Ford in April 2008 and due January 1, 2013, was issued with an aggregate principal amount of $3.3 billion and bears 5.75% interest per annum, which is payable semi-annually.

[6] The TAA Note was issued by Ford to the LLC in late 2008 under the 2008 Settlement Agreement in exchange for a payment of $2.282 billion, the value of the assets in the TAA as of December 31, 2008. The TAA Note had an interest rate of 9% per annum and a maturity date of December 31, 2009.

[7] The Base Amount Payments are annual payments of $52.3 million that Ford is obligated to make for 15 years to the VEBA Trust under the 2008 Settlement Agreement.

[8] Upon the exchange, the aggregate principal amount of the New Notes and the amortization thereof represent the equivalent value of (a) the principal amounts of and interest payments on the Term Note, the Convertible Note and the TAA Note; (b) any unpaid Base Amount Payments; and (c) an additional $25 million per year during the period 2009 through 2018, which is intended to cover transaction costs the Ford VEBA Plan incurs in selling any shares of Ford Common Stock delivered pursuant to Ford's exercise of the stock settlement option under New Note B.

[9] Under the terms of New Note A, Ford is obligated to pay to the LLC a "True-up Amount," calculated according to a formula provided in the TAA Note, to reflect a hypothetical investment return on the TAA assets paid to Ford in exchange for the TAA Note. Based on year-end returns available after December 31, 2009, Ford determined that the final True-Up Amount due under New Note A is $150,000,000.

Payment date	Payment of note A	Payment of note B
June 30, 2022	22.36 million	26 million

4. *Transfer of Certain Assets to the VEBA Trust.* Ford represents that, at the close of business on December 31, 2009, it exercised its right under the 2009 Settlement Agreement, as described in Representation 15.a.(1), on pages 64724–64725 of the proposed exemption, to transfer the LLC Interest to the VEBA Trust in order to satisfy its contractual obligations thereunder. Ford notes that the unaudited fair market value of assets in the TAA Account as of December 31, 2009, excluding New Notes A and B and the Warrants, was $768,716,494.20.

Ford also represents that it caused certain assets of the Existing Internal VEBA to be transferred to the VEBA Trust upon the close of business on December 31, 2009 in satisfaction of its obligations under the 2009 Settlement Agreement, described in Representation 13, on page 64724 of the proposed exemption. Ford notes that the unaudited fair market value of the assets in the Existing Internal VEBA as of December 31, 2009 was $3,517,847,429.91.

Furthermore, Ford represents that, in accordance with the 2009 Settlement Agreement, as described in Representation 15.c.(2) on pages 64726–64727 of the proposed exemption, the Existing Internal VEBA retained $850,000, which may be used for outstanding fees owed by the Existing External VEBA to its investment managers. Ford notes further that after these outstanding expenses are satisfied, any remaining funds will be transferred to the VEBA Trust.

In response to the above referenced comments, the Department has revised the name of the LLC in Section VII(l) of the final exemption. In addition, the Department takes note of the foregoing clarifications and updates to the Representations.

B. Comments on the Summary of Facts and Representations

1. *Factual Corrections.* Ford maintains that certain statements in the Representations attributed to the Applicant are not accurate. Specifically, Ford notes that in Representation 3, the definition of the term "Covered Group" appearing on page 64718 of the proposed exemption in the last sentence of the first full paragraph in the second column, inaccurately states that the 2009 Settlement Agreement expanded the members included in the definition of the 2007 Covered Group. Instead, according to Ford, the definition of the "Covered Group" reduced the number of members in the 2007 Covered Group as certain of these members retired since the 2008 Settlement Agreement and became members of the expanded Class.

In addition, Ford suggests that, on page 64721 of the proposed exemption, in Representation 9, the amortization schedule for New Note A should have included the "True-Up Amount" that was due on December 31, 2009. As noted above, the final True-Up Amount was calculated to be $150,000,000 and paid by Ford to the LLC on December 31, 2009.

In response to these comments, the Department takes note of the foregoing clarifications and updates to the Representations.

2. *Status of Existing Internal VEBA as a "Party in Interest".* As described on page 64724 of the proposed exemption, in Representation 13, the Existing Internal VEBA was the subaccount of the Ford-UAW Benefits Trust previously maintained by Ford as a source of funding for retiree health care expenses. As of December 31, 2008, the Existing Internal VEBA had an estimated asset value of approximately $2.7 billion. Until the Existing Internal VEBA's assets were transferred to the VEBA Trust, the assets were invested in a manner consistent with its investment policy.

As described above, on December 31, 2009, Ford directed the trustee of the Existing Internal VEBA to transfer to the VEBA Trust all assets in the Existing Internal VEBA or cash in an amount equal to the Existing Internal VEBA balance on the date of the transfer. The Existing Internal VEBA retained an amount equal to the Existing Internal VEBA's share of expenses (to the extent permitted by ERISA) subject to reconciliation with actual expenses incurred.

In its exemption application, Ford stated that it believed that any deposits, remittances or asset transfers between the VEBA Trust and the Existing Internal VEBA do not implicate any prohibited transactions under section 406(a) of ERISA because the Existing Internal VEBA is not a "party in interest" as defined under section 3(14) of ERISA, with respect to the Ford VEBA Plan. The VEBA Trust and the Ford VEBA Plan were established by the UAW Ford Retirees Employees' Beneficiary Association (the Ford EBA), an employees' beneficiary organization within the meaning of section 3(4) of ERISA, acting through the Committee.

Ford requests that the Department confirm that the Existing Internal VEBA was not a "party in interest" with respect to the Ford VEBA Plan at the time the trustee of the Existing Internal VEBA transferred assets to the VEBA Trust in accordance with the terms of the 2009 Settlement Agreement based on its analysis of section 3(14) of ERISA. In this regard, Ford explains that the Existing Internal VEBA was a "voluntary employees' beneficiary association" and a tax-exempt trust authorized by section 501(c)(9) of the Code. Ford also explains that the Existing Internal VEBA was governed by the Ford-UAW Benefits Trust Master Trust Agreement between Ford Motor Company and The Northern Trust Company and that the Existing Internal VEBA is managed by the Asset Management department of Ford Motor Company through various third party managers. In addition, Ford examined the party in interest provisions under section 3(14) of ERISA and concludes that the Existing Internal VEBA and the Ford VEBA Plan would not fit any of the party in interest relationships that are described therein with respect to each other.

Based upon Ford's representations that neither VEBA was a fiduciary or service provider to the other or is otherwise described in any of the other categories of party in interest under section 3(14) of ERISA, the Department is of the view that neither the Existing Internal VEBA nor the Ford VEBA Plan is a party in interest with respect to each other. Based upon Ford's representations, the transfer of assets from the Existing Internal VEBA to the Ford VEBA Plan was not a prohibited sale, exchange or transfer of assets between a plan and a party in interest under section 406(a) of ERISA.

C. Comments on the Operative Language

1. *Covered Transactions.* On page 64730 of the proposed exemption, Section I(b) provides exemptive relief for the sale of Ford Common Stock held by the Ford VEBA Plan to Ford in accordance with the Right of First Offer or a Ford self-tender under the Securityholder and Registration Rights Agreement. However, Ford notes that the Securityholder and Registration Rights Agreement provides that Ford

may purchase Payment Shares or *Warrants,* that the VEBA Trust intends to transfer to third parties in accordance with the Right of First Offer or a Ford self-tender. Moreover, Representation 12.c of the proposed exemption, on page 64724, also states that the Right of First Offer applies to "Warrants, Payment Shares or shares of Ford Common Stock received upon the exercise of all or a portion of the Warrants."

To ensure that the final exemption aligns with the description in the Representations, as well as with the substantive underlying documents themselves, Ford requests that Section I(b) of the proposed exemption be revised as follows:

> If the exemption is granted, the restrictions of sections 406(a)(1)(A), 406(b)(1), and 406(b)(2) of ERISA shall not apply, effective December 31, 2009, to the sale of Ford Common Stock or Warrants held by the Ford VEBA Plan to Ford in accordance with the Right of First Offer or a Ford self-tender under the Securityholder and Registration Rights Agreement.

The Department acknowledges the fact that Warrants were inadvertently excluded from Section I(b) of the proposed exemption. As such, the Department concurs with Ford's requests to modify Section I(b), and conforming changes have been made to the final exemption.

2. *Definitions.* Ford suggests that certain definitions should be added to Section VII of the final exemption or modified for clarity and to reflect the occurrence of certain events prescribed by the 2009 Settlement Agreement. Specifically, Ford suggests that the following definition for "Payment Shares" be added in the final exemption to the Definitions in Section VII, because the term is not defined and it is an element of the previously defined term "Securities":

> The term "Payment Shares" means any shares of Ford Common Stock issued by Ford to satisfy all or a portion of its payment obligation under New Note B, subject to the terms and conditions specified in New Note B.

Ford also requests that the following definitions in Section VII be modified in the final exemption to correct the effective dates, and updated to reflect recent events described in Section A above:

> The term "Exchange Agreement" means the Security Exchange Agreement among Ford, the subsidiary guarantors listed in Schedule I thereto, and the LLC, dated as of December 11, 2009.
>
> The term "LLC" means the Ford-UAW Holdings LLC, established by Ford as a wholly-owned LLC, and subsequently renamed VEBA–F Holdings LLC, established to hold the assets in the TAA and certain other assets required to be contributed to the VEBA under the 2008 Settlement Agreement, as amended by the 2009 Settlement Agreement.
>
> The term "Securityholder and Registration Rights Agreement" means the Securityholder and Registration Rights Agreement by and among Ford and the LLC, dated as of December 11, 2009.

The Department concurs with the above referenced additions and modifications to Section VII of the proposed exemption, and it has made conforming changes to the final exemption.

3. *Conditions.* Ford notes that on pages 64730—64731 of the proposed exemption, Section II provides "Conditions Applicable to Section I(a) and I(b)" that relate to the duties and responsibilities of the Committee and the Independent Fiduciary. Ford requests that, to the extent the parallel conditions proposed in both General Motor Corporation's and Chrysler LLC's proposed individual exemptions [10] are substantively modified in a manner affecting Ford's proposed exemption, conforming modifications will be made to the conditions proposed for Ford.

The Department concurs with Ford's request to conform modifications of the operative language in Section II of the proposed exemption relating to the functions of the Committee and the Independent Fiduciary.

The Committee's Comment

The Committee submitted a written comment that was supportive of the proposed exemption, and suggests certain modifications to the operative language of the proposed exemption and the Representations. The Committee's comment letter also relates to the respective roles of the Independent Fiduciary and any investment banks retained by the Independent Fiduciary with respect to the Securities held by the VEBA Trust.

A. Modifications to Summary of Facts and Representations

1. *Number of Investment Banks.* As illustrated on page 64718 of the proposed exemption, Representation 4 states that the trust agreement for the VEBA Trust provides for separate retiree accounts designed to segregate payments attributable to GM, Chrysler, and Ford, pursuant to the terms of each company's settlement agreement with the UAW and each respective class (the Separate Retiree Accounts). As described on page 64728 of the proposed exemption, in Representation 16, the Committee represented that, in the event that a single Independent Fiduciary represents two or more Separate Retiree Accounts:

> A separate investment bank will be retained with respect to each of the three plans comprising the VEBA Trust. The investment bank's initial recommendations will be made solely with the goal of maximizing the returns for the single plan that owns the securities for which the investment bank is responsible.

In its initial discussions with the Department, the Committee made the argument that the arrangement for retention of separate investment banks would minimize the likelihood of an immediate transactional conflict inherent wherein one Independent Fiduciary managing more than one Separate Retiree Account would be immediately confronted by the need to dispose of the securities of each company.

The Committee has retained IFS as the Independent Fiduciary with respect to the Securities, and has currently retained separate independent fiduciaries with respect to the GM and Chrysler Separate Retiree Accounts. As noted, however, it is conceivable that at some future date any or all three Independent Fiduciary engagements may be consolidated and the foregoing conditions would then come into play. In such event, the Committee argues that the requirement for different investment banks for each Separate Retiree Account would not be in the interest of the Ford VEBA Plan and would not advance the goal of reducing potential fiduciary conflicts. The Committee contends that the need to retain multiple investment banks should be at the discretion of the Independent Fiduciary and the investment banks themselves, or that such requirement should be limited to investment banks performing a traditional underwriting role and being paid on a transactional basis, not those retained for ongoing valuation or investment consulting services.[11]

[10] See Section II–Conditions Applicable to Section I(a), Notice of Proposed Individual Exemption Involving General Motors Corporation, Located in Detroit, MI, 74 FR 47963, September 18, 2009; Section II–Conditions Applicable to Section I(a), Notice of Proposed Individual Exemption Involving Chrysler LLC, Located in Auburn Hills, MI, 74 FR 51182, October 5, 2009.

[11] The Committee suggests that an investment bank performing valuation or investment consulting and advisory services will often be paid a flat or asset-based fee, while an investment bank performing underwriting and brokerage services will be paid a transaction-based fee as a percentage of the overall sale. Additionally, the Committee notes that it is not anticipated that the Independent Fiduciary likely would retain a separate consulting and advisory firm for day-to-day advice (unless appropriate).

The Committee points out that, as a threshold matter, the term "investment bank" or "investment banker" is not a precise term, but refers to a range of services including investment valuation, investment consulting and advice, and brokerage or underwriting performed under the authority and supervision of one or more regulators (including, but not limited to the Federal Reserve and/or the SEC). The Committee maintains that typically, though not necessarily, an investment bank engaged to provide a regular valuation will not be the same as an investment bank engaged to assist the Independent Fiduciary in connection with a large private sale or an initial public offering, and even in the latter event, different investment banks may be employed for different markets (public versus private, international versus domestic, institutional versus retail).

The Committee suggests that, particularly in the case of an investment bank engaged only to provide valuation or investment advice, the Independent Fiduciary may conclude that there is no potential conflict in retaining a single investment bank with respect to two or more Separate Retiree Accounts. Furthermore, the Committee believes that retaining a single investment bank may in fact provide potential benefits in the form of experience, cost savings, and communication.

The Committee proffers that Ford, Chrysler, and GM are at vastly different stages of marketability, are competing for capital in different markets (including public versus private), and are not competing against each other so much as they are part of a huge global automobile market with many other competitors.[12] The Committee notes that a conflict could arise in the unlikely event that the Independent Fiduciary proposes to sell large blocks of stock of two or more car companies in the same market at the exact same time. In that case, the Committee suggests that the Independent Fiduciary would probably (though not necessarily) engage separate investment bankers at that time to underwrite the sales. Furthermore, the Committee contends that it would maintain safeguards to mitigate the risk of conflicts. For example, the Committee notes that it would still appoint a conflicts monitor and perform its own monitoring of the Independent Fiduciary, and it would continue to raise any questions about potential conflicts.

Accordingly, the Committee proposes that, on page 64728 of the proposed exemption, Representation 16 should be revised, to replace the text referenced above, as follows:

> In the event that a single Independent Fiduciary is retained to represent two or more plan Accounts, and it proposes to sell Securities from two or more such Accounts at the same time, a separate investment bank (if any) will be retained for each Account with respect to the marketing or underwriting of the Securities. For this purpose, an investment bank will be considered as having been retained to market or underwrite securities if it is compensated on the success of the offering and/or as a percentage of the offering or sales proceeds. The foregoing does not preclude the engagement of a single investment bank to provide valuation services or long-term investment consulting on behalf of two or more plan Accounts, provided that (1) the fees of the investment bank are not contingent upon the success or size of an offering or sale, and (2) for each plan Account, the investment bank's recommendations are made solely with the goal of maximizing the returns for such Account.

In addition, the Committee explains that there may be some confusion as to whether two different Independent Fiduciaries may retain the same investment bank. The Committee states that there should be no limitations on the number of investment banks that the Independent Fiduciary must retain other than general fiduciary principles. According to the Committee, although it is unlikely that an Independent Fiduciary would consider, or that an investment bank would accept, an engagement that might involve marketing securities of two different companies in the same market at the same time, it would not be unusual, for instance, to retain the same investment bank to make a private offering of securities in the domestic market and a public offering of different securities in a foreign market, where such investment bank is best qualified to do so.

Accordingly, the Committee suggests that Representation 16 of the proposed exemption be modified to include the following:

> To the extent that two Accounts are represented by different Independent Fiduciaries, nothing herein shall prohibit the Independent Fiduciaries from retaining the same investment bank with respect to the Accounts which they manage if they determine that it is in the interest of their respective Accounts to do so.

The Department concurs with the Committee that, in the event that one Independent Fiduciary represents two or more (Separate Retiree) Accounts, and it proposes to sell Securities from two or more such Separate Retiree Accounts at the same time, then a separate investment bank (if any) will be retained for each Separate Retiree Account with respect to the marketing or underwriting of the Securities. Notwithstanding the above, nothing in the final exemption would preclude the Independent Fiduciary of two or more Separate Retiree Accounts from retaining the same investment banker to provide valuation services or long-term investment consulting on behalf of two or more of such Separate Retiree Accounts.[13] Lastly, with respect to the Committee's suggestion that, to the extent that two Separate Retiree Accounts are represented by different Independent Fiduciaries, nothing herein shall prohibit the Independent Fiduciaries from retaining the same investment bank with respect to the Separate Retiree Accounts which they manage if they determine that it is in the interest of their respective Separate Retiree Accounts to do so, the Department is of the view that a separate investment bank (if any) must be retained to represent each such Separate Retiree Account with respect to the marketing or underwriting of the Securities. Therefore, subject to these limitations, the Department concurs with the Committee's requested clarifications.

2. *Reporting Deviations From an Investment Bank's Recommendations.* If a single Independent Fiduciary is retained with respect to more than one Separate Retiree Account, on page 64728 of the proposed exemption, Representation 16 provides that the Independent Fiduciary shall report each instance in which it proposes to "deviate" from a "recommendation" of the investment bank. The Committee initially represented to the Department that such arrangement would help to minimize the likelihood of a conflict inherent in retaining one Independent Fiduciary to manage the securities of more than one Separate Retiree Account.

However, the Committee now proffers that this requirement may not be practical, in light of information gained

[12] According to the Committee, the most likely reason that an investment bank would propose going to market under this scenario is if the overall market itself is booming, such that there is ample appetite for the securities. In the event that a plan needs liquidity in a falling market, the Committee is more likely to explore other options, including reducing benefits or seeking alternative sources of capital such as through borrowing.

[13] In reaching the Department's conclusion, it is our understanding, based on the Committee's representations, that the fees paid to a single investment bank to provide valuation services or long-term investment consulting on behalf of two or more Separate Retiree Accounts will not be contingent upon the success or size of an offering or sale, and for each Separate Retiree Account, the investment bank's recommendations are made solely with the goal of maximizing the returns for such Account.

during the process of interviewing and selecting the Independent Fiduciaries in connection with the Ford, GM, and Chrysler exemption applications. The Committee notes that, typically, an investment bank will not "recommend" a single, specific course of action, but through a dialogue with the Independent Fiduciary will present, discuss, modify and refine various options and scenarios that the Independent Fiduciary ultimately will use in making its decisions as a fiduciary. Thus, the Committee argues that it would not be feasible for the Independent Fiduciary to report back to the Committee when it proposes to deviate from a specific recommendation, given that interactions between the Independent Fiduciary and an investment bank generally lack a single, identifiable "recommendation" (either orally or in writing) that the Independent Fiduciary does or does not intend to follow.

Moreover, the Committee contends that some investment banker recommendations are unlikely ever to raise conflict issues. For instance, the Committee notes that an investment bank may develop a preliminary valuation of certain Ford Securities of $xx, and after thorough consideration, the Independent Fiduciary may determine that such securities are actually worth $yy. In such event, the Committee asserts that the Independent Fiduciary's valuation might be viewed as a "deviation" from the initial recommendation but is unlikely to raise any conflict vis-à-vis any Securities held by the VEBA Trust.

The Committee is also concerned that the requirement for the Committee to review the reported deviations will cause the Committee to interpose itself between the two parties before such parties have reached a consensus. In this event, the Committee is concerned that it may have an implied obligation to substitute its judgment for that of the Independent Fiduciary.

The Department concurs with the Committee's comment that their initial representation that the Independent Fiduciary would report any deviations from the recommendation of the investment bank raises operational issues. Nevertheless, the Department notes that the Independent Fiduciary and the Committee are not relieved from their fiduciary duties under ERISA in carrying out their respective responsibilities. There may be circumstances where the Independent Fiduciary has a responsibility under ERISA to inform the conflicts monitor or the Committee of a deviation from the investment bank's recommendations, and the Committee, as part of its oversight responsibility, may need to take appropriate action based on such disclosure. Subject to the caveat above, the Department takes note of these clarifications and updates to the Summary of Facts and Representations of the proposed exemption.

3. *Ford's right to defer payments under New Note B.* The Committee suggests that the description of Ford's ability to defer payments in respect of New Note B, set out in Representation 9.b. in the middle column of page 64722 (beginning with "Furthermore * * *") may be inaccurate. The proposed exemption provides that, on each New Note B payment date, subject to satisfaction of all of the "Stock Settlement Conditions" (as described in the proposed exemption), Ford has the option to settle any or all of the amount due with respect to New Note B with Ford Common Stock designated as "Payment Shares." The proposed exemption further provides that:

> * * * if on any payment date under New Note B, conditions 1., 2., 3., 5., and 6. are met, then, subject to certain limitations, Ford would generally have the right to defer such payment by paying it in up to five equal annual installments beginning with the next scheduled payment date, with interest accruing at 9% beginning on the date such payment was originally due and continuing through the date such payment is made. Thus, Ford may make such payment (or installment thereof) in common stock on any deferred installment date if all the conditions for payment in common stock have been met on such date.

The Committee suggests that the above paragraph describing Ford's ability to defer payments in respect of New Note B, set out on page 67422 of the proposed exemption, should be revised to provide the following:

> Furthermore, if on any payment date under New Note B, all of the foregoing Stock Settlement Conditions other than conditions 4., 7. and/or 8. are met, then, subject to certain conditions, Ford would generally have the option to defer such payment and to pay it in up to five equal annual installments on the first through fifth anniversaries of such payment date together with interest at the rate of 9% from the date such payment was originally due through the applicable installment payment date. On each such installment payment date, if all of the Stock Settlement Conditions are then satisfied, Ford will have the option to pay the installment by delivering Payment Shares with the number of Payment Shares to be so delivered determined based on the volume-weighted average selling price per shares of Ford Common Stock for the 30 trading day period ending on the second business day prior to such installment payment date.

The Department concurs with the Committee's suggested revision to the proposed exemption, and takes note of the foregoing clarifications and updates to the Representations.

B. *Requests for Confirmation*

1. *Conditions Applicable in the Event That the Committee Appoints a Single Independent Fiduciary.* The Committee's comment requested confirmation that certain terms and conditions described in the Representations on page 64728, and incorporated into Sections II(b)(1) through (3) on page 64731, of the proposed exemption would apply only if and to the extent that the same Independent Fiduciary is appointed to represent two or more Separate Retiree Accounts.

Sections II(b)(1) through (3) of the proposed exemption provide that the Committee will take certain steps to mitigate potential conflicts of interest, including the appointment of a conflicts monitor, the adoption of procedures to facilitate prompt replacement of the Independent Fiduciary due to a conflict of interest, the adoption of a written policy by the Independent Fiduciary regarding conflicts, and the periodic reporting of actual or potential conflicts. Additionally, on page 64728 of the proposed exemption, Representation 16 provides that a separate investment bank will be retained with respect to each Separate Retiree Account, and in the event that the Independent Fiduciary deviates from the "initial recommendations" of an investment bank, "it would find it necessary to explain why it deviated from a recommendation."

The Department concurs with the Committee, that the terms and conditions described above will apply only if and to the extent that the same Independent Fiduciary is appointed to represent two or more Separate Retiree Accounts. Notwithstanding the above, nothing in the final exemption would preclude the Committee from adopting procedures similar to those described in Sections II(b)(1) through (3) of the proposed exemption in furtherance of its oversight responsibilities. However, the Department believes that the requirement that the Independent Fiduciary retain separate investment banks with respect to each Separate Retiree Account, subject to the limitations described above, applies regardless of how many Separate Retiree Accounts are represented by the same Independent Fiduciary.

2. *Investment Bank's Acknowledgement that the VEBA Trust is its Ultimate Client.* On page 64731 of the proposed exemption, Section II(e) provides that "any contract between the

Independent Fiduciary and an investment banker includes an acknowledgement by the investment banker that the investment banker's ultimate client is an ERISA Plan." In assisting the Department in formulating the conditions of the proposed exemption, the Committee represented to the Department that such acknowledgement would be helpful in the event that the Committee is forced to replace the Independent Fiduciary (such as in the event of an irreconcilable conflict). The Committee reasoned that this requirement would ensure that, in the event the Independent Fiduciary was replaced, the investment banker would continue to represent the plan and work with the replacement Independent Fiduciary.

After conducting interviews and consulting with numerous parties in its search for an independent fiduciary to manage the Securities received by the Ford VEBA Plan, the Committee has raised concerns regarding such condition. The Committee has requested that the Department confirm that this condition will not cause the investment bank to become a fiduciary or otherwise obligate the investment bank or the Independent Fiduciary to provide to the Committee any of the investment bank's work-product except upon request, nor will it obligate the Committee to request or review any such work product. The Committee contends that the Independent Fiduciary is both a named fiduciary and an investment manager, thus it should be free within the parameters of its contract to determine what information it shares with the Committee.

The Department confirms that the requirement that the investment banker acknowledge that its ultimate client is the Ford VEBA Plan will not, by itself, make the investment banker a fiduciary of the Ford VEBA Plan. Rather, whether an investment banker referred to in Section II of the proposed exemption becomes a fiduciary as a result of its provision of services depends on whether it meets the definition of a "fiduciary" as set forth in section 3(21) of ERISA and the regulations promulgated thereunder.

3. *Obligation of the Committee to Review the Investment Banker Reports.* As described in Representation 16, on page 64728 of the proposed exemption, several safeguards are provided to reduce the risk of conflict in the event that a single independent fiduciary is retained with respect to more than one Retiree Separate Account. Specifically, in assisting the Department to formulate these procedures, the Committee had suggested that a "conflicts monitor" would develop a process for identifying potential conflicts. As a result, the Department added Section II(b)(1)(ii) of the proposed exemption, which provides that a conflicts monitor appointed by the Committee "regularly review the… investment banker reports… to identify the presence of factors that could lead to a conflict."

After conducting interviews with candidates for the Independent Fiduciary position, the Committee has raised a concern regarding the conflicts monitor's duties. The Committee has requested confirmation that Section II(b)(1)(i) does not independently impose any obligation on the Committee to provide (or request) "investment banker reports" as a matter of course (*i.e.,* beyond ERISA's general fiduciary requirements). In its comment letter, the Committee notes that it may be appropriate for the conflicts monitor or the Committee (or any subcommittee with delegated authority) to review investment banker reports when provided to them by the Independent Fiduciary, or to request such reports under certain circumstances. However, the Committee maintains that such reports may contain information that is confidential or proprietary, or preliminary, or simply irrelevant to its responsibilities. Furthermore, according to the Committee, it is not clear what constitutes a "report," with the result that informal notes and/or emails may fall under the definition.

The Department concurs with the Committee that Section II(b)(1)(ii) of the proposed exemption does not independently impose an affirmative obligation on the Committee to provide (or request) "investment banker reports" as a matter of course beyond ERISA's general fiduciary requirements.

IFS' Comment

IFS submitted a written comment that is supportive of the proposed exemption, and seeks written clarification and confirmation from the Department as to the scope of the exemptive relief provided under the proposed exemption with respect to certain transactions involving Securities held by the Ford VEBA Plan.

A. *Exchange of Warrants for Warrants*

Section I(a)(1)-(5), on page 64730 of the proposed exemption, provides relief for the acquisition and holding of Securities by the Ford VEBA Plan and its funding vehicle, the VEBA Trust, from the restrictions of sections 406(a)(1)(A), 406(a)(1)(B), 406(a)(1)(E), 406(a)(2), 406(b)(1), 406(b)(2) and 407(a) of ERISA if the proposed exemption is granted by the Department.

Additionally, on page 64730 of the proposed exemption, Section I(a)(6) provides relief for the disposition of Securities by the Independent Fiduciary, if the exemption is granted. For these purposes, Section VII(q) and Section VII(z), on page 64733 of the proposed exemption, define "Securities" and "Warrants," respectively, as "the New Note A, the New Note B, the Warrants, the LLC Interest, any Payment Shares, and additional shares of Ford Common Stock acquired pursuant to the Independent Fiduciary's exercise of the Warrants," and as "warrants to acquire shares of Ford Common Stock, par value $0.01 per share, issued by Ford."

IFS requests clarification as to whether the aforementioned relief extends to warrants issued by Ford or Ford Common Stock acquired and held by the Ford VEBA Plan as a result of the disposition of all or some of the Securities of a like type (*e.g.,* warrant for warrant or stock for stock) (In-Kind Ford Securities) by the Independent Fiduciary in exchange for some or all of the Securities. IFS posits that the same question arises in the context of a disposition of Warrants by the Independent Fiduciary in a transaction in which the consideration the Ford VEBA Plan receives consists in whole or in part of In-Kind Ford Securities that constitute Ford issued warrants.

IFS notes that it may determine that it is in the interest of the Ford VEBA Plan's participants and beneficiaries to sell certain Warrants in exchange for a combination of cash and other Ford issued warrants.[14] IFS explains that the warrants [given by Ford] would have a fair market value no less than the fair market value of the Warrants the Ford VEBA Plan is selling.[15] For example, IFS suggests that it may find it in the interest of the Ford VEBA Plan and its participants and beneficiaries to sell a Warrant to Ford in exchange for cash and a replacement warrant of shorter/longer duration or with a different strike price. In this example, IFS highlights three transactions; namely, (1) the disposition of Warrants by IFS in its role as the Independent Fiduciary in favor of other Ford issued warrants, (2) the acquisition of the new warrants by the Ford VEBA Plan, and (3) the holding of

[14] IFS states that any such transaction would be entered into only after IFS has met all the conditions precedent to entering into such a transaction as set forth in Section II of the proposed exemption, including, but not limited to, determining that the transaction is feasible, in the best interests of the Ford VEBA Plan, and protective of the participants and beneficiaries of the Ford VEBA Plan.

[15] IFS notes that for this purpose, it would seek the advice of an investment advisor to determine value.

these warrants by the Ford VEBA Plan. IFS is seeking confirmation from the Department that each of these In-Kind Ford Securities and like transactions, assuming the transactions otherwise meet the conditions set forth in Section II of the proposed exemption, would fall within the exemptive relief contemplated under the proposed exemption.[16]

More specifically, IFS is seeking confirmation that what it has defined as "other Ford issued warrants" would fall within the definitions of Securities and warrants, as applicable, for purposes of the proposed exemption. IFS states that inclusion of such warrants in the definitions of Securities and Warrants is critical inasmuch as the warrants will themselves be subject to future transactions as IFS seeks to dispose of these securities in a manner that is consistent with its duties to the Ford VEBA Plan and its participants and beneficiaries.

B. *Securities Acquired in Connection With a Corporate Transaction*

In addition to the transactions discussed above, IFS requests clarification whether the proposed exemption would cover Ford Common Stock or Warrants acquired in connection with a corporate transaction, restructuring or other change in capital structure of Ford (such Securities hereinafter referred to as after-acquired securities). IFS notes that, under this scenario, the Ford VEBA Plan would receive after-acquired securities in exchange for, or with respect to, all or some of the Securities of like kind then held by the Ford VEBA Plan due to a corporate transaction, restructuring, or other change in Ford's capital structure.[17]

As noted in Representation 16 of the proposed exemption, on page 64727, the Independent Fiduciary does not have authority to vote Ford Common Stock. Thus, IFS notes that it would have little, if any, ability to affect the negotiation and ultimate approval of any such corporate transaction. Moreover, IFS suggests that the Department has previously issued relief from sections 406(a)(1)(A), 406(a)(1)(B), 406(a)(1)(E), 406(a)(2), 406(b)(1), 406(b)(2) and 407(a) of ERISA for the disposition of securities by an independent fiduciary as well as the acquisition and holding of any after-acquired securities in this type of scenario in a previous individual exemption.[18]

In response to the above referenced comments, the Department confirms that the proposed exemption provides exemptive relief for other Ford issued warrants acquired in exchange for Warrants held by the Ford VEBA Plan at the direction of the Independent Fiduciary, and such relief also extends to additional shares of Ford Common Stock or other Ford issued warrants acquired in exchange for Ford Common Stock or Warrants held by the Ford VEBA Plan in connection with a restructuring, recapitalization, merger or other corporate transaction involving Ford. Accordingly, the Department has made revisions to the definitions of "Securities" and "Warrants" in Section VII(r) and Section VII(aa), respectively, of the final exemption. In addition, the Department takes note of the foregoing clarifications and updates to the Representations.

The Department has carefully considered the issues expressed by the commenters in their written comments, including the issues raised by the individuals who had telephoned the Department. After consideration of the commenters' concerns and documentation provided, the Department does not believe that any material factual issues have been raised which would require the convening of a public hearing. Further, after giving full consideration to the entire record, including the comments, the Department has determined to grant the exemption, subject to the modifications and clarifications described herein.

For a complete statement of the facts and representations supporting the Department's decision to grant this exemption, refer to the notice of proposed exemption that was published in the **Federal Register** on December 8, 2009 at 74 FR 64716. For further information regarding the comments and other matters discussed herein, interested persons are encouraged to obtain copies of the exemption application file (Exemption Application No. L–11575) the Department is maintaining in this case. The complete application file, as well as all supplemental submissions received by the Department, are made available for public inspection in the Public Disclosure Room of the Employee Benefits Security Administration, Room N–1513, US Department of Labor, 200 Constitution Avenue, NW., Washington, DC 20210. The written comments may also be viewed online at *http://www.regulations.gov,* at Docket ID Number: EBSA–2009–0026.

General Information

The attention of interested persons is directed to the following:

(1) The fact that a transaction is the subject of an exemption under section 408(a) of ERISA does not relieve a fiduciary or other party in interest from certain other provisions of ERISA, including any prohibited transaction provisions to which the exemption does not apply and the general fiduciary responsibility provisions of section 404 of ERISA, which, among other things, require a fiduciary to discharge his duties respecting the plan solely in the interest of the participants and beneficiaries of the plan and in a prudent fashion in accordance with section 404(a)(1)(B) of ERISA;

(2) In accordance with section 408(a) of ERISA, the Department makes the following determinations:

(a) The exemption is administratively feasible;

(b) The exemption is in the interests of the Ford VEBA Plan and of its participants and beneficiaries; and

(c) The exemption is protective of the rights of participants and beneficiaries participating in the Ford VEBA Plan; and

(3) The exemption is supplemental to, and not in derogation of, any other provisions of ERISA, including statutory or administrative exemptions and transitional rules. Furthermore, the fact that a transaction is subject to an administrative or statutory exemption is not dispositive of whether the transaction is in fact a prohibited transaction.

Accordingly, the following exemption is granted under the authority of section 408(a) of ERISA and in accordance with the procedures set forth in 29 CFR Part 2570, Subpart B (55 FR 32836, 32847, August 10, 1990).

Exemption

Section I. Covered Transactions

(a) The restrictions of sections 406(a)(1)(A), 406(a)(1)(B), 406(a)(1)(E), 406(a)(2), 406(b)(1), 406(b)(2) and 407(a) of ERISA shall not apply, effective December 31, 2009, to:

(1) The acquisition by the UAW Ford Retirees Medical Benefits Plan (the Ford

[16] IFS notes that it is not suggesting that transactions which would fundamentally alter the terms of the Settlement Agreement are being contemplated, nor is IFS seeking to bring any such transactions within the scope of the Proposed PTE.

[17] IFS notes that certain corporate transactions are contemplated under the Warrants such that on the occurrence of the transaction the exercise price available to the Ford VEBA Plan would be adjusted. See, *e.g.,* Section 5.01(e) of the Warrant Agreement dated as of December 11, 2009 between Ford Motor Company and Computershare Trust Company, N.A. as Warrant Agent; See, also, Section 7.02 of the Securityholder and Registration Rights Agreement.

[18] *Calpine Corporation,* PTE 2009–01, 74 FR 3644 (January 21, 2009). See also *The Golden Comprehensive Security Program, et al.,* PTE 2002–02, 67 FR 1243 (January 9, 2002).

VEBA Plan) and its funding vehicle, the UAW Retiree Medical Benefits Trust (the VEBA Trust) of: (i) The LLC Interests; (ii) New Note A; (iii) New Note B (together with New Note A, the New Notes); and (iv) Warrants, transferred by Ford and deposited in the Ford Employer Security Sub-Account of the Ford Separate Retiree Account of the VEBA Trust.

(2) The acquisition by the Ford VEBA Plan of shares of Ford Common Stock pursuant to Ford's right to settle its payment obligations under New Note B in shares of Ford Common Stock (*i.e.,* Payment Shares), consistent with the 2009 Settlement Agreement;

(3) The acquisition by the Ford VEBA Plan of shares of Ford Common Stock pursuant to (i) the Independent Fiduciary's exercise of all or a pro rata portion of the Warrants, consistent with the 2009 Settlement Agreement and (ii) an adjustment, substitution, conversion, or other modification of Ford Common Stock in connection with a reorganization, restructuring, recapitalization, merger, or similar corporate transaction, provided that each holder of Ford Common Stock is treated in an identical manner;

(4) The holding by the Ford VEBA Plan of the aforementioned Securities in the Ford Employer Security Sub-Account of the Ford Separate Retiree Account of the VEBA Trust, consistent with the 2009 Settlement Agreement;

(5) The deferred payment of any amounts due under New Note B by Ford pursuant to the terms thereunder; and

(6) The disposition of the Securities by the Independent Fiduciary.

(b) The restrictions of sections 406(a)(1)(A), 406(b)(1), and 406(b)(2) of ERISA shall not apply, effective December 31, 2009, to the sale of Ford Common Stock or Warrants held by the Ford VEBA Plan to Ford in accordance with the Right of First Offer or a Ford self-tender under the Securityholder and Registration Rights Agreement.

(c) The restrictions of sections 406(a)(1)(B), 406(a)(1)(D), 406(b)(1), and 406(b)(2) of ERISA shall not apply, effective December 31, 2009, to:

(1) The extension of credit or transfer of assets by Ford, the Ford Retiree Health Plan, or the Ford VEBA Plan in payment of a benefit claim that was the responsibility and legal obligation, under the terms of the applicable plan documents, of one of the other parties listed in this paragraph;

(2) The reimbursement by Ford, the Ford Retiree Health Plan, or the Ford VEBA Plan, of a benefit claim that was paid by another party listed in this paragraph, which was not legally responsible for the payment of such claim, plus interest;

(3) The retention of an amount by Ford until payment to the Ford VEBA Plan resulting from an overaccrual of pre-transfer expenses attributable to the TAA or the retention of an amount by the Ford VEBA Plan until payment to Ford resulting from an underaccrual of pre-transfer expense attributable to the TAA; and

(4) The Ford VEBA Plan's payment to Ford of an amount equal to any underaccrual by Ford of pre-transfer expenses attributable to the TAA or the payment by Ford to the Ford VEBA Plan of an amount equal to any overaccrual by Ford of pre-transfer expenses attributable to the TAA.

(d) The restrictions of sections 406(a)(1)(B), 406(a)(1)(D), 406(b)(1), and 406(b)(2) of ERISA shall not apply, effective December 31, 2009, to the return to Ford of assets deposited or transferred to the Ford VEBA Plan by mistake, plus interest.

Section II. Conditions Applicable to Section I(a) and I(b)

(a) The Committee appoints a qualified Independent Fiduciary to act on behalf of the Ford VEBA Plan for all purposes related to the transfer of the Securities to the Ford VEBA Plan for the duration of the Ford VEBA Plan's holding of the Securities. Such Independent Fiduciary will have sole discretionary responsibility relating to the holding, ongoing management and disposition of the Securities, except for the voting of the Ford Common Stock. The Independent Fiduciary has determined or will determine, before taking any actions regarding the Securities, that each such action or transaction is in the interest of the Ford VEBA Plan.

(b) In the event that the same Independent Fiduciary is appointed to represent the interests of one or more of the other plans comprising the VEBA Trust (*i.e.,* the UAW Chrysler Retiree Medical Benefits Plan and/or the UAW General Motors Company Retiree Medical Benefits Plan) with respect to employer securities deposited into the VEBA Trust, the Committee takes the following steps to identify, monitor and address any conflict of interest that may arise with respect to the Independent Fiduciary's performance of its responsibilities:

(1) The Committee appoints a "conflicts monitor" to: (i) develop a process for identifying potential conflicts; (ii) regularly review the Independent Fiduciary reports, investment banker reports, and public information regarding the companies, to identify the presence of factors that could lead to a conflict; and (iii) further question the Independent Fiduciary when appropriate.

(2) The Committee adopts procedures to facilitate prompt replacement of the Independent Fiduciary if the Committee in its sole discretion determines such replacement is necessary due to a conflict of interest.

(3) The Committee requires the Independent Fiduciary to adopt a written policy regarding conflicts of interest. Such policy shall require that, as part of the Independent Fiduciary's periodic reporting to the Committee, the Independent Fiduciary includes a discussion of actual or potential conflicts identified by the Independent Fiduciary and options for avoiding or resolving the conflicts.

(c) The Independent Fiduciary authorizes the trustee of the Ford VEBA Plan to dispose of the Ford Common Stock (including any Payment Shares or any shares of Ford Common Stock acquired pursuant to exercise of the Warrants), the LLC Interests, the New Notes, or exercise the Warrants, only after the Independent Fiduciary determines, at the time of the transaction, that the transaction is feasible, in the interest of the Ford VEBA Plan, and protective of the participants and beneficiaries of the Ford VEBA Plan.

(d) The Independent Fiduciary negotiates and approves on behalf of the Ford VEBA Plan any transactions between the Ford VEBA Plan and any party in interest involving the Securities that may be necessary in connection with the subject transactions (including but not limited to the registration of the Securities contributed to the Ford VEBA Plan).

(e) Any contract between the Independent Fiduciary and an investment banker includes an acknowledgement by the investment banker that the investment banker's ultimate client is an ERISA plan.

(f) The Independent Fiduciary discharges its duties consistent with the terms of the Ford VEBA Plan, the Trust Agreement, the Independent Fiduciary Agreement, and any other documents governing the Securities, such as the Registration Rights Agreement.

(g) The Ford VEBA Plan incurs no fees, costs or other charges (other than described in the Trust Agreement, the 2009 Settlement Agreement, and the Securityholder and Registration Rights Agreement) as a result of the transactions exempted herein.

(h) The terms of any transaction exempted herein are no less favorable to the Ford VEBA Plan than the terms

negotiated at arms' length under similar circumstances between unrelated parties.

Section III. Conditions Applicable to Section I(c)(1) and I(c)(2)

(a) The Committee and the Ford VEBA Plan's third party administrator will review the benefits paid during the transition period and determine the dollar amount of mispayments made, subject to the review of the Ford VEBA Plan's independent auditor. The results of this review will be made available to Ford.

(b) Ford and the applicable third party administrator of the Ford Active Health Plan will review the benefits paid during the transition period and determine the dollar amount of mispayments made, subject to the review of the plan's independent auditor. The results of this review will be made available to the Committee.

(c) Interest on any reimbursed mispayment will accrue from the date of the mispayment to the date of the reimbursement.

(d) Interest will be determined using the applicable 6 month published LIBOR rate.

(e) If there is a dispute as to the amount, timing or other feature of a reimbursement payment, the parties will enter into the Dispute Resolution Procedure found in Section 26B of the 2009 Settlement Agreement and described further in Section VII(c) herein.

Section IV. Conditions Applicable to Section I(c)(3) and I(c)(4)

(a) Ford and the Committee will cooperate in the calculation and review of the amounts of expense accruals related to the TAA, and the amount of any overaccrual shall be made subject to the review of an independent auditor selected by Ford and the amount of any underaccrual shall be made subject to the review of the Ford VEBA Plan's independent auditor.

(b) Ford must make a claim for any underaccrual to the Committee, and the Committee must make a claim for any overaccrual to Ford, as applicable, within the Verification Time Period, as defined in Section VII(z).

(c) Interest on any true-up payment will accrue from the date of transfer of the assets in the TAA (or the LLC containing the TAA) for the amount in respect of the overaccrual or underaccrual, as applicable, until the date of payment of such true-up amount.

(d) Interest will be determined using the published six month LIBOR rate.

(e) If there is a dispute as to the amount, timing or other feature of a true-up payment in respect of TAA expenses, the parties will enter into the Dispute Resolution Procedure found in Section 26B of the 2009 Settlement Agreement and described further in Section VII(c) herein.

Section V. Conditions Applicable to Section I(d)

(a) Ford must make a claim to the Committee regarding the specific deposit or transfer made in error or made in an amount greater than that to which the Ford VEBA Plan was entitled.

(b) The claim is made within the Verification Time Period, as defined in Section VII(z).

(c) Interest on any mistaken deposit or transfer will accrue from the date of the mistaken deposit or transfer to the date of the repayment.

(d) Interest will be determined using the published six-month LIBOR rate.

(e) If there is a dispute as to the amount, timing or other feature of a mistaken payment, the parties will enter into the Dispute Resolution Procedure found in Section 26B of the 2009 Settlement Agreement and described further in Section VII(c) herein.

Section VI. Conditions Applicable to Section I

(a) The Committee and the Independent Fiduciary maintain for a period of six years from the date (i) the Securities are transferred to the Ford VEBA Plan, and (ii) the shares of Ford Common Stock are acquired by the Ford VEBA Plan through the exercise of the Warrants or Ford's delivery of Payment Shares in settlement of its payment obligations under New Note B, the records necessary to enable the persons described in paragraph (b) below to determine whether the conditions of this exemption have been met, provided that (i) a separate prohibited transaction will not be considered to have occurred if, due to circumstances beyond the control of the Committee and/or the Independent Fiduciary, the records are lost or destroyed prior to the end of the six-year period, and (ii) no party in interest other than the Committee or the Independent Fiduciary shall be subject to the civil penalty that may be assessed under ERISA section 502(i) if the records are not maintained, or are not available for examination as required by paragraph (b) below; and

(b) Notwithstanding any provisions of subsections (a)(2) and (b) of section 504 of ERISA, the records referred to in paragraph (a) above shall be unconditionally available at their customary location during normal business hours to:

(1) Any duly authorized employee or representative of the Department or the Internal Revenue Service;

(2) The UAW or any duly authorized representative of the UAW;

(3) Ford or any duly authorized representative of Ford;

(4) The Independent Fiduciary or any duly authorized representative of the Independent Fiduciary;

(5) The Committee or any duly authorized representative of the Committee; and

(6) Any participant or beneficiary of the Ford VEBA Plan or any duly authorized representative of such participant or beneficiary.

(c) None of the persons described above in paragraphs (b)(2), (4)–(6) shall be authorized to examine trade secrets of Ford, or commercial or financial information which is privileged or confidential, and should Ford refuse to disclose information on the basis that such information is exempt from disclosure, Ford shall, by the close of the thirtieth (30th) day following the request, provide a written notice advising that person of the reasons for the refusal and that the Department may request such information.

Section VII. Definitions

(a) The term "affiliate" means: (1) Any person directly or indirectly, through one or more intermediaries, controlling, controlled by, or under common control with such other person; (2) any officer, director, partner, or employee in any such person, or relative (as defined in section 3(15) of ERISA) of any such person; or (3) any corporation, partnership or other entity of which such person is an officer, director or partner. (For purposes of this definition, the term "control" means the power to exercise a controlling influence over the management or policies of a person other than an individual).

(b) The "Committee" means the eleven individuals consisting of six independent members and five UAW appointed members who will serve as the plan administrator and named fiduciary of the Ford VEBA Plan.

(c) The term "Dispute Resolution Procedure" means the process found in Section 26B of the 2009 Settlement Agreement to effectuate the resolution of any dispute respecting the transactions described in Sections I(c)(1), (c)(2), (c)(3), (c)(4), and (d) herein, and which reads in pertinent part: (1) The aggrieved party shall provide the party alleged to have violated the 2009 Settlement Agreement (Dispute Party) with written notice of

such dispute, which shall include a description of the alleged violation and identification of the Section(s) of the 2009 Settlement Agreement allegedly violated. Such notice shall be provided so that it is received by the Dispute Party no later than 180 calendar days from the date of the alleged violation or the date on which the aggrieved party knew or should have known of the facts that give rise to the alleged violation, whichever is later, but in no event longer than 3 years from the date of the alleged violation; and (2) If the Dispute Party fails to respond within 21 calendar days from its receipt of the notice, the aggrieved party may seek recourse to the District Court; provided however, that the aggrieved party waives all claims related to a particular dispute against the Dispute Party if the aggrieved party fails to bring the dispute before the District Court within 180 calendar days from the date of sending the notice. All the time periods in Section 26 of the 2009 Settlement Agreement may be extended by agreement of the parties to the particular dispute.

(d) The term "Exchange Agreement" means the Security Exchange Agreement among Ford, the subsidiary guarantors listed in Schedule I thereto and the LLC, dated as of December 11, 2009.

(e) The term "Ford" or the "Applicant" means Ford Motor Company, located in Detroit MI, and its affiliates.

(f) The term "Ford Active Health Plan" means the medical benefits plan maintained by Ford to provide benefits to eligible active hourly employees of Ford and its participating subsidiaries.

(g) The term "Ford Common Stock" means the shares of common stock, par value $0.01 per share, issued by Ford.

(h) The term "Ford Employer Security Sub-Account of the Ford Separate Retiree Account of the VEBA Trust" means the sub-account established in the Ford Separate Retiree Account of the VEBA Trust to hold Securities on behalf of the Ford VEBA Plan.

(i) The term "Ford Retiree Health Plan" means the retiree medical benefits plan maintained by Ford that provided benefits to, among others, those who will be covered by the Ford VEBA Plan.

(j) The term "Implementation Date" means December 31, 2009.

(k) The term "Independent Fiduciary" means a fiduciary that is (1) independent of and unrelated to Ford, the UAW, the Committee, and their affiliates, and (2) appointed to act on behalf of the Ford VEBA Plan with respect to the holding, management and disposition of the Securities. In this regard, the fiduciary will be deemed not to be independent of and unrelated to Ford, the UAW, the Committee, and their affiliates if (1) such fiduciary directly or indirectly controls, is controlled by, or is under common control with Ford, the UAW, the Committee or their affiliates, (2) such fiduciary directly or indirectly receives any compensation or other consideration from Ford, the UAW or any Committee member in his or her individual capacity in connection with any transaction contemplated in this exemption (except that an Independent Fiduciary may receive compensation from the Committee or the Ford VEBA Plan for services provided to the Ford VEBA Plan in connection with the transactions discussed herein if the amount or payment of such compensation is not contingent upon or in any way affected by the independent fiduciary's ultimate decision), and (3) the annual gross revenue received by the fiduciary, in any fiscal year, from Ford, the UAW or a member of the Committee in his or her individual capacity, exceeds 3% of the fiduciary's annual gross revenue from all sources (for federal income tax purposes) for its prior tax year.[19]

(l) The term "LLC" means the Ford-UAW Holdings LLC, established by Ford as a wholly-owned LLC, and subsequently renamed VEBA–F Holdings LLC, established to hold the assets in the TAA and certain other assets required to be contributed to the VEBA under the 2008 Settlement Agreement, as amended by the 2009 Settlement Agreement.

(m) The term "LLC Interests" means Ford's wholly-owned interest in the LLC.

(n) The term "New Note A" means the amortizing guaranteed secured note maturing on June 30, 2022, in the principal amount of $6,705,470,000, with payments to be made in cash, in annual installments from 2009 through 2022, issued by Ford and referred to in the Exchange Agreement.

(o) The term "New Note B" means the amortizing guaranteed secured note maturing June 30, 2022, in the principal amount of $6,511,850,000, with payments to be made in cash, Ford Common Stock, or a combination thereof, in annual installments from 2009 through 2022, issued by Ford and referred to in the Exchange Agreement.

(p) The term "Payment Shares" means any shares of Ford Common Stock issued by Ford to satisfy all or a portion of its payment obligation under New Note B, subject to the terms and conditions specified in New Note B.

(q) The term "published six month LIBOR rate" means the Official British Banker's Association Six Month London Interbank Offered Rate (LIBOR) 11:00am GMT "fixing" as reported on Bloomberg page "BBAM".[20]

(r) The term "Securities" means (1) New Note A; (2) New Note B; (3) the Warrants; (4) the LLC Interests, (5) any Payment Shares, and (6) additional shares of Ford Common Stock acquired in accordance with the transactions described in Sections I(a)(2) and (3) of this exemption.

(s) The term "Securityholder and Registration Rights Agreement" means the Securityholder and Registration Rights Agreement by and among Ford and the LLC, dated as of December 11, 2009.

(t) The term "2008 Settlement Agreement" means the settlement agreement, effective as of August 29, 2008, entered into by Ford, the UAW, and a class of retirees in the case of *Int'l Union, UAW, et al.* v. *Ford Motor Company,* Civil Action No. 07–14845, 2008 WL 4104329 (E.D. Mich. Aug. 29, 2008).

(u) The term "2009 Settlement Agreement" means the 2008 Settlement Agreement, as amended by an Amendment to such Settlement Agreement dated July 23, 2009, effective as of November 9, 2009, entered into by Ford, the UAW, and a class of retirees in the case of *Int'l Union, UAW, et al.* v. *Ford Motor Company,* Civil Action No. 07–14845, 2008 WL 4104329 (E.D. Mich. Aug. 29, 2008), *Order and Final Judgment Granted,* Civil Action No. 07–14845, Doc. #71, (E.D. Mich. Nov. 9, 2009).

(v) The term "TAA" means the temporary asset account established by Ford under the 2008 Settlement Agreement to serve as tangible evidence of the availability of Ford assets equal to Ford's obligation to the Ford VEBA Plan.

(w) The term "Trust Agreement" means the trust agreement for the VEBA Trust.

(x) The term "UAW" means the International Union, United

[19] The Department notes that the preceding conditions are not exclusive, and that other circumstances may develop which cause the Independent Fiduciary to be deemed not to be independent of and unrelated to Ford, the UAW, the Committee, and their affiliates.

[20] LIBOR is calculated by Thomson Reuters and published by the British Bankers' Association after 11 a.m. (and generally around 11:45 a.m.) each day (London time). It is a trimmed average of inter-bank deposit rates offered by designated contributor banks, for maturities ranging from overnight to one year. The rates are a benchmark rather than a tradable rate, the actual rate at which banks will lend to one another continues to vary throughout the day.

Automobile, Aerospace and Agricultural Implement Workers of America.

(y) The term "VEBA" means the Ford UAW Retirees Medical Benefits Plan (the Ford VEBA Plan) and its associated UAW Retiree Medical Benefits Trust (the VEBA Trust).

(z) The term "Verification Time Period" means: (1) With respect to each of the Securities other than the payments in respect of the New Notes, the period beginning on the date of publication of the final exemption in the **Federal Register** (or, if later, the date of the transfer of any such Security to the Ford VEBA Plan) and ending 90 calendar days thereafter; (2) with respect to each payment pursuant to the New Notes, the period beginning on the date of the payment and ending 90 calendar days thereafter; and (3) with respect to the TAA, the period beginning on the date of publication of the final exemption in the **Federal Register** (or, if later, the date of the transfer of the assets in the TAA to the Ford VEBA Plan) and ending 180 calendar days thereafter.

(aa) The term "Warrants" means warrants issued by Ford to acquire 362,391,305 shares of Ford Common Stock at a strike price of $9.20 per share, expiring on January 1, 2013. For purposes of this definition, the term "Warrants" includes additional warrants to acquire Ford Common Stock acquired in partial or complete exchange for, or adjustment to, the warrants described in the preceding sentence, at the direction of the Independent Fiduciary or pursuant to a reorganization, restructuring or recapitalization of Ford as well as a merger or similar corporate transaction involving Ford (each, a corporate transaction), provided that, in such corporate transaction, similarly situated warrantholders, if any, will be treated the same to the extent that the terms of such warrants and/or rights of such warrantholders are the same.

Signed at Washington, DC, this 19th day of March, 2010.

Ivan Strasfeld,

Director of Exemption Determinations, Employee Benefits Security Administration, U.S. Department of Labor.

[FR Doc. 2010–6458 Filed 3–23–10; 8:45 am]

BILLING CODE 4510–29–P

NATIONAL SCIENCE FOUNDATION

Engineering Advisory Committee; Notice of Meeting

In accordance with Federal Advisory Committee Act (Pub. L. 92–463, as amended), the National Science Foundation announces the following meeting:

Name: Advisory Committee for Engineering, #1170.

Date/Time: April 14, 2010: 12 p.m. to 6 p.m. April 15, 2010: 8:15 a.m. to 12 p.m.

Place: National Science Foundation, 4201 Wilson Boulevard, Suite 1235, Arlington, Virginia 22230.

Type of Meeting: Open.

Contact Person: Deborah Young, National Science Foundation, 4201 Wilson Boulevard, Suite 505, Arlington, Virginia 22230 703/292–8300.

Purpose of Meeting: To provide advice, recommendations and counsel on major goals and policies pertaining to engineering programs and activities.

Agenda: The principal focus of the meeting on both days will be to discuss emerging issues and opportunities for the Directorate for Engineering and its divisions and review Committee of Visitors Reports.

Dated: March 19, 2010.

Susanne Bolton,

Committee Management Officer.

[FR Doc. 2010–6448 Filed 3–23–10; 8:45 am]

BILLING CODE 7555–01–P

NUCLEAR REGULATORY COMMISSION

[Docket No. NRC–2010–0104]

Agency Information Collection Activities: Proposed Collection; Comment Request

AGENCY: U.S. Nuclear Regulatory Commission (NRC).

ACTION: Notice of pending NRC action to submit an information collection request to the Office of Management and Budget (OMB) and solicitation of public comment.

SUMMARY: The NRC invites public comment about our intention to request the OMB's approval for renewal of an existing information collection that is summarized below. We are required to publish this notice in the **Federal Register** under the provisions of the Paperwork Reduction Act of 1995 (44 U.S.C. Chapter 35).

Information pertaining to the requirement to be submitted:

1. *The title of the information collection:* 10 CFR Part 95—Facility Security Clearance and Safeguarding of National Security Information and Restricted Data.

2. *Current OMB approval number:* 3150–0047.

3. *How often the collection is required:* On occasion.

4. *Who is required or asked to report:* NRC-regulated facilities and other organizations requiring access to NRC-classified information.

5. *The number of annual respondents:* 16.

6. *The number of hours needed annually to complete the requirement or request:* 1,087 hours (938 hours reporting plus 149 hours recordkeeping).

7. *Abstract:* NRC-regulated facilities and other organizations are required to provide information and maintain records to ensure that an adequate level of protection is provided to NRC-classified information and material.

Submit, by May 24, 2010, comments that address the following questions:

1. Is the proposed collection of information necessary for the NRC to properly perform its functions? Does the information have practical utility?

2. Is the burden estimate accurate?

3. Is there a way to enhance the quality, utility, and clarity of the information to be collected?

4. How can the burden of the information collection be minimized, including the use of automated collection techniques or other forms of information technology?

A copy of the draft supporting statement may be viewed free of charge at the NRC Public Document Room, One White Flint North, 11555 Rockville Pike, Room O–1 F21, Rockville, MD 20852. OMB clearance requests are available at the NRC worldwide Web site: *http://www.nrc.gov/public-involve/doc-comment/omb/index.html.* The document will be available on the NRC home page site for 60 days after the signature date of this notice. Comments submitted in writing or in electronic form will be made available for public inspection. Because your comments will not be edited to remove any identifying or contact information, the NRC cautions you against including any information in your submission that you do not want to be publicly disclosed. Comments submitted should reference Docket No. NRC–2010–0104. You may submit your comments by any of the following methods. *Electronic comments:* Go to *http://www.regulations.gov* and search for Docket No. NRC–2010–0104. Mail comments to NRC Clearance Officer, Tremaine Donnell (T–5 F53), U.S. Nuclear Regulatory Commission, Washington, DC 20555–0001. Questions about the information collection requirements may be directed to the NRC Clearance Officer, Tremaine Donnell (T–5 F53), U.S. Nuclear Regulatory Commission, Washington, DC 20555–0001, by telephone at 301–415–6258, or by e-mail to *INFOCOLLECTS.Resource@NRC.GOV.*

Dated at Rockville, Maryland, this 17th day of March, 2010.

For the Nuclear Regulatory Commission.

Tremaine Donnell,

NRC Clearance Officer, Office of Information Services.

[FR Doc. 2010–6470 Filed 3–23–10; 8:45 am]

BILLING CODE 7590–01–P

NUCLEAR REGULATORY COMMISSION

[Docket No. NRC–2010–0118]

Agency Information Collection Activities: Proposed Collection; Comment Request

AGENCY: U.S. Nuclear Regulatory Commission (NRC).

ACTION: Notice of pending NRC action to submit an information collection request to the Office of Management and Budget (OMB) and solicitation of public comment.

SUMMARY: The NRC invites public comment about our intention to request the OMB's approval for renewal of an existing information collection that is summarized below. We are required to publish this notice in the **Federal Register** under the provisions of the Paperwork Reduction Act of 1995 (44 U.S.C. Chapter 35).

Information pertaining to the requirement to be submitted:

1. *The title of the information collection:* 10 CFR Part 52, "Licenses, Certifications, and Approvals for Nuclear Power Plants"

2. *Current OMB approval number:* 3150–0151.

3. *How often the collection is required:* Whenever applications are made for Early Site Permits (ESPs), Standard Design Certifications (SDCs), Combined Licenses (COLs), Standard Design Approvals (SDAs), or Manufacturing Licenses (MLs); and every 10 to 20 years for applications for renewal.

4. *Who is required or asked to report:* Designers of commercial nuclear power plants (NPPs), electric power companies, and any person eligible under the Atomic Energy Act to apply for ESPs, SDCs, COLs, or MLs.

5. *The number of annual respondents:* 14.

6. *The number of hours needed annually to complete the requirement or request:* 207,244 hours (194,341 hours reporting + 12,903 hours recordkeeping).

7. *Abstract:* 10 CFR Part 52 establishes requirements for the granting of ESPs, certifications of standard NPP designs, and licenses which combine in a single license a construction permit, and an operating license with conditions, OLs, MLs, SDAs, and pre-application reviews of site suitability issues. Part 52 also establishes requirements for renewal of those approvals, permits, certifications, and licenses; amendments to them; exemptions from certifications; and variances from ESPs.

NRC uses the information collected to assess the adequacy and suitability of an applicant's site, plant design, construction, training and experience, and plans and procedures for the protection of public health and safety. The NRC review of such information and the findings derived from that information form the basis of NRC decisions and actions concerning the issuance, modification or revocation of site permits, DCs, COLs, and MLs for NPPs.

Submit, by May 24, 2010, comments that address the following questions:

1. Is the proposed collection of information necessary for the NRC to properly perform its functions? Does the information have practical utility?

2. Is the burden estimate accurate?

3. Is there a way to enhance the quality, utility, and clarity of the information to be collected?

4. How can the burden of the information collection be minimized, including the use of automated collection techniques or other forms of information technology?

A copy of the draft supporting statement may be viewed free of charge at the NRC Public Document Room, One White Flint North, 11555 Rockville Pike, Room O–1 F21, Rockville, MD 20852. OMB clearance requests are available at the NRC worldwide Web site: *http://www.nrc.gov/public-involve/doc-comment/omb/index.html.* The document will be available on the NRC home page site for 60 days after the signature date of this notice. Comments submitted in writing or in electronic form will be made available for public inspection. Because your comments will not be edited to remove any identifying or contact information, the NRC cautions you against including any information in your submission that you do not want to be publicly disclosed. Comments submitted should reference Docket No. NRC–2010–0118. You may submit your comments by any of the following methods. *Electronic comments:* Go to *http://www.regulations.gov* and search for Docket No. NRC–2010–0118. Mail comments to NRC Clearance Officer, Tremaine Donnell (T–5 F53), U.S. Nuclear Regulatory Commission, Washington, DC 20555–0001. Questions about the information collection requirements may be directed to the NRC Clearance Officer, Tremaine Donnell (T–5 F53), U.S. Nuclear Regulatory Commission, Washington, DC 20555–0001, by telephone at 301–415–6258, or by e-mail to *INFOCOLLECTS.Resource@NRC.GOV.*

Dated at Rockville, Maryland, this 17th day of March, 2010.

For the Nuclear Regulatory Commission.

Tremaine Donnell,

NRC Clearance Officer, Office of Information Services.

[FR Doc. 2010–6472 Filed 3–23–10; 8:45 am]

BILLING CODE 7590–01–P

NUCLEAR REGULATORY COMMISSION

[Docket Nos. 50–266 And 50–301; NRC–2010–0123

FPL Energy Point Beach, LLC; Point Beach Nuclear Plant, Units 1 and 2; Environmental Assessment and Finding of No Significant Impact

The U.S. Nuclear Regulatory Commission (NRC) is considering issuance of an Exemption, pursuant to Title 10 of the *Code of Federal Regulations* (10 CFR) Section 73.5, "Specific exemptions," from the implementation date for one new requirement of 10 CFR Part 73, "Physical protection of plants and materials," for Renewed Facility Operating License Nos. DPR–24 and DPR–27, issued to FPL Energy Point Beach, LLC (FPLE, the licensee), for operation of the Point Beach Nuclear Plant, Units 1 and 2 (PBNP), located in Manitowoc County, Wisconsin. Therefore, as required by 10 CFR 51.21, the NRC performed an environmental assessment. Based on the results of the environmental assessment, the NRC is issuing a finding of no significant impact.

Environmental Assessment

Identification of the Proposed Action

The proposed action would exempt PBNP from the required implementation date of March 31, 2010, for one new requirement of 10 CFR Part 73. Specifically, PBNP would be granted an exemption from being in full compliance with a new requirement contained in 10 CFR 73.55 by the March 31, 2010, deadline. FPLE has proposed an alternate full compliance implementation date of May 28, 2010, approximately 2 months beyond the date required by 10 CFR Part 73. The proposed action, an extension of the schedule for completion of one action required by the revised 10 CFR Part 73, does not involve any physical changes to the reactor, fuel, plant structures,

support structures, water, or land at the PBNP site.

The proposed action is in accordance with the licensee's application dated February 26, 2010, which was superseded by letter dated March 11, 2010.

The Need for the Proposed Action

The proposed action is needed to provide the licensee with additional time to perform the required upgrades to the PBNP security system due to unforeseen circumstances such as adverse weather, material delivery and testing constraints.

Environmental Impacts of the Proposed Action

The NRC has completed its environmental assessment of the proposed exemption. The staff has concluded that the proposed action to extend the implementation deadline would not significantly affect plant safety and would not have a significant adverse effect on the probability of an accident occurring.

The proposed action would not result in an increased radiological hazard beyond those previously analyzed in the environmental assessment and finding of no significant impact made by the Commission in promulgating its revisions to 10 CFR Part 73 as discussed in a **Federal Register** notice dated March 27, 2009 (74 FR 13967). There will be no change to radioactive effluents that affect radiation exposures to plant workers and members of the public. Therefore, no changes or different types of radiological impacts are expected as a result of the proposed exemption.

The proposed action does not result in changes to land use or water use, or result in changes to the quality or quantity of non-radiological effluents. No changes to the National Pollution Discharge Elimination System permit are needed. No effects on the aquatic or terrestrial habitat in the vicinity of the plant, or to threatened, endangered, or protected species under the Endangered Species Act, or impacts to essential fish habitat covered by the Magnuson-Steven's Act are expected. There are no impacts to the air or ambient air quality. There are no impacts to historical and cultural resources. There would be no impact to socioeconomic resources. Therefore, no changes to or different types of non-radiological environmental impacts are expected as a result of the proposed exemption.

Accordingly, the NRC concludes that there are no significant environmental impacts associated with the proposed action. In addition, in promulgating its revisions to 10 CFR Part 73, the Commission prepared an environmental assessment and published a finding of no significant impact [Part 73, Power Reactor Security Requirements, 74 FR 13926, 13967 (March 27, 2009)].

The NRC staff's safety evaluation will be provided in the exemption that will be issued as part of the letter to the licensee approving the exemption to the regulation, if granted.

Environmental Impacts of the Alternatives to the Proposed Action

As an alternative to the proposed action, the NRC staff considered denial of the proposed action (*i.e.,* the "no-action" alternative). Denial of the exemption request would result in no change in current environmental impacts. If the proposed action was denied, the licensee would have to comply with the March 31, 2010, implementation deadline. The environmental impacts of the proposed exemption and the "no action" alternative are similar.

Alternative Use of Resources

The action does not involve the use of any different resources than those considered in the Final Environmental Statement for PBNP, dated May 1972 and in NUREG–1437, Supplement 23, "Generic Environmental Impact Statement for License Renewal of Nuclear Plants [regarding Point Beach Nuclear Plant, Units 1 and 2]," dated August 2005.

Agencies and Persons Consulted

In accordance with its stated policy, on March 12, 2010, the NRC staff consulted with the Wisconsin State official, Jeff Kitsembel, regarding the environmental impact of the proposed action. The State official had no comments.

Finding of No Significant Impact

On the basis of the environmental assessment, the NRC concludes that the proposed action will not have a significant effect on the quality of the human environment. Accordingly, the NRC has determined not to prepare an environmental impact statement for the proposed action.

For further details with respect to the proposed action, see the licensee's letter dated March 11, 2010. Portions of the document contain security-related information and, accordingly, are not available to the public. Other parts of the document may be examined, and/or copied for a fee, at the NRC's Public Document Room (PDR), located at One White Flint North, Public File Area O–1F21, 11555 Rockville Pike (first floor), Rockville, Maryland 20852. Publicly available records will be accessible electronically from the Agencywide Document Access and Management System (ADAMS) Public Electronic Reading Room on the Internet at the NRC Web site: *http://www.nrc.gov/reading-rm/adams.html.*

Persons who do not have access to ADAMS or who encounter problems in accessing the document located in ADAMS should contact the NRC PDR Reference staff by telephone at 1–800–397–4209 or 301–415–4737, or send an e-mail to *pdr.resource@nrc.gov.*

Dated at Rockville, Maryland, this 17th day of March, 2010.

For the Nuclear Regulatory Commission.

Justin C. Poole,

Project Manager, Plant Licensing Branch III–1, Division of Operating Reactor Licensing, Office of Nuclear Reactor Regulation.

[FR Doc. 2010–6473 Filed 3–23–10; 8:45 am]

BILLING CODE 7590–01–P

NUCLEAR REGULATORY COMMISSION

[Docket No. 52–017; NRC–2008–0149]

Virginia Electric and Power Company d/b/a/Dominion Virginia Power, and Old Dominion Electric Cooperative; Notice of Availability of the Final Supplemental Environmental Impact Statement for North Anna Power Station Unit 3 Combined License Application

Notice is hereby given that the U.S. Nuclear Regulatory Commission (NRC) has published a final Supplemental Environmental Impact Statement (SEIS), NUREG–1917, for the North Anna, Unit 3 Combined License (COL) application. The SEIS is a supplement to the Environmental Impact Statement (EIS) for an Early Site Permit (ESP) at the North Anna ESP Site, NUREG–1811, dated December 2006. The North Anna Site is located near the Town of Mineral in Louisa County, VA, on the southern shore of Lake Anna. A notice of availability of the draft SEIS was published in the **Federal Register** on December 24, 2008 (73 FR 79196). The purpose of this notice is to inform the public that the final SEIS, NUREG–1917 for the North Anna, Unit 3 COL application is available for public inspection in the NRC Public Document Room (PDR) located at One White Flint North, 11555 Rockville Pike (First Floor), Rockville, MD 20852 or from the Publicly Available Records (PARS) component of NRC Agencywide Documents Access and Management System (ADAMS). ADAMS is accessible

from the NRC Web site at *http://www.nrc.gov/reading-rm/adams.html* which provides access through the NRC Electronic Reading Room link. The accession number in ADAMS for the final SEIS, NUREG–1917 is ML100680117. Persons who do not have access to ADAMS or who encounter problems in accessing the documents located in ADAMS should contact the PDR reference staff by telephone at 1–800–397–4209 and 1–301–415–4737 or by sending an e-mail to *pdr.resource@nrc.gov*. The final SEIS may also be viewed on the Internet at: *http://www.nrc.gov/reactors/new-reactors/col/north-anna.html*. In addition, the following public libraries in the vicinity of the North Anna Site have agreed to make the final SEIS available for public inspection: Jefferson-Madison Regional Library in Mineral, VA; Hanover Branch Library (Pamunkey) in Hanover, VA; Orange County Library in Orange, VA; Salem Church Library in Fredericksburg, VA; and C. Melvin Snow Memorial Branch Library in Spotsylvania, VA.

For Further Information, Contact: Alicia Williamson, Project Manager, Environmental Projects Branch 1, Division of Site and Environmental Reviews, Office of New Reactors, U.S. Nuclear Regulatory Commission, Washington, DC 20555–0001. Ms. Williamson may be contacted by telephone at 301–415–1878 or by e-mail to *Alicia.Williamson@nrc.gov.*

Dated at Rockville, Maryland, this 17th day of March 2010.

For the Nuclear Regulatory Commission.

Scott Flanders,

Director, Division of Site and Environmental Reviews, Office of New Reactors.

[FR Doc. 2010–6499 Filed 3–23–10; 8:45 am]

BILLING CODE 7590–01–P

NUCLEAR REGULATORY COMMISSION

[Docket No. 50–293; NRC–2010–0094]

Entergy Nuclear Operations, Inc.; Pilgrim Nuclear Power Station; Exemption

1.0 Background

Entergy Nuclear Operations, Inc. (Entergy or the licensee) is the holder of Facility Operating License No. DPR–35, which authorizes operation of the Pilgrim Nuclear Power Station (Pilgrim). The license provides, among other things, that the facility is subject to all rules, regulations, and orders of the Nuclear Regulatory Commission (NRC or the Commission) now or hereafter in effect.

The facility consists of a boiling-water reactor located in Plymouth County, Massachusetts.

2.0 Request/Action

Title 10 of the *Code of Federal Regulations* (10 CFR) Part 73, "Physical protection of plants and materials," Section 73.55, "Requirements for physical protection of licensed activities in nuclear power reactors against radiological sabotage," published March 27, 2009, effective May 26, 2009, with a full implementation date of March 31, 2010, requires licensees to protect, with high assurance, against radiological sabotage by designing and implementing comprehensive site security programs. The amendments to 10 CFR 73.55 published on March 27, 2009, establish and update generically applicable security requirements similar to those previously imposed by Commission Orders issued after the terrorist attacks of September 11, 2001, and implemented by licensees. In addition, the amendments to 10 CFR 73.55 include additional requirements to further enhance site security based upon insights gained from implementation of the post-September 11, 2001, security orders. It is from four of these new requirements that Pilgrim now seeks an exemption from the March 31, 2010, implementation date. All other physical security requirements established by this recent rulemaking have already been or will be implemented by the licensee by March 31, 2010.

By letter dated January 22, 2010, as supplemented by letter dated February 2, 2010, the licensee requested an exemption in accordance with 10 CFR 73.5, "Specific exemptions." The licensee's letters dated January 22, 2010, and February 2,2010, contain security-related information and, accordingly, are not available to the public pursuant to 10 CFR 2.390(d)(1). Publicly available versions of the licensee's submittals are available at Agencywide Documents Access and Management System (ADAMS) accession numbers ML100260716 and ML100351182. The licensee has requested an exemption from the March 31, 2010, compliance date stating that, due to the scope of the design, procurement, and installation activities and in consideration of impediments to construction such as winter weather conditions and equipment delivery schedules, completion of some of the new requirements contained in 10 CFR 73.55 will require additional time beyond March 31, 2010. Specifically, the request to extend the compliance date is for four specific requirements from the current March 31, 2010, deadline to September 15, 2010. Being granted this exemption for the four items would allow the licensee to complete upgrades to its security system necessary for it to be in full compliance with the 10 CFR Part 73 Final Rule.

3.0 Discussion of Part 73 Schedule Exemptions From the March 31, 2010, Full Implementation Date

Pursuant to 10 CFR 73.55(a)(1), "By March 31, 2010, each nuclear power reactor licensee, licensed under 10 CFR Part 50, shall implement the requirements of this section through its Commission-approved Physical Security Plan, Training and Qualification Plan, Safeguards Contingency Plan, and Cyber Security Plan referred to collectively hereafter as 'security plans.'" Pursuant to 10 CFR 73.5, the Commission may, upon application by any interested person or upon its own initiative, grant exemptions from the requirements of 10 CFR Part 73 when the exemptions are authorized by law, and will not endanger life or property or the common defense and security, and are otherwise in the public interest.

This exemption would, as noted above, allow an extension from March 31, 2010, until September 15, 2010, to allow temporary non-compliance with the new rule in four specified areas. As stated above, 10 CFR 73.5 allows the NRC to grant exemptions from the requirements of 10 CFR Part 73. The NRC staff has determined that granting of the licensee's proposed exemption will not result in a violation of the Atomic Energy Act of 1954, as amended, or the Commission's regulations. Therefore, the NRC approval of the licensee's exemption request is authorized by law.

In the draft final power reactor security rule provided to the Commission, the NRC staff proposed that the requirements of the new regulation be met within 180 days. The Commission directed a change from 180 days to approximately 1 year for licensees to fully implement the new requirements. This change was incorporated into the final rule. From this, it is clear that the Commission wanted to provide a reasonable timeframe for licensees to achieve full compliance.

As noted in the final rule, the Commission also anticipated that licensees would have to conduct site-specific analyses to determine what changes were necessary to implement the rule's requirements, and that changes could be accomplished through a variety of licensing mechanisms, including exemptions. Since issuance of

the final rule, the Commission has rejected a request to generically extend the rule's compliance date for all operating nuclear power plants, but noted that the Commission's regulations provide mechanisms for individual licensees, with good cause, to apply for relief from the compliance date (Reference: June 4, 2009, letter from R. W. Borchardt, NRC, to M. S. Fertel, Nuclear Energy Institute). The licensee's request for an exemption is, therefore, consistent with the approach set forth by the Commission and discussed in the June 4, 2009, letter.

Pilgrim Schedule Exemption Request

The licensee provided detailed information in a letter dated January 22, 2010, requesting an exemption, as supplemented by letter dated February 2, 2010. It describes a comprehensive plan including the scope of work such as the design, procurement, and installation activities, consideration of impediments to construction such as winter weather conditions and equipment delivery schedules, and provides a timeline for achieving full compliance with the new regulation. Attachment 1 contains (1) proprietary information regarding the site security plan, (2) details of specific portions of the regulation for which the site cannot be in compliance by the March 31, 2010, deadline and the reasons for the same, (3) the required changes to the site's security configuration, and (4) a timeline with critical path activities that would enable the licensee to achieve full compliance by September 15, 2010. The timeline provides dates indicating when (1) construction will begin on various phases of the project (i.e., new roads, buildings, and fences), (2) outages are scheduled for each unit, and (3) critical equipment will be ordered, installed, tested and become operational.

Notwithstanding the scheduler exemptions requested for these limited requirements, the licensee will continue to be in compliance with all other applicable physical security requirements as described in 10 CFR 73.55 and reflected in its current NRC-approved physical security program. By September 15, 2010, Pilgrim indicated that it will be in full compliance with all the regulatory requirements of 10 CFR 73.55 as issued on March 27, 2009.

4.0 Conclusion for Part 73 Schedule Exemption Request

The NRC staff has reviewed the licensee's submittals and concludes that the licensee has justified its request for an extension of the compliance date with regard to four specified requirements of 10 CFR 73.55 to September 15, 2010.

Accordingly, the Commission has determined that pursuant to 10 CFR 73.5, "Specific exemptions," an exemption from the March 31, 2010, compliance date is authorized by law and will not endanger life or property or the common defense and security, and is otherwise in the public interest. Therefore, the Commission hereby grants the requested exemption.

The NRC staff has determined that the long-term benefits that will be realized when the design, procurement, and installation activities are complete, justifies extending the full compliance date in the case of this particular licensee. The security measures Pilgrim needs additional time to implement are new requirements imposed by March 27, 2009, amendments to 10 CFR 73.55, and are in addition to those required by the security Orders issued in response to the events of September 11, 2001. Therefore, the NRC has concluded that the licensee's actions are in the best interest of protecting the public health and safety through the security changes that will result from granting this exemption.

As per the licensee's request and the NRC's regulatory authority to grant an exemption from the March 31, 2010, deadline for the four items specified in the licensee's letter dated January 22, 2010, as supplemented by letter dated February 2, 2010, the licensee is required to be in full compliance with the provisions of 10 CFR 73.55 by September 15, 2010. In achieving compliance, the licensee is reminded that it is responsible for determining the appropriate licensing mechanism (*i.e.,* 10 CFR 50.54(p) or 10 CFR 50.90) for incorporation of all necessary changes to its security plans.

Pursuant to 10 CFR 51.32, "Finding of no significant impact," the Commission has previously determined that the granting of this exemption will not have a significant effect on the quality of the human environment (75 FR 11205; dated March 10, 2010).

This exemption is effective upon issuance.

Dated at Rockville, Maryland, this 16th day of March 2010. For the Nuclear Regulatory Commission.

Joseph G. Giitter,

Director, Division of Operating Reactor Licensing, Office of Nuclear Reactor Regulation.

[FR Doc. 2010–6496 Filed 3–23–10; 8:45 am]

BILLING CODE 7590–01–P

NUCLEAR REGULATORY COMMISSION

[Docket No. 50–271; NRC–2010–0100]

Entergy Nuclear Operations, Inc.; Vermont Yankee Nuclear Power Station; Exemption

1.0 Background

Entergy Nuclear Operations, Inc. (Entergy or the licensee) is the holder of Facility Operating License No. DPR–28, which authorizes operation of the Vermont Yankee Nuclear Power Station (VY). The license provides, among other things, that the facility is subject to all rules, regulations, and orders of the Nuclear Regulatory Commission (NRC or the Commission) now or hereafter in effect.

The facility consists of a boiling-water reactor located in Windham County, Vermont.

2.0 Request/Action

Title 10 of the *Code of Federal Regulations* (10 CFR) Part 73, "Physical protection of plants and materials," Section 73.55, "Requirements for physical protection of licensed activities in nuclear power reactors against radiological sabotage," published March 27, 2009, effective May 26, 2009, with a full implementation date of March 31, 2010, requires licensees to protect, with high assurance, against radiological sabotage by designing and implementing comprehensive site security programs. The amendments to 10 CFR 73.55 published on March 27, 2009, establish and update generically applicable security requirements similar to those previously imposed by Commission Orders issued after the terrorist attacks of September 11, 2001, and implemented by licensees. In addition, the amendments to 10 CFR 73.55 include additional requirements to further enhance site security based upon insights gained from implementation of the post-September 11, 2001, security Orders. It is from five of these new requirements that VY now seeks an exemption from the March 31, 2010, implementation date. All other physical security requirements established by this recent rulemaking have already been or will be implemented by the licensee by March 31, 2010.

By letter dated January 21, 2010, as supplemented by letter dated February 17, 2010, the licensee requested an exemption in accordance with 10 CFR 73.5, "Specific exemptions." The licensee's letter dated January 21, 2010, contains security sensitive information and, accordingly, is not available to the

public. The licensee has requested an exemption from the March 31, 2010, compliance date stating that, due to the scope of the design, procurement, and installation activities and in consideration of impediments to construction such as winter weather conditions and equipment delivery schedules, completion of some of the activities to meet the new requirements contained in 10 CFR 73.55 will require additional time beyond March 31, 2010. Specifically, the request to extend the compliance date is for five specific requirements from the current March 31, 2010, deadline to September 20, 2010. Being granted this exemption for the five items would allow the licensee to be in full compliance with the 10 CFR Part 73 Final Rule.

3.0 Discussion of Part 73 Schedule Exemptions From the March 31, 2010, Full Implementation Date

Pursuant to 10 CFR 73.55(a)(1), "By March 31, 2010, each nuclear power reactor licensee, licensed under 10 CFR Part 50, shall implement the requirements of this section through its Commission-approved Physical Security Plan, Training and Qualification Plan, Safeguards Contingency Plan, and Cyber Security Plan referred to collectively hereafter as 'security plans.' " Pursuant to 10 CFR 73.5, the Commission may, upon application by any interested person or upon its own initiative, grant exemptions from the requirements of 10 CFR Part 73 when the exemptions are authorized by law, and will not endanger life or property or the common defense and security, and are otherwise in the public interest.

The NRC approval of this exemption, as noted above, would allow an extension from March 31, 2010, until September 20, 2010, with the new rule in five specified areas. The NRC staff has determined that granting of the licensee's proposed exemption would not result in a violation of the Atomic Energy Act of 1954, as amended, or the Commission's regulations. Therefore, NRC approval of the licensee's exemption request is authorized by law.

In the draft final power reactor security rule provided to the Commission, the NRC staff proposed that the requirements of the new regulation be met within 180 days. The Commission directed a change from 180 days to approximately 1 year for licensees to fully implement the new requirements. This change was incorporated into the final rule. From this, it is clear that the Commission wanted to provide a reasonable timeframe for licensees to achieve full compliance.

As noted in the final rule, the Commission also anticipated that licensees would have to conduct site specific analyses to determine what changes were necessary to implement the rule's requirements, and that changes could be accomplished through a variety of licensing mechanisms, including exemptions. Since issuance of the final rule, the Commission has rejected a generic industry request to extend the rule's compliance date for all operating nuclear power plants, but noted that the Commission's regulations provide mechanisms for individual licensees, with good cause, to apply for relief from the compliance date (Reference: June 4, 2009, letter from R.W. Borchardt, NRC, to M.S. Fertel, Nuclear Energy Institute). The licensee's request for an exemption is, therefore, consistent with the approach set forth by the Commission and discussed in the June 4, 2009, letter.

Vermont Yankee Schedule Exemption Request

The licensee provided detailed information in a letter dated January 21, 2010, requesting an exemption, as supplemented by letter dated February 17, 2010. The exemption request describes a comprehensive plan to implement certain new security measures including design, procurement, and installation activities consideration of impediments to construction such as winter weather conditions and equipment delivery schedules and provides a timeline for achieving full compliance with the new regulation. Attachment 1 of the letter dated January 21, 2010, contains (1) proprietary information regarding the site security plan, (2) details of specific portions of the regulation for which the site cannot be in compliance by the March 31, 2010, deadline and the reasons for the same, (3) the required changes to the site's security configuration, and (4) a timeline with critical path activities that would enable the licensee to achieve full compliance by September 20, 2010. The timeline provides dates indicating when (1) construction will begin on various phases of the project (i.e., new roads, buildings, and fences), (2) outages are scheduled for each unit, and (3) critical equipment will be ordered, installed, tested and become operational.

Notwithstanding the scheduler exemptions for these limited requirements, the licensee will continue to be in compliance with all other applicable physical security requirements as described in 10 CFR 73.55 and reflected in its current NRC-approved physical security program. By September 20, 2010, VY would be in full compliance with all the regulatory requirements of 10 CFR 73.55, as issued on March 27, 2009.

4.0 Conclusion for Part 73 Schedule Exemption Request

The NRC staff has reviewed the licensee's submittals and concludes that the licensee has justified its request for an extension of the compliance date with regard to five specified requirements of 10 CFR 73.55 to September 20, 2010.

Accordingly, the Commission has determined that pursuant to 10 CFR 73.5, "Specific exemptions," an exemption from the March 31, 2010, compliance date is authorized by law and will not endanger life or property or the common defense and security, and is otherwise in the public interest. Therefore, the Commission hereby grants the requested exemption.

The NRC staff has determined that the long-term benefits that will be realized when the design, procurement, and installation activities are complete, justifies extending the full compliance date in the case of this particular licensee. The security measures VY needs additional time to implement are new requirements imposed by March 27, 2009, amendments to 10 CFR 73.55, and are in addition to those required by the security orders issued in response to the events of September 11, 2001. Therefore, the NRC concluded that the licensee's actions are in the best interest of protecting the public health and safety through the security changes that will result from granting this exemption.

As per the licensee's request and the NRC's regulatory authority to grant an exemption from the March 31, 2010, deadline for the five items specified in the licensee's letter dated January 21, 2010, as supplemented by letter dated February 17, 2010, the licensee is required to be in full compliance by September 20, 2010. In achieving compliance, the licensee is reminded that it is responsible for determining the appropriate licensing mechanism (*i.e.,* 10 CFR 50.54(p) or 10 CFR 50.90) for incorporation of all necessary changes to its security plans.

Pursuant to 10 CFR 51.32, "Finding of no significant impact," the Commission has previously determined that the granting of this exemption will not have a significant effect on the quality of the human environment (75 FR 12311; dated March 15, 2010).

This exemption is effective upon issuance.

Dated at Rockville, Maryland, this 16th day of March 2010.

For the Nuclear Regulatory Commission.

Joseph G. Giitter,

Director, Division of Operating Reactor Licensing, Office of Nuclear Reactor Regulation.

[FR Doc. 2010–6511 Filed 3–23–10; 8:45 am]

BILLING CODE 7590–01–P

NUCLEAR REGULATORY COMMISSION

[Docket Nos. 50–361 and 50–362; NRC–2010–0101]

Southern California Edison, San Onofre Nuclear Generating Station, Unit 2 and Unit 3; Exemption

1.0 Background

Southern California Edison (SCE, the licensee) is the holder of the Facility Operating License Nos. NPF–10 and NPF–15, which authorize operation of the San Onofre Nuclear Generating Station (SONGS), Unit 2 and Unit 3, respectively. The licenses provide, among other things, that the facility is subject to all rules, regulations, and orders of the U.S. Nuclear Regulatory Commission (NRC or the Commission) now or hereafter in effect.

The facility consists of two pressurized-water reactors located in San Diego County, California.

2.0 Request/Action

Title 10 of the *Code of Federal Regulations* (10 CFR) Part 73, "Physical protection of plants and materials," Section 73.55, "Requirements for physical protection of licensed activities in nuclear power reactors against radiological sabotage," published in the **Federal Register** on March 27, 2009, effective May 26, 2009, with a full implementation date of March 31, 2010, requires licensees to protect, with high assurance, against radiological sabotage by designing and implementing comprehensive site security programs. The amendments to 10 CFR 73.55 published on March 27, 2009 (74 FR 13926), establish and update generically applicable security requirements similar to those previously imposed by Commission orders issued after the terrorist attacks on September 11, 2001, and implemented by the licensees. In addition, the amendments to 10 CFR 73.55 include additional requirements to further enhance site security based upon insights gained from implementation of the post September 11, 2001, security orders. It is from two of these additional requirements that SCE now seeks an exemption from the March 31, 2010, implementation date. All other physical security requirements established by this recent rulemaking have already been or will be implemented by the licensee by March 31, 2010.

By letter dated December 17, 2009, the licensee requested an exemption in accordance with 10 CFR 73.5, "Specific exemptions." Portions of the December 17, 2009, submittal contain security-related and safeguards information and, accordingly, a redacted version of the December 17, 2009, letter was also submitted by the licensee on December 17, 2009 (Agencywide Documents Access and Management System (ADAMS) Accession No. ML093570268). This redacted version is available to the public. The licensee has requested an exemption from the March 31, 2010, implementation date stating that a number of issues will present a significant challenge to the timely completion of the projects related to certain specific requirements in 10 CFR 73. Specifically, the request is to extend the implementation date from the current March 31, 2010, deadline to October 31, 2010, for one specific requirement, and to January 31, 2011, for a second specific requirement. Granting this exemption for the two items would allow the licensee to complete the modifications designed to update aging equipment and incorporate state-of-the-art technology to meet the noted regulatory requirements.

3.0 Discussion of Part 73 Schedule Exemptions from the March 31, 2010, Full Implementation Date

Pursuant to 10 CFR 73.55(a)(1), "By March 31, 2010, each nuclear power reactor licensee, licensed under 10 CFR Part 50, shall implement the requirements of this section through its Commission-approved Physical Security Plan, Training and Qualification Plan, Safeguards Contingency Plan, and Cyber Security Plan referred to collectively hereafter as 'security plans.'" Pursuant to 10 CFR 73.5, the Commission may, upon application by any interested person or upon its own initiative, grant exemptions from the requirements of 10 CFR Part 73 when the exemptions are authorized by law, and will not endanger life or property or the common defense and security, and are otherwise in the public interest.

NRC approval of this exemption, as noted above, would allow an extension of the implementation date from March 31, 2010, until October 31, 2010, and January 31, 2011, for two specific requirements of the new rule. As stated above, 10 CFR 73.5 allows the NRC to grant exemptions from the requirements of 10 CFR Part 73. The NRC staff has determined that granting the licensee's proposed exemption would not result in a violation of the Atomic Energy Act of 1954, as amended, or the Commission's regulations. Therefore, the exemption is authorized by law.

In the draft final power reactor security rule provided to the Commission, the NRC staff proposed that the requirements of the new regulation be met within 180 days. The Commission directed a change from 180 days to approximately 1 year for licensees to fully implement the new requirements. This change was incorporated into the final rule. From this, it is clear that the Commission wanted to provide a reasonable timeframe for licensees to achieve full compliance.

As noted in the final rule, the Commission also anticipated that licensees would have to conduct site-specific analyses to determine what changes were necessary to implement the rule's requirements, and that changes could be accomplished through a variety of licensing mechanisms, including exemptions. Since issuance of the final rule, the Commission has rejected a generic industry request to extend the rule's compliance date for all operating nuclear power plants, but noted that the Commission's regulations provide mechanisms for individual licensees, with good cause, to apply for relief from the compliance date as documented in a letter from R. W. Borchardt, (NRC), to M. S. Fertel, (Nuclear Energy Institute) dated June 4, 2009. The licensee's request for an exemption is therefore consistent with the approach set forth by the Commission and discussed in the June 4, 2009, letter.

SONGS Schedule Exemption Request

The licensee provided detailed information in Enclosure 1 to its letter dated December 17, 2009, requesting an exemption. In that letter, the licensee described a comprehensive plan to study, design, construct, test, and turn over the new equipment for the enhancement of the security capabilities at the SONGS site and provides a timeline for achieving full compliance with the new regulation. Enclosure 1 of the application dated December 17, 2009, contains security-related and safeguards information regarding the site security plan, details of the specific requirements of the regulation for which the site cannot achieve compliance by the March 31, 2010, deadline, justification for the extension request, a description of the required changes to the site's security configuration, and a timeline with critical path activities that would enable the licensee to achieve full compliance by January 31, 2011.

The timeline provides dates indicating when (1) construction will begin on various phases of the project, (2) outages are scheduled for each unit, and (3) critical equipment will be ordered, installed, tested and become operational.

Notwithstanding the schedule exemptions for these limited requirements, the licensee would continue to be in compliance with all other applicable physical security requirements, as described in 10 CFR 73.55 and reflected in its current NRC-approved physical security program. By January 31, 2011, SONGS would be in full compliance with the regulatory requirements of 10 CFR 73.55, as issued on March 27, 2009.

4.0 Conclusion for Part 73 Schedule Exemption Request

The staff has reviewed the licensee's submittal and concludes that the licensee has provided adequate justification for its request for an extension of the compliance dates to October 31, 2010, and to January 31, 2011, for two specified requirements.

Accordingly, the Commission has determined that pursuant to 10 CFR 73.5, "Specific exemptions," an exemption from the March 31, 2010, compliance date is authorized by law and will not endanger life or property or the common defense and security, and is otherwise in the public interest. Therefore, the Commission hereby grants the requested exemption.

The NRC staff has determined that the long-term benefits that will be realized when the SONGS security modifications are completed justifies exceeding the full compliance date with regard to the specified requirements of 10 CFR 73.55. The significant security enhancements SONGS needs additional time to complete are new requirements imposed by March 27, 2009, amendments to 10 CFR 73.55, and are in addition to those required by the security orders issued in response to the events of September 11, 2001. Therefore, the NRC concludes that the licensee's actions are in the best interest of protecting the public health and safety through the security changes that will result from granting this exemption.

As per the licensee's request and the NRC's regulatory authority to grant an exemption from the March 31, 2010, deadline for the two items specified in Enclosure 1 of SCE's letter dated December 17, 2009, the licensee is required to be in full compliance by January 31, 2011. In achieving compliance, the licensee is reminded that it is responsible for determining the appropriate licensing mechanism (*i.e.,* 10 CFR 50.54(p) or 10 CFR 50.90) for incorporation of all necessary changes to its security plans.

Pursuant to 10 CFR 51.32, "Finding of no significant impact," the Commission has previously determined that the granting of this exemption will not have a significant effect on the quality of the human environment (75 FR 12580; dated March 16, 2010).

This exemption is effective upon issuance.

Dated at Rockville, Maryland, this 16th day of March 2010.

For the Nuclear Regulatory Commission.

Joseph G. Giitter,

Director, Division of Operating Reactor Licensing, Office of Nuclear Reactor Regulation.

[FR Doc. 2010–6492 Filed 3–23–10; 8:45 am]

BILLING CODE 7590–01–P

NUCLEAR REGULATORY COMMISSION

[NRC–2010–0122]

Proposed Generic Communications; Applicability of 10 CFR Part 21 Requirements to Applicants for Standard Design Certifications

AGENCY: Nuclear Regulatory Commission.

ACTION: Notice of opportunity for public comment.

SUMMARY: The U.S. Nuclear Regulatory Commission (NRC) is issuing this regulatory issue summary (RIS) to clarify the agency's regulatory position regarding the applicability of 10 CFR Part 21 requirements to standard design certification or design certification rule (DCR) applicants (hereafter referred to as DCR applicants) before and after the DCR is issued by the NRC. This RIS requires no action or written response on the part of addressees.

DATES: Comment period expires May 10, 2010. Comments submitted after this date will be considered if it is practical to do so, but assurance of consideration cannot be given except for comments received on or before this date.

ADDRESSES: Submit written comments to the Chief, Rulemaking and Directives Branch, Division of Administrative Services, Office of Administration, U.S. Nuclear Regulatory Commission, Mail Stop TWB–05–B01M, Washington, DC 20555–0001, and cite the publication date and page number of this **Federal Register** notice.

FOR FURTHER INFORMATION, CONTACT: Milton Concepcion, at 301–415–4054 or by e-mail at *Milton.Concepcion@nrc.gov.*

SUPPLEMENTARY INFORMATION:

NRC Regulatory Issue Summary 2010–XX

Applicability of 10 CFR Part 21 Requirements to Applicants for Standard Design Certifications

Addressees

All holders of and applicants for an early site permit, combined operating license (COL), manufacturing license, and standard design approval; and applicants for a standard design certification under the provisions of Title 10 of the Code of Federal Regulations (10 CFR) Part 52, "Licenses, Certifications, and Approvals for Nuclear Power Plants."

Intent

The U.S. Nuclear Regulatory Commission (NRC) is issuing this regulatory issue summary (RIS) to clarify the agency's regulatory position regarding the applicability of 10 CFR Part 21 requirements to standard design certification or design certification rule (DCR) applicants (hereafter referred to as DCR applicants) before and after the DCR is issued by the NRC. This RIS requires no action or written response on the part of addressees.

Background

The regulations in 10 CFR Part 21 establish procedures and requirements for implementation of Section 206 of the Energy Reorganization Act (ERA) of 1974, as amended. Section 206 applies to any individual or responsible officer of a firm "constructing, owning, operating, or supplying the components of any facility or activity which is licensed or otherwise regulated" by the NRC.

The statements of consideration that accompanied the final rule for 10 CFR Part 52 (3150–AG24), published in the **Federal Register** on August 28, 2007 (72 FR 49352), clarified the applicability of various requirements to each of the licensing processes in 10 CFR Part 52, including how Section 206 reporting requirements and, therefore, the provisions of 10 CFR Part 21, should be extended to early site permits, standard design certifications, and combined licenses. As indicated in the statements of consideration for the 2007 conforming changes to 10 CFR Part 52 Final Rule; the NRC's reporting requirements in 10 CFR Part 21, as applicable to Part 52 licensing and approval processes, are consistent with three key principles as described below.

The first principle ensures that the regulatory requirements of Section 206 of the ERA extend throughout the entire

"regulatory life" of a standard design certification. The NRC considers "regulatory life" as the period of time in which a standard design certification needs to meet the regulations in effect. This period begins when an application is docketed and ends at the later of: (1) The termination or expiration of the standard design certification; or (2) the termination or expiration of the last license, directly or indirectly, referencing the standard design certification. Section 206 of the ERA applies whenever necessary to support effective NRC decision-making and regulatory oversight of the referencing licenses and regulatory approvals.

The second principle ensures that the NRC, its licensees, and license applicants receive information on defects or failures to comply at the time when the information would be most useful to: (1) The NRC in carrying out its regulatory responsibilities, and (2) the licensee or applicant when engaging in activities regulated by the NRC. Under the 10 CFR Part 52 licensing process, the NRC requires immediate reporting throughout the period of pendency of an application, be it for a license or a standard design certification. This reporting obligation must be extended to contractors and subcontractors supporting an application with services that are basic components (*i.e.,* safety-related) and could be relied upon in the siting, design, and construction of a nuclear power plant. However, the NRC considers that DCR applicants may delay the reporting of a defect or failure to comply if there is no immediate consequence or regulatory interest in prompt reporting. For those Part 52 processes (*e.g.,* early site permits, design approvals, and design certifications) which do not authorize continuing activities required to be licensed under the Atomic Energy Act or the ERA, but are intended solely to provide early identification and resolution of issues in subsequent licensing or regulatory approvals, the reporting of defects or failures to comply associated with substantial safety hazards may be delayed until the time that the Part 52 process is first referenced. After referencing, the DCR applicant must make the necessary notifications to the NRC as well as provide the necessary corrections to the final design.

The third principle ensures that entities conducting activities under 10 CFR Part 52 accurately fulfill their reporting obligation in a timely manner with the development and implementation of procedures and practices. This principle is consistent with the current requirements in 10 CFR Part 21 in that licensees, license applicants, and other entities seeking a design certification must have contractual provisions with their contractors, subcontractors, consultants, and other suppliers which notify them that they are subject to the NRC's regulatory requirements on reporting and the development and implementation of reporting procedures.

Summary of Issues

Based on questions raised by applicants for combined licenses and design certifications, the NRC staff developed this RIS to clarify the NRC's position on how and when a DCR applicant notifies the NRC of a defect or failure to comply in order to meet the notification requirements established in 10 CFR Part 21.

Issue 1: Under 10 CFR Part 21, when does a DCR applicant have to notify the NRC of "Part 21 defects or failures to comply" on information provided in a COL application that referenced the DCR applicant's certified design?

The DCR applicant has a current obligation under 10 CFR Part 21 to report to the NRC any identified defect or failure to comply within its scope of supply that could create a substantial safety hazard. This obligation exists even if the COL applicant did not actually contract with the DCR applicant to provide further design and engineering for the standard design certification. As stated in the second key principle of reporting under Section 206 of the ERA, the reporting obligation of a DCR applicant under 10 CFR Part 21 continues until the termination or expiration of the standard design certification; or until the termination or expiration of the last license referencing the DCR applicant's design certification.

Issue 2: If a DCR applicant states that it addressed all potential 10 CFR Part 21 defects in a recent revision of the Design Control Document (DCD) or in a COL application that references the DCD, does it also have to make a specific 10 CFR Part 21 notification to the NRC, or can it assert that the NRC has been adequately informed about the defects?

A DCD revision by itself does not satisfy the reporting requirements of Part 21. 10 CFR 21.21(d)(3) and 10 CFR 21.21(d)(4) set forth the form and content of the required notification. Consistent with the second principle of reporting under Section 206 of the ERA, if the referenced revision to the DCD or COL application did not include the information required by 10 CFR Part 21, then the reporting requirement has not been satisfied.

Issue 3: If issues identified in a standard design certification rise to the level of a 10 CFR Part 21 notification, does the DCR applicant have to notify a COL applicant or holder referencing that design certification in addition to the NRC, even though the DCR applicant no longer has a contract with the COL applicant?

The DCR applicant is required to notify a COL applicant or holder only if (1) the DCR applicant either has or had a contract with the referencing COL applicant/holder and (2) the DCR applicant has identified a deviation or failure to comply with its design certification and it does not have the capability to determine if it is a defect or failure to comply as defined in 10 CFR Part 21. If the DCR applicant is unable to determine whether the deviation is a defect or failure to comply, then it must inform the COL applicant or holder referencing the design certification of the identified deviation or failure to comply in accordance with § 21.21(b). This is consistent with the third principle. The notification must be provided within five working days of this determination so that the affected entities may evaluate the deviation or failure to comply.

However, if the DCR applicant has determined that the deviation constitutes a defect or failure to comply, then the applicant need only report the defect or failure to comply to the NRC under § 21.21(d). The DCR applicant should consider whether notification to purchasers (even if there is no longer a contract in effect with the purchasers) needs to be part of the corrective action that the supplier is required to describe in the notification to the NRC under 10 CFR 21.21(d)(4)(vii) and 10 CFR 21.21(d)(4)(viii).

Issue 4: Does the COL applicant or holder have to notify the DCR applicant of any deviation, defect, or failure to comply that it finds even if there is no contract between the COL applicant and the DCR applicant?

No. The COL applicant does not have a duty under 10 CFR Part 21 or 10 CFR 50.55(e) to notify the DCR applicant of any deviation, defect, or failure to comply that the COL applicant finds in the certified or approved standard design. In this circumstance, the COL applicant is not supplying a basic component to the DCR applicant. Consistent with the third principle, the COL applicant's only duty under Part 21 or 10 CFR 50.55(e) is to notify the NRC of the defect or failure to comply.

Backfit Discussion

This RIS provides regulatory clarification on information collection and reporting requirements in 10 CFR Part 21. Information collection and

reporting requirements are not subject to the provisions of the Backfit Rule, 10 CFR Part 50.109 or comparable backfitting requirements in 10 CFR Part 52. In addition, this RIS does not present a new or different staff position about the implementation of 10 CFR Part 21, "Reporting of Defects and Noncompliance," within the definition of "backfitting" in either the Backfit Rule or comparable provisions in Part 52. The staff positions for this RIS are either taken from, or represent the logical extension of, the discussion of Part 21 obligations for design certification applicants presented in the statement of considerations that accompanied the final rule (3150–AG24) for Part 52 (72 FR 49352; August 28, 2007).

This RIS requires no action or written response by addressees. Any action that addressees take to implement changes to their 10 CFR Part 21 programs in accordance with the clarifications in this RIS is strictly voluntary, and therefore does not constitute backfitting. For these reasons, the Backfit Rule does not apply and a backfit analysis is not required for issuance of this RIS.

Federal Register Notification

To be done after the public comment period.

Congressional Review Act

This RIS is a rule as designated in the Congressional Review Act (5 U.S.C. 801–808). The Office of Management and Budget (OMB) has determined this is not a major rule.

Paperwork Reduction Act Statement

This RIS does not contain new or amended information collection requirements subject to the Paperwork Reduction Act of 1995 (44 U.S.C. 3501 *et seq.*). Existing information collection requirements were approved by the OMB, control numbers 3150–0035, 3150–0011 and 3150–0151.

Public Protection Notification

The NRC may not conduct or sponsor, and a person is not required to respond to, a request for information or an information collection requirement unless the requesting document displays a currently valid OMB control number.

Contact

Please direct any questions about this matter to Milton Concepcion, at 301–415–4054 or by e-mail at *Milton.Concepcion@nrc.gov.*

End of Draft Regulatory Issue Summary

Documents may be examined, and/or copied for a fee, at the NRC's Public Document Room at One White Flint North, 11555 Rockville Pike (First Floor), Rockville, Maryland. Publicly available records will be accessible electronically from the Agencywide Documents Access and Management System (ADAMS) Public Electronic Reading Room on the Internet at the NRC Web site, *http://www.nrc.gov/NRC/ADAMS/index.html.* If you do not have access to ADAMS or if you have problems accessing the documents in ADAMS, contact the NRC Public Document Room (PDR) reference staff at 1–800–397–4209 or 301–415–4737 or by e-mail to *pdr@nrc.gov.*

Dated at Rockville, Maryland, this 18th day of March 2010.

For the Nuclear Regulatory Commission.

Martin C. Murphy,

Chief, Generic Communications Branch, Division of Policy and Rulemaking, Office of Nuclear Reactor Regulation.

[FR Doc. 2010–6500 Filed 3–23–10; 8:45 am]

BILLING CODE 7590–01–P

OCCUPATIONAL SAFETY AND HEALTH REVIEW COMMISSION

Senior Executive Service Performance Review Board Membership

AGENCY: Occupational Safety and Health Review Commission.

ACTION: Annual notice.

SUMMARY: Notice is given under 5 U.S.C. 4314(c)(4) of the appointment of members to the Performance Review Board (PRB) of the Occupational Safety and Health Review Commission.

DATES: Membership is effective on June 22, 2010.

FOR FURTHER INFORMATION CONTACT: Debra A. Hall, Deputy Executive Director, U.S. Occupational Safety and Health Review Commission, 1120 20th Street, NW., Washington, DC 20036, (202) 606–5397.

SUPPLEMENTARY INFORMATION: The Review Commission, as required by 5 U.S.C. 4314(c)(1) through (5), has established a Senior Executive Service PRB. The PRB reviews and evaluates the initial appraisal of a senior executive's performance by the supervisor, and makes recommendations to the Chairman of the Review Commission regarding performance ratings, performance awards, and pay-for-performance adjustments. In the case of an appraisal of a career appointee, more than half of the members shall consist of career appointees, pursuant to 5 U.S.C. 4314(c)(5). The names and titles of the PRB members are as follows:

- Gary L. Halbert, General Counsel, National Transportation Safety Board;
- Debra A. Carr, Associate Deputy Staff Director, U.S. Commission on Civil Rights;
- Matthew T. Wallen, Director, Office of Public Assistance, Governmental Affairs and Compliance, Surface Transportation Board, U.S. Department of Transportation;

The following executive has been selected to serve as an alternate member of the PRB:

- Lola A. Ward, Director for the Office of Administration, National Transportation Safety Board.

Dated: March 15, 2010.

Thomasina V. Rogers,

Chairman.

[FR Doc. 2010–6531 Filed 3–23–10; 8:45 am]

BILLING CODE 7600–01–P

OFFICE OF PERSONNEL MANAGEMENT

Excepted Service

AGENCY: U.S. Office of Personnel Management (OPM).

ACTION: Notice.

SUMMARY: This gives notice of OPM decisions granting authority to make appointments under Schedules A, B, and C in the excepted service as required by 5 CFR 213.103.

FOR FURTHER INFORMATION CONTACT: Roland Edwards, Senior Executive Resource Services, Employee Services, 202–606–2246.

SUPPLEMENTARY INFORMATION: Appearing in the listing below are the individual authorities established under Schedules A, B, and C between February 1, 2010, and February 28, 2010.

These notices are published monthly in the **Federal Register** at *http://www.gpoaccess.gov/fr/.* A consolidated listing of all authorities as of June 30 is also published each year. The following Schedules are *not* codified in the Code of Federal Regulations. These are agency-specific exceptions.

Schedule A

No Schedule A authorities to report during February 2010.

Schedule B

No Schedule B authorities to report during February 2010.

Schedule C

The following Schedule C appointments were approved during February 2010.

Office of Science and Technology Policy

TSGS10003 Executive Assistant to the President for Science and Technology. Effective February 26, 2010.

Department of State

DSGS70103 Staff Assistant to the Special Advisor, International Disability Rights. Effective February 25, 2010.

Department of the Treasury

DYGS00430 Senior Advisor and Counsel to the Under Secretary for Domestic Finance. Effective February 2, 2010.

DYGS00524 Special Assistant to the Secretary. Effective February 25, 2010.

Department of Defense

DDGS17271 Special Assistant to the Principal Deputy Under Secretary of Defense (Comptroller). Effective February 2, 2010.

DDGS17272 Associate Director to the Director for Joint Communications. Effective February 3, 2010.

Department of the Navy

DNGS09152 Attorney Advisor to the General Counsel. Effective February 1, 2010.

Department of Justice

DJGS00550 Counsel to the Assistant Attorney General, Civil Division. Effective February 16, 2010.

DJGS00556 Speechwriter to the Director, Office of Public Affairs. Effective February 25, 2010.

DJGS00557 Senior Counsel to the Assistant Attorney General Civil Division. Effective February 25, 2010.

DJGS00157 Counsel to the Assistant Attorney General. Effective February 26, 2010.

Department of Homeland SecurityF

DMGS00843 Director of Strategic Communications to the Assistant Secretary for Public Affairs. Effective February 16, 2010.

DMGS00844 Press Secretary to the Assistant Secretary for Public Affairs. Effective February 16, 2010.

DMGS00845 Director of Individual and Community Preparedness to the Deputy Administrator for National Preparedness. Effective February 18, 2010.

Department of the Interior

DIGS01182 Deputy Director to the Director, Congressional and Legislative Affairs. Effective February 16, 2010.

Department of Agriculture

DAGS00735 Staff Assistant to the Assistant Secretary for Congressional Relations. Effective February 4, 2010.

DAGS00119 Senior Advisor for Labor Affairs to the Assistant Secretary for Congressional Relations. Effective February 19, 2010.

DAGS00732 Assistant Chief—West to the Chief of Natural Resources Conservation Service. Effective February 19, 2010.

DAGS00790 Special Assistant to the Administrator. Effective February 22, 2010.

Department of Commerce

DCGS00492 Advance Specialist to the Director of Advance. Effective February 2, 2010.

DCGS00172 Associate Director for Business Development to the National Director, Minority Business Development Agency. Effective February 16, 2010.

DCGS00193 Senior Advisor to the Under Secretary of Commerce for Industry and Security. Effective February 16, 2010.

Department of Labor

DLGS60262 Special Assistant to the Executive Secretary. Effective February 3, 2010.

DLGS60011 Staff Assistant to the Chief Economist. Effective February 17, 2010.

Department of Education

DBGS00584 Deputy White House Liaison to the Chief of Staff. Effective February 4, 2010.

DBGS00335 Confidential Assistant to the Chief of Staff. Effective February 16, 2010.

DBGS00343 Confidential Assistant to the Senior Advisor on Early Learning. Effective February 16, 2010.

DBGS00670 Deputy Director to the Director, White House Initiative on Educational Excellence for Hispanic Americans. Effective February 23, 2010.

Environmental Protection Agency

EPGS08001 Assistant Press Secretary to the Associate Administrator for Public Affairs. Effective February 4, 2010.

EPGS10004 Deputy Assistant Administrator to the Assistant Administrator for Enforcement and Compliance Assurance. Effective February 4, 2010.

Department of Veterans Affairs

DVGS60041 Special Assistant to the Assistant Secretary for Congressional and Legislative Affairs. Effective February 25, 2010.

Securities and Exchange Commission

SEOT60006 Confidential Assistant to the Chairman. Effective February 22, 2010.

SEOT62004 Legislative and Intergovernmental Affairs Specialist to the Chairman. Effective February 22, 2010.

Department of Energy

DEGS00795 Senior Legal Advisor to the General Counsel. Effective February 16, 2010.

DEGS00797 Legal Advisor to the General Counsel. Effective February 16, 2010.

DEGS00799 Economic Recovery Advisor to the Senior Advisor/Director, Office of the American Recovery and Reinvestment Act. Effective February 25, 2010.

Small Business Administration

SBGS00696 Senior Advisor to the Associate Administrator for Government Contracting and Business Development. Effective February 12, 2010.

SBGS00697 Special Assistant to the Chief Operating Officer. Effective February 12, 2010.

SBGS00699 Deputy White House Liaison to the White House Liaison and Deputy Chief of Staff. Effective February 12, 2010.

SBGS00701 Confidential Assistant to the Administrator. Effective February 19, 2010.

SBGS00698 Senior Advisor to the Associate Administrator for Government Contracting and Business Development. Effective February 22, 2010.

General Services Administration

GSGS01424 Regional Administrator to the Administrator. Effective February 23, 2010.

GSGS01422 Regional Administrator to the Administrator. Effective February 25, 2010.

GSGS01428 Regional Administrator to the Administrator. Effective February 25, 2010.

Department of Housing and Urban Development

DUGS60512 Special Assistant to the Chief of Staff. Effective February 17, 2010.

Department of Transportation

DTGS60291 Associate Director for Governmental Affairs. Effective February 4, 2010.

DTGS60279 Director of Speechwriting to the Secretary and Director of Public Affairs. Effective February 25, 2010.

Council on Environmental Quality

EQGS00120 Scheduler to the Chairman (Council on Environmental Quality). Effective February 3, 2010.

Office of Management and Budget

BOGS10010 Confidential Assistant to the Deputy Director, Office of Management and Budget. Effective February 25, 2010.

BOGS10011 Deputy Associate Director (Appropriations) for Legislative Affairs. Effective February 25, 2010.

Authority: 5 U.S.C. 3301 and 3302; E.O. 10577, 3 CFR 1954–1958 Comp., p. 218.

Office of Personnel Management.

John Berry,

Director.

[FR Doc. 2010–6529 Filed 3–23–10; 8:45 am]

BILLING CODE 6325–39–P

SECURITIES AND EXCHANGE COMMISSION

Submission for OMB Review; Comment Request

Upon Written Request, Copies Available From: U.S. Securities and Exchange Commission, Office of Investor Education and Advocacy, Washington, DC 20549–0213.

Extension:

Rule 17g-4; SEC File No. 270–566; OMB Control No. 3235–0627.

Notice is hereby given that, pursuant to the Paperwork Reduction Act of 1995 (44 U.S.C. 3501 *et seq.*), the Securities and Exchange Commission ("Commission") has submitted to the Office of Management and Budget a request for approval of extension of the previously approved collection provided for in Rule 17g–4 (17 CFR 240.17g–4) under the Securities Exchange Act of 1934 (15 U.S.C. 78a *et seq.*) ("Exchange Act").

The Rating Agency Act added a new Section 15E, "Registration of Nationally Recognized Statistical Rating Organizations," [1] to the Exchange Act. Rule 17g–4 requires that a Nationally Recognized Statistical Rating Organization ("NRSRO") has written policies and procedures to prevent the misuse of material nonpublic information including: procedures designed to prevent the inappropriate dissemination of material nonpublic information obtained in connection with the performance of credit rating services; procedures designed to prevent a person associated with the rating organization from trading on material nonpublic information; and procedures designed to prevent the inappropriate dissemination of a pending credit rating.[2]

It is anticipated that 30 credit rating agencies will register with the Commission as NRSROs under Section 15E of the Exchange Act. The Commission estimates that it will take approximately 50 hours for an NRSRO to establish procedures in conformance with Rule 17g–4 for a total one-time burden for the 30 credit rating agencies the Commission estimates will register as NRSROs of 1,500 hours.[3]

An agency may not conduct or sponsor, and a person is not required to respond to, a collection of information unless it displays a currently valid control number.

Comments should be directed to: (i) Desk Officer for the Securities and Exchange Commission Office of Information and Regulatory Affairs, Office of Management and Budget, Room 10102, New Executive Office Building, Washington, DC 20503 or by sending an e-mail to: *Shagufta_Ahmed@omb.eop.gov;* and (ii) Charles Boucher, Director/Chief Information Officer, Securities and Exchange Commission, c/o Shirley Martinson, 6432 General Green Way, Alexandria, Virginia 22312 or send an e-mail to *PRA_Mailbox@sec.gov.* Comments must be submitted to OMB within 30 days of this notice.

Dated: March 17, 2010.

Florence E. Harmon,

Deputy Secretary.

[FR Doc. 2010–6504 Filed 3–23–10; 8:45 am]

BILLING CODE 8011–01–P

SECURITIES AND EXCHANGE COMMISSION

[Rule 15c3–1f; SEC File No. 270–440; OMB Control No. 3235–0496]

Submission for OMB Review; Comment Request

Upon Written Request, Copies Available From: U.S. Securities and Exchange Commission, Office of Investor Education and Advocacy, Washington, DC 20549–0213.

Notice is hereby given that, pursuant to the Paperwork Reduction Act of 1995 (44 U.S.C. 3501 *et seq.*), the Securities and Exchange Commission ("Commission") has submitted to the Office of Management and Budget a request for approval of extension on the previously approved collection of information provided for in the following rule: Appendix F to Rule 15c3–1 ("Appendix F") (17 CFR 240.15c3–1f) under the Securities Exchange Act of 1934 (15 U.S.C. 78a *et seq.*) ("Exchange Act").

Appendix F requires a broker-dealer choosing to register, upon Commission approval, as an OTC derivatives dealer to develop and maintain an internal risk management system based on Value-at-Risk ("VaR") models. Appendix F also requires the OTC derivatives dealer to notify Commission staff of the system and of certain other periodic information including when the VaR model deviates from the actual performance of the OTC derivatives dealer's portfolio. It is anticipated that a total of five (5) broker-dealers will spend 1,000 hours per year complying with Rule 15c3–1f. The total burden is estimated to be approximately 5,000 hours.

The records required to be kept pursuant to Appendix F and results of periodic reviews conducted pursuant to Rule 15c3–4 generally must be preserved under Rule 17a–4 of the Exchange Act (17 CFR 240.17a–4) for a period of not less than three years, the first two years in an easily accessible place. The Commission will not generally publish or make available to any person notices or reports received pursuant to the Rule. The statutory basis for the Commission's refusal to disclose such information to the public is the exemption contained in Section (b)(4) of the Freedom of Information Act, 5 U.S.C. 552, which essentially provides that the requirement of public dissemination does not apply to commercial or financial information which is privileged or confidential.

An agency may not conduct or sponsor, and a person is not required to respond to, a collection of information unless it displays a currently valid control number.

Comments should be directed to: (i) Desk Officer for the Securities and Exchange Commission Office of Information and Regulatory Affairs, Office of Management and Budget, Room 10102, New Executive Office Building, Washington, DC 20503 or by sending an e-mail to: *Shagufta_Ahmed@omb.eop.gov*; and (ii) Charles Boucher, Director/Chief Information Officer, Securities and Exchange Commission, c/o Shirley Martinson, 6432 General Green Way, Alexandria, Virginia 22312 or send an e-mail to *PRA_Mailbox@sec.gov.* Comments must be submitted to OMB within 30 days of this notice.

[1] 15 U.S.C. 78o–7.

[2] *See* Rule 17g–4. Release No. 34–55231 (Feb. 2, 2007), 72 FR 6378 (Feb. 9, 2007); and Release No. 34–55857 (June 5, 2007), 72 FR 33564 (June 18, 2007).

[3] 50 hours × 30 NRSROs = 1,500 hours.

Dated: March 17, 2010.

Florence E. Harmon,

Deputy Secretary.

[FR Doc. 2010–6505 Filed 3–23–10; 8:45 am]

BILLING CODE 8011–01–P

SECURITIES AND EXCHANGE COMMISSION

Submission for OMB Review; Comment Request

Upon Written Request, Copies Available From: U.S. Securities and Exchange Commission, Office of Investor Education and Advocacy, Washington, DC 20549–0213.

Extension:

Rule 17a–12, SEC File No. 270–442, OMB Control No. 3235–0498.

Notice is hereby given that pursuant to the Paperwork Reduction Act of 1995 (44 U.S.C. 3501 *et seq.*), the Securities and Exchange Commission ("Commission") has submitted to the Office of Management and Budget a request for approval of extension of the previously approved collection provided for in Rule 17a–12 (17 CFR 240.17a–12) under the Securities Exchange Act of 1934 (15 U.S.C. 78a *et seq.*) ("Exchange Act").

Rule17a–12 under the Exchange Act requires OTC derivatives dealers to file quarterly Financial and Operational Combined Uniform Single Reports ("FOCUS" reports) on Part IIB of Form X–17A–5,[1] the basic document for reporting the financial and operational condition of OTC derivatives dealers. Rule 17a–12 also requires that OTC derivatives dealers file audited financial statements annually. The reports required under Rule 17a–12 provide the Commission with information used to monitor the operations of OTC derivatives dealers and to enforce their compliance with the Commission's rules. These reports also enable the Commission to review the business activities of OTC derivatives dealers and to anticipate, where possible, how these dealers may be affected by significant economic events.

The staff estimates that the average amount of time necessary to prepare and file the information required by Rule 17a–12 is 180 hours per OTC derivatives dealer annually—an average of twenty hours preparing each of four quarterly reports and an additional 100 hours for the annual audit. Four entities are presently registered as OTC derivatives dealers and the staff expects that one additional OTC derivatives dealer, with an application pending, will become registered within the next three years. Thus the total burden is estimated to be 900 hours annually ((180 × 4) + (180 × 1)).

Comments should be directed to: (i) Desk Officer for the Securities and Exchange Commission Office of Information and Regulatory Affairs, Office of Management and Budget, Room 10102, New Executive Office Building, Washington, DC 20503 or by sending an email to: *Shagufta_Ahmed@omb.eop.gov;* and (ii) Charles Boucher, Director/Chief Information Officer, Securities and Exchange Commission, c/o Shirley Martinson, 6432 General Green Way, Alexandria, Virginia 22312 or send an e-mail to *PRA_Mailbox@sec.gov.* Comments must be submitted to OMB within 30 days of this notice.

Dated: March 17, 2010.

Florence E. Harmon,

Deputy Secretary.

[FR Doc. 2010–6506 Filed 3–23–10; 8:45 am]

BILLING CODE 8011–01–P

[1] Form X–17A–5 (17 CFR 249.617).

SECURITIES AND EXCHANGE COMMISSION

[Release No. 34–61727; File No. SR–NYSEArca–2010–13]

Self-Regulatory Organizations; NYSE Arca, Inc.; Notice of Filing and Immediate Effectiveness of Proposed Rule Change To Accommodate Cabinet Trades That Take Place Below $1 Per Option Contract Until July 1, 2010

March 17, 2010.

Pursuant to Section 19(b)(1) of the Securities Exchange Act of 1934 (the "Act") [1] and Rule 19b–4 thereunder,[2] notice is hereby given that, on March 3, 2010, NYSE Arca, Inc. ("NYSE Arca" or the "Exchange") filed with the Securities and Exchange Commission (the "Commission") the proposed rule change as described in Items I and II below, which Items have been prepared by the Exchange. The Commission is publishing this notice to solicit comments on the proposed rule change from interested persons.

I. Self-Regulatory Organization's Statement of the Terms of Substance of the Proposed Rule Change

The Exchange proposes to adopt Commentary .01 to Rule 6.80, Accommodation Transactions (Cabinet Trades), to permit transactions to take place at a price that is below $1 per option contract. The text of the proposed rule change is attached as Exhibit 5 to the 19b–4 form. A copy of this filing is available on the Exchange's Web site at *http://www.nyse.com*, at the Exchange's principal office and at the Commission's Public Reference Room.

II. Self-Regulatory Organization's Statement of the Purpose of, and Statutory Basis for, the Proposed Rule Change

In its filing with the Commission, the self-regulatory organization included statements concerning the purpose of, and basis for, the proposed rule change and discussed any comments it received on the proposed rule change. The text of those statements may be examined at the places specified in Item IV below. The Exchange has prepared summaries, set forth in sections A, B, and C below, of the most significant parts of such statements.

A. Self-Regulatory Organization's Statement of the Purpose of, and the Statutory Basis for, the Proposed Rule Change

1. Purpose

The purpose of this filing is to allow accommodation transactions ("Cabinet Trades") to take place at a price that is below $1 per option contract. The Exchange proposes to adopt a rule based on CBOE Rule 6.54, Interpretations and Policies .03.[3]

Cabinet trading is generally conducted in accordance with the Exchange Rules, except as provided in Exchange Rule 6.80 Accommodation Transactions (Cabinet Trades), which sets forth specific procedures for engaging in cabinet trades. Rule 6.80 currently provides for cabinet transactions to occur via open outcry at a cabinet price of a $1 per option contract in any options series open for trading in the Exchange, except that the Rule is not applicable to trading in option classes participating in the Penny Pilot Program. Under the procedures, bids and offers (whether opening or closing a position) at a price of $1 per option contract may be represented in the trading crowd by a Floor Broker or by a Market-Maker or provided in response to a request by a Trading Official, a Floor Broker or a Market-Maker, but must yield priority to all resting orders in the Cabinet (those orders held by the Trading Official, and which resting cabinet orders may be closing only). So long as both the buyer and the seller yield to orders resting in

[1] 15 U.S.C.78s(b)(1).

[2] 17 CFR 240.19b–4.

[3] *See* Securities Exchange Act Release No. 59188 (December 30, 2008), 74 FR 480 (January 6, 2009)(SR–CBOE–2008–133).

the cabinet book, opening cabinet bids can trade with opening cabinet offers at $1 per option contract.

The purpose of this rule change is to temporarily amend the procedures through July 1, 2010 to allow transactions to take place in open outcry at a price of at least $0 but less than $1 per option contract. These lower priced transactions would be traded pursuant to the same procedures applicable to $1 cabinet trades, except that (i) bids and offers for opening transactions would only be permitted to accommodate closing transactions in order to limit use of the procedure to liquidations of existing positions, and (ii) the procedures would also be made available for trading in option classes participating in the Penny Pilot Program.[4] The Exchange believes that allowing a price of at least $0 but less than $1 will better accommodate the closing of options positions in series that are worthless or not actively traded, particularly due to recent market conditions which have resulted in a significant number of series being out-of-the-money. For example, a market participant might have a long position in a call series with a strike price of $100 and the underlying stock might now be trading at $30. In such an instance, there might not otherwise be a market for that person to close-out its position even at the $1 cabinet price (*e.g.,* the series might be quoted no bid).

As with other accommodation liquidations under Rule 6.80, transactions that occur for less than $1 will not be disseminated to the public on the consolidated tape. In addition, as with other accommodation liquidations under Rule 6.80, the transactions will be exempt from the Consolidated Options Audit Trail ("COATS") requirements of Exchange Rule 6.67 Order Format and System Entry Requirements. However, the Exchange will maintain quotation, order and transaction information for the transactions in the same format as the COATS data is maintained. In this regard, all transactions for less than $1 must be reported to the Exchange following the close of each business day.

2. Statutory Basis

The Exchange believes the proposed rule change is consistent with Section 6(b)[5] of the Securities Exchange Act of 1934 (the "Act"), in general, and furthers the objectives of Section 6(b)(5)[6] in particular in that it is designed to promote just and equitable principles of trade, to prevent fraudulent and manipulative acts, to remove impediments to and to perfect the mechanism for a free and open market and a national market system and, in general, to protect investors and the public interest. The Exchange believes that allowing for liquidations at a price less than $1 per option contract will better facilitate the closing of options positions that are worthless or not actively trading, especially in Penny Pilot issues where Cabinet Trades are not otherwise permitted.

B. Self-Regulatory Organization's Statement on Burden on Competition

The Exchange does not believe that the proposed rule change will impose any burden on competition that is not necessary or appropriate in furtherance of the purposes of the Act.

C. Self-Regulatory Organization's Statement on Comments on the Proposed Rule Change Received From Members, Participants, or Others

No written comments were solicited or received with respect to the proposed rule change.

III. Date of Effectiveness of the Proposed Rule Change and Timing for Commission Action

The foregoing rule change has become effective pursuant to Section 19(b)(3)(A) of the Act[7] and Rule 19b–4(f)(6) thereunder because the proposal does not: (i) Significantly affect the protection of investors or the public interest; (ii) impose any significant burden on competition; and (iii) by its terms, become operative for 30 days from the date on which it was filed, or such shorter time as the Commission may designate if consistent with the protection of investors and the public interest.[8]

The Exchange has requested that the Commission waive the 30-day operative delay period. In making such request, the Exchange stated that immediate operability will level the current competitive landscape by permitting the Exchange to implement changes similar to those implemented by the CBOE. The Commission hereby grants the request. The Commission notes that the proposal is nearly identical to the rules of another self-regulatory organization,[9] and believes that waiver of the 30-day period will enable the Exchange to provide a means for investors to close out positions that are worthless or not actively trading without delay. Based on the above, the Commission believes it is consistent with the protection of investors and the public interest to waive the 30-day operative delay and designates the proposal as operative upon filing.[10]

At any time within 60 days of the filing of the proposed rule change, the Commission may summarily abrogate such proposed rule change if it appears to the Commission that such action is necessary or appropriate in the public interest, for the protection of investors, or otherwise in furtherance of the purposes of the Act.[11]

IV. Solicitation of Comments

Interested persons are invited to submit written data, views, and arguments concerning the foregoing, including whether the proposed rule change is consistent with the Act. Comments may be submitted by any of the following methods:

Electronic Comments

- Use the Commission's Internet comment form (*http://www.sec.gov/rules/sro.shtml*); or
- Send an e-mail to *rule-comments@sec.gov*. Please include File Number SR–NYSEArca–2010–13 on the subject line.

Paper Comments

- Send paper comments in triplicate to Elizabeth M. Murphy, Secretary, Securities and Exchange Commission, 100 F Street, NE., Washington, DC 20549–1090.

All submissions should refer to File Number SR–NYSEArca–2010–013. This file number should be included on the subject line if e-mail is used. To help the Commission process and review your comments more efficiently, please use

[4] Currently the $1 cabinet trading procedures are limited to options classes traded in $0.05 or $0.10 standard increment. The $1 cabinet trading procedures are not available in Penny Pilot Program classes because in those classes an option series can trade in a standard increment as low as $0.01 per share (or $1.00 per option contract with a 100 share multiplier). Because the instant rule change would allow trading below $0.01 per share (or $1.00 per option contract with a 100 share multiplier), the procedures would be made available for all classes, including those classes participating in the Penny Pilot Program.

[5] 15 U.S.C. 78f(b).

[6] 15 U.S.C. 78f(b)(5).

[7] 15 U.S.C. 78s(b)(3)(A).

[8] 17 CFR 240.19b–4(f)(6). In addition, Rule 19b–4(f)(6)(iii) requires the Exchange to give the Commission written notice of the Exchange's intent to file the proposed rule change, along with a brief description and text of the proposed rule change, at least five business days prior to the date of filing of the proposed rule change, or such shorter time as designated by the Commission. The Exchange has satisfied the pre-filing requirement.

[9] *See* CBOE Rule 6.54, Interpretations and Policies .03.

[10] For purposes only of waiving the operative delay for this proposal, the Commission has considered the proposed rule's impact on efficiency, competition, and capital formation. *See* 15 U.S.C. 78c(f).

[11] 15 U.S.C. 78s(b)(3)(C).

only one method. The Commission will post all comments on the Commission's Internet Web site (*http://www.sec.gov/rules/sro.shtml*). Copies of the submission, all subsequent amendments, all written statements with respect to the proposed rule change that are filed with the Commission, and all written communications relating to the proposed rule change between the Commission and any person, other than those that may be withheld from the public in accordance with the provisions of 5 U.S.C. 552, will be available for Web site viewing and printing in the Commission's Public Reference Room on official business days between the hours of 10 a.m. and 3 p.m. Copies of such filing also will be available for inspection and copying at the principal offices of the Exchange. All comments received will be posted without change; the Commission does not edit personal identifying information from submissions. You should submit only information that you wish to make available publicly.

All submissions should refer to File Number SR–NYSEArca–2010–13, and should be submitted on or before April 14, 2010.

For the Commission, by the Division of Trading and Markets, pursuant to delegated authority.[12]

Florence E. Harmon,

Deputy Secretary.

[FR Doc. 2010–6509 Filed 3–23–10; 8:45 am]

BILLING CODE 8011–01–P

[12] 17 CFR 200.30–3(a)(12).

SECURITIES AND EXCHANGE COMMISSION

[Release No. 34–61733; File No. SR–CHX–2010–06]

Self-Regulatory Organizations; Chicago Stock Exchange, Inc.; Notice of Filing and Immediate Effectiveness of Proposed Rule Change To Amend CHX Article 8, Rule 14 To, Among Other Things, Prohibit Broker Discretionary Voting on the Elections of Directors

March 18, 2010.

Pursuant to Section 19(b)(1) of the Securities Exchange Act of 1934 ("Act"),[1] and Rule 19b–4 [2] thereunder, notice is hereby given that on March 9, 2010, the Chicago Stock Exchange, Inc. ("CHX" or the "Exchange") filed with the Securities and Exchange Commission ("SEC" or "Commission") the proposed rule change as described in Items I and II below, which Items have been prepared by the CHX. The Exchange filed the proposal as a "non-controversial" proposed rule change pursuant to Section 19(b)(3)(A)(iii) of the Act [3] and Rule 19b–4(f)(6) thereunder.[4] The Commission is publishing this notice to solicit comments on the proposed rule change from interested persons.

[1] 15 U.S.C. 78s(b)(1).

[2] 17 CFR 240.19b–4.

[3] 15 U.S.C. 78s(b)(3)(A)(iii).

[4] 17 CFR 240.19b–4(f)(6).

I. Self-Regulatory Organization's Statement of the Terms of Substance of the Proposed Rule Change

CHX proposes to amend Article 8, Rule 14 regarding proxy voting by Participants which hold stock on behalf of the beneficial owner. Specifically, the Exchange would like to enumerate in its rules certain matters that affect substantially the rights and privileges of stock and therefore should not be voted on by Participants without instructions from the beneficial owner. The text of this proposed rule change is available on the Exchange's Web site at (*http://www.chx.com*) and in the Commission's Public Reference Room.

II. Self-Regulatory Organization's Statement of the Purpose of, and Statutory Basis for, the Proposed Rule Change

In its filing with the Commission, the CHX included statements concerning the purpose of and basis for the proposed rule changes and discussed any comments it received regarding the proposal. The text of these statements may be examined at the places specified in Item IV below. The CHX has prepared summaries, set forth in sections A, B and C below, of the most significant aspects of such statements.

A. Self-Regulatory Organization's Statement of the Purpose of, and Statutory Basis for, the Proposed Rule Changes

1. Purpose

The CHX is proposing to amend Article 8, Rule 14 regarding proxy voting by Participants which hold stock on behalf of the beneficial owner. Specifically, the Exchange would like to enumerate in its rules certain matters that affect substantially the rights and privileges of stock and therefore should not be voted on by Participants without instructions from the beneficial owner.

Under the current CHX and SEC proxy rules, Participants must deliver proxy materials to beneficial owners and request voting instructions in return. If voting instructions have not been received by the tenth day preceding the meeting date, Rule 14 provides that Participants may vote on certain matters deemed "routine" by the CHX. One of the most important results of Participant votes of uninstructed shares is their use in establishing a quorum at shareholder meetings.

At present, matters considered routine by the CHX are those in which the person signing the proxy has no knowledge of any contest as to the action to be taken at the meeting and provided such action does not include authorization for a merger, consolidation or any other matter which may affect substantially the legal rights or privileges of such stock. In addition to this guidance, CHX rules specifically state that a Participant may not give a proxy to vote when the matter to be voted upon authorizes the implementation of any equity compensation plan, or any material revision to the terms of any existing equity compensation plan.

With this rule filing, CHX would like to amend its rules to conform to the NYSE's rules [5] to eliminate any disparities involving voting depending on where the shares are held.[6] CHX would also like to enumerate in its rules certain matters that affect substantially the rights and privileges of stock and therefore should not be voted on by Participants without instructions from the beneficial owner. These include: Any matter that is not submitted to stockholders by means of a proxy statement comparable to that specified in Schedule 14–A of Securities and Exchange Commission; any matter that is the subject of a counter-solicitation or is part of a proposal made by a stockholder which is being opposed by management (*i.e.,* a contest); any matter that relates to a merger or consolidation (except when the company's proposal is to merge with its own wholly owned subsidiary, provided its shareholders dissenting thereto do not have rights of appraisal); and, matters that involve a right of appraisal. Additionally, matters that authorize mortgaging of property, authorize or create indebtedness or increase the authorized amount of indebtedness, authorize or create a preferred stock or increase the authorized amount of an existing preferred stock or alter the terms or conditions of existing stock or indebtedness will also be prohibited

[5] *See* NYSE Rule 452.

[6] The Commission has indicated that, while other self-regulatory organizations currently allow discretionary voting, it expects these markets to make changes to conform to the NYSE's rules to eliminate any disparities involving voting depending on where shares are held. *See* Securities Exchange Act Release No. 34–60215 (July 1, 2009).

from being voted by a Participant without instruction.

Other matters that affect substantially the rights and privileges of stock and therefore should not be voted on by Participants without instructions from the beneficial owner are those involving a waiver or modification of preemptive rights (except when the company's proposal is to waive such rights with respect to shares being offered pursuant to stock option or purchase plans involving the additional issuance of not more than 5% of the company's outstanding common shares), those changing existing quorum requirements with respect to stockholder meetings, those altering voting provisions or the proportionate voting power of a stock, or those altering the number of its votes per share (except where cumulative voting provisions govern the number of votes per share for election of directors and the company's proposal involves a change in the number of its directors by not more than 10% or not more than one).

Additionally, Participants will be prohibited from voting, absent instructions, on any matter that authorizes a new profit-sharing or special remuneration plan, or a new retirement plan, the annual cost of which will amount to more than 10% of average annual income before taxes for the preceding five years or the amendment of an existing plan which would bring its cost above 10% of such average annual income before taxes; however, exceptions may be made to these general prohibitions in the cases of retirement plans based on agreement or negotiations with labor unions (or which have been or are to be approved by such unions) and any related retirement plan for benefit of non-union employees having terms substantially equivalent to the terms of such union-negotiated plan, which is submitted for action of stockholders concurrently with such union negotiated plan.

Further matters that may not be voted by Participants without the beneficial owner's instructions include: Those that change the purposes or powers of a company to an extent which would permit it to change to a materially different line of business and it is the company's stated intention to make such a change; those that authorize the acquisition of property, assets, or a company, where the consideration to be given has a fair value approximating 20% or more of the market value of the previously outstanding shares; those that authorize the sale or other disposition of assets or earning power approximating 20% or more of those existing prior to the transaction; those that authorize a transaction not in the ordinary course of business in which an officer, director or substantial security holder has a direct or indirect interest; and, those that reduce earned surplus by 51% or more, or reduces earned surplus to an amount less than the aggregate of three years' common stock dividends computed at the current dividend rate.

The Exchange also believes that Participants should not vote uninstructed stock for the election of directors, provided, however, that this prohibition shall not apply in the case of a company registered under the Investment Company Act of 1940.

Finally, the Exchange proposes to prohibit voting, without instruction from the beneficial owner, on material amendments to an investment advisory contract with an investment company. The Exchange will also add commentary on this item indicating that a material amendment to an investment advisory contract would include any proposal to obtain shareholder approval of an investment company's investment advisory contract with a new investment adviser, which approval is required by the Investment Company Act of 1940, as amended (the "1940 Act"), and the rules thereunder. Such approval will be deemed to be a "matter which may affect substantially the rights or privileges of such stock" for purposes of this rule so that a Participant may not give a proxy to vote shares registered in its name absent instruction from the beneficial holder of the shares. As a result, for example, a Participant may not give a proxy to vote shares registered in its name, absent instruction from the beneficial holder of the shares, on any proposal to obtain shareholder approval required by the 1940 Act of an investment advisory contract between an investment company and a new investment adviser due to an assignment of the investment company's investment advisory contract, including an assignment caused by a change in control of the investment adviser that is party to the assigned contract.

The Exchange notes that the foregoing matters are substantially similar to the list of matters that have been adopted by the New York Stock Exchange and that have been previously approved by the Commission.[7]

2. Statutory Basis

The Exchange believes that the proposed rule change is consistent with Section 6(b) of the Act in general,[8] and furthers the objectives of Section 6(b)(5) in particular,[9] in that it is designed to promote just and equitable principles of trade, to foster cooperation and coordination with persons engaged in facilitating transaction in securities, to remove impediments and perfect the mechanisms of a free and open market, and, in general, to protect investors and the public interest by allowing CHX to amend Article 8, Rule 14 regarding proxy voting by Participants which hold stock on behalf of the beneficial owner. The Exchange believes that certain matters that affect substantially the rights and privileges of stock should not be voted on by Participants without instructions from the beneficial owner.

B. Self-Regulatory Organization's Statement of Burden on Competition

The Exchange does not believe that the proposed rule change will impose any burden on competition that is not necessary or appropriate in furtherance of the purposes of the Act.

C. Self-Regulatory Organization's Statement on Comments Regarding the Proposed Rule Changes Received From Members, Participants or Others

No written comments were either solicited or received.

III. Date of Effectiveness of the Proposed Rule Change and Timing for Commission Action

The Exchange has filed the proposed rule change pursuant to Section 19(b)(3)(A)(iii) of the Act[10] and Rule 19b–4(f)(6) thereunder.[11] Because the proposed rule change does not: (i) Significantly affect the protection of investors or the public interest; (ii) impose any significant burden on competition; and (iii) by its terms, become operative prior to 30 days from the date on which it was filed, or such shorter time as the Commission may designate, if consistent with the protection of investors and the public interest, the proposed rule change has become effective pursuant to Section 19(b)(3)(A) of the Act[12] and Rule 19b–4(f)(6)(iii) thereunder.[13]

[7] *See* NYSE Rule 452 * * * Supplementary Material .11.

[8] 15 U.S.C. 78f(b).

[9] 15 U.S.C. 78f(b)(5).

[10] 15 U.S.C. 78s(b)(3)(A)(iii).

[11] 17 CFR 240.19b–4(f)(6).

[12] 15 U.S.C. 78s(b)(3)(A).

[13] 17 CFR 240.19b–4(f)(6)(iii). In addition, Rule 19b–4(f)(6)(iii) requires the Exchange to give the Commission written notice of the Exchange's intent to file the proposed rule change, along with a brief description and text of the proposed rule change, at least five business days prior to the date of filing of the proposed rule change, or such shorter time as designated by the Commission. The Exchange has satisfied the pre-filing requirement.

A proposed rule change filed under Rule 19b–4(f)(6)[14] normally does not become operative prior to 30 days after the date of the filing. However, pursuant to Rule 19b4(f)(6)(iii),[15] the Commission may designate a shorter time if such action is consistent with the protection of investors and the public interest. The Exchange has requested the Commission to waive the 30-day operative delay so that the proposal may become operative immediately upon filing. In making this request, the Exchange stated that the proposal is based upon the rules of NYSE.

The Commission believes that the waiver of the 30-day operative delay period is consistent with the protection of investors and the public interest.[16] The proposal would permit the Exchange to comply with the Commission's stated goal that self-regulatory organizations who currently allow members to use discretionary voting for director elections conform their rules to the NYSE's rules to eliminate any voting disparities depending on where the shares are held. Further, the proposal would update and conform the Exchange's proxy voting rule to reflect the recent changes to NYSE's rule on broker discretionary voting on the election of directors, as well as material amendments to investment advisory contracts. Moreover, the Commission notes that these recent changes to NYSE's rules were subject to full notice and comment, and considered and approved by the Commission.[17] Based on the above, the Commission finds that waiving the 30-day operative delay period is consistent with the protection of investors and the public interest and the proposal is therefore deemed effective upon filing.

At any time within 60 days of the filing of the proposed rule change, the Commission may summarily abrogate such rule change if it appears to the Commission that such action is necessary or appropriate in the public interest, for the protection of investors, or otherwise in furtherance of the purposes of the Act.

IV. Solicitation of Comments

Interested persons are invited to submit written data, views, and arguments concerning the foregoing, including whether the proposed rule change is consistent with the Act. Comments may be submitted by any of the following methods:

Electronic Comments

- Use the Commission's Internet comment form (*http://www.sec.gov/rules/sro.shtml*); or
- Send an e-mail to *rule-comments@sec.gov.* Please include File Number SR–CHX–2010–06 on the subject line.

Paper Comments

- Send paper comments in triplicate to Elizabeth M. Murphy, Secretary, Securities and Exchange Commission, 100 F Street, NE., Washington, DC 20549–1090.

All submissions should refer to File Number SR–CHX–2010–06. This file number should be included on the subject line if e-mail is used. To help the Commission process and review your comments more efficiently, please use only one method. The Commission will post all comments on the Commission's Internet Web site (*http://www.sec.gov/rules/sro.shtml*). Copies of the submission, all subsequent amendments, all written statements with respect to the proposed rule change that are filed with the Commission, and all written communications relating to the proposed rule change between the Commission and any person, other than those that may be withheld from the public in accordance with the provisions of 5 U.S.C. 552, will be available for Web site viewing and printing in the Commission's Public Reference Room, 100 F Street, NE., Washington, DC 20549, on official business days between the hours of 10 a.m. and 3 p.m. Copies of such filing also will be available for inspection and copying at the principal office of the Exchange. All comments received will be posted without change; the Commission does not edit personal identifying information from submissions. You should submit only information that you wish to make available publicly. All submissions should refer to File Number SR–CHX–2010–06 and should be submitted on or before April 14, 2010.

For the Commission, by the Division of Trading and Markets, pursuant to delegated authority.[18]

Florence E. Harmon,

Deputy Secretary.

[FR Doc. 2010–6512 Filed 3–23–10; 8:45 am]

BILLING CODE 8011–01–P

[14] 17 CFR 240.19b–4(f)(6).

[15] 17 CFR 240.19b–4(f)(6)(iii).

[16] For purposes only of waiving the operative delay for this proposal, the Commission has considered the proposed rule's impact on efficiency, competition, and capital formation. *See* 15 U.S.C. 78c(f).

[17] *See supra* note 6.

[18] 17 CFR 200.30–3(a)(12).

SECURITIES AND EXCHANGE COMMISSION

[Release No. 34–61724; File No. SR–NYSE–2010–25]

Self-Regulatory Organizations; Notice of Filing and Immediate Effectiveness of Proposed Rule Change by New York Stock Exchange LLC Proposing To Extend the Operation of Its New Market Model Pilot, Currently Scheduled To Expire on March 30, 2010, Until the Earlier of Securities and Exchange Commission Approval To Make Such Pilot Permanent or September 30, 2010

March 17, 2010.

Pursuant to Section 19(b)(1)[1] of the Securities Exchange Act of 1934 (the "Act")[2] and Rule 19b–4 thereunder,[3] notice is hereby given that, on March 15, 2010, New York Stock Exchange LLC ("NYSE" or the "Exchange") filed with the Securities and Exchange Commission (the "Commission") the proposed rule change as described in Items I and II below, which Items have been prepared by the self-regulatory organization. The Commission is publishing this notice to solicit comments on the proposed rule change from interested persons.

I. Self-Regulatory Organization's Statement of the Terms of Substance of the Proposed Rule Change

The New York Stock Exchange LLC ("Exchange" or "NYSE") proposes to extend the operation of its New Market Model Pilot, currently scheduled to expire on March 30, 2010, until the earlier of Securities and Exchange Commission approval to make such pilot permanent or September 30, 2010. The text of the proposed rule change is available at the Exchange, the Commission's Public Reference Room, and *http://www.nyse.com.*

II. Self-Regulatory Organization's Statement of the Purpose of, and Statutory Basis for, the Proposed Rule Change

In its filing with the Commission, the self-regulatory organization included statements concerning the purpose of, and basis for, the proposed rule change and discussed any comments it received on the proposed rule change. The text of those statements may be examined at the places specified in Item IV below. The Exchange has prepared summaries, set forth in sections A, B, and C below, of the most significant parts of such statements.

[1] 15 U.S.C.78s(b)(1).

[2] 15 U.S.C. 78a.

[3] 17 CFR 240.19b–4.

A. Self-Regulatory Organization's Statement of the Purpose of, and Statutory Basis for, the Proposed Rule Change

1. Purpose

The Exchange proposes to extend the operation of its New Market Model Pilot [4] ("NMM Pilot") approved by the Securities and Exchange Commission ("SEC" or "Commission") currently scheduled to expire on March 30, 2010 until the earlier of Securities and Exchange Commission approval to make such pilot permanent or September 30, 2010.

The Exchange notes that parallel changes are proposed to be made to the rules of the NYSE Amex LLC.[5]

Background [6]

In October 2008, the NYSE implemented significant changes to its market rules, execution technology and the rights and obligations of its market participants all of which were designed to improve execution quality on the Exchange. These changes are all elements of the Exchange's enhanced market model. Certain of the enhanced market model changes were implemented through a pilot program.

As part of the NMM Pilot, NYSE eliminated the function of specialists on the Exchange creating a new category of market participant, the Designated Market Maker or DMM.[7] The DMMs, like specialists, have affirmative obligations to make an orderly market, including continuous quoting requirements and obligations to re-enter the market when reaching across to execute against trading interest. Unlike specialists, DMMs have a minimum quoting requirement [8] in their assigned securities and no longer have a negative obligation. DMMs are also no longer agents for public customer orders.[9]

In addition, the Exchange implemented a system change that allowed DMMs to create a schedule of additional non-displayed liquidity at various price points where the DMM is willing to interact with interest and provide price improvement to orders in the Exchange's system. This schedule is known as the DMM Capital Commitment Schedule ("CCS").[10] CCS provides the Display Book® [11] with the amount of shares that the DMM is willing to trade at price points outside, at and inside the Exchange BBO. CCS interest is separate and distinct from other DMM interest in that it serves as the interest of last resort.

The NMM Pilot further modified the logic for allocating executed shares among market participants having trading interest at a price point upon execution of incoming orders. The modified logic rewards displayed orders that establish the Exchange's best bid or Exchange's best offer. During the operation of the NMM Pilot orders or portions thereof that establish priority [12] retain that priority until the portion of the order that established priority is exhausted. Where no one order has established priority, shares are distributed among all market participants on parity.

The NMM Pilot was originally scheduled to end operation on October 1, 2009, or such earlier time as the Commission may determine to make the rules permanent. The Exchange filed to extend the operation of the Pilot on two occasions in order to prepare a rule filing seeking permission to make the above described changes permanent.[13] The Exchange is currently still preparing such formal submission but does not expect that filing to be completed and approved by the Commission before March 30, 2010.

Proposal to Extend the Operation of the NMM Pilot

The NYSE established the NMM Pilot to provide incentives for quoting, to enhance competition among the existing group of liquidity providers and to have its market maker be a new competitive market participant. The Exchange believes that the NMM Pilot allows the Exchange to provide its market participants with a trading venue that utilizes an enhanced market structure to encourage the addition of liquidity, facilitate the trading of larger orders more efficiently and operates to reward aggressive liquidity providers. As such, the Exchange believes that the rules governing the NMM Pilot should be made permanent. Through this filing the Exchange seeks to extend the current operation of the NMM Pilot until September 30, 2010, in order to allow the Exchange time to formally submit a filing to the Commission to convert the pilot rules to permanent rules.

2. Statutory Basis

The Exchange believes the proposed rule change is consistent with and furthers the objectives of Section 6(b)(5) of the Act,[14] in that it is designed to prevent fraudulent and manipulative practices, to promote just and equitable principles of trade, to remove impediments to, and perfect the mechanisms of, a free and open market and a national market system, and, in general, to protect investors and the public interest.

B. Self-Regulatory Organization's Statement on Burden on Competition

The Exchange does not believe that the proposed rule change will impose any burden on competition that is not necessary or appropriate in furtherance of the purposes of the Act.

C. Self-Regulatory Organization's Statement on Comments on the Proposed Rule Change Received From Members, Participants, or Others

No written comments were solicited or received with respect to the proposed rule change.

III. Date of Effectiveness of the Proposed Rule Change and Timing for Commission Action

The Exchange has filed the proposed rule change pursuant to Section 19(b)(3)(A)(iii) of the Act [15] and Rule 19b–4(f)(6) thereunder.[16] Because the proposed rule change does not: (i) Significantly affect the protection of investors or the public interest; (ii) impose any significant burden on competition; or (iii) become operative prior to 30 days from the date on which it was filed, or such shorter time as the Commission may designate, if consistent with the protection of investors and the public interest, the proposed rule change has become effective pursuant to Section 19(b)(3)(A)

[4] *See* Securities Exchange Act Release No. 58845 (October 24, 2008), 73 FR 64379 (October 29, 2008) (SR–NYSE–2008–46); *See also* Securities Exchange Act Release No. 60756 (October 1, 2009), 74 FR 51628 (October 7, 2009) (SR–NYSE–2009–100) (extending the operation of the NMM Pilot until the earlier of Securities and Exchange Commission approval to make such pilot permanent or November 30, 2009).

[5] *See* SR–NYSEAmex–2010–28.

[6] The information contained herein is a summary of the NMM Pilot, for a fuller description of the pilots *see supra* note 1 [sic].

[7] *See* NYSE Rule 103.

[8] *See* NYSE Rules 104.

[9] *See* NYSE Rule 60; *See also* NYSE Rules 104 and 1000.

[10] *See* NYSE Rule 1000.

[11] The Display Book® system is an order management and execution facility. The Display Book system receives and displays orders to the DMMs, contains the order information, and provides a mechanism to execute and report transactions and publish the results to the Consolidated Tape. The Display Book system is connected to a number of other Exchange systems for the purposes of comparison, surveillance, and reporting information to customers and other market data and national market systems.

[12] *See* NYSE Rule 72(a)(ii).

[13] *See* Securities Exchange Act Release Nos. 60756 (October 1, 2009), 74 FR 51628 (October 7, 2009) (SR–NYSE–2009–100) (extending Pilot to November 30, 2009), 61031 (November 19, 2009, 74 FR 62368 (November 27, 2009) (SR–NYSE–2009–113) (extending Pilot to March 30, 2010).

[14] 15 U.S.C. 78f(b)(5).

[15] 15 U.S.C. 78s(b)(3)(A)(iii).

[16] 17 CFR 240.19b–4(f)(6).

of the Act and Rule 19b–4(f)(6)(iii) thereunder.[17]

A proposed rule change filed under Rule 19b–4(f)(6)[18] normally does not become operative prior to 30 days after the date of the filing. However, pursuant to Rule 19b-4(f)(6)(iii),[19] the Commission may designate a shorter time if such action is consistent with the protection of investors and the public interest. The Exchange has asked the Commission to waive the 30-day operative delay so that the proposal may become operative immediately upon filing.

The Commission believes that waiving the 30-day operative delay is consistent with the protection of investors and the public interest. The Commission notes that because the pilot program will expire on March 30, 2010, waiver of the operative delay is necessary so that no interruption of the pilot program will occur. In addition, the Commission notes that the Exchange has requested extension of the pilot to allow the Exchange time to formally request permanent approval. Therefore, the Commission designates the proposal operative upon filing.[20]

At any time within 60 days of the filing of the proposed rule change, the Commission may summarily abrogate such rule change if it appears to the Commission that such action is necessary or appropriate in the public interest, for the protection of investors, or otherwise in furtherance of the purposes of the Act.

IV. Solicitation of Comments

Interested persons are invited to submit written data, views, and arguments concerning the foregoing, including whether the proposed rule change is consistent with the Act. Comments may be submitted by any of the following methods:

Electronic Comments

- Use the Commission's Internet comment form (*http://www.sec.gov/rules/sro.shtml*); or
- Send an e-mail to *rule-comments@sec.gov*. Please include File Number SR–NYSE–2010–25 on the subject line.

Paper Comments

- Send paper comments in triplicate to Elizabeth M. Murphy, Secretary, Securities and Exchange Commission, 100 F Street, NE., Washington, DC 20549–1090.

All submissions should refer to File Number SR–NYSE–2010–25. This file number should be included on the subject line if e-mail is used. To help the Commission process and review your comments more efficiently, please use only one method. The Commission will post all comments on the Commission's Internet Web site (*http://www.sec.gov/rules/sro.shtml*). Copies of the submission, all subsequent amendments, all written statements with respect to the proposed rule change that are filed with the Commission, and all written communications relating to the proposed rule change between the Commission and any person, other than those that may be withheld from the public in accordance with the provisions of 5 U.S.C. 552, will be available for Web site viewing and printing in the Commission's Public Reference Section on official business days between the hours of 10 a.m. and 3 p.m. Copies of such filing also will be available for inspection and copying at the principal office of the Exchange. All comments received will be posted without change; the Commission does not edit personal identifying information from submissions. You should submit only information that you wish to make available publicly. All submissions should refer to File Number SR–NYSE–2010–25 and should be submitted on or before April 14, 2010.

For the Commission, by the Division of Trading and Markets, pursuant to delegated authority.[21]

Florence E. Harmon,

Deputy Secretary.

[FR Doc. 2010–6377 Filed 3–23–10; 8:45 am]

BILLING CODE 8011–01–P

[17] 17 CFR 240.19b–4(f)(6). In addition, Rule 19b–4(f)(6)(iii) requires the self-regulatory organization to submit to the Commission written notice of its intent to file the proposed rule change, along with a brief description and text of the proposed rule change, at least five business days prior to the date of filing of the proposed rule change, or such shorter time as designated by the Commission. The Exchange has satisfied this requirement.

[18] 17 CFR 240.19b–4(f)(6).

[19] 17 CFR 240.19b–4(f)(6)(iii).

[20] For purposes only of waiving the operative delay for this proposal, the Commission has considered the proposed rule's impact on efficiency, competition, and capital formation. *See* 15 U.S.C. 78c(f).

[21] 17 CFR 200.30–3(a)(12).

SECURITIES AND EXCHANGE COMMISSION

[Release No. 34–61725; File No. SR–NYSEAmex–2010–28]

Self-Regulatory Organizations; Notice of Filing and Immediate Effectiveness of Proposed Rule Change by NYSE Amex LLC Proposing To Extend the Operation of Its New Market Model Pilot Currently Scheduled To Expire on March 30, 2010, Until the Earlier of Securities and Exchange Commission Approval To Make Such Pilot Permanent or September 30, 2010

March 17, 2010.

Pursuant to Section 19(b)(1)[1] of the Securities Exchange Act of 1934 (the "Act")[2] and Rule 19b–4 thereunder,[3] notice is hereby given that on March 15, 2010, NYSE Amex LLC (the "Exchange" or "NYSE Amex") filed with the Securities and Exchange Commission (the "Commission") the proposed rule change as described in Items I and II below, which Items have been prepared by the self-regulatory organization. The Commission is publishing this notice to solicit comments on the proposed rule change from interested persons.

I. Self-Regulatory Organization's Statement of the Terms of Substance of the Proposed Rule Change

NYSE Amex LLC (the "Exchange" or "NYSE Amex") proposes to extend the operation of its New Market Model Pilot currently scheduled to expire on March 30, 2010, until the earlier of Securities and Exchange Commission approval to make such pilot permanent or September 30, 2010. The text of the proposed rule change is available at the Exchange, the Commission's Public Reference Room, and *http://www.nyse.com*.

II. Self-Regulatory Organization's Statement of the Purpose of, and Statutory Basis for, the Proposed Rule Change

In its filing with the Commission, the self-regulatory organization included statements concerning the purpose of, and basis for, the proposed rule change and discussed any comments it received on the proposed rule change. The text of those statements may be examined at the places specified in Item IV below. The Exchange has prepared summaries, set forth in sections A, B, and C below, of the most significant parts of such statements.

[1] 15 U.S.C.78s(b)(1).

[2] 15 U.S.C. 78a.

[3] 17 CFR 240.19b–4.

A. Self-Regulatory Organization's Statement of the Purpose of, and Statutory Basis for, the Proposed Rule Change

1. Purpose

The Exchange proposes to extend the operation of its New Market Model Pilot ("NMM Pilot") that was adopted pursuant to its merger with the New York Stock Exchange LLC.[4] The NMM Pilot was approved by the Securities and Exchange Commission ("SEC" or "Commission") to operate until October 1, 2009. The Exchange filed to extend the operation of the Pilot to November 30, 2009[5] and then to March 30, 2010.[6] The Exchange now seeks to extend the operation of the NMM Pilot from March 30, 2010, until the earlier of Securities and Exchange Commission approval to make such pilot permanent or September 30, 2010.

The Exchange notes that parallel changes are proposed to be made to the rules of New York Stock Exchange LLC.[7]

Background[8]

In December 2008, NYSE Amex implemented significant changes to its market rules, execution technology and the rights and obligations of its market participants all of which were designed to improve execution quality on the Exchange. These changes are all elements of the Exchange's enhanced market model that it implemented through the NMM Pilot.

As part of the NMM Pilot, NYSE Amex eliminated the function of specialists on the Exchange creating a new category of market participant, the Designated Market Maker or DMM.[9] The DMMs, like specialists, have affirmative obligations to make an orderly market, including continuous quoting requirements and obligations to re-enter the market when reaching across to execute against trading interest. Unlike specialists, DMMs have a minimum quoting requirement[10] in their assigned securities and no longer have a negative obligation. DMMs are also no longer agents for public customer orders.[11]

In addition, the Exchange implemented a system change that allowed DMMs to create a schedule of additional non-displayed liquidity at various price points where the DMM is willing to interact with interest and provide price improvement to orders in the Exchange's system. This schedule is known as the DMM Capital Commitment Schedule ("CCS").[12] CCS provides the Display Book®[13] with the amount of shares that the DMM is willing to trade at price points outside, at and inside the Exchange BBO. CCS interest is separate and distinct from other DMM interest in that it serves as the interest of last resort.

The NMM Pilot further modified the logic for allocating executed shares among market participants having trading interest at a price point upon execution of incoming orders. The modified logic rewards displayed orders that establish the Exchange's best bid or Exchange's best offer. During the operation of the NMM Pilot orders or portions thereof that establish priority[14] retain that priority until the portion of the order that established priority is exhausted. Where no one order has established priority, shares are distributed among all market participants on parity.

The NMM Pilot was originally scheduled to end operation on October 1, 2009, or such earlier time as the Commission may determine to make the rules permanent. The Exchange filed to extend the operation of the Pilot on two occasions[15] in order to prepare a rule filing seeking permission to make the above described changes permanent. The Exchange is currently still preparing such formal submission but does not expect that filing to be completed and approved by the Commission before March 30, 2010.

Proposal To Extend the Operation of the NMM Pilot

NYSE Amex established the NMM Pilot to provide incentives for quoting, to enhance competition among the existing group of liquidity providers and add a new competitive market participant. The Exchange believes that the NMM Pilot allows the Exchange to provide its market participants with a trading venue that utilizes an enhanced market structure to encourage the addition of liquidity, facilitate the trading of larger orders more efficiently and operates to reward aggressive liquidity providers. As such, the Exchange believes that rules governing the NMM Pilot should be made permanent. Through this filing the Exchange seeks to extend the current operation of the NMM Pilot until September 30, 2010, in order to allow the Exchange time to formally submit a filing to the Commission to convert the pilot rules to permanent rules.

2. Statutory Basis

The basis under the Securities Exchange Act of 1934 (the "Act") for this proposed rule change is the requirement under Section 6(b)(5) that an exchange have rules that are designed to promote just and equitable principles of trade, to remove impediments to and perfect the mechanism of a free and open market and a national market system and, in general, to protect investors and the public interest. The Exchange believes that the instant filing is consistent with these principles because the NMM Pilot provides its market participants with a trading venue that utilizes an enhanced market structure to encourage the addition of liquidity, facilitate the trading of larger orders more efficiently and operates to reward aggressive liquidity providers. Moreover, the instant filing requesting an extension of the NMM Pilot will permit adequate time for: (i) The Exchange to prepare and submit a filing to make the rules governing the NMM Pilot permanent rules; (ii) public notice and comment;

[4] NYSE Euronext acquired The Amex Membership Corporation ("AMC") pursuant to an Agreement and Plan of Merger, dated January 17, 2008 (the "Merger"). In connection with the Merger, the Exchange's predecessor, the American Stock Exchange LLC ("Amex"), a subsidiary of AMC, became a subsidiary of NYSE Euronext called NYSE Alternext US LLC. Securities Exchange Act Release No. 58673 (September 29, 2008), 73 FR 57707 (October 3, 2008) (SR–NYSE–2008–60 and SR–Amex–2008–62) (approving the Merger). Subsequently NYSE Alternext US LLC was renamed NYSE Amex LLC and continues to operate as a national securities exchange registered under Section 6 of the Securities Exchange Act of 1934, as amended (the "Act"). NYSE Alternext US LLC was subsequently renamed NYSE Amex LLC. *See* Securities Exchange Act Release No. 59575 (March 13, 2009), 74 FR 11803 (March 19, 2009) (SR–NYSEALTR–2009–24).

[5] *See* Securities Exchange Act Release No. 60758 (October 1, 2009), 74 FR (October 7, 2009) (SR–NYSEAmex–2009–65).

[6] *See* Securities Exchange Act Release No. 61030 (November 19, 2009), 74 FR 62365 (November 27, 2009) (SR–NYSEAmex–2009–83).

[7] *See* SR–NYSE–2010–25.

[8] The information contained herein is a summary of the NMM Pilot. For a fuller description of the pilot *see* Securities Exchange Act Release No. 58845 (October 24, 2008), 73 FR 64379 (October 29, 2008) (SR–NYSE–2008–46).

[9] *See* NYSE Amex Equities Rule 103.

[10] *See* NYSE Amex Equities Rule, 104.

[11] *See* NYSE Amex Equities Rule 60; *See also* 104 and 1000.

[12] *See* NYSE Amex Equities Rule 1000.

[13] The Display Book® system is an order management and execution facility. The Display Book system receives and displays orders to the DMMs, contains the order information, and provides a mechanism to execute and report transactions and publish the results to the Consolidated Tape. The Display Book system is connected to a number of other Exchange systems for the purposes of comparison, surveillance, and reporting information to customers and other market data and national market systems.

[14] *See* NYSE Amex Equities Rule 72(a)(ii).

[15] *See* Securities Exchange Act Release Nos. 60758 (October 1, 2009), 74 FR [sic] (October 7, 2009) (SR–NYSEAmex–2009–65) (extending Pilot to November 30, 2009); 61030 (November 19, 2009), 74 FR 62365 (November 27, 2009) (SR–NYSEAmex–2009–83) (extending Pilot to March 30, 2010).

and (iii) completion of the 19b–4 approval process.

B. Self-Regulatory Organization's Statement on Burden on Competition

The Exchange does not believe that the proposed rule change will impose any burden on competition that is not necessary or appropriate in furtherance of the purposes of the Act.

C. Self-Regulatory Organization's Statement on Comments on the Proposed Rule Change Received From Members, Participants, or Others

No written comments were solicited or received with respect to the proposed rule change.

III. Date of Effectiveness of the Proposed Rule Change and Timing for Commission Action

The Exchange has filed the proposed rule change pursuant to Section 19(b)(3)(A)(iii) of the Act [16] and Rule 19b–4(f)(6) thereunder.[17] Because the proposed rule change does not: (i) Significantly affect the protection of investors or the public interest; (ii) impose any significant burden on competition; or (iii) become operative prior to 30 days from the date on which it was filed, or such shorter time as the Commission may designate, if consistent with the protection of investors and the public interest, the proposed rule change has become effective pursuant to Section 19(b)(3)(A) of the Act and Rule 19b–4(f)(6)(iii) thereunder.[18]

A proposed rule change filed under Rule 19b–4(f)(6) [19] normally does not become operative prior to 30 days after the date of the filing. However, pursuant to Rule 19b–4(f)(6)(iii),[20] the Commission may designate a shorter time if such action is consistent with the protection of investors and the public interest. The Exchange has asked the Commission to waive the 30-day operative delay so that the proposal may become operative immediately upon filing.

The Commission believes that waiving the 30-day operative delay is consistent with the protection of investors and the public interest. The Commission notes that because the pilot program will expire on March 30, 2010, waiver of the operative delay is necessary so that no interruption of the pilot program will occur. In addition, the Commission notes that the Exchange has requested extension of the pilot to allow the Exchange time to formally request permanent approval. Therefore, the Commission designates the proposal operative upon filing.[21]

At any time within 60 days of the filing of the proposed rule change, the Commission may summarily abrogate such rule change if it appears to the Commission that such action is necessary or appropriate in the public interest, for the protection of investors, or otherwise in furtherance of the purposes of the Act.

IV. Solicitation of Comments

Interested persons are invited to submit written data, views, and arguments concerning the foregoing, including whether the proposed rule change is consistent with the Act. Comments may be submitted by any of the following methods:

Electronic Comments

- Use the Commission's Internet comment form (*http://www.sec.gov/rules/sro.shtml*); or
- Send an e-mail to *rule-comments@sec.gov.* Please include File Number SR–NYSEAmex–2010–28 on the subject line.

Paper Comments

- Send paper comments in triplicate to Elizabeth M. Murphy, Secretary, Securities and Exchange Commission, 100 F Street, NE., Washington, DC 20549–1090.

All submissions should refer to File Number SR–NYSEAmex–2010–28. This file number should be included on the subject line if e-mail is used. To help the Commission process and review your comments more efficiently, please use only one method. The Commission will post all comments on the Commission's Internet Web site (*http://www.sec.gov/rules/sro.shtml*). Copies of the submission, all subsequent amendments, all written statements with respect to the proposed rule change that are filed with the Commission, and all written communications relating to the proposed rule change between the Commission and any person, other than those that may be withheld from the public in accordance with the provisions of 5 U.S.C. 552, will be available for Web site viewing and printing in the Commission's Public Reference Section on official business days between the hours of 10 a.m. and 3 p.m. Copies of such filing also will be available for inspection and copying at the principal office of the Exchange. All comments received will be posted without change; the Commission does not edit personal identifying information from submissions. You should submit only information that you wish to make available publicly. All submissions should refer to File Number SR–NYSEAmex–2010–28 and should be submitted on or before April 14, 2010.

For the Commission, by the Division of Trading and Markets, pursuant to delegated authority.[22]

Florence E. Harmon,

Deputy Secretary.

[FR Doc. 2010–6376 Filed 3–23–10; 8:45 am]

BILLING CODE 8011–01–P

[16] 15 U.S.C. 78s(b)(3)(A)(iii).

[17] 17 CFR 240.19b–4(f)(6).

[18] 17 CFR 240.19b–4(f)(6). In addition, Rule 19b–4(f)(6)(iii) requires the self-regulatory organization to submit to the Commission written notice of its intent to file the proposed rule change, along with a brief description and text of the proposed rule change, at least five business days prior to the date of filing of the proposed rule change, or such shorter time as designated by the Commission. The Exchange has satisfied this requirement.

[19] 17 CFR 240.19b–4(f)(6).

[20] 17 CFR 240.19b–4(f)(6)(iii).

[21] For purposes only of waiving the operative delay for this proposal, the Commission has considered the proposed rule's impact on efficiency, competition, and capital formation. *See* 15 U.S.C. 78c(f).

[22] 17 CFR 200.30–3(a)(12).

SECURITIES AND EXCHANGE COMMISSION

[Release No. 34–61737; File No. SR–ISE–2010–22]

Self-Regulatory Organizations; International Securities Exchange, LLC; Notice of Filing and Immediate Effectiveness of Proposed Rule Change To Permit Concurrent Listing of $3.50 and $4 Strikes for Classes in the $0.50 Strike and $1 Strike Programs

March 18, 2010.

Pursuant to section 19(b)(1) of the Securities Exchange Act of 1934 (the "Act"),[1] and Rule 19b–4 thereunder,[2] notice is hereby given that on March 10, 2010, the International Securities Exchange, LLC (the "Exchange" or the "ISE") filed with the Securities and Exchange Commission ("Commission") the proposed rule change as described in Items I, II, and III below, which items have been prepared by the Exchange. The Exchange has filed the proposal as a "non-controversial" proposed rule change pursuant to Section 19(b)(3)(A)(iii) of the Act [3] and Rule 19b–4(f)(6) thereunder.[4] The Commission is publishing this notice to solicit comments on the proposed rule change from interested persons.

[1] 15 U.S.C. 78s(b)(1).

[2] 17 CFR 240.19b–4.

[3] 15 U.S.C. 78s(b)(3)(A).

[4] 17 CFR 240.19b–4(f)(6).

I. Self-Regulatory Organization's Statement of the Terms of Substance of the Proposed Rule Change

The Exchange proposes to permit the concurrent listing of $3.50 and $4 strikes for classes that participate in both the $0.50 Strike and $1 Strike Programs. The text of the proposed rule change is available on the Exchange's Web site *http://www.ise.com,* at the principal office of the Exchange, and at the Commission's Public Reference Room.

II. Self-Regulatory Organization's Statement of the Purpose of, and Statutory Basis for, the Proposed Rule Change

In its filing with the Commission, the self-regulatory organization included statements concerning the purpose of and basis for the proposed rule change and discussed any comments it received on the proposed rule change. The text of those statements may be examined at the places specified in Item IV below. The Exchange has prepared summaries, set forth in sections A, B, and C below, of the most significant parts of such statements.

A. Self-Regulatory Organization's Statement of the Purpose of, and Statutory Basis for, the Proposed Rule Change

1. Purpose

The purpose of this proposed rule change is to permit the concurrent listing of $3.50 and $4 strikes for classes that participate in both the $0.50 Strike and $1 Strike Programs.

The Exchange recently implemented a rule change that permits strike price intervals of $0.50 for options on stocks trading at or below $3.00 ("$0.50 Strike Program").[5] As part of the filing to establish the $0.50 Strike Program, the Exchange contemplated that a class may be selected to participate in both the $0.50 Strike Program and the $1 Strike Program. Under the $1 Strike Program, new series with $1 intervals are not permitted to be listed within $0.50 of an existing $2.50 strike price in the same series, except that strike prices of $2 and $3 are permitted to be listed within $0.50 of a $2.50 strike price for classes also selected to participate in the $0.50 Strike Program.[6] Under ISE's existing rule, for classes selected to participate in both the $0.50 Strike Program and the $1 Strike Program, the Exchange may either: (a) List a $3.50 strike but not list a $4 strike; or (b) list a $4 strike but not list a $3.50 strike. For example, if a $3.50 strike for an options class in both the $0.50 and $1 Strike Programs was listed, the next highest permissible strike price would be $5.00. Alternatively, if a $4 strike was listed, the next lowest permissible strike price would be $3.00. The intent of the $.50 Strike Program was to expand the ability of investors to hedge risks associated with stocks trading at or under $3 and to provide finer intervals of $0.50, beginning at $1 up to $3.50. As a result, the Exchange believes that the current filing is consistent with the purpose of the $0.50 Strike Program and will permit the Exchange to fill in any existing gaps resulting from having to choose whether to list a $3.50 or $4 strike for options classes in both the $0.50 and $1 Strike Programs.

Therefore, the Exchange is submitting the current filing to permit the listing of concurrent $3.50 and $4 strikes for classes that are selected to participate in both the $0.50 Strike Program and the $1 Strike Program. To effect this change, the Exchange is proposing to amend Supplementary Material .01(b) to ISE Rule 504 by adding $4 to the strike prices of $2 and $3 currently permitted if a class participates in both the $0.50 Strike Program and the $1 Strike Program.

The Exchange is also proposing to amend the current rule text to delete references to "$2.50 strike prices" (and the example utilizing $2.50 strike prices) and to replace those references with broader language, *e.g.,* "existing strike prices."

2. Statutory Basis

The basis under the Securities Exchange Act of 1934 ("Exchange Act") for this proposed rule change is the requirement under section 6(b)(5) of the Exchange Act[7] that an exchange have rules that are designed to promote just and equitable principles of trade, and to remove impediments to and perfect the mechanism for a free and open market and a national market system, and in general, to protect investors and the public interest. In particular, the proposed rule change will allow the Exchange to list more granular strikes on options overlying lower priced securities, which the Exchange believes will provide investors with greater flexibility by allowing them to establish positions that ate better tailored to meet their investment objectives.

B. Self-Regulatory Organization's Statement on Burden on Competition

The proposed rule change does not impose any burden on competition that is not necessary or appropriate in furtherance of the purposes of the Act.

C. Self-Regulatory Organization's Statement on Comments on the Proposed Rule Change Received From Members, Participants, or Others

The Exchange has not solicited, and does not intend to solicit, comments on this proposed rule change. The Exchange has not received any unsolicited written comments from members or other interested parties.

III. Date of Effectiveness of the Proposed Rule Change and Timing for Commission Action

Because the foregoing proposed rule change does not significantly affect the protection of investors or the public interest, does not impose any significant burden on competition, and, by its terms, does not become operative for 30 days from the date on which it was filed, or such shorter time as the Commission may designate, it has become effective pursuant to section 19(b)(3)(A)[8] of the Act and Rule 19b–4(f)(6)[9] thereunder. The Exchange provided the Commission with written notice of its intent to file the proposed rule change, along with a brief description and text of the proposed rule change, at least five business days prior to the date of filing the proposed rule change.

The Exchange has requested that the Commission waive the 30-day operative delay to permit the Exchange to compete with other exchanges whose rules permit concurrent listing of $3.50 and $4 strikes for classes similarly participating in both a $0.50 strike program and a $1 strike program. The Commission finds that waiver of the operative delay is consistent with the protection of investors and the public interest because such waiver will encourage fair competition among the exchanges. Therefore, the Commission designates the proposal operative upon filing.[10]

At any time within 60 days of the filing of the proposed rule change, the Commission may summarily abrogate such rule change if it appears to the Commission that such action is necessary or appropriate in the public

[5] *See* Exchange Act Release No. 60696 (September 18, 2009), 74 FR 49053 (September 24, 2009) (SR–ISE–2009–65).

[6] *See* Supplementary Material .01(b) to ISE Rule 504.

[7] 15 U.S.C. 78f(b)(5).

[8] 15 U.S.C. 78s(b)(3)(A).

[9] 17 C.F.R. 240.19b–4(f)(6).

[10] For purposes only of waiving the 30-day operative delay, the Commission has considered the proposed rule's impact on efficiency, competition, and capital formation. *See* 15 U.S.C. 78c(f).

interest, for the protection of investors, or otherwise in furtherance of the purposes of the Act.

IV. Solicitation of Comments

Interested persons are invited to submit written data, views, and arguments concerning the foregoing, including whether the proposed rule change is consistent with the Act. Comments may be submitted by any of the following methods:

Electronic Comments

- Use the Commission's Internet comment form (*http://www.sec.gov/rules/sro.shtml);* or
- Send an e-mail to *rule-comments@sec.gov.* Please include File Number SR–ISE–2010–22 on the subject line.

Paper Comments

- Send paper comments in triplicate to Elizabeth M. Murphy, Secretary, Securities and Exchange Commission, 100 F Street, NE., Washington, DC 20549–1090.

All submissions should refer to File Number SR–ISE–2010–22. This file number should be included on the subject line if e-mail is used. To help the Commission process and review your comments more efficiently, please use only one method. The Commission will post all comments on the Commission's Internet Web site (*http://www.sec.gov/rules/sro.shtml*). Copies of the submission, all subsequent amendments, all written statements with respect to the proposed rule change that are filed with the Commission, and all written communications relating to the proposed rule change between the Commission and any person, other than those that may be withheld from the public in accordance with the provisions of 5 U.S.C. 552, will be available for Web site viewing and printing in the Commission's Public Reference Room, 100 F Street, NE., Washington, DC 20549, on official business days between the hours of 10 a.m. and 3 p.m. Copies of the filing also will be available for inspection and copying at the principal office of the Exchange. All comments received will be posted without change; the Commission does not edit personal identifying information from submissions. You should submit only information that you wish to make available publicly. All submissions should refer to File Number SR–ISE–2010–22 and should be submitted on or before April 14, 2010.

For the Commission, by the Division of Trading and Markets, pursuant to delegated authority.[11]

Florence E. Harmon,

Deputy Secretary.

[FR Doc. 2010–6517 Filed 3–23–10; 8:45 am]

BILLING CODE 8011–01–P

[11] 17 CFR 200.30–3(a)(12).

SECURITIES AND EXCHANGE COMMISSION

[Release No. 34–61735; File No. SR–NASDAQ–2010–007]

Self-Regulatory Organizations; The NASDAQ Stock Market LLC; Order Approving Proposed Rule Change, as Modified by Amendment No. 1, Relating to the Elimination of a Market Maker Requirement for Each Option Series

March 18, 2010.

I. Introduction

On January 14, 2010, The NASDAQ Stock Market LLC ("Nasdaq" or "Exchange") filed with the Securities and Exchange Commission ("Commission"), pursuant to Section 19(b)(1) of the Securities Exchange Act of 1934 ("Act") [1] and Rule 19b–4 thereunder,[2] a proposed rule change to eliminate the requirement that at least one Options Market Maker [3] must be registered for trading a particular series before it may be opened for trading on the Nasdaq Options Market ("NOM"). On January 26, 2009, the Exchange filed Amendment No. 1 to the proposal. The proposed rule change, as modified by Amendment No. 1, was published for comment in the **Federal Register** on February 4, 2009.[4] The Commission received one comment letter on the proposal.[5] This order approves the proposed rule change, as modified by Amendment No. 1.

II. Description of the Proposal

Currently, Chapter IV, Section 5 of the NOM rulebook provides, in relevant part, that after a particular class of options has been approved for listing on NOM by NASDAQ Regulation, NASDAQ will open trading in series of options in that class only if there is at least one Market Maker registered for trading that particular series. The Exchange is now proposing to eliminate this requirement to have a Market Maker in every series. The Exchange argues that removing this requirement will expand the number of series available to investors for trading and for hedging risks associated with securities underlying those options. Further, the Exchange asserts that market makers currently may choose to register as Market Makers in a particular series solely to permit an option to trade on NOM. The Exchange believes that the proposed rule change will permit Market Makers to focus their expertise on the products that are more consistent with their business objectives or more likely to attract customer order flow.

The Exchange also notes that the Options Order Protection and Locked/Crossed Market Plan requires plan participants (such as Nasdaq) to establish, maintain and enforce written policies and procedures that are reasonably designed to prevent trade-throughs in that participant's market in Eligible Options Classes.[6] Further, the Exchange notes that NOM has put in place rules to implement this provision of the Plan, and that its systems are designed to systematically avoid trading through protected quotations on other options exchanges.[7] Thus, the Exchange believes that the lack of a two-sided or tight market on NOM would not cause customer orders to be executed at prices inferior to the best prices available across all exchanges.

In addition, the Exchange is proposing to delete paragraph (b) of Section 5, Chapter IV, which states that a class of options will be put into a non-regulatory halt if at least one series for that class is not open for trading. The Exchange explains that this provision was put in place so that the Exchange could approve underlying securities for the listing of options but delay the listing if the Market Makers on the Exchange were not yet ready to register in any series of options for that class. With the elimination of the other

[1] 15 U.S.C. 78s(b)(1).

[2] 17 CFR 240.19b–4.

[3] An "Options Market Maker" is a Participant registered with NASDAQ as a Market Maker. *See* NOM Rules, Chapter I, Section 1(a)(26) and Chapter VII, Section 2. An "Options Participant" or "Participant" is a firm or organization that is registered with the Exchange pursuant to Chapter II of the NOM Rules for purposes of participating in options trading on NOM as a "NASDAQ Options Order Entry Firm" or "NASDAQ Options Market Maker." *See* NOM Rules, Chapter I, Section 1(a)(40).

[4] *See* Securities Exchange Act Release No. 61443 (January 29, 2010), 74 FR 46267 ("Notice").

[5] *See* letter from Janet M. Kissane, Senior Vice President—Legal and Corporate Secretary, NYSE Euronext, to Elizabeth M. Murphy, Secretary, Commission, dated February 26, 2010 ("NYSE Euronext Comment Letter").

[6] *See* Securities Exchange Act Release No. 60405 (July 30, 2009), 74 FR 39362 (August 6, 2009) (File No. 4–546) (approval order for the Protection and Locked/Crossed Plan).

[7] *See* NOM Rules, Chapter XII, Section 2; and Securities Exchange Act Release No. 60525 (August 18, 2009), 74 FR 43188 (August 26, 2009) (approval order for NOM's proposed rule change to implement the Protection and Locked/Crossed Plan).

paragraph in Section 5 requiring a Market Maker in each option series, the Exchange believes this provision is no longer necessary.

III. Discussion and Commission Findings

After careful review, the Commission finds that the proposed rule change, as amended, is consistent with the requirements of the Act and the rules and regulations thereunder applicable to a national securities exchange and, in particular, with Section 6(b)(5) of the Act,[8] which requires, among other things, that the rules of a national securities exchange be designed to prevent fraudulent and manipulative acts and practices, to promote just and equitable principles of trade, to remove impediments to, and perfect the mechanism of, a free and open market and a national market system and, in general, to protect investors and the public interest.[9]

The Commission has stated previously that it does not believe that the Act requires an exchange to have market makers.[10] In making this finding in connection with its approval of NOM, the Commission stated that the Act does not mandate a particular market model for national securities exchanges, and many different types of market models can satisfy the requirements of the Act. The Commission further noted that although Market Makers could be an important source of liquidity on NOM, they likely would not be the only source.[11] Similarly, in adopting Regulation ATS, the Commission found that assuring liquidity through the posting of continuous two-sided quotations was not a necessary component of an exchange.[12]

In its comment letter, NYSE Euronext notes that NOM Market Makers are considered specialists under the Act and are required to engage in a course of dealings for their own account to assist in the maintenance of a fair and orderly market. As such, NYSE Euronext argues that the Exchange's proposal would result in no one being responsible for the maintenance of a fair and orderly market on NOM where there is no Market Maker registered in a series.[13] NYSE Euronext also suggests that Nasdaq seek an exemption under Section 11(c) of the Act "to be relieved of the obligation to appoint a specialist."[14]

As stated above, the Commission believes that the Act does not require an exchange to have specialists or market markets and that Market Makers are not the only source of liquidity on an exchange. Moreover, Section 11 of the Act does not require exchanges to have specialists or market makers. Section 11(b) of the Act permits, but does not require, a national securities exchange to allow a member to be registered as a specialist.[15] Accordingly, the Commission disagrees with NYSE Euronext's assertion that Nasdaq is required to seek an exemption to allow it to eliminate its Market Maker listing requirement.

NYSE Euronext also argues that when Nasdaq originally adopted its rules governing NOM, the Securities Industry and Financial Markets Association ("SIFMA") submitted a comment letter that raised the issue of having a market maker appointed in each series ("SIFMA Comment Letter").[16] In particular, NYSE Euronext notes that the SIFMA Comment Letter stated that Nasdaq should clarify the treatment of option series without a market maker, including what actions would be taken should a Market Maker withdraw from making a market in a particular series and whether NOM would continue to match orders in such series. NYSE Euronext maintains that Nasdaq should address why SIFMA's concerns are no longer valid.

The Commission notes that these comments in the SIFMA Comment Letter did not raise questions as to whether having a series without a Market Maker would be consistent with the Act, but rather sought clarification as to what would occur should a Market Maker stop quoting or withdraw from making a market in a particular option series.[17] As NYSE Euronext acknowledged in its comment letter, Nasdaq addressed the SIFMA Comment Letter by amending its rules to clarify the treatment of option series in such cases.[18]

NYSE Euronext also contends that Nasdaq should be required to assist brokers in fulfilling their duty of best execution because many permit holders on NYSE Arca Inc. ("Arca") and NYSE Amex LLC ("Amex") routinely route orders to multiple exchanges as part of their due diligence.[19] Specifically, NYSE Euronext states that Nasdaq should be required to cancel back to brokers any resting orders in a series where a registered market maker is not quoting or to send an alert that a registered market maker quotation is no longer present.[20]

The duty of best execution requires a broker-dealer to seek the most favorable terms reasonably available under the circumstances for a customer's transaction.[21] The Commission has not viewed the duty of best execution as requiring automated routing on an order-by-order basis to the market with the best quoted price at that time. Rather, the duty of best execution requires broker-dealers to periodically assess the quality of competing markets to assure that order flow is directed to markets providing the most beneficial terms for their customer orders.[22] Broker-dealers must examine their procedures for seeking to obtain best execution in light of market and technology changes and modify those practices if necessary to enable their customers to obtain the best reasonably available terms.[23] In doing so, broker-dealers must take into account price improvement opportunities, and whether different markets may be more suitable for different types of orders or

[8] 15 U.S.C. 78f(b)(5).

[9] In approving this proposed rule change, the Commission has considered the proposed rule's impact on efficiency, competition, and capital formation. *See* 15 U.S.C. 78c(f).

[10] *See* Securities Exchange Act Release Nos. 57478 (March 12, 2008), 73 FR 14521, 14527 (March 18, 2008) (File No. SR–NASDAQ–2007–004) ("NOM Approval Order") and Securities Exchange Act Release No. 40760 (December 8, 1998), 63 FR 70844 (December 22, 1998) ("Regulation ATS Release").

[11] *See* NOM Approval Order, *supra* note 10, at 14527.

[12] Regulation ATS Release, *supra* note 10, at 70898–70900. Specifically, the Commission stated, "[A]lthough traditional exchanges still provide liquidity through two-sided quotations and, hence, raise an expectation of execution at the quoted price, this is no longer an essential characteristic of a securities market * * * Market makers and specialists may be important liquidity providers on a particular exchange, but liquidity now comes from many sources across multiple markets. For example, the public exposure of investor limit orders means that it is now easier to access liquidity in trading venues that do not have market makers or specialists." *Id.* at 70899.

[13] *See* NYSE Euronext Comment Letter, *supra* note 5, at 1.

[14] *See* NYSE Euronext Comment Letter, *supra* note 5, at 1.

[15] 15 U.S.C. 78k(b).

[16] *See* NYSE Euronext Comment Letter, *supra* note 5, at 1–2.

[17] *See* NOM Approval Order, *supra* note 10, at 14526.

[18] *See* NYSE Euronext Comment Letter, *supra* note 5, at 1–2.

[19] *See* NYSE Euronext Comment Letter, *supra* note 5, at 2.

[20] *See id.*

[21] *See, e.g.,* Securities Exchange Act Release No. 37619A (September 6, 1996), 61 FR 48290 (September 12, 1996), at 48322 ("Order Handling Rules Release").

[22] *Id.* at 48322–48333 ("[I]n conducting the requisite evaluation of its internal order handling procedures, a broker-dealer must regularly and rigorously examine execution quality likely to be obtained from different markets or market makers trading a security."). *See also Newton* v. *Merrill, Lynch, Pierce, Fenner & Smith, Inc.,* 135 F.3d 266, at 271, 274 (3d Cir.), *cert. denied,* 525 U.S. 811 (1998); Payment for Order Flow, Securities Exchange Act Release No. 34902 (October 27, 1994), 59 FR 55006 (November 2, 1994), at 55009.

[23] Order Handling Rules Release, *supra* note 21, at 48323.

particular securities.[24] The Commission believes that the potential lack of a Market Maker quoting in particular series will be a factor to be considered in a broker-dealer's best execution routing determination, similar to other factors a broker-dealer must consider in connection with its best execution obligation.

The NYSE Euronext Comment Letter also questions how Nasdaq's proposal fosters transparency, price competition, and the development of the national market system.[25] The Commission does not believe that the proposal will have a negative affect on price transparency, as the prices and sizes of orders on NOM will continue to be disseminated on the consolidated tape even though Market Makers may not be posting two-sided quotations. Further, the Commission believes that the proposal could foster intermarket price competition by providing an additional market and source of liquidity for options series that would otherwise have been prohibited from trading on NOM due to the lack of a Market Maker registered in that series. Finally, the Commission does not believe that the proposal will have a negative effect on the development of a national market system. As noted above, notwithstanding the elimination of the requirement to have a registered Market Maker trading in a particular series, NOM is designed to ensure, and the Options Order Protection and Locked/Crossed Market Plan requires that procedures are in place to ensure, that orders executed on NOM will not trade-through better prices on other options exchanges.

Finally, the NYSE Euronext Comment Letter expresses doubt about the necessity of the proposed rule change and suggests that if there is no Market Maker to trade a series, NOM should simply not list such series.[26] The Commission notes that a proposed rule change is not required to be "necessary" in order to be found consistent with the Act. Further, as Nasdaq noted, one of the primary purposes of the proposal is to expand the number of series available to investors for trading and hedging purposes on NOM, and NYSE Euronext's recommendation would not advance this objective.

For the reasons noted above, the Commission believes that the proposed rule change is consistent with the Act.

[24] *Id.*

[25] *See* NYSE Euronext Comment Letter, *supra* note 5, at 2.

[26] *See* NYSE Euronext Comment Letter, *supra* note 5, at 2.

IV. Conclusion

It is therefore ordered, pursuant to Section 19(b)(2) of the Act,[27] that the proposed rule change (SR–NASDAQ–2010–007), as modified by Amendment No. 1, be, and hereby is, approved.

For the Commission, by the Division of Trading and Markets, pursuant to delegated authority.[28]

Florence E. Harmon,

Deputy Secretary.

[FR Doc. 2010–6516 Filed 3–23–10; 8:45 am]

BILLING CODE 8011–01–P

[27] 15 U.S.C. 78s(b)(2).

[28] 17 CFR 200.30–3(a)(12).

SECURITIES AND EXCHANGE COMMISSION

[Release No. 34–61736; File No. SR–NASDAQ–2010–038]

Self-Regulatory Organizations; Notice of Filing and Immediate Effectiveness of a Proposed Rule Change by The NASDAQ Stock Market LLC To Permit the Concurrent Listing of $3.50 and $4 Strikes for Classes Participating in the $0.50 Strike Program and the $1 Strike Program

March 18, 2010.

Pursuant to Section 19(b)(1) of the Securities Exchange Act of 1934 ("Act")[1], and Rule 19b–4[2] thereunder, notice is hereby given that on March 16, 2010, The NASDAQ Stock Market LLC ("NASDAQ") filed with the Securities and Exchange Commission ("SEC" or "Commission") the proposed rule change as described in Items I, II, and III, below, which Items have been prepared by NASDAQ. The Commission is publishing this notice to solicit comments on the proposed rule change from interested persons.

I. Self-Regulatory Organization's Statement of the Terms of Substance of the Proposed Rule Change

NASDAQ is filing with the Securities and Exchange Commission ("SEC" or "Commission") a proposal for the NASDAQ Options Market ("NOM" or "Exchange") to amend Chapter IV, Section 6 (Series of Options Contracts Open for Trading) to permit the concurrent listing of $3.50 and $4 strikes for classes that participate in both the $0.50 Strike Price Program ("$0.50 Strike Program")[3] and the $1 Strike Price Program ("$1 Strike Program").[4]

The Exchange requests that the Commission waive the 30-day operative delay period contained in Exchange Act Rule 19b–4(f)(6)(iii).[5]

The text of the proposed rule change is available from NASDAQ's Web site at *http://nasdaq.cchwallstreet.com/Filings/,* at NASDAQ's principal office, and at the Commission's Public Reference Room.

II. Self-Regulatory Organization's Statement of the Purpose of, and Statutory Basis for, the Proposed Rule Change

In its filing with the Commission, the self-regulatory organization included statements concerning the purpose of and basis for the proposed rule change and discussed any comments it received on the proposed rule change. The text of those statements may be examined at the places specified in Item IV below. The Exchange has prepared summaries, set forth in sections A, B, and C below, of the most significant parts of such statements.

A. Self-Regulatory Organization's Statement of the Purpose of, and Statutory Basis for, the Proposed Rule Change

1. Purpose

The purpose of this proposal is to amend Chapter IV, Section 6 to permit the concurrent listing of $3.50 and $4 strikes for classes that participate in both the $0.50 Strike Program and the $1 Strike Program.

The Exchange recently implemented a rule change that permits strike price intervals of $0.50 for options on stocks trading at or below $3.00 pursuant to the $0.50 Strike Program.[6] As part of the filing to establish the $0.50 Strike Program, the Exchange contemplated that a class may be selected to

[1] 15 U.S.C. 78s(b)(1).

[2] 17 CFR 240.19b–4.

[3] The $0.50 Strike Program was initiated in an immediately effective filing on November 6, 2009. *See* Securities Exchange Act Release No. 60952 (November 6, 2009), 74 FR 59277 (November 17, 2009) (SR–NASDAQ–2009–099) (notice of filing and immediate effectiveness).

[4] The $1 Strike Program was initially approved as a pilot on March 12, 2008. *See* Securities Exchange Act Release No. 57478 (March 12, 2008), 73 FR 14521(March 18, 2008) (SR–NASDAQ–2007–004 and SR–NASDAQ–2007–080) (order approving). The program was subsequently made permanent and expanded. *See* Securities Exchange Act Release Nos. 58093 (July 3, 2008), 73 FR 39756 (July 10, 2008) (SR–NASDAQ–2008–057) (notice of filing and immediate effectiveness); 59588 (March 17, 2009), 74 FR 12410 (March 24, 2009) (SR–NASDAQ–2009–025) (notice of filing and immediate effectiveness); and 61347 (January 13, 2010), 75 FR 3513 (January 21, 2010) (SR–NASDAQ–2010–003) (notice of filing and immediate effectiveness).

[5] 17 CFR 240.19b–4(f)(6)(iii).

[6] *See* Securities Exchange Act Release No. 60952 (November 6, 2009), 74 FR 59277 (November 17, 2009) (SR–NASDAQ–2009–099) (notice of filing and immediate effectiveness); and Chapter IV, Section 6, Supplementary Material .05 to Section 6.

participate in both the $0.50 Strike Program and the $1 Strike Program. Under the $1 Strike Program, new series with $1 intervals are not permitted to be listed within $0.50 of an existing $2.50 strike price in the same series, except that strike prices of $2 and $3 are permitted to be listed within $0.50 of a $2.50 strike price for classes also selected to participate in the $0.50 Strike Program.[7] Under the Exchange's current Chapter IV, Section 6, for classes selected to participate in both the $0.50 Strike Program and the $1 Strike Program, the Exchange may either: (a) List a $3.50 strike but not list a $4 strike; or (b) list a $4 strike but not list a $3.50 strike. For example, if a $3.50 strike for an option class in both the $0.50 and $1 Strike Programs was listed, the next highest permissible strike price would be $5.00. Alternatively, if a $4 strike was listed, the next lowest permissible strike price would be $3.00. The intent of the $0.50 Strike Program was to expand the ability of investors to hedge risks associated with stocks trading at or under $3 and to provide finer intervals of $0.50, beginning at $1 up to $3.50. As a result, the Exchange believes that the current filing is consistent with the purpose of the $0.50 Strike Program and will permit the Exchange to fill in any existing gaps resulting from having to choose whether to list a $3.50 or $4 strike for options classes in both the $0.50 and $1 Strike Programs.

Therefore, the Exchange is submitting the current filing to permit the listing of concurrent $3.50 and $4 strikes for classes that are selected to participate in both the $0.50 Strike Program and the $1 Strike Program. To effect this change, the Exchange is proposing to amend Chapter IV, Section 6, Supplementary Material .02(b) to Section 6 by adding $4 to the strike prices of $2 and $3 currently permitted if a class participates in both the $0.50 Strike Program and the $1 Strike Program.

The Exchange is also proposing to amend the current rule text to delete references to "$2.50 strike prices" (and the example utilizing $2.50 strike prices) and to replace those references with broader language, *e.g.,* "existing strike prices."

Finally, the Exchange is proposing technical, housekeeping rule changes to Chapter IV, Section 2, Supplementary Material .02 to Section 6 to conform formatting and punctuation and to Chapter IV, Section 6, Supplementary Material .09 to Section 6 to ensure consistency of internal numbering.

2. Statutory Basis

The Exchange believes that its proposal is consistent with Section 6(b) of the Act[8] in general, and furthers the objectives of Section 6(b)(5) of the Act[9] in particular, in that it is designed to prevent fraudulent and manipulative acts and practices, to promote just and equitable principles of trade, to foster cooperation and coordination with persons engaged in facilitating transactions in securities, and to remove impediments to and perfect the mechanisms of a free and open market and a national market system, by permitting the Exchange to list more granular strikes on options overlying lower priced securities, which the Exchange believes will provide investors with greater flexibility by allowing them to establish positions that are better tailored to meet their investment objectives.

B. Self-Regulatory Organization's Statement on Burden on Competition

NASDAQ does not believe that the proposed rule change will result in any burden on competition that is not necessary or appropriate in furtherance of the purposes of the Act.

C. Self-Regulatory Organization's Statement on Comments on the Proposed Rule Change Received From Members, Participants, or Others

Written comments were neither solicited nor received.

III. Date of Effectiveness of the Proposed Rule Change and Timing for Commission Action

Because the foregoing proposed rule change does not significantly affect the protection of investors or the public interest, does not impose any significant burden on competition, and, by its terms, does not become operative for 30 days from the date on which it was filed, or such shorter time as the Commission may designate, it has become effective pursuant to Section 19(b)(3)(A)[10] of the Act and Rule 19b–4(f)(6)[11] thereunder. The Exchange provided the Commission with written notice of its intent to file the proposed rule change, along with a brief description and text of the proposed rule change, at least five business days prior to the date of filing the proposed rule change.

The Exchange has requested that the Commission waive the 30-day operative delay to permit the Exchange to compete with other exchanges whose rules permit concurrent listing of $3.50 and $4 strikes for classes similarly participating in both a $0.50 strike program and a $1 strike program. The Commission finds that waiver of the operative delay is consistent with the protection of investors and the public interest because such waiver will encourage fair competition among the exchanges. Therefore, the Commission designates the proposal operative upon filing.[12]

At any time within 60 days of the filing of the proposed rule change, the Commission may summarily abrogate such rule change if it appears to the Commission that such action is necessary or appropriate in the public interest, for the protection of investors, or otherwise in furtherance of the purposes of the Act.

IV. Solicitation of Comments

Interested persons are invited to submit written data, views, and arguments concerning the foregoing, including whether the proposed rule change is consistent with the Act. Comments may be submitted by any of the following methods:

Electronic Comments

- Use the Commission's Internet comment form (*http://www.sec.gov/rules/sro.shtml);* or
- Send an e-mail to *rule-comments@sec.gov.* Please include File Number SR–NASDAQ–2010–038 on the subject line.

Paper Comments

- Send paper comments in triplicate to Elizabeth M. Murphy, Secretary, Securities and Exchange Commission, 100 F Street, NE., Washington, DC 20549–1090.

All submissions should refer to File Number SR–NASDAQ–2010–038. This file number should be included on the subject line if e-mail is used. To help the Commission process and review your comments more efficiently, please use only one method. The Commission will post all comments on the Commission's Internet Web site (*http://www.sec.gov/rules/sro.shtml*). Copies of the submission, all subsequent amendments, all written statements with respect to the proposed rule change that are filed with the Commission, and all written communications relating to the proposed rule change between the

[7] *See* Chapter IV, Section 6, Supplementary Material .02(b) to Section 6.

[8] 15 U.S.C. 78f(b).

[9] 15 U.S.C. 78f(b)(5).

[10] 15 U.S.C. 78s(b)(3)(A).

[11] 17 CFR 240.19b–4(f)(6).

[12] For purposes only of waiving the 30-day operative delay, the Commission has considered the proposed rule's impact on efficiency, competition, and capital formation. *See* 15 U.S.C. 78c(f).

Commission and any person, other than those that may be withheld from the public in accordance with the provisions of 5 U.S.C. 552, will be available for Web site viewing and printing in the Commission's Public Reference Room, 100 F Street, NE., Washington, DC 20549, on official business days between the hours of 10 a.m. and 3 p.m. Copies of the filing also will be available for inspection and copying at the principal office of the Exchange. All comments received will be posted without change; the Commission does not edit personal identifying information from submissions. You should submit only information that you wish to make available publicly. All submissions should refer to File Number SR–NASDAQ–2010–038 and should be submitted on or before April 14, 2010.

For the Commission, by the Division of Trading and Markets, pursuant to delegated authority.[13]

Florence E. Harmon,

Deputy Secretary.

[FR Doc. 2010–6515 Filed 3–23–10; 8:45 am]

BILLING CODE 8011–01–P

SECURITIES AND EXCHANGE COMMISSION

[Release No. 34–61732; File No. SR–CBOE–2010–027]

Self-Regulatory Organizations; Chicago Board Options Exchange, Incorporated; Notice of Filing and Immediate Effectiveness of a Proposed Rule Change To Amend CBOE Rule 31.85 to, Among Other Things, Prohibit Broker Discretionary Voting on the Elections of Directors

March 18, 2010.

Pursuant to Section 19(b)(1) of the Securities Exchange Act of 1934 (the "Act"),[1] and Rule 19b–4 thereunder,[2] notice is hereby given that on March 4, 2010, the Chicago Board Options Exchange, Incorporated (the "Exchange" or "CBOE") filed with the Securities and Exchange Commission (the "Commission") the proposed rule change as described in Items I and II below, which Items have been prepared by the Exchange. The Exchange filed the proposal as a "non-controversial" proposed rule change pursuant to Section 19(b)(3)(A)(iii) of the Act[3] and Rule 19b–4(f)(6) thereunder.[4] The Commission is publishing this notice to solicit comments on the proposed rule change from interested persons.

I. Self-Regulatory Organization's Statement of the Terms of Substance of the Proposed Rule Change

CBOE proposes to amend CBOE Rule 31.85 to eliminate broker discretionary voting for all elections of directors at shareholder meetings, whether contested or not, except for companies registered under the Investment Company Act of 1940 (the "1940 Act"), to amend CBOE Rule 31.85 to preclude broker discretionary voting on a matter that materially amends an investment advisory contract with an investment company, and to define that a material amendment to an investment advisory contract would include any proposal to obtain shareholder approval of an investment company's investment advisory contract with a new investment advisor The text of the proposed rule change is available on the Exchange's Web site (*http://www.cboe.org/legal*), at the Exchange's Office of the Secretary, and at the Commission.

II. Self-Regulatory Organization's Statement of the Purpose of, and Statutory Basis for, the Proposed Rule Change

In its filing with the Commission, the self-regulatory organization included statements concerning the purpose of and basis for the proposed rule change and discussed any comments it received on the proposed rule change. The text of those statements may be examined at the places specified in Item IV below. The Exchange has prepared summaries, set forth in sections A, B, and C below, of the most significant parts of such statements.

A. Self-Regulatory Organization's Statement of the Purpose of, and the Statutory Basis for, the Proposed Rule Change

1. Purpose

A shareholder of a public company may hold shares either directly, as the record holder, or indirectly, as the beneficial holder, with the shares held in the name of the beneficial shareholder's broker-dealer, bank nominee, or custodian ("securities intermediary"), which is the record holder.[5] The latter generally is referred to as holding securities in "street name."[6] The number of beneficial owners holding securities in street name has increased significantly over the past thirty-three years.

Currently, CBOE Rule 31.85 permits brokers to vote without voting instructions from the beneficial owner on uncontested elections of directors.[7] Rule 31.85 also lays out a list of enumerated items for which a member may not give a proxy to vote without instructions from the beneficial owner.[8] This list does not include the election of directors. Due to the increase in the holding of securities in street name, the impact of the broker vote on the election of directors has become increasingly significant. At the same time, the number of proxy campaigns, such as "just vote no" or "withhold" campaigns, that have targeted the election of directors without a formal contest has also increased. This has made the "uncontested" election of directors a more controversial, as opposed to routine, matter.[9]

In light of this development, the New York Stock Exchange proposed a rule filing to declare the election of directors ineligible for broker discretionary voting.[10] The Commission approved this filing, as amended, on July 1, 2009.[11] Correspondingly, CBOE proposes to amend CBOE Rule 31.85 to add all elections of directors at shareholder meetings whether contested or not, except for companies registered under the 1940 Act, to the list of enumerated items for which a member may not give a proxy to vote without instructions from the beneficial owner.

CBOE also proposes to amend CBOE Rule 31.85 to preclude broker discretionary voting on a matter that materially amends an investment advisory contract with an investment company and to define that a material amendment to an investment advisory contract would include any proposal to obtain shareholder approval of an investment company's investment advisory contract with a new investment advisor for which shareholder approval is required by the 1940 Act and the rules thereunder. These proposed amendments will help ensure the full and effective voting rights of investment company shareholders on material matters.

2. Statutory Basis

The Exchange believes the proposed rule change is consistent with the

[13] 17 CFR 200.30–3(a)(12).

[1] 15 U.S.C. 78s(b)(1).

[2] 17 CFR 240.19b–4.

[3] 15 U.S.C. 78s(b)(3)(A)(iii).

[4] 17 CFR 240.19b–4(f)(6).

[5] *See* Commission Release No. 34–60215 (July 1, 2009).

[6] *See supra* note 2 [sic].

[7] *See* CBOE Rule 31.85(a), which explains the process and situations in which brokers may vote without voting instructions from the beneficial owner.

[8] *See* CBOE Rule 31.85(b).

[9] *See supra* note 2 [sic].

[10] *See* SR–NYSE–2006–92.

[11] *See supra* note 2 [sic].

Securities Exchange Act of 1934 (the "Act") [12] and the rules and regulations thereunder and, in particular, the requirements of Section 6(b) of the Act.[13] The Exchange believes the proposed rule change is consistent with the Section 6(b)(5) [14] requirements that the rules of an exchange be designed to promote just and equitable principles of trade, to prevent fraudulent and manipulative acts, to remove impediments to and to perfect the mechanism for a free and open market and a national market system, and, in general, to protect investors and the public interest. Specifically, the Exchange believes that the proposed rule change will protect investors and the public interest by ensuring better corporate governance and transparency of the election process for directors and by promoting greater uniformity with the proxy rules of other exchanges.[15] In particular, for Exchange member firms that are also members of other exchanges, confusion might arise as to which exchange's proxy voting rules are applicable to a company listed on the Exchange if there are disparities between proxy voting rules of different exchanges.[16] The proposed rule change will better enfranchise shareholders and enhance corporate governance and accountability to shareholders.[17]

B. Self-Regulatory Organization's Statement on Burden on Competition

CBOE does not believe that the proposed rule change will impose any burden on competition not necessary or appropriate in furtherance of the purposes of the Act.

C. Self-Regulatory Organization's Statement on Comments on the Proposed Rule Change Received From Members, Participants, or Others

No written comments were solicited or received with respect to the proposed rule change.

III. Date of Effectiveness of the Proposed Rule Change and Timing for Commission Action

The Exchange has filed the proposed rule change pursuant to Section 19(b)(3)(A)(iii) of the Act [18] and Rule 19b–4(f)(6) thereunder.[19] Because the proposed rule change does not: (i) Significantly affect the protection of investors or the public interest; (ii) impose any significant burden on competition; and (iii) by its terms, become operative prior to 30 days from the date on which it was filed, or such shorter time as the Commission may designate, if consistent with the protection of investors and the public interest, the proposed rule change has become effective pursuant to Section 19(b)(3)(A) of the Act [20] and Rule 19b-4(f)(6)(iii) thereunder.[21]

A proposed rule change filed under Rule 19b–4(f)(6) [22] normally does not become operative prior to 30 days after the date of the filing. However, pursuant to Rule 19b4(f)(6)(iii),[23] the Commission may designate a shorter time if such action is consistent with the protection of investors and the public interest. The Exchange has requested the Commission to waive the 30-day operative delay so that the proposal may become operative immediately upon filing. In making this request, the Exchange stated that the proposal is based upon the rules of NYSE and NYSE Amex. The Exchange stated that waiver of the 30-day operative delay will allow the change to become operative immediately and conform to the Commission's desire to eliminate any disparities involving voting.

The Commission believes that the waiver of the 30-day operative delay period is consistent with the protection of investors and the public interest.[24] The proposal would permit the Exchange to comply with the Commission's stated goal that self-regulatory organizations who currently allow members to use discretionary voting for director elections conform their rules to the NYSE's rules to eliminate any voting disparities depending on where the shares are held. Further, the proposal would conform the Exchange's rule to the NYSE's rule with respect to voting on investment advisory contracts. Moreover, the Commission notes that the NYSE's adopted rule changes were subject to full notice and comment, and considered and approved by the Commission.[25] Based on the above, the Commission finds that waiving the 30-day operative delay period is consistent with the protection of investors and the public interest and the proposal is therefore deemed effective upon filing.

At any time within 60 days of the filing of the proposed rule change, the Commission may summarily abrogate such rule change if it appears to the Commission that such action is necessary or appropriate in the public interest, for the protection of investors, or otherwise in furtherance of the purposes of the Act.

IV. Solicitation of Comments

Interested persons are invited to submit written data, views, and arguments concerning the foregoing, including whether the proposed rule change is consistent with the Act. Comments may be submitted by any of the following methods:

Electronic Comments

- Use the Commission's Internet comment form (*http://www.sec.gov/rules/sro.shtml);* or
- Send an e-mail to *rule-comments@sec.gov.* Please include File Number SR–CBOE–2010–027 on the subject line.

Paper Comments

- Send paper comments in triplicate to Elizabeth M. Murphy, Secretary, Securities and Exchange Commission, 100 F Street, NE., Washington, DC 20549–1090.

All submissions should refer to File Number SR–CBOE–2010–027. This file number should be included on the subject line if e-mail is used. To help the Commission process and review your comments more efficiently, please use only one method. The Commission will post all comments on the Commission's Internet Web site (*http://www.sec.gov/rules/sro.shtml).* Copies of the submission, all subsequent amendments, all written statements with respect to the proposed rule change that are filed with the Commission, and all written communications relating to the proposed rule change between the Commission and any person, other than those that may be withheld from the public in accordance with the provisions of 5 U.S.C. 552, will be available for Web site viewing and printing in the Commission's Public Reference Room, 100 F Street, NE., Washington, DC 20549, on official business days between the hours of 10

[12] 15 U.S.C. 78s(b)(1).

[13] 15 U.S.C. 78f(b).

[14] 15 U.S.C. 78f(b)(5).

[15] See Securities Exchange Act Release No. 34–61292 (January 5, 2010), 75 FR 1664 (January 12, 2010) (SR–NYSEAmex–2009–93).

[16] *See supra* note 12 [sic].

[17] *See supra* note 2 [sic].

[18] 15 U.S.C. 78s(b)(3)(A)(iii).

[19] 17 CFR 240.19b–4(f)(6).

[20] 15 U.S.C. 78s(b)(3)(A).

[21] 17 CFR 240.19b–4(f)(6)(iii). In addition, Rule 19b–4(f)(6)(iii) requires the Exchange to give the Commission written notice of the Exchange's intent to file the proposed rule change, along with a brief description and text of the proposed rule change, at least five business days prior to the date of filing of the proposed rule change, or such shorter time as designated by the Commission. The Exchange has satisfied the pre-filing requirement.

[22] 17 CFR 240.19b–4(f)(6).

[23] 17 CFR 240.19b–4(f)(6)(iii).

[24] For purposes only of waiving the operative delay for this proposal, the Commission has considered the proposed rule's impact on efficiency, competition, and capital formation. *See* 15 U.S.C. 78c(f).

[25] *See supra* note 5.

a.m. and 3 p.m. Copies of such filing also will be available for inspection and copying at the principal office of the Exchange. All comments received will be posted without change; the Commission does not edit personal identifying information from submissions. You should submit only information that you wish to make available publicly. All submissions should refer to File Number SR–CBOE–2010–027 and should be submitted on or before April 14, 2010.

For the Commission, by the Division of Trading and Markets, pursuant to delegated authority.[26]

Florence E. Harmon,

Deputy Secretary.

[FR Doc. 2010–6514 Filed 3–23–10; 8:45 am]

BILLING CODE 8011–01–P

SECURITIES AND EXCHANGE COMMISSION

[Release No. 34–61731; File No. SR–ISE–2010–18]

Self-Regulatory Organizations; International Securities Exchange, LLC; Notice of Filing and Immediate Effectiveness of Proposed Rule Change To Adopt a Fee Credit

March 18, 2010.

Pursuant to Section 19(b)(1) of the Securities Exchange Act of 1934 (the "Act"),[1] and Rule 19b–4 thereunder,[2] notice is hereby given that on March 1, 2010, the International Securities Exchange, LLC (the "Exchange" or the "ISE") filed with the Securities and Exchange Commission the proposed rule change, as described in Items I, II, and III below, which items have been prepared by the self-regulatory organization. The Commission is publishing this notice to solicit comments on the proposed rule change from interested persons.

I. Self-Regulatory Organization's Statement of the Terms of Substance of the Proposed Rule Change

The ISE is proposing to amend its Schedule of Fees by adopting a per contract fee credit related to the execution on ISE of customer orders exposed to members before those orders are sent out for execution on another exchange through the intermarket linkage. The text of the proposed rule change is available on the Exchange's Web site (*http://www.ise.com*), at the principal office of the Exchange, and at the Commission's Public Reference Room.

II. Self-Regulatory Organization's Statement of the Purpose of, and Statutory Basis for, the Proposed Rule Change

In its filing with the Commission, the self-regulatory organization included statements concerning the purpose of, and basis for, the proposed rule change and discussed any comments it received on the proposed rule change. The text of these statements may be examined at the places specified in Item IV below. The self-regulatory organization has prepared summaries, set forth in sections A, B and C below, of the most significant aspects of such statements.

A. Self-Regulatory Organization's Statement of the Purpose of, and Statutory Basis for, the Proposed Rule Change

1. Purpose

Before a Primary Market Maker ("PMM") sends a customer order to another exchange for execution when ISE is not at the national best bid or offer ("NBBO"), the Exchange exposes these customer orders to all its members to give them an opportunity to match the NBBO. This exposure is intended to allow ISE to retain more order flow by giving these customer orders additional opportunity to be executed at the NBBO at ISE, which also reduces PMM costs by reducing the number of orders they must send to other exchanges on behalf of customer orders.

Specifically, before a PMM sends an order on behalf of a customer, the customer order is exposed at the NBBO price for a period established by the Exchange not to exceed one second. During this exposure period, Exchange members may enter responses up to the size of the order being exposed in the regular trading increment applicable to the option. The Exchange currently has fee waivers in place for members who step up and match or improve the NBBO during the exposure period.[3] If at the end of the exposure period, the order is executable at the then-current NBBO and ISE is not at the then-current NBBO, the order is executed against responses that equal or better the then-current NBBO. The exposure period is terminated if the exposed order becomes executable on the ISE at the prevailing NBBO or if the Exchange receives an unrelated order that could trade against the exposed order at the prevailing NBBO price. If, after an order is exposed, the order is not executed in full on the Exchange at the then-current NBBO or better, and it is marketable against the then-current NBBO, the PMM sends an order on the customer's behalf for the balance of the order as provided in Rule 803(c)(2)(ii). If the balance of the order is not marketable against the then-current NBBO, it is placed on the ISE book.

All customer orders, including professional customer orders, receive trade through protection under the ISE's rules.[4] Therefore, all customer orders are exposed when ISE is not at the best bid or offer. Members, however, do not know whether an order being exposed is for a Priority Customer[5] or a professional customer. Members have a natural incentive to step up to trade against Priority Customers as they view this as providing a service to retail customers. Members do not have a natural incentive to trade against professional customers who they view as their competitors. Thus, to encourage members to participate in the flash auction and thereby keep trades at the Exchange, ISE proposes to adopt a fee credit. Specifically, ISE proposes to adopt a $0.20 per contract fee credit for members who execute a transaction as a response to a Professional Order[6] in the Exchange's flash auction.

2. Basis

The basis under the Securities Exchange Act of 1934 (the "Exchange Act") for this proposed rule change is the requirement under Section 6(b)(4) that an exchange have an equitable allocation of reasonable dues, fees and other charges among its members and other persons using its facilities. In particular, the proposed rule change will allow ISE to retain more order flow by giving these customer orders additional opportunity to be executed ISE at the NBBO or better and will also reduce PMM costs by reducing the number of orders they must send to other exchanges for execution.

B. Self-Regulatory Organization's Statement on Burden on Competition

The proposed rule change does not impose any burden on competition that is not necessary or appropriate in furtherance of the purposes of the Act.

[26] 17 CFR 200.30–3(a)(12).

[1] 15 U.S.C. 78s(b)(1).

[2] 17 CFR 240.19b–4.

[3] *See* Exchange Act Release Nos. 58164 (July 15, 2008), 73 FR 42638 (July 22, 2008); 58216 (July 23, 2008), 73 FR 44302 (July 30, 2008).

[4] *See* ISE Rule 1902.

[5] A Priority Customer is defined in ISE Rule 100(a)(37A) as a person or entity that is not a broker or dealer in securities, and does not place more than 390 orders in listed options per day on average during a calendar month for its own beneficial account(s).

[6] A Professional Order is defined in ISE Rule 100(a)(37C) as an order that is for the account of a person or entity that is not a Priority Customer.

C. Self-Regulatory Organization's Statement on Comments on the Proposed Rule Change Received From Members, Participants or Others

The Exchange has not solicited, and does not intend to solicit, comments on this proposed rule change. The Exchange has not received any unsolicited written comments from members or other interested parties.

III. Date of Effectiveness of the Proposed Rule Change and Timing for Commission Action

The foregoing rule change has become effective pursuant to Section 19(b)(3) of the Act [7] and Rule 19b–4(f)(2) [8] thereunder. At any time within 60 days of the filing of such proposed rule change, the Commission may summarily abrogate such rule change if it appears to the Commission that such action is necessary or appropriate in the public interest, for the protection of investors, or otherwise in furtherance of the purposes of the Act.

IV. Solicitation of Comments

Interested persons are invited to submit written data, views, and arguments concerning the foregoing, including whether the proposed rule change is consistent with the Act. Comments may be submitted by any of the following methods:

Electronic Comments

- Use the Commission's Internet comment form (*http://www.sec.gov/rules/sro.shtml*); or
- Send an e-mail to *rule-comments@sec.gov.* Please include File No. SR–ISE–2010–18 on the subject line.

Paper Comments

- Send paper comments in triplicate to Elizabeth M. Murphy, Secretary, Securities and Exchange Commission, 100 F Street, NE., Washington, DC 20549–1090.

All submissions should refer to File No. SR–ISE–2010–18. This file number should be included on the subject line if e-mail is used. To help the Commission process and review your comments more efficiently, please use only one method. The Commission will post all comments on the Commission's Internet Web site (*http://www.sec.gov/rules/sro.shtml*). Copies of the submission,[9] all subsequent amendments, all written statements with respect to the proposed rule change that are filed with the Commission, and all written communications relating to the proposed rule change between the Commission and any person, other than those that may be withheld from the public in accordance with the provisions of 5 U.S.C. 552, will be available for Web site viewing and printing in the Commission's Public Reference Room, 100 F Street, NE., Washington, DC 20549, on official business days between the hours of 10 a.m. and 3 p.m. Copies of such filing also will be available for inspection and copying at the principal office of ISE. All comments received will be posted without change; the Commission does not edit personal identifying information from submissions. You should submit only information that you wish to make available publicly. All submissions should refer to File No. SR–ISE–2010–18 and should be submitted on or before April 14, 2010.

For the Commission, by the Division of Trading and Markets, pursuant to delegated authority.[10]

Florence E. Harmon,

Deputy Secretary.

[FR Doc. 2010–6513 Filed 3–23–10; 8:45 am]

BILLING CODE 8011–01–P

[7] 15 U.S.C. 78s(b)(3)(A).

[8] 17 CFR 240.19b–4(f)(2).

[9] The text of the proposed rule change is available on the Commission's Web site at *http://www.sec.gov.*

[10] 17 CFR 200.30–3(a)(12).

SECURITIES AND EXCHANGE COMMISSION

[Release No. 34–61726; File No. SR–NYSEAMEX–2010–21]

Self-Regulatory Organizations; Notice of Filing and Immediate Effectiveness of Proposed Rule Change by NYSE Amex LLC Relating to Cabinet Trades

March 17, 2010.

Pursuant to Section 19(b)(1) of the Securities Exchange Act of 1934 (the "Act") [1] and Rule 19b–4 thereunder,[2] notice is hereby given that, on March 2, 2010, NYSE Amex LLC ("NYSE Amex" or the "Exchange") filed with the Securities and Exchange Commission (the "Commission") the proposed rule change as described in Items I and II below, which Items have been prepared by the Exchange. The Commission is publishing this notice to solicit comments on the proposed rule change from interested persons.

[1] 15 U.S.C. 78s(b)(1).

[2] 17 CFR 240.19b–4.

I. Self-Regulatory Organization's Statement of the Terms of Substance of the Proposed Rule Change

The Exchange proposes to adopt Commentary .01 to Rule 968NY, Cabinet Trades, to permit transactions to take place at a price that is below $1 per option contract. The text of the proposed rule change is attached as Exhibit 5 to the 19b–4 form. A copy of this filing is available on the Exchange's Web site at *http://www.nyse.com,* at the Exchange's principal office and at the Commission's Public Reference Room.

II. Self-Regulatory Organization's Statement of the Purpose of, and Statutory Basis for, the Proposed Rule Change

In its filing with the Commission, the self-regulatory organization included statements concerning the purpose of, and basis for, the proposed rule change and discussed any comments it received on the proposed rule change. The text of those statements may be examined at the places specified in Item IV below. The Exchange has prepared summaries, set forth in sections A, B, and C below, of the most significant parts of such statements.

A. Self-Regulatory Organization's Statement of the Purpose of, and the Statutory Basis for, the Proposed Rule Change

1. Purpose

The purpose of this filing is to allow accommodation transactions ("Cabinet Trades") to take place at a price that is below $1 per option contract. The Exchange proposes to adopt a rule based on CBOE Rule 6.54, Interpretations and Policies .03.[3]

Cabinet trading is generally conducted in accordance with the Exchange Rules, except as provided in Exchange Rule 968NY Cabinet Trades (Accommodation Transactions), which sets forth specific procedures for engaging in cabinet trades. Rule 968NY currently provides for cabinet transactions to occur via open outcry at a cabinet price of a $1 per option contract in any options series open for trading in the Exchange, except that the Rule is not applicable to trading in option classes participating in the Penny Pilot Program. Under the procedures, bids and offers (whether opening or closing a position) at a price of $1 per option contract may be represented in the trading crowd by a Floor Broker or by a Market-Maker or

[3] *See* Securities Exchange Act Release No. 59188 (December 30, 2008), 74 FR 480 (January 6, 2009)(SR–CBOE–2008–133).

provided in response to a request by a Trading Official, a Floor Broker or a Market-Maker, but must yield priority to all resting orders in the Cabinet (those orders held by the Trading Official, and which resting cabinet orders may be closing only). So long as both the buyer and the seller yield to orders resting in the cabinet book, opening cabinet bids can trade with opening cabinet offers at $1 per option contract.

The purpose of this rule change is to temporarily amend the procedures through July 1, 2010 to allow transactions to take place in open outcry at a price of at least $0 but less than $1 per option contract. These lower priced transactions would be traded pursuant to the same procedures applicable to $1 cabinet trades, except that (i) bids and offers for opening transactions would only be permitted to accommodate closing transactions in order to limit use of the procedure to liquidations of existing positions, and (ii) the procedures would also be made available for trading in option classes participating in the Penny Pilot Program.[4] The Exchange believes that allowing a price of at least $0 but less than $1 will better accommodate the closing of options positions in series that are worthless or not actively traded, particularly due to recent market conditions which have resulted in a significant number of series being out-of-the-money. For example, a market participant might have a long position in a call series with a strike price of $100 and the underlying stock might now be trading at $30. In such an instance, there might not otherwise be a market for that person to close-out its position even at the $1 cabinet price (*e.g.,* the series might be quoted no bid).

As with other accommodation liquidations under Rule 968NY, transactions that occur for less than $1 will not be disseminated to the public on the consolidated tape. In addition, as with other accommodation liquidations under Rule 968NY, the transactions will be exempt from the Consolidated Options Audit Trail ("COATS") requirements of Exchange Rule 955NY. Order Format and System Entry Requirements. However, the Exchange will maintain quotation, order and transaction information for the transactions in the same format as the COATS data is maintained. In this regard, all transactions for less than $1 must be reported to the Exchange following the close of each business day.

2. Statutory Basis

The Exchange believes the proposed rule change is consistent with Section 6(b)[5] of the Securities Exchange Act of 1934 (the "Act"), in general, and furthers the objectives of Section 6(b)(5)[6] in particular in that it is designed to promote just and equitable principles of trade, to prevent fraudulent and manipulative acts, to remove impediments to and to perfect the mechanism for a free and open market and a national market system and, in general, to protect investors and the public interest. The Exchange believes that allowing for liquidations at a price less than $1 per option contract will better facilitate the closing of options positions that are worthless or not actively trading, especially in Penny Pilot issues where Cabinet Trades are not otherwise permitted.

B. Self-Regulatory Organization's Statement on Burden on Competition

The Exchange does not believe that the proposed rule change will impose any burden on competition that is not necessary or appropriate in furtherance of the purposes of the Act.

C. Self-Regulatory Organization's Statement on Comments on the Proposed Rule Change Received From Members, Participants, or Others

No written comments were solicited or received with respect to the proposed rule change.

III. Date of Effectiveness of the Proposed Rule Change and Timing for Commission Action

The foregoing rule change has become effective pursuant to Section 19(b)(3)(A) of the Act[7] and Rule 19b–4(f)(6) thereunder because the proposal does not: (i) Significantly affect the protection of investors or the public interest; (ii) impose any significant burden on competition; and (iii) by its terms, become operative for 30 days from the date on which it was filed, or such shorter time as the Commission may designate if consistent with the protection of investors and the public interest.[8]

The Exchange has requested that the Commission waive the 30-day operative delay period. In making such request, the Exchange stated that immediate operability will level the current competitive landscape by permitting the Exchange to implement changes similar to those implemented by the CBOE. The Commission hereby grants the request. The Commission notes that the proposal is nearly identical to the rules of another self-regulatory organization,[9] and believes that waiver of the 30-day delay will enable the Exchange to provide a means for investors to close out positions that are worthless or not actively trading without delay. Based on the above, the Commission believes it is consistent with the protection of investors and the public interest to waive the 30-day operative delay and designates the proposal as operative upon filing.[10]

At any time within 60 days of the filing of the proposed rule change, the Commission may summarily abrogate such proposed rule change if it appears to the Commission that such action is necessary or appropriate in the public interest, for the protection of investors, or otherwise in furtherance of the purposes of the Act.

IV. Solicitation of Comments

Interested persons are invited to submit written data, views, and arguments concerning the foregoing, including whether the proposed rule change is consistent with the Act. Comments may be submitted by any of the following methods:

Electronic Comments

- Use the Commission's Internet comment form (*http://www.sec.gov/rules/sro.shtml*); or
- Send an e-mail to *rule-comments@sec.gov.* Please include File Number SR–NYSEAmex–2010–21 on the subject line.

[4] Currently the $1 cabinet trading procedures are limited to options classes traded in $0.05 or $0.10 standard increment. The $1 cabinet trading procedures are not available in Penny Pilot Program classes because in those classes an option series can trade in a standard increment as low as $0.01 per share (or $1.00 per option contract with a 100 share multiplier). Because the instant rule change would allow trading below $0.01 per share (or $1.00 per option contract with a 100 share multiplier), the procedures would be made available for all classes, including those classes participating in the Penny Pilot Program.

[5] 15 U.S.C. 78f(b).

[6] 15 U.S.C. 78f(b)(5).

[7] 15 U.S.C. 78s(b)(3)(A).

[8] 17 CFR 240.19b–4(f)(6). In addition, Rule 19b–4(f)(6)(iii) requires the Exchange to give the Commission written notice of the Exchange's intent to file the proposed rule change along with a brief description and text of the proposed rule change, at least five business days prior to the date of filing of the proposed rule change, or such shorter time as designated by the Commission. The Exchange has satisfied the pre-filing requirement.

[9] *See* CBOE Rule 6.54, Interpretations and Policies .03.

[10] For purposes only of waiving the operative delay for this proposal, the Commission has considered the proposed rule's impact on efficiency, competition, and capital formation. *See* 15 U.S.C. 78c(f).

Paper Comments

• Send paper comments in triplicate to Elizabeth M. Murphy, Secretary, Securities and Exchange Commission, 100 F Street, NE., Washington, DC 20549–1090.

All submissions should refer to File Number SR–NYSEAmex–2010–21. This file number should be included on the subject line if e-mail is used. To help the Commission process and review your comments more efficiently, please use only one method. The Commission will post all comments on the Commission's Internet Web site (*http://www.sec.gov/rules/sro.shtml*). Copies of the submission, all subsequent amendments, all written statements with respect to the proposed rule change that are filed with the Commission, and all written communications relating to the proposed rule change between the Commission and any person, other than those that may be withheld from the public in accordance with the provisions of 5 U.S.C. 552, will be available for Web site viewing and printing in the Commission's Public Reference Room on official business days between the hours of 10 a.m. and 3 p.m. Copies of the filing also will be available for inspection and copying at the Exchange's principal office and on its Internet Web site at *http://www.nyse.com.* All comments received will be posted without change; the Commission does not edit personal identifying information from submissions. You should submit only information that you wish to make available publicly. All submissions should refer to File Number SR–NYSEAmex–2010–21 and should be submitted on or before April 14, 2010.

For the Commission, by the Division of Trading and Markets, pursuant to delegated authority.[11]

Florence E. Harmon,

Deputy Secretary.

[FR Doc. 2010–6510 Filed 3–23–10; 8:45 am]

BILLING CODE 8011–01–P

[11] 17 CFR 200.30–3(a)(12).

SECURITIES AND EXCHANGE COMMISSION

[Release No. 34–61720; File No. SR–ISE–2010–20]

Self-Regulatory Organizations; International Securities Exchange, LLC; Notice of Filing and Immediate Effectiveness of Proposed Rule Change Relating to Fee Changes

March 16, 2010.

Pursuant to Section 19(b)(1) of the Securities Exchange Act of 1934 (the "Act") [1] and Rule 19b–4 thereunder,[2] notice is hereby given that on March 9, 2010, the International Securities Exchange, LLC (the "Exchange" or the "ISE") filed with the Securities and Exchange Commission ("Commission") the proposed rule change, as described in Items I, II, and III below, which Items have been prepared by the Exchange. The Commission is publishing this notice to solicit comment on the proposed rule change from interested persons.

I. Self-Regulatory Organization's Statement of the Terms of Substance of the Proposed Rule Change

The Exchange is proposing to amend its Schedule of Fees.

The text of the proposed rule change is available on the Exchange's Web site at *http://www.ise.com,* at the principal office of the Exchange, and at the Commission's Public Reference Room.

II. Self-Regulatory Organization's Statement of the Purpose of, and Statutory Basis for, the Proposed Rule Change

In its filing with the Commission, the Exchange included statements concerning the purpose of and basis for the proposed rule change and discussed any comments it received on the proposed rule change. The text of these statements may be examined at the places specified in Item IV below. The Exchange has prepared summaries, set forth in sections A, B, and C below, of the most significant aspects of such statements.

A. Self-Regulatory Organization's Statement of the Purpose of, and Statutory Basis for, the Proposed Rule Change

1. Purpose

In SR–ISE–2009–26, the Exchange adopted the term 'Singly Listed ETFs' to identify those ETF products that are listed only on ISE and for which the Exchange charges a fee of $0.18 per contract for customer transactions. Currently, the First Trust ISE Water ETF ("FIW") and the Claymore China Technology ETF ("CQQQ") are the only such ETFs listed on the Exchange's fee schedule. On March 9, 2010, ISE began listing options on the ProShares UltraPro Short Dow30 ("SDOW"), the ProShares UltraPro Dow30 ("UDOW"), the ProShares UltraPro Short MidCap400 ("SMDD"), the ProShares UltraPro MidCap400 ("UMDD"), the ProShares UltraPro Short Russell2000 ("SRTY") and the ProShares UltraPro Russell2000 ("URTY"). As of the date of this filing, SDOW, UDOW, SMDD, UMDD, SRTY and URTY are all singly listed on ISE. The Exchange therefore proposes to charge a fee of $0.18 per contract for customer transactions in options on SDOW, UDOW, SMDD, UMDD, SRTY and URTY. The Exchange also proposes to charge a Payment for Order Flow fee for transactions in options on these products.

2. Statutory Basis

The Exchange believes that the proposed rule change is consistent with the objectives of Section 6 of the Act,[3] in general, and furthers the objectives of Section 6(b)(4),[4] in particular, in that it is designed to provide for the equitable allocation of reasonable dues, fees and other charges among its members and other persons using its facilities.

B. Self-Regulatory Organization's Statement on Burden on Competition

The proposed rule change does not impose any burden on competition that is not necessary or appropriate in furtherance of the purposes of the Act.

C. Self-Regulatory Organization's Statement on Comments on the Proposed Rule Change Received From Members, Participants, or Others

The Exchange has not solicited, and does not intend to solicit, comments on this proposed rule change. The Exchange has not received any unsolicited written comments from members or other interested parties.

III. Date of Effectiveness of the Proposed Rule Change and Timing for Commission Action

The foregoing rule change has become effective pursuant to Section 19(b)(3) of the Act [5] and Rule 19b–4(f)(2) [6] thereunder. At any time within 60 days of the filing of such proposed rule change, the Commission may summarily

[1] 15 U.S.C. 78s(b)(1).

[2] 17 CFR 240.19b–4.

[3] 15 U.S.C. 78f.

[4] 15 U.S.C. 78f(b)(4).

[5] 15 U.S.C. 78s(b)(3)(A). [sic]

[6] 17 CFR 240.19b–4.

abrogate such rule change if it appears to the Commission that such action is necessary or appropriate in the public interest, for the protection of investors, or otherwise in furtherance of the purposes of the Act.

IV. Solicitation of Comments

Interested persons are invited to submit written data, views, and arguments concerning the foregoing, including whether the proposed rule change is consistent with the Act. Comments may be submitted by any of the following methods:

Electronic Comments

- Use the Commission's Internet comment form (*http://www.sec.gov/rules/sro.shtml*); or
- Send an e-mail to *rule-comments@sec.gov.* Please include File Number SR–ISE–2010–20 on the subject line.

Paper Comments

- Send paper comments in triplicate to Elizabeth M. Murphy, Secretary, Securities and Exchange Commission, 100 F Street, NE., Washington, DC 20549–1090.

All submissions should refer to File Number SR–ISE–2010–20. This file number should be included on the subject line if e-mail is used. To help the Commission process and review your comments more efficiently, please use only one method. The Commission will post all comments on the Commission's Internet Web site (*http://www.sec.gov/rules/sro.shtml*). Copies of the submission, all subsequent amendments, all written statements with respect to the proposed rule change that are filed with the Commission, and all written communications relating to the proposed rule change between the Commission and any person, other than those that may be withheld from the public in accordance with the provisions of 5 U.S.C. 552, will be available for Web site viewing and printing in the Commission's Public Reference Room, 100 F Street, NE., Washington, DC 20549, on official business days between the hours of 10 a.m. and 3 p.m. Copies of the filing will also be available for inspection and copying at the principal office of the self-regulatory organization. All comments received will be posted without change; the Commission does not edit personal identifying information from submissions. You should submit only information that you wish to make available publicly. All submissions should refer to File Number SR–ISE–2010–20 and should be submitted on or before April 14, 2010.

For the Commission, by the Division of Trading and Markets, pursuant to delegated authority.[7]

Florence E. Harmon,

Deputy Secretary.

[FR Doc. 2010–6508 Filed 3–23–10; 8:45 am]

BILLING CODE 8011–01–P

[7] 17 CFR 200.30–3(a)(12).

SECURITIES AND EXCHANGE COMMISSION

[Release No. 34–61721; File No. SR–NYSEArca–2010–14]

Self-Regulatory Organizations; NYSE Arca, Inc.; Notice of Filing of Proposed Rule Change Relating to the Listing of the United States Brent Oil Fund, LP

March 16, 2010.

Pursuant to Section 19(b)(1) of the Securities Exchange Act of 1934 ("Act")[1] and Rule 19b–4 thereunder,[2] notice is hereby given that, on March 3, 2010, NYSE Arca, Inc. ("Exchange" or "NYSE Arca") filed with the Securities and Exchange Commission ("Commission") the proposed rule change as described in Items I, II, and III below, which Items have been prepared by the Exchange. The Commission is publishing this notice to solicit comments on the proposed rule change from interested persons.

I. Self-Regulatory Organization's Statement of the Terms of Substance of the Proposed Rule Change

The Exchange proposes to list and trade pursuant to NYSE Arca Equities Rule 8.300 units ("Units") of the United States Brent Oil Fund, LP ("USBO" or "Partnership"). The text of the proposed rule change is available at the Exchange, the Commission's Public Reference Room, and *http://www.nyse.com.*

II. Self-Regulatory Organization's Statement of the Purpose of, and Statutory Basis for, the Proposed Rule Change

In its filing with the Commission, the self-regulatory organization included statements concerning the purpose of, and basis for, the proposed rule change and discussed any comments it received on the proposed rule change. The text of those statements may be examined at the places specified in Item IV below. The Exchange has prepared summaries, set forth in sections A, B, and C below, of the most significant parts of such statements.

[1] 15 U.S.C. 78s(b)(1).

[2] 17 CFR 240.19b–4.

A. Self-Regulatory Organization's Statement of the Purpose of, and the Statutory Basis for, the Proposed Rule Change

1. Purpose

Under NYSE Arca Equities Rule 8.300, the Exchange may propose to list and/or trade pursuant to unlisted trading privileges ("UTP") Partnership Units.[3] The Exchange proposes to list and trade the Units of United States Brent Oil Fund, LP pursuant to NYSE Arca Equities Rule 8.300.[4] The Commission has previously approved listing of similar limited partnerships on the American Stock Exchange LLC ("Amex") (now known as NYSE Amex LLC),[5] trading of such securities on the Exchange pursuant to UTP,[6] and, subsequently, their listing on the Exchange.[7] The Commission has also

[3] On May 25, 2006, the Commission approved NYSE Arca Equities Rule 8.300, which sets forth the rules related to listing and trading criteria for Partnership Units. *See* Securities Exchange Act Release No. 53875 (May 25, 2006), 71 FR 32164 (June 2, 2006) (SR–NYSEArca–2006–11) (approving trading pursuant to UTP of Partnership Units of the United States Oil Fund, LP). On July 11, 2007, the Commission approved the Exchange's proposal to trade pursuant to UTP Partnership Units of the United States Natural Gas Fund, LP. Securities Exchange Act Release No. 56042 (July 11, 2007), 72 FR 39118 (July 17, 2007) (SR–NYSEArca–2007–45).

[4] USBO has filed with the Commission Amendment No. 2 to Form S–1, dated January 22, 2010 (File No. 333–162015) (the "Registration Statement"). Unless otherwise noted, descriptions herein relating to USBO are based on the Registration Statement.

[5] *See* Securities Exchange Act Release Nos. 53582 (March 31, 2006), 71 FR 17510 (April 6, 2006) (SR–Amex–2005–127) (order approving Amex listing of United States Oil Fund, LP); 56831 (November 21, 2007), 72 FR 67612 (November 29, 2007) (SR–Amex–2007–98) (order approving Amex listing of United States 12 Month Oil Fund, LP and United States 12 Month Natural Gas Fund, LP); 55632 (April 13, 2007), 72 FR 19987 (April 20, 2007) (SR–Amex–2006–112) (order approving Amex listing of United States Natural Gas Fund, LP); 57188 (January 23, 2008), 73 FR 5607 (January 30, 2008) (SR–Amex–2007–70) (order approving Amex listing of United States Heating Oil Fund, LP and United States Gasoline Fund, LP).

[6] *See* Securities Exchange Act Release No. 56832 (November 21, 2007), 72 FR 67328 (November 28, 2007) (SR–NYSEArca–2007–102) (order approving UTP trading of United States 12 Month Oil Fund, LP and United States 12 Month Natural Gas Fund, LP); Securities Exchange Act Release No. 56042 (July 11, 2007), 72 FR 39118 (July 17, 2007) (SR–NYSEArca–2007–45) (order approving UTP trading of United States Natural Gas Fund, LP); Securities Exchange Act Release No. 57294 (February 8, 2008), 73 FR 8917 (February 15, 2008) (SR–NYSEArca–2007–78) (order approving UTP trading of United States Heating Oil Fund, LP and United States Gasoline Fund, LP).

[7] *See* Securities Exchange Act Release No. 58965 (November 17, 2008), 73 FR 71078 (November 24, 2008) (order approving listing on the Exchange of United States Oil Fund, LP, United States 12 Month Oil Fund, LP, United States Heating Oil Fund, LP, United States Gasoline Fund, LP, United States 12 Month Natural Gas Fund, LP and United States Natural Gas Fund, LP).

approved listing on the Exchange of the United States Short Oil Fund, LP.[8]

The Exchange proposes to list and trade pursuant to NYSE Arca Equities Rule 8.300 Units of USBO. According to the Registration Statement, the net assets of USBO will consist primarily of investments in futures contracts for crude oil, heating oil, gasoline, natural gas and other petroleum-based fuels that are traded on the ICE Futures Exchange, New York Mercantile Exchange (the "NYMEX"), or other U.S. and foreign exchanges (collectively, "Futures Contracts"). USBO may also invest in other crude oil-related investments such as cash-settled options on Futures Contracts, forward contracts for crude oil, cleared swap contracts and over-the-counter transactions that are based on the price of crude oil and other petroleum-based fuels, Futures Contracts and indices based on the foregoing ("Other Crude Oil-Related Investments" and, together with Futures Contracts, "Crude Oil Interests").

USBO will invest in Crude Oil Interests to the fullest extent possible without being leveraged or unable to satisfy its current or potential margin or collateral obligations with respect to its investments in Futures Contracts and Other Crude Oil-Related Investments. The primary focus of the General Partner will be investing in Futures Contracts and the management of investments in short-term obligations of the United States of two years or less ("Treasuries"), cash and/or cash equivalents for margining purposes and as collateral.

USBO will comply with the requirements of Rule 10A–3 [9] under the Securities Exchange Act of 1934 ("Act") [10] as it applies to limited partnerships. In addition, USBO will comply with the requirements of NYSE Arca Equities Rule 8.300. A minimum of 100,000 Units will be outstanding at the commencement of trading on the Exchange.

Overview of USBO [11]

United States Brent Oil Fund, LP, a Delaware limited partnership, is a commodity pool that will issue Units. It is managed and controlled by its general partner, United States Commodity Funds LLC ("General Partner"). The General Partner is a single member limited liability company formed in Delaware on May 10, 2005, that is registered as a commodity pool operator ("CPO") with the Commodity Futures Trading Commission ("CFTC") and is a member of the National Futures Association ("NFA"). Prior to June 13, 2008, the General Partner's name was Victoria Bay Asset Management, LLC. USBO will pay the General Partner a management fee of 0.75% of NAV on its average net assets.

The General Partner is not affiliated with a broker-dealer.

USBO Investment Objective and Policies

According to the Registration Statement, the investment objective of USBO is intended to have the daily changes in percentage terms of its Units' net asset value ("NAV") reflect the daily changes in percentage terms of the spot price of Brent crude oil as measured by the changes in the price of the futures contract on Brent crude oil as traded on ICE Futures Exchange that is the near month contract to expire, except when the near month contract is within two weeks of expiration, in which case the futures contract will be the next month contract to expire (the "Benchmark Futures Contract"), less USBO's expenses. It is not the intent of USBO to be operated in a fashion such that its NAV will equal, in dollar terms, the spot price of crude oil or any particular futures contract based on crude oil. USBO may invest in Crude Oil Interests other than the Benchmark Futures Contract, including to comply with accountability levels and position limits.

As a specific benchmark, the General Partner will endeavor to place USBO's trades in Futures Contracts and Other Crude Oil-Related-Investments and otherwise manage USBO's investments so that "A" will be within plus/minus 10 percent of "B", where:

- A is the average daily change in USBO's NAV for any period of 30 successive valuation days, *i.e.,* any NYSE Arca trading day as of which USBO calculates its NAV, and
- B is the average daily change in the price of the Benchmark Futures Contract over the same period.

An investment in the Units is intended to allow both retail and institutional investors to easily gain exposure to the crude oil market in a cost-effective manner. The Units are also expected to provide additional means for diversifying an investor's investments or hedging exposure to changes in crude oil prices.

The Benchmark Futures Contract will be changed from the near month contract to the next month contract over a four-day period. Each month, the Benchmark Futures Contract will change starting at the end of the day on the date two weeks prior to expiration of the near month contract for that month. During the first three days of the period, the applicable value of the Benchmark Futures Contract will be based on a combination of the near month contract and the next month contract as follows: (1) Day 1 will consist of 75% of the then near month contract's total return for the day, plus 25% of the total return for the day of the next month contract, (2) day 2 will consist of 50% of the then near month contract's total return for the day, plus 50% of the total return for the day of the next month contract, and (3) day 3 will consist of 25% of the then near month contract's total return for the day, plus 75% of the total return for the day of the next month contract. On day 4, the Benchmark Futures Contract will be the next month contract to expire at that time and that contract will remain the Benchmark Futures Contract until the beginning of the following month's change in the Benchmark Futures Contract over a four-day period.

On each day during the four-day period, the General Partner anticipates it will "roll" USBO's positions in oil investments by closing, or selling, a percentage of USBO's positions in Crude Oil Interests and reinvesting the proceeds from closing those positions in new Crude Oil Interests that reflect the change in the Benchmark Futures Contract. The anticipated monthly dates on which the Benchmark Futures Contract will be changed and the Crude Oil Interests will be "rolled" in 2010 and subsequent years will be posted on USBO's Web site at *http://www.unitedstatesbrentoilfund.com,* and are subject to change without notice.

According to the Registration Statement, the General Partner will employ a "neutral" investment strategy intended to track the changes in the price of the Benchmark Futures Contract regardless of whether the price goes up or goes down. USBO's "neutral" investment strategy is designed to permit investors generally to purchase and sell USBO's Units for the purpose of investing indirectly in crude oil in a cost-effective manner, and/or to permit participants in the crude oil or other industries to hedge the risk of losses in their crude oil-related transactions. This and certain risk factors discussed in the Registration Statement may cause a lack of correlation between the changes in USBO's NAV and the changes in the price of Brent crude oil. For example, USBO (i) may not be able to sell/buy the

[8] *See* Securities Exchange Act Release No. 59173 (December 29, 2008), 74 FR 490 (January 6, 2009) (SR–NYSEArca–2008–125) (order approving listing and trading of United States Short Oil Fund, LP).

[9] 17 CFR 240.10A–3.

[10] 15 U.S.C. 78a.

[11] Terms relating to USBO referred to, but not defined, herein are defined in the Registration Statement.

exact amount of positions in Futures Contracts and Other Crude Oil-Related Investments to have a perfect correlation with NAV; (ii) may not always be able to buy and sell Futures Contracts or Other Crude Oil-Related Investments at the market price; (iii) may not experience a perfect correlation between the Benchmark Futures Contract and the investments in Futures Contracts, Other Crude Oil-Related Investments and U.S. Treasuries, cash and cash equivalents; and (iv) will be required to pay brokerage fees and the management fee, which will have an effect on the correlation with NAV. Additional factors that may impact correlation with NAV are discussed in the Registration Statement.

USBO will create and redeem Units only in blocks of 100,000 Units called Creation Baskets and Redemption Baskets, respectively. Only Authorized Purchasers may purchase or redeem Creation Baskets or Redemption Baskets.

Clearing Broker. UBS Securities will act as a futures clearing broker for USBO. UBS Securities is registered in the U.S. with FINRA as a Broker-Dealer and with the CFTC as a Futures Commission Merchant. The clearing arrangements between the clearing broker and USBO generally are terminable by the clearing broker once the clearing broker has given USBO notice. Upon termination, the General Partner may be required to renegotiate or make other arrangements for obtaining similar services if USBO intends to continue trading in Futures Contracts or Other Crude Oil-Related Investments at its level of capacity at such time.

Administrator and Custodian. Brown Brothers Harriman & Co. is anticipated to be the registrar and transfer agent for the Units. Brown Brothers Harriman & Co. is also anticipated to be the Custodian for USBO. In this capacity, Brown Brothers Harriman & Co. will hold USBO's Treasuries, cash and cash equivalents pursuant to a custodial agreement. In addition, Brown Brothers Harriman & Co. will perform certain administrative and accounting services for USBO and will prepare certain SEC and CFTC reports on behalf of USBO.

Marketing Agent. USBO also plans to employ ALPS Distributors, Inc. as the marketing agent. USBO, through its marketing agent, will continuously offer Creation Baskets to and redeem Redemption Baskets from Authorized Purchasers and will receive and process creation and redemption orders from Authorized Purchasers.

Investment Strategy of USBO

According to the Registration Statement, USBO anticipates that the use of Futures Contracts, together with Other Crude Oil-Related Investments, as necessary, will produce price and total return results that closely track the investment goals of USBO.

USBO may employ spreads or straddles in its trading to mitigate the differences in its investment portfolio and its goal of tracking changes in the price of the Benchmark Futures Contract. USBO would use a spread when it chooses to take simultaneous long and short positions in futures written on the same underlying asset, but with different delivery months. The effect of holding such combined positions is to adjust the sensitivity of USBO to changes in the price relationship between futures contracts that will expire sooner and those that will expire later. USBO would use such a spread if the General Partner felt that taking such long and short positions, when combined with the rest of its holdings, would more closely track the investment goals of USBO, or if the General Partner felt it would lead to an overall lower cost of trading to achieve a given level of economic exposure to movements in Brent crude oil prices.

USBO will invest only in Futures Contracts and Other Crude Oil-Related Investments that are traded in sufficient volume to permit, in the opinion of the General Partner, ease of taking and liquidating positions in these financial interests. While Brent crude oil Futures Contracts traded on the ICE Futures Exchange can be physically settled, USBO does not intend to take or make physical delivery. However, USBO may from time to time trade in Other Crude Oil-Related Investments, including contracts based on the spot price of crude oil.

While USBO expects its ratio of margin and collateral posted to total assets to generally range from 10% to 20%, the General Partner endeavors to have the value of USBO's Treasuries, cash and cash equivalents, whether held by USBO or posted as margin or collateral, at all times approximate the aggregate market value of USBO's obligations under its Futures Contracts and Other Crude Oil-Related Investments. Borrowings will not be used by USBO, unless USBO is required to borrow money in the event of physical delivery, USBO trades in cash commodities, or for short-term needs created by unexpected redemptions. USBO does not plan to establish credit lines.

According to the Registration Statement, as part of its Other Crude Oil-Related Investments, USBO may purchase options on crude oil Futures Contracts on principal futures exchanges in pursuing its investment objective. USBO may enter into cleared swaps and non-exchange-traded derivatives transactions (also known as over-the-counter contracts), which are usually entered into between two parties. Each party to such contract bears the credit risk that the other party may not be able to perform its obligations under its contract.

Some crude oil-based derivatives transactions contain fairly generic terms and conditions and are available from a wide range of participants. Other crude oil-based derivatives have highly customized terms and conditions and are not as widely available. Many of these over-the-counter contracts are cash-settled forwards for the future delivery of crude oil- or petroleum-based fuels that have terms similar to the Futures Contracts. Others take the form of "swaps" in which the two parties exchange cash flows based on pre-determined formulas tied to the crude oil spot price, forward crude oil price, the Benchmark Futures Contract price, or other crude oil futures contract price. Certain of these swaps may be cleared through clearinghouses and have margin and other requirements akin to those found in futures contracts. USBO may also enter into over-the-counter derivative contracts such as swaps or cash-settled forwards for the future delivery of crude oil- or petroleum-based fuels that are not cleared. For example, USBO may enter into over-the-counter derivative contracts whose value will be tied to changes in the difference between the crude oil spot price, the Benchmark Futures Contract price, or some other futures contract price traded on New York Mercantile Exchange or ICE Futures Exchange and the price of other Futures Contracts that may be invested in by USBO.

According to the Registration Statement, to protect itself from the credit risk that arises in connection with such over-the-counter Other Crude Oil-Related Investments, USBO will enter into agreements with each counterparty that provide for the netting of its overall exposure to its counterparty, such as the agreements published by the International Swaps and Derivatives Association, Inc. USBO will also require that the counterparty be highly rated and/or provide collateral or other credit support to address USBO's exposure to the counterparty. The creditworthiness of each potential counterparty will be

assessed by the General Partner, as described in the Registration Statement.

USBO's Units

According to the Registration Statement, the offering of USBO's Units is a best efforts offering. USBO will continuously offer Creation Baskets consisting of 100,000 Units through the Marketing Agent, to Authorized Purchasers. It is expected that on the effective date, the initial Authorized Purchaser will, subject to conditions, purchase one or more initial Creation Baskets of 100,000 Units at a price per unit equal to $50. It is expected that the proceeds from that purchase will be invested on that day and that USBO's initial per Unit net asset value will be established as of 4 p.m. Eastern time ("E.T.") that day. Authorized Purchasers will pay a $1,000 fee for each order to create one or more Creation Baskets or redeem one or more Redemption Baskets. The Marketing Agent will receive, for its services as marketing agent to USBO, a marketing fee of 0.06% on assets up to the first $3 billion and 0.04% on assets in excess of $3 billion, provided, however, that in no event may the aggregate compensation paid to the Marketing Agent and any affiliate of the General Partner for distribution-related services in connection with the offering of Units exceed ten percent (10%) of the gross proceeds of the offering.

The total deposit required to create each basket ("Creation Basket Deposit") will be an amount of Treasuries and/or cash that is in the same proportion to the total assets of USBO (net of estimated accrued but unpaid fees, expenses and other liabilities) on the date the order to purchase is accepted as the number of Units to be created under the purchase order is in proportion to the total number of Units outstanding on the date the order is received. The General Partner determines, directly in its sole discretion or in consultation with the Administrator, the requirements for Treasuries and the amount of cash, including the maximum permitted remaining maturity of a Treasury and proportions of Treasuries and cash that may be included in deposits to create baskets. The Marketing Agent will publish such requirements at the beginning of each business day. The amount of cash deposit required will be the difference between the aggregate market value of the Treasuries required to be included in a Creation Basket Deposit as of 4 p.m. E.T. on the date the order to purchase is properly received and the total required deposit.

Impact of Accountability Levels and Position Limits

According to the Registration Statement, the Benchmark Futures Contract is currently traded on the ICE Futures Exchange without specific accountability levels or position limits. However, the ICE Futures Exchange's daily position management regime requires that any position greater than 500 contracts in the nearest two months to expire must be reported to the ICE Futures Exchange on a daily basis. According to the Registration Statement, the ICE Futures Exchange has powers to prevent the development of excessive positions or unwarranted speculation or any other undesirable situation and may take any steps necessary to resolve such situations including the ability to mandate limitations on the size of such positions or to reduce positions where appropriate.

If USBO is required to limit or reduce the size of its positions in Brent crude oil contracts on the ICE Futures Exchange, it may then, if permitted under applicable regulatory requirements, purchase Futures Contracts on the NYMEX or other exchanges that trade listed crude oil futures. According to the Registration Statement, the Futures Contracts available on the NYMEX are comparable to the contracts on the ICE Futures Exchange, but they may have different underlying commodities, sizes, deliveries, and prices. The Futures Contracts available on the NYMEX are subject to accountability levels and position limits. In addition, USBO may invest in Other Crude Oil-Related Investments, as described above.

Calculation of NAV

USBO's NAV is calculated by (1) taking the current market value of its total assets, and (2) subtracting any liabilities. Brown Brothers Harriman & Co., the Administrator, will calculate the NAV of USBO once each New York Stock Exchange ("NYSE") trading day. The NAV for a particular trading day will be released after 4 p.m. E.T. Trading during the Core Trading Session on the NYSE Arca typically closes at 4 p.m. E.T. The Administrator will use the ICE Futures Exchange settlement price (a weighted average price of trades during a three minute settlement period from 2:27 p.m., E.T.) for the contracts traded on the ICE Futures Exchange, but will calculate or determine the value of all other USBO investments, as of the earlier of the close of the NYSE Arca or 4 p.m. E.T. in accordance with the Administrative Agency Agreement among Brown Brothers Harriman & Co., USBO and the General Partner.

In addition, Futures Contracts, Other Crude Oil-Related Investments and Treasuries held by USBO will be valued by the Administrator, using rates and points received from client-approved third party vendors (such as Reuters and WM Company) and advisor quotes. These investments will not be included in the Indicative Partnership Value ("IPV", as discussed below). The IPV is based on the prior day's NAV and moves up and down solely according to changes in the Benchmark Futures Contracts for Brent crude oil traded on the ICE Futures Exchange.

As discussed above, USBO will create and redeem Units only in blocks of 100,000 Units called Creation Baskets and Redemption Baskets, respectively. The price of each Unit offered in Creation Baskets on any day will be the total NAV of USBO calculated as of the close of the NYSE on that day divided by the number of issued and outstanding Units.

The creation and redemption of baskets will only be made in exchange for delivery to USBO or the distribution by USBO of the amount of Treasuries and any cash represented by the baskets being created or redeemed, the amount of which will be based on the combined NAV of the number of Units included in the baskets being created or redeemed as of 4 p.m. E.T. on the day the order to create or redeem baskets is properly accepted. Additional procedures relating to the creation and redemption of Units are described in the Registration Statement.

Dissemination and Availability of Information

Price of Futures Contracts. The applicable Futures Contracts are the underlying benchmark investment, commodity or asset, as applicable, for purposes of NYSE Arca Equities Rule 8.300(d)(2)(ii).[12]

The ICE Futures Exchange disseminates price information on the Futures Contracts traded on the ICE Futures Exchange on a real-time basis during normal trading hours on the ICE Futures Exchange from 8 p.m. E.T. to 6 p.m. E.T. With respect to any Futures Contracts that are traded on NYMEX, NYMEX disseminates price information

[12] NYSE Arca Equities Rule 8.300(d)(2)(ii) provides that NYSE Arca Equities will consider removing from listing Partnership Units if the value of the underlying benchmark investment, commodity or asset is no longer calculated or available on at a least a 15-second delayed basis or NYSE Arca Equities stops providing a hyperlink on its Web site to any such investment, commodity or asset value.

on a real-time basis during normal trading hours on NYMEX from 10 a.m. to 2:30 p.m., E.T.

Portfolio Disclosure. USBO's total portfolio composition will be disclosed each business day that the NYSE Arca is open for trading on USBO's Web site. The Web site disclosure of portfolio holdings will be made daily and will include, as applicable, the name and value of each Crude Oil Interest, the specific types of Other Crude Oil-Related Investments, Treasuries, and the amount of cash and cash equivalents held in USBO's portfolio. USBO's Web site is publicly accessible at no charge.

Indicative Partnership Value. In order to provide updated information relating to USBO for use by investors and market professionals, an updated IPV, as described below, will be calculated and disseminated by one or more major market data vendors during the NYSE Arca Core Trading Session. The IPV is based on the prior day's NAV and moves up and down solely according to changes in the Benchmark Futures Contracts for Brent crude oil traded on the ICE Futures Exchange.[13] The prices reported for the active Futures Contract month will be adjusted based on the prior day's spread differential between settlement values for that contract and the spot month contract. In the event that the spot month contract is also the active contract, the last sale price for the active contract will not be adjusted. The IPV disseminated during the Core Trading Session should not be viewed as an actual real time update of the NAV, because NAV is calculated only once at the end of each trading day.

The IPV will be disseminated on a per Unit basis every 15 seconds during the NYSE Arca Core Trading Session from 9:30 a.m. E.T. to 4 p.m. E.T. The normal trading hours of ICE Futures Exchange are 8 p.m. E.T. to 6 p.m. E.T.[14]

Dissemination of the IPV provides additional information that is not otherwise available to the public and is useful to investors and market professionals in connection with the trading of USBO Units on the NYSE Arca. Investors and market professionals will be able throughout the trading day to compare the market price of USBO and the IPV. If the market price of USBO Units diverges significantly from the IPV, market professionals will have an incentive to execute arbitrage trades. For example, if USBO appears to be trading at a discount compared to the IPV, a market professional could buy USBO Units on the NYSE Arca and sell short futures contracts. Such arbitrage trades can tighten the tracking between the market price of USBO and the IPV and thus can be beneficial to all market participants.

In addition, quotation and last-sale information regarding the Units will be disseminated through the facilities of the Consolidated Tape Association.

Trading Rules

The Exchange deems the Units to be equity securities, thus rendering trading in the Units subject to the Exchange's existing rules governing the trading of equity securities. The Units will trade on the NYSE Arca Marketplace from 4 a.m. to 8 p.m. E.T. The Exchange has appropriate rules to facilitate transactions in the Units during all trading sessions. The minimum trading increment for the Units on the Exchange will be $0.01.

NYSE Arca Equities Rule 8.300(e) sets forth certain restrictions on ETP Holders acting as registered Market Makers in Partnership Units to facilitate surveillance. NYSE Arca Equities Rule 8.300(e)(2)–(3) requires that the ETP Holder acting as a registered Market Maker in Partnership Units provide the Exchange with necessary information relating to its trading in the underlying asset or commodity, related futures or options on futures, or any other related derivatives. NYSE Arca Equities Rule 8.300(e)(4) prohibits the ETP Holder acting as a registered Market Maker in Partnership Units from using any material nonpublic information received from any person associated with an ETP Holder or employee of such person regarding trading by such person or employee in the underlying asset or commodity, related futures or options on futures or any other related derivative (including the Partnership Units). In addition, NYSE Arca Equities Rule 8.300(e)(1) provides that an ETP Holder acting as a registered Market Maker in the Units is obligated to comply with NYSE Arca Equities Rule 7.26 pertaining to limitations on dealings when such Market Maker, or affiliate of such Market Maker, engages in certain business activities, as described in such rules.

With respect to trading halts, the Exchange may consider all relevant factors in exercising its discretion to halt or suspend trading in the Units. Trading may be halted because of market conditions or for reasons that, in the view of the Exchange, make trading in the Units inadvisable. These may include: (1) The extent to which trading is not occurring in the underlying Futures Contracts, or (2) whether other unusual conditions or circumstances detrimental to the maintenance of a fair and orderly market are present. In addition, trading in the Units could be halted pursuant to the Exchange's "circuit breaker" rule.[15] Under Rule 7.34(a)(5), if the Exchange becomes aware that the NAV for the Units is not being disseminated to all market participants at the same time, it will halt trading in the Units on the Exchange until such time as the NAV is available to all market participants. In addition, if the portfolio composition applicable to the Units, as disseminated on the Web site for the Units, is not disseminated to all market participants at the same time, the Exchange will halt trading in the affected Units.

If the value of the IPV or the underlying benchmark investment, commodity or asset applicable to the Units is not being disseminated as required, the Exchange may halt trading in the Units during the day on which the interruption first occurs. If such interruption persists past the trading day in which it occurred, the Exchange will halt trading no later than the beginning of the trading day following the interruption.

Surveillance

The Exchange intends to utilize its existing surveillance procedures applicable to derivative products, including Partnership Units, to monitor trading in the Units. The Exchange represents that these procedures are adequate to properly monitor Exchange trading of the Units in all trading sessions and to deter and detect violations of Exchange rules and applicable federal securities laws.

The Exchange's current trading surveillances focus on detecting securities trading outside their normal patterns. When such situations are detected, surveillance analysis follows and investigations are opened, where appropriate, to review the behavior of all relevant parties for all relevant trading violations. The Exchange is able to obtain information regarding trading in the Units, the applicable physical commodities included in, or options, futures or options on futures on, or any other derivatives based on such commodities, through ETP Holders, in connection with such ETP Holders' proprietary or customer trades which they effect on any relevant market. With regard to the Futures Contracts, the Exchange can obtain market surveillance information, including customer identity information, with

[13] *See* e-mail from Tim Malinowski, Senior Director, NYSE Euronext LLC, to Edward Cho, Special Counsel, Commission, dated March 15, 2010.

[14] *Id.*

[15] *See* NYSE Arca Equities Rule 7.12.

respect to transactions occurring on ICE Futures Exchange pursuant to its comprehensive information sharing agreements with that exchange. NYMEX is a member of the Intermarket Surveillance Group ("ISG") and the Exchange therefore has access to all relevant trading information with respect to those contracts without any further action being required on the part of the Exchange. A list of ISG members is available at *http://www.isgportal.org.*[16]

In addition, to the extent that the Partnership invests in Futures Contracts traded on other exchanges, not more than 10% of the weight of the Partnership assets in the aggregate shall consist of Crude Oil Interests whose principal trading market is not a member of ISG or is a market with which the Exchange does not have a comprehensive surveillance sharing agreement.

The Exchange also has a general policy prohibiting the distribution of material, non-public information by its employees.

Information Bulletin

Prior to the commencement of trading, the Exchange will inform its ETP Holders in an Information Bulletin ("Bulletin") of the special characteristics and risks associated with trading the Units. Specifically, the Bulletin will discuss the following: (1) The risks involved in trading the Units during the Opening and Late Trading Sessions (for Futures Contracts traded on ICE Futures), or, in addition, part of the Core Trading Session (for Futures Contracts traded on NYMEX) when an updated IPV will not be calculated or publicly disseminated; (2) the procedures for purchases and redemptions of Units (and that Units are not individually redeemable); (3) NYSE Arca Equities Rule 9.2(a), which imposes a duty of due diligence on its ETP Holders to learn the essential facts relating to every customer prior to trading the Units; (4) how information regarding the IPV is disseminated; (5) the requirement that ETP Holders deliver a prospectus to investors purchasing newly issued Units prior to or concurrently with the confirmation of a transaction; and (6) trading information.

In addition, the Bulletin will reference that the Partnership is subject to various fees and expenses described in the Registration Statement.

The Bulletin will also reference the fact that there is no regulated source of last sale information regarding physical commodities, that the Commission has no jurisdiction over the trading of crude oil, heating oil, gasoline, natural gas or other petroleum-based fuels, and that the CFTC has regulatory jurisdiction over the trading of futures contracts traded on U.S. exchanges and related options.

The Bulletin will also discuss any exemptive, no-action and interpretive relief granted by the Commission from any rules under the Act.

The Bulletin will also disclose that the NAV for the Units will be calculated after 4 p.m. E.T. each trading day.

2. Statutory Basis

The proposed rule change is consistent with Section 6(b) of the Act,[17] in general, and furthers the objectives of Section 6(b)(5),[18] in particular, in that it is designed to prevent fraudulent and manipulative acts and practices, to promote just and equitable principles of trade, to foster cooperation and coordination with persons engaged in facilitating transactions in securities, and to remove impediments to and perfect the mechanism of a free and open market and a national market system. The Exchange believes that the proposed rule change will allow the listing of the Units on the Exchange, which the Exchange believes will benefit both investors and the marketplace. In addition, the listing and trading criteria set forth in Rule 8.300 are intended to protect investors and the public interest.

B. Self-Regulatory Organization's Statement on Burden on Competition

The Exchange does not believe that the proposed rule change will impose any burden on competition that is not necessary or appropriate in furtherance of the purposes of the Act.

C. Self-Regulatory Organization's Statement on Comments on the Proposed Rule Change Received From Members, Participants, or Others

No written comments were solicited or received with respect to the proposed rule change.

III. Date of Effectiveness of the Proposed Rule Change and Timing for Commission Action

Within 35 days of the date of publication of this notice in the **Federal Register** or within such longer period (i) as the Commission may designate up to 90 days of such date if it finds such longer period to be appropriate and publishes its reasons for so finding or (ii) as to which the self-regulatory organization consents, the Commission will:

(A) By order approve the proposed rule change, or

(B) Institute proceedings to determine whether the proposed rule change should be disapproved.

The Exchange has requested accelerated approval of this proposed rule change prior to the 30th day after the date of publication of notice in the **Federal Register.** The Commission is considering granting accelerated approval of the proposed rule change at the end of a 15-day comment period.

IV. Solicitation of Comments

Interested persons are invited to submit written data, views, and arguments concerning the foregoing, including whether the proposed rule change is consistent with the Act. Comments may be submitted by any of the following methods:

Electronic Comments

- Use the Commission's Internet comment form (*http://www.sec.gov/rules/sro.shtml*); or
- Send an e-mail to *rule-comments@sec.gov.* Please include File No. SR–NYSEArca–2010–14 on the subject line.

Paper Comments

- Send paper comments in triplicate to Elizabeth M. Murphy, Secretary, Securities and Exchange Commission, 100 F Street, NE., Washington, DC 20549–1090.

All submissions should refer to File No. SR–NYSEArca–2010–14. This file number should be included on the subject line if e-mail is used. To help the Commission process and review your comments more efficiently, please use only one method. The Commission will post all comments on the Commission's Internet Web site (*http://www.sec.gov/rules/sro.shtml*). Copies of the submission, all subsequent amendments, all written statements with respect to the proposed rule change that are filed with the Commission, and all written communications relating to the proposed rule change between the Commission and any person, other than those that may be withheld from the public in accordance with the provisions of 5 U.S.C. 552, will be available for Web site viewing and printing in the Commission's Public Reference Room, 100 F Street, NE., Washington, DC 20549, on official

[16] The Exchange notes that not all of the Crude Oil Interests held by the Fund may trade on exchanges that are members of ISG or with which the Exchange has in place a comprehensive surveillance sharing agreement.

[17] 15 U.S.C. 78f(b).

[18] 15 U.S.C. 78f(b)(5).

business days between the hours of 10 a.m. and 3 p.m. Copies of such filing also will be available for inspection and copying at the principal office of NYSE Arca. All comments received will be posted without change; the Commission does not edit personal identifying information from submissions. You should submit only information that you wish to make available publicly. All submissions should refer to File No. SR–NYSEArca–2010–14 and should be submitted on or before April 8, 2010.

For the Commission, by the Division of Trading and Markets, pursuant to delegated authority.[19]

Florence E. Harmon,

Deputy Secretary.

[FR Doc. 2010–6507 Filed 3–23–10; 8:45 am]

BILLING CODE 8011–01–P

DEPARTMENT OF TRANSPORTATION

Surface Transportation Board

[STB Finance Docket No. 35359]

Pacific Rim Railway Company, Inc.—Acquisition and Operation Exemption—City of Keokuk, IA

Pacific Rim Railway Company, Inc. (PRIM), a noncarrier, has filed a verified notice of exemption under 49 CFR 1150.31 to acquire from the City of Keokuk, IA and to operate approximately 2,894 feet of railroad trackage (.544-mile) consisting of a 2,194 foot-long railroad bridge over the Mississippi River, commonly known as the Keokuk Municipal Bridge, approximately 600 feet of land and track at the approach to the bridge at Hamilton, IL and approximately 100 feet of land and track at the approach to the bridge at Keokuk (collectively, the Bridge). The Bridge connects trackage at Keokuk with trackage at Hamilton.[1]

The transaction is expected to be consummated on or shortly after April 7, 2010 (the effective date of the exemption).

PRIM certifies that its projected annual revenues as a result of the transaction do not exceed those that would qualify it as a Class III rail carrier and further certifies that its projected annual revenue will not exceed $5 million.

If the verified notice contains false or misleading information, the exemption is void *ab initio.* Petitions to revoke the exemption under 49 U.S.C. 10502(d) may be filed at any time. The filing of a petition to revoke will not automatically stay the effectiveness of the exemption. Petitions for stay must be filed no later than March 31, 2010 (at least 7 days before the exemption becomes effective).

An original and 10 copies of all pleadings, referring to STB Finance Docket No. 35359, must be filed with the Surface Transportation Board, 395 E Street, SW., Washington, DC 20423–0001. In addition, a copy of each pleading must be served on Thomas F. McFarland, 208 South LaSalle Street, Suite 1890, Chicago, IL 60604.

Board decisions and notices are available on our Web site at *http://www.stb.dot.gov.*

Decided: March 18, 2010.

By the Board, Rachel D. Campbell, Director, Office of Proceedings.

Kulunie L. Cannon,

Clearance Clerk.

[FR Doc. 2010–6414 Filed 3–23–10; 8:45 am]

BILLING CODE 4915–01–P

DEPARTMENT OF TRANSPORTATION

Federal Aviation Administration

Research, Engineering And Development Advisory Committee

Pursuant to section 10(A)(2) of the Federal Advisory Committee Act (Pub. L. 92–463; 5 U.S.C. App. 2), notice is hereby given of a meeting of the FAA Research, Engineering and Development (R,E&D) Advisory Committee.

Agency: Federal Aviation Administration.

Action: Notice of Meeting.

Name: Research, Engineering & Development Advisory Committee.

Time and Date: April 21, 2010—9 a.m. to 5 p.m.

Place: Federal Aviation Administration, 800 Independence Avenue, SW–Round Room (10th Floor), Washington, DC 20591.

Purpose: The meeting agenda will include receiving from the Committee guidance for FAA' s research and development investments in the areas of air traffic services, airports, aircraft safety, human factors and environment and energy. Attendance is open to the interested public but seating is limited. Persons wishing to attend the meeting or obtain information should contact Gloria Dunderman at (202) 267–8937 or *gloria.dunderman@faa.gov.* Attendees will have to present picture ID at the security desk and be escorted to the Round Room.

Members of the public may present a written statement to the Committee at any time.

Dated: Issued in Washington, DC on March 17, 2010.

Barry Scott,

Director, Research & Technology Development.

[FR Doc. 2010–6254 Filed 3–23–10; 8:45 am]

BILLING CODE 4910–13–M

DEPARTMENT OF TRANSPORTATION

Pipeline and Hazardous Materials Safety Administration

[Docket No. PHMSA–2010–0078]

Pipeline Safety: Girth Weld Quality Issues Due to Improper Transitioning, Misalignment, and Welding Practices of Large Diameter Line Pipe

AGENCY: Pipeline and Hazardous Materials Safety Administration (PHMSA); DOT.

ACTION: Notice; issuance of advisory bulletin.

SUMMARY: PHMSA is issuing an advisory bulletin to notify owners and operators of recently constructed large diameter natural gas pipeline and hazardous liquid pipeline systems of the potential for girth weld failures due to welding quality issues. Misalignment during welding of large diameter line pipe may cause in-service leaks and ruptures at pressures well below 72 percent specified minimum yield strength (SMYS). PHMSA has reviewed several recent projects constructed in 2008 and 2009 with 20-inch or greater diameter, grade X70 and higher line pipe. Metallurgical testing results of failed girth welds in pipe wall thickness transitions have found pipe segments with line pipe weld misalignment, improper bevel and wall thickness transitions, and other improper welding practices that occurred during construction. A number of the failures were located in pipeline segments with concentrated external loading due to support and backfill issues. Owners and operators of recently constructed large diameter pipelines should evaluate these lines for potential girth weld failures due to misalignment and other issues by reviewing construction and operating records and conducting engineering reviews as necessary.

FOR FURTHER INFORMATION CONTACT: Alan Mayberry by phone at 202–366–5124 or by e-mail at *alan.mayberry@dot.gov.*

SUPPLEMENTARY INFORMATION:

[19] 17 CFR 200.30–3(a)(12).

[1] PRIM states that, because the Bridge is part of a through route for rail transportation, it is a "railroad line" under 49 U.S.C. 10901(a)(4). Rail transportation over the Bridge is currently being performed by Keokuk Junction Railway Company (KJRY), a Class III rail carrier. PRIM does not propose to operate over the Bridge, but acknowledges that, as owner of the Bridge, it would have a residual common carrier obligation to provide rail transportation in the event KJRY ceases to do so. PRIM seeks an exemption for operation on that basis.

I. Background

The Federal pipeline safety regulations in 49 CFR Parts 192 and 195 require operators of natural gas transmission, distribution, and hazardous liquids pipeline systems to construct their pipelines using pipe, fittings, and bends manufactured in accordance with 49 CFR §§ 192.7, 192.53, 192.55, 192.143, 192.144, 192.149, 195.3, 195.101, 195.112, and 195.118 and incorporated standards and listed design specifications. This involves reviewing the manufacturing procedure specification details for weld end conditions for the line pipe, fitting, bend, or other appurtenance from the manufacturer to ensure weld end conditions are acceptable for girth welding.

During the 2008 and 2009 pipeline construction periods, several newly constructed large diameter, 20-inch or greater, high strength (API 5L X70 and X80) natural gas and hazardous liquid pipelines experienced field hydrostatic test failures, in-service leaks, or in-service failures of line pipe girth welds. Post-incident metallurgical and mechanical tests and inspections of the line pipe, fittings, bends, and other appurtenances indicated pipe with weld misalignment, improper bevels of transitions, improper back welds, and improper support of the pipe and appurtenances. In some cases, pipe end conditions did not meet the design and construction requirements of the applicable standards including:

- American Petroleum Institute (API), *Specification for Line Pipe*—5L, (API 5L), 43rd (including Table 8—*Tolerance for Diameter at Pipe Ends* and Table 9—*Tolerances for Wall Thickness*) or 44th editions for the specified pipe grade;
- API 1104, 19th and 20th editions, *Welding of Pipelines and Related Facilities;*
- American Society of Mechanical Engineers (ASME) B31.8, *Gas Transmission and Distribution Piping Systems* or ASME B31.4 *Pipeline Transportation Systems for Liquid Hydrocarbons and Other Liquids;* and
- Manufacturers Standardization Society of the Valve and Fittings Industry, Inc. (MSS) MSS–SP–44–1996 *Steel Pipeline Flanges* and MSS MSS–SP–75–2004 *Specification for High-Test, Wrought, Butt-Welding Fittings.*

Post-incident findings were that in some cases the pipe and induction bend girth weld bevels were not properly transitioned and aligned during welding. In some cases, the girth weld pipe ends did not meet API 5L pipe end diameter and diameter out-of-roundness specifications. Many of the problematic girth welds did not meet API 1104 misalignment and allowable "high-low" criteria.

Some girth welds that failed in-service had non-destructive testing (NDT) quality control problems. NDT procedures, including radiographic film and radiation source selection, were not properly optimized for weld defect detection and repairs. This was particularly the case where there were large variations in wall thickness at transitions. In some situations, NDT procedures were not completed in accordance with established API 1104 and operator procedures.

Many of the integrity issues with transition girth welds were present on pipelines being constructed in hilly terrain and high stress concentration locations such as at crossings, streams, and sloping hillsides with unstable soils. These girth welds had high stress concentrations in the girth weld transitions due to the combination of large variations in wall thickness and improper internal bevels with inadequate pipe support, poor backfill practices and soil movement due to construction activities.

II. Advisory Bulletin ADB–10–03

To: Owners and Operators of Hazardous Liquid and Natural Gas Pipeline Systems.

Subject: Girth Weld Quality Issues Due to Improper Transitioning, Misalignment, and Welding Practices of Large Diameter Line Pipe.

Advisory: Owners and operators of recently constructed large diameter pipelines should evaluate these lines for potential girth weld failures due to misalignment and other issues by reviewing construction and operating records and conducting engineering reviews as necessary. The assessments should cover all large diameter, 20-inch or greater, high strength line pipe transitions and cut factory bends or induction bends installed during 2008 and 2009, and should include material specifications, field construction procedures, caliper tool results, deformation tool results, welding procedures including back welding, NDT records, and any failures or leaks during hydrostatic testing or in-service operations to identify systemic problems with pipe girth weld geometry/out-of-roundness, diameter tolerance, and wall thickness variations that may be defective.

The reviews should ensure that pipelines were constructed in compliance with the Federal pipeline safety regulations in 49 CFR Parts 192 and 195. Operators of natural gas transmission, distribution, and hazardous liquids pipeline systems are required to use pipe and fittings manufactured in accordance with 49 CFR §§ 192.7, 192.53, 192.55, 192.143, 192.144, 192.149, 195.3, 195.101, 195.112, and 195.118 and incorporated standards and listed design specifications.

With respect to the construction process, pipe, fittings, factory bends, and induction bends must be made in accordance with the applicable standards to ensure that weld end dimension tolerances are met for the pipe end diameter and diameter out-of-roundness. API 1104 specifies girth weld misalignment and allowable "high-low" criteria. API 1104—19th edition, § 7.2, *Alignment,* specifies for pipe ends of the same nominal thickness that the offset should not exceed ⅛ inch (3mm) and when there is greater misalignment, it shall be uniformly distributed around the circumference of the pipe, fitting, bend, and other appurtenance. ASME B31.4, Figure 434.8.6(a)–(2), *Acceptable Butt Welded Joint Design for Unequal Wall Thickness* and ASME B31.8, Figure I5, *Acceptable Design for Unequal Wall Thickness,* give guidance for wall thickness variations and weld bevels designs for transitions. API 5L, 43rd edition in Table 8—*Tolerance for Diameter at Pipe Ends* and Table 9—*Tolerances for Wall Thickness,* specifies tolerances for pipe wall thickness and pipe end conditions for diameter and diameter out-of-roundness. MSS–SP–44–1996 specifies weld end tolerances in § 5.3—*Hub Design,* § 5.4—*Welding End,* Figure 1—*Acceptable Designs for Unequal Wall Thickness,* and Figures 2 and 3; and MSS–75–2004 specifies weld end tolerances in § 13.3 and Figures 1, 2, and 3 and Table 3—Tolerances.

Pipeline owners and operators should closely review the manufacturing procedure specifications for the production, rolling, and bending of the steel pipe, fittings, bends, and other appurtenances to make sure that pipe end conditions (diameter and out of roundness tolerances) and transition bevels are suitable for girth welding. Pipeline owners and operators should request or specify manufacturing procedure specification details for weld end conditions for the line pipe, fitting, bend, or other appurtenance from the manufacturer to ensure weld end conditions are acceptable for girth welding.

To ensure the integrity of the pipeline, field personnel that weld line pipe, fittings, bends, and other appurtenances must be qualified, follow qualified procedures, and operators must document the work performed. Operators should verify that field

practices are conforming to API 5L, API 1104, ASME B31.4 or ASME B31.8 and operator procedures for weld bevel, pipe alignment, back welding, and transitions. If any bends are cut, the operator must have procedures to ensure that the pipe or bend cut ends are acceptable for welding in accordance with the listed specifications. Procedures, inspection, and documentation must be in place to ensure that when pipe, fittings, bends, and other appurtenances are welded, the field girth welds are made and non-destructively tested in accordance with 49 CFR §§ 192.241, 192.243, 192.245, 195.228, 195.230, and 195.234. NDT procedures including film type and radiation source selection should be optimized for weld defect detection and repairs completed in accordance with established welding procedures. When there is a variation in wall thickness between line pipe and a segmented fitting, bend, or other appurtenance, consideration should be given to the installation of a segment of intermediate wall thickness pipe. Additionally, efforts should be taken to ensure pipe girth weld alignment is optimized by utilizing experienced and trained welders, suitable pipe and detailed procedures.

Each material component of a pipeline such as line pipe, fittings, bends, and other appurtenances must be able to withstand operating pressures and other anticipated external loadings without impairment of its serviceability in accordance with 49 CFR §§ 192.143 and 195.110. In order to ensure pipeline integrity, the operator must take all practicable steps to protect each transmission line from abnormal loads while backfilling and other work continues along the right-of-way and to minimize loads in accordance with 49 CFR §§ 192.317, 192.319, 195.246(a), and 195.252. Operators should give special attention to girth welds with variations in wall thickness when located in pipeline segments where significant pipe support and backfill settlement issues after installation may be present, specifically in hilly terrain and high stress concentration locations such as at crossings, streams, and sloping hill sides with unstable soils.

Even if no girth weld concerns are identified by reviewing construction records, if an operator has any knowledge, findings or operating history that leads it to believe that its newly constructed, high material grade, large diameter, line pipe segments contain these type girth weld transitions, the operator should conduct engineering reviews as described above with those operating pipelines to ensure that material, engineering design, and field construction procedures were in compliance with 49 CFR Parts 192 and 195. Failure to conduct engineering reviews and to remediate findings may compromise the safe operation of the pipeline.

Authority: 49 U.S.C. chapter 601 and 49 CFR 1.53.

Issued in Washington, DC, on March 18, 2010.

Jeffrey D. Wiese,

Associate Administrator for Pipeline Safety.

[FR Doc. 2010–6528 Filed 3–23–10; 8:45 am]

BILLING CODE 4910–60–P

DEPARTMENT OF TRANSPORTATION

Maritime Administration

Voluntary Intermodal Sealift Agreement

AGENCY: Maritime Administration, DOT.

ACTION: Notice of Voluntary Intermodal Sealift Agreement (VISA).

SUMMARY: The Maritime Administration (MARAD) announces the extension of the Voluntary Intermodal Sealift Agreement (VISA) until October 1, 2011, pursuant to the Defense Production Act of 1950, as amended. The purpose of the VISA is to make intermodal shipping services/systems, including ships, ships' space, intermodal equipment and related management services, available to the Department of Defense as required to support the emergency deployment and sustainment of U.S. military forces. This is to be accomplished through cooperation among the maritime industry, the Department of Transportation and the Department of Defense.

FOR FURTHER INFORMATION CONTACT: Jerome D. Davis, Director, Office of Sealift Support, Room W25–310, Maritime Administration, 1200 New Jersey Avenue, SE., Washington, DC 20590, (202) 366–2323, Fax (202) 366–5904.

SUPPLEMENTARY INFORMATION: Section 708 of the Defense Production Act of 1950, as amended, (50 U.S.C. App. 2158), as implemented by regulations of the Federal Emergency Management Agency (44 CFR Part 332), "Voluntary agreements for preparedness programs and expansion of production capacity and supply", authorizes the President, upon a finding that conditions exist which may pose a direct threat to the national defense or its preparedness programs, "* * * to consult with representatives of industry, business, financing, agriculture, labor and other interests * * *" in order to provide the making of such voluntary agreements. It further authorizes the President to delegate that authority to individuals who are appointed by and with the advice and consent of the Senate, upon the condition that such individuals obtain the prior approval of the Attorney General after the Attorney General's consultation with the Federal Trade Commission. Section 501 of Executive Order 12919, as amended, delegated this authority of the President to the Secretary of Transportation (Secretary), among others. By DOT Order 1900.9, the Secretary delegated to the Maritime Administrator the authority under which the VISA is sponsored. Through advance arrangements in joint planning, it is intended that participants in VISA will provide capacity to support a significant portion of surge and sustainment requirements in the deployment of U.S. military forces during war or other national emergency.

The text of the VISA was first published in the **Federal Register** on February 13, 1997, to be effective for a two-year term until February 13, 1999. The VISA document has been extended and subsequently published in the **Federal Register** every two years. The last extension was published on November 7, 2007. The text published herein will now be implemented. Copies will be made available to the public upon request.

Text of the Voluntary Intermodal Sealift Agreement:

Voluntary Intermodal Sealift Agreement (VISA)

Table of Contents

Abbreviations
Definitions
Preface
I. Purpose
II. Authorities
  A. MARAD
  B. USTRANSCOM
III. General
  A. Concept
  B. Responsibilities
  C. Termination of Charter, Leases and Other Contractual Arrangements
  D. Modification/Amendment of This Agreement
  E. Administrative Expenses
  F. Record Keeping
  G. MARAD Reporting Requirements
IV. Joint Planning Advisory Group
V. Activation of VISA Contingency Provisions
  A. General
  B. Notification of Activation
  C. Voluntary Capacity
  D. Stage I
  E. Stage II
  F. Stage III
  G. Partial Activation
VI. Terms and Conditions

A. Participation
B. Agreement of Participant
C. Effective Date and Duration of Participation
D. Participant Termination of VISA
E. Rules and Regulations
F. Carrier Coordination Agreements
G. Enrollment of Capacity (Ships and Equipment)
H. War Risk Insurance
I. Antitrust Defense
J. Breach of Contract Defense
K. Vessel Sharing Agreements
VII. Application and Agreement
Figure 1—VISA Activation Process Diagram

Abbreviations

"AMC"—Air Mobility Command
"CCA"—Carrier Coordination Agreements
"CFR"—Code of Federal Regulations
"CONOPS"—Concept of Operations
"DoD"—Department of Defense
"DOJ"—Department of Justice
"DOT"—Department of Transportation
"DPA"—Defense Production Act
"EUSC"—Effective United States Control
"FAR"—Federal Acquisition Regulations
"FEMA"—Federal Emergency Management Agency. FEMA is an element of the Emergency Preparedness and Response Directorate, Department of Homeland Security.
"FTC"—Federal Trade Commission
"JCS"—Joint Chiefs of Staff
"JPAG"—Joint Planning Advisory Group
"MARAD"—Maritime Administration, DOT
"MSP"—Maritime Security Program
"MSC"—Military Sealift Command
"NCA"—National Command Authorities
"NDRF"—National Defense Reserve Fleet maintained by MARAD
"RRF"—Ready Reserve Force component of the NDRF
"SecDef"—Secretary of Defense
"SecTrans"—Secretary of Transportation
"SDDC"—Military Surface Deployment and Distribution Command
"Commander"—Commander, United States Transportation Command
"USTRANSCOM"—United States Transportation Command (including its components, Air Mobility Command, Military Sealift Command and Military Surface Deployment and Distribution Command)
"VISA"—Voluntary Intermodal Sealift Agreement
"VSA"—Vessel Sharing Agreement

Definitions—For purposes of this agreement, the following definitions apply:

Administrator—Maritime Administrator.

Agreement—Agreement (proper noun) refers to the Voluntary Intermodal Sealift Agreement (VISA).

Attorney General—Attorney General of the United States.

Broker—A person who arranges for transportation of cargo for a fee.

Carrier Coordination Agreement (CCA)—An agreement between two or more Participants or between Participant and non-Participant carriers to coordinate their services in a Contingency, including agreements to: (i) Charter vessels or portions of the cargo-carrying capacity of vessels; (ii) share cargo handling equipment, chassis, containers and ancillary transportation equipment; (iii) share wharves, warehouse, marshaling yards and other marine terminal facilities; and (iv) coordinate the movement of vessels.

Chairman—FTC—Chairman of the Federal Trade Commission (FTC).

Charter—Any agreement or commitment by which the possession or services of a vessel are secured for a period of time, or for one or more voyages, whether or not a demise of the vessel.

Commercial—Transportation service provided for profit by privately owned (not government owned) vessels to a private or government shipper. The type of service may be either common carrier or contract carriage.

Contingency—Includes, but is not limited to a "contingency operation" as defined at 10 U.S.C. 101(a)(13), and a JCS-directed, NCA-approved action undertaken with military forces in response to: (i) Natural disasters; (ii) terrorists or subversive activities; or (iii) required military operations, whether or not there is a declaration of war or national emergency.

Contingency contracts—DoD contracts in which Participants implement advance commitments of capacity and services to be provided in the event of a Contingency.

Contract carrier—A for-hire carrier who does not hold out regular service to the general public, but instead contracts, for agreed compensation, with a particular shipper for the carriage of cargo in all or a particular part of a ship for a specified period of time or on a specified voyage or voyages.

Controlling interest—More than a 50-percent interest by stock ownership.

Director—FEMA—Director of Federal Emergency Management Agency (FEMA). The Director—FEMA is also Under Secretary for Emergency Preparedness and Response, Department of Homeland Security.

Effective U.S. Control (EUSC)—U.S. citizen-owned ships which are registered in certain open registry countries and which the United States can rely upon for defense in national security emergencies. The term has no legal or other formal significance. U.S. citizen-owned ships registered in Liberia, Panama, Honduras, the Bahamas and the Republic of the Marshall Islands are considered under effective U.S. control because these do not have any laws that prohibit U.S. requisition. EUSC registries are recognized by the Maritime Administration after consultation with DoD. (MARAD OPLAN 001A, 17 July 1990)

Enrollment Contract—The document, executed and signed by MSC, and the individual carrier enrolling that carrier into VISA Stage III.

Foreign flag vessel—A vessel registered or documented under the law of a country other than the United States of America.

Intermodal equipment—Containers (including specialized equipment), chassis, trailers, tractors, cranes and other materiel handling equipment, as well as other ancillary items.

Liner—Type of service offered on a definite, advertised schedule and giving relatively frequent sailings at regular intervals between specific ports or ranges.

Liner throughput capacity—The system/intermodal capacity available and committed, used or unused, depending on the system cycle time necessary to move the designated capacity through to destination. Liner throughput capacity shall be calculated as: static capacity (outbound from CONUS) X voyage frequency X.5.

Management services—Management expertise and experience, intermodal terminal management, information resources, and control and tracking systems.

Ocean common carrier—An entity holding itself out to the general public to provide transportation by water of passengers or cargo for compensation; which assumes responsibility for transportation from port or point of receipt to port or point of destination; and which operates and utilizes a vessel operating on the high seas for all or part of that transportation. (As defined in 46 App. U.S.C. 1702 and 801 regarding international and interstate commerce respectively).

Operator—An ocean common carrier or contract carrier that owns or controls or manages vessels by which ocean transportation is provided.

Organic sealift—For the purposes of this agreement ships considered to be under government control or long-term charter—Fast Sealift Ships, Ready Reserve Force and commercial ships under long-term charter to DoD.

Participant—A signatory party to VISA, and otherwise as defined within Section VI of this document.

Person—Includes individuals and corporations, partnerships, and associations existing under or authorized by the laws of the United States or any state, territory, district, or possession thereof, or of a foreign country.

Service contract—A contract between a shipper (or a shipper's association) and an ocean common carrier (or conference) in which the shipper makes a commitment to provide a certain minimum quantity of cargo or freight revenue over a fixed time period, and the ocean common carrier or conference commits to a certain rate or rate schedule, as well as a defined service level (such as assured space, transit time, port rotation, or similar service features), as defined in the Shipping Act of 1984. The contract may also specify provisions in the event of nonperformance on the part of either party.

Standby period—The interval between the effective date of a Participant's acceptance into the Agreement and the activation of any stage, and the periods between deactivation of all stages and any later activation of any stage.

U.S.-flag Vessel—A vessel registered or documented under the laws of the

United States of America.

Vessel Sharing Agreement (VSA) Capacity—Space chartered to a Participant for carriage of cargo, under its commercial contracts, service contracts or in common carriage, aboard vessels shared with another carrier or carriers pursuant to a commercial vessel sharing agreement under which the carriers may compete with each other for the carriage of cargo. In U.S. foreign trades the agreement is filed with the Federal Maritime Commission (FMC) in conformity with the Shipping Act of 1984 and implementing regulations.

Volunteers—Any vessel owner/operator who is an ocean carrier and who offers to make capacity, resources or systems available to support contingency requirements.

Preface

The Administrator, pursuant to the authority contained in Section 708 of the Defense Production Act of 1950, as amended (50 App. U.S.C. 2158) (Section 708)(DPA), in cooperation with DoD, has developed this Agreement [hereafter called the Voluntary Intermodal Sealift Agreement (VISA)] to provide DoD the commercial sealift and intermodal shipping services/systems necessary to meet national defense Contingency requirements.

USTRANSCOM procures commercial shipping capacity to meet requirements for ships and intermodal shipping services/systems through arrangements with common carriers, with contract carriers and by charter. DoD (through USTRANSCOM) and DOT (through MARAD) maintain and operate a fleet of ships owned by or under charter to the Federal Government to meet the logistic needs of the military services which cannot be met by existing commercial service. Government controlled ships are selectively activated for peacetime military tests and exercises, and to satisfy military operational requirements which cannot be met by commercial shipping in time of war, national emergency, or military contingency. Foreign-flag shipping is used in accordance with applicable laws, regulations and policies.

The objective of VISA is to provide DoD a coordinated, seamless transition from peacetime to wartime for the acquisition of commercial sealift and intermodal capability to augment DoD's organic sealift capabilities. This Agreement establishes the terms, conditions and general procedures by which persons or parties may become VISA Participants. Through advance joint planning among USTRANSCOM, MARAD and the Participants, Participants may provide predetermined capacity in designated stages to support DoD Contingency requirements.

VISA is designed to create close working relationships among MARAD, USTRANSCOM and Participants through which Contingency needs and the needs of the civil economy can be met by cooperative action. During Contingencies, Participants are afforded maximum flexibility to adjust commercial operations by Carrier Coordination Agreements (CCA), in accordance with applicable law.

Participants will be afforded the first opportunity to meet DoD peacetime and Contingency sealift requirements within applicable law and regulations, to the extent that operational requirements are met. In the event VISA Participants are unable to fully meet Contingency requirements, the shipping capacity made available under VISA may be supplemented by ships/capacity from non-Participants in accordance with applicable law and by ships requisitioned under 46 U.S.C. 56301. In addition, containers and chassis made available under VISA may be supplemented by services and equipment acquired by USTRANSCOM or accessed by the Administrator through the provisions of 46 CFR Part 340.

The SecDef has approved VISA as a sealift readiness program for the purpose of Section 909 of the Merchant Marine Act, 1936, as amended (46 App. U.S.C. 1248) and (46 U.S.C. 53107).

Voluntary Intermodal Sealift Agreement

I. Purpose

A. The Administrator has made a determination, in accordance with Section 708(c)(1) of the Defense Production Act (DPA) of 1950, that conditions exist which may pose a direct threat to the national defense of the United States or its preparedness programs and, under the provisions of Section 708, has certified to the Attorney General that a standby agreement for utilization of intermodal shipping services/systems is necessary for the national defense. The Attorney General, in consultation with the Chairman of the Federal Trade Commission, has issued a finding that dry cargo shipping capacity to meet national defense requirements cannot be provided by the industry through a voluntary agreement having less anticompetitive effects or without a voluntary agreement.

B. The purpose of VISA is to provide a responsive transition from peace to Contingency operations through pre-coordinated agreements for sealift capacity to support DoD Contingency requirements. VISA establishes procedures for the commitment of intermodal shipping services/systems to satisfy such requirements. VISA will change from standby to active status upon activation by appropriate authority of any of the Stages, as described in Section V.

C. It is intended that VISA promote and facilitate DoD's use of existing commercial transportation resources and integrated intermodal transportation systems, in a manner which minimizes disruption to commercial operations, whenever possible.

D. Participants' capacity which may be committed pursuant to this Agreement may include all intermodal shipping services/systems and all ship types, including container, partial container, container/bulk, container/roll-on/roll-off, roll-on/roll-off (of all varieties), breakbulk ships, tug and barge combinations, and barge carrier (LASH, SeaBee).

II. Authorities

A. MARAD

1. Sections 101 and 708 of the DPA, as amended (50 App. U.S.C. 2158); Executive Order 12919 as amended, 59 FR 29525, June 7, 1994; Executive Order 12148, as amended, 3 CFR 1979 Comp., p. 412, as amended; 44 CFR Part 332; DOT Order 1900.9; 46 CFR Part 340.

2. Section 501 of Executive Order 12919, as amended, delegated the authority of the President under Section 708 to SecTrans, among others. By DOT Order 1900.9, SecTrans delegated to the Administrator the authority under which VISA is sponsored.

B. USTRANSCOM

1. Section 113 and Chapter 6 of Title 10 of the United States Code.

2. DoD Directive 5158.4 designating the Commander to provide common user air, land, and sea transportation for DoD.

III. General

A. Concept

1. VISA provides for the staged, time-phased availability of Participants' shipping services/systems to meet NCA-directed DoD Contingency requirements in the most demanding defense oriented sealift emergencies and for less demanding defense oriented situations through prenegotiated Contingency contracts between the government and Participants (*see* Figure 1). Such arrangements will be jointly planned with MARAD, USTRANSCOM, and Participants in peacetime to allow effective, and efficient and best valued use of commercial sealift capacity, provide DoD assured Contingency access, and minimize commercial disruption, whenever possible.

a. Stages I and II provide for prenegotiated contracts between DoD and Participants to provide sealift capacity against all projected DoD Contingency requirements. These agreements will be executed in accordance with approved DoD contracting methodologies.

b. Stage III will provide for additional capacity to DoD when Stages I and II commitments or volunteered capacity are insufficient to meet Contingency requirements, and adequate shipping services from non-Participants are not available through established DoD

contracting practices or U.S. Government treaty agreements.

2. Activation will be in accordance with procedures outlined in Section V of this Agreement.

3. Following is the prioritized order for utilization of commercial sealift capacity to meet DoD peacetime and Contingency requirements:

a. U.S.-flag vessel capacity operated by a Participant and U.S.-flag Vessel Sharing Agreement (VSA) capacity of a Participant.

b. U.S.-flag vessel capacity operated by a non-Participant.

c. Combination U.S./foreign flag vessel capacity operated by a Participant and combination U.S./foreign flag VSA capacity of a Participant.

d. Combination U.S./foreign flag vessel capacity operated by a non-Participant.

e. U.S. owned or operated foreign flag vessel capacity and VSA capacity of a Participant.

f. U.S. owned or operated foreign flag vessel capacity and VSA capacity of a non-Participant.

g. Foreign-owned or operated foreign flag vessel capacity of a non-Participant.

4. Under Section VI.F. of this Agreement, Participants may implement CCAs to fulfill their contractual commitments to meet VISA requirements.

B. Responsibilities

1. The SecDef, through USTRANSCOM, shall:

a. Define time-phased requirements for Contingency sealift capacity and resources required in Stages I, II and III to augment DoD sealift resources.

b. Keep MARAD and Participants apprised of Contingency sealift capacity required and resources committed to Stages I and II.

c. Obtain Contingency sealift capacity through the implementation of specific prenegotiated DoD Contingency contracts with Participants.

d. Notify the Administrator upon activation of any stage of VISA.

e. Co-chair (with MARAD) the Joint Planning Advisory Group (JPAG).

f. Establish procedures, in accordance with applicable law and regulation, providing Participants with necessary determinations for use of foreign flag vessels to replace an equivalent U.S.-flag capacity to transport a Participant's normal peacetime DoD cargo, when Participant's U.S.-flag assets are removed from regular service to meet VISA Contingency requirements.

g. Provide a reasonable time to permit an orderly return of a Participant's vessel(s) to its regular schedule and termination of its foreign flag capacity arrangements as determined through coordination between DoD and the Participants.

h. Review and endorse Participants' requests to MARAD for use of foreign flag replacement capacity for non-DoD government cargo, when U.S.-flag capacity is required to meet Contingency requirements.

2. The SecTrans, through MARAD, shall:

a. Review the amount of sealift resources committed in DoD contracts to Stages I and II and notify USTRANSCOM if a particular level of VISA commitment will have serious adverse impact on the commercial sealift industry's ability to provide essential services. MARAD's analysis shall be based on the consideration that all VISA Stage I and II capacity committed will be activated. This notification will occur on an as required basis upon the Commander's acceptance of VISA commitments from the Participants. If so advised by MARAD, USTRANSCOM will adjust the size of the stages or provide MARAD with justification for maintaining the size of those stages. USTRANSCOM and MARAD will coordinate to ensure that the amount of sealift assets committed to Stages I and II will not have an adverse, national economic impact.

b. Coordinate with DOJ for the expedited approval of CCAs.

c. Upon request by the Commander and approval by SecDef to activate Stage III, allocate sealift capacity and intermodal assets to meet DoD Contingency requirements. DoD shall have priority consideration in any allocation situation.

d. Establish procedures, pursuant to 46 U.S.C., 53107(f), for determinations regarding the equivalency and duration of the use of foreign flag vessels to replace U.S.-flag vessel capacity to transport the cargo of a Participant which has entered into an operating agreement under 46 U.S.C. 53103 whose U.S.-flag vessel capacity has been removed from regular service to meet VISA contingency requirements. Such foreign flag vessels shall be eligible to transport cargo that is subject to the Cargo Preference Act of 1904 (10 U.S.C. 2631), P.R. 17 (46 U.S.C. 55304) Public Law 664 (46 U.S.C. 55305 and 55314) and 46 U.S.C. 55302(a). However, any procedures regarding the use of such foreign flag vessels to transport cargo subject to the Cargo Preference Act of 1904 must have the concurrence of USTRANSCOM before it becomes effective.

e. Co-chair (with USTRANSCOM) the JPAG.

f. Seek necessary Jones Act waivers as required. To the extent feasible, participants with Jones Act vessels or vessel capacity will use CCAs or other arrangements to protect their ability to maintain services for their commercial customers and to fulfill their commercial peacetime commitments with U.S.-flag vessels. In situations where the activation of this Agreement deprives a Participant of all or a portion of its Jones Act vessels or vessel capacity and, at the same time, creates a general shortage of Jones Act vessel(s) or vessel capacity on the market, the Administrator may request that the Secretary of Homeland Security grant a temporary waiver of the provisions of the Jones Act to permit a Participant to charter or otherwise utilize non-Jones Act vessel(s) or vessel capacity, with priority consideration recommended for U.S. crewed vessel(s) or vessel capacity. The vessel(s) or vessel capacity for which such waivers are requested will be approximately equal to the Jones Act vessel(s) or vessel capacity chartered or under contract to DoD, and any waiver that may be granted will be effective for the period that the Jones Act vessel(s) or vessel capacity is on charter or under contract to DoD plus a reasonable time for termination of the replacement charters as determined by the Administrator.

C. Termination of Charters, Leases and Other Contractual Arrangements

1. USTRANSCOM will notify the Administrator as soon as possible of the prospective termination of charters, leases, management service contracts or other contractual arrangements made by DoD under this Agreement.

2. In the event of general requisitioning of ships under 46 U.S.C. 56301, the Administrator shall consider commitments made with DoD under this Agreement.

D. Modification/Amendment of This Agreement

1. The Attorney General may modify this Agreement, in writing, after consultation with the Chairman-FTC, SecTrans, through his representative MARAD, and SecDef, through his representative the Commander. Although Participants may withdraw from this Agreement pursuant to Section VI.D, they remain subject to VISA as amended or modified until such withdrawal.

2. The Administrator, Commander and Participants may modify this Agreement at any time by mutual agreement, but only in writing with the approval of the Attorney General and the Chairman-FTC.

3. Participants may propose amendments to this Agreement at any time.

E. Administrative Expenses—Administrative and Out-of-pocket Expenses Incurred by a Participant Shall Be Borne Solely by the Participant

F. Recordkeeping

1. MARAD has primary responsibility for maintaining carrier VISA application records in connection with this Agreement. Records will be maintained in accordance with MARAD Regulations. Once a carrier is selected as a VISA Participant, a copy of the VISA application form will be forwarded to USTRANSCOM.

2. In accordance with 44 CFR 332.2(c), MARAD is responsible for the making and record maintenance of a full and verbatim transcript of each JPAG meeting. MARAD shall send this transcript, and any voluntary agreement resulting from the meeting, to the Attorney General, the Chairman-FTC, the Director-FEMA, any other party or repository required by law and to Participants upon their request.

3. USTRANSCOM shall be the official custodian of records related to the contracts to be used under this Agreement, to include specific information on enrollment of a Participant's capacity in VISA.

4. In accordance with 44 CFR 332.3(d), a Participant shall maintain for five (5) years all minutes of meetings, transcripts, records, documents and other data, including any communications with other Participants or with any other member of the industry or their representatives, related to the administration, including planning related to and implementation of Stage activations of this Agreement. Each Participant agrees to make such records available to the Administrator, the Commander, the Attorney General, and the Chairman-FTC for inspection and copying at reasonable times and upon reasonable notice. Any record maintained by MARAD or USTRANSCOM pursuant to paragraphs 1, 2, or 3 of this subsection shall be available for public inspection and copying unless exempted on the grounds specified in 5 U.S.C 552(b) or identified as privileged and confidential information in accordance with Section 708(e).

G. MARAD Reporting Requirements—MARAD Shall Report to the Director-FEMA, as Required, on the Status and Use of This Agreement.

IV. Joint Planning Advisory Group

A. The JPAG provides USTRANSCOM, MARAD and VISA Participants a planning forum to:

1. Analyze DoD Contingency sealift/intermodal service and resource requirements.

2. Identify commercial sealift capacity that may be used to meet DoD requirements, related to Contingencies and, as requested by USTRANSCOM, exercises and special movements.

3. Develop and recommend CONOPS to meet DoD-approved Contingency requirements and, as requested by USTRANSCOM, exercises and special movements.

B. The JPAG will be co-chaired by MARAD and USTRANSCOM, and will convene as jointly determined by the co-chairs.

C. The JPAG will consist of designated representatives from MARAD, USTRANSCOM, each Participant, and maritime labor. Other attendees may be invited at the discretion of the co-chairs as necessary to meet JPAG requirements. Representatives will provide technical advice and support to ensure maximum coordination, efficiency and effectiveness in the use of Participants' resources. All Participants will be invited to all open JPAG meetings. For selected JPAG meetings, attendance may be limited to designated Participants to meet specific operational requirements.

1. The co-chairs may establish working groups within JPAG. Participants may be assigned to working groups as necessary to develop specific CONOPS.

2. Each working group will be co-chaired by representatives designated by MARAD and USTRANSCOM.

D. The JPAG will not be used for contract negotiations and/or contract discussions between carriers and DoD; such negotiations and/or discussions will be in accordance with applicable DoD contracting policies and procedures.

E. The JPAG co-chairs shall:

1. Notify the Attorney General, the Chairman-FTC, Participants and the maritime labor representative of the time, place and nature of each JPAG meeting.

2. Provide for publication in the **Federal Register** of a notice of the time, place and nature of each JPAG meeting. If the meeting is open, a **Federal Register** notice will be published reasonably in advance of the meeting. If a meeting is closed, a **Federal Register** notice will be published within ten (10) days after the meeting and will include the reasons for closing the meeting.

3. Establish the agenda for each JPAG meeting and be responsible for adherence to the agenda.

4. Provide for a full and complete transcript or other record of each meeting and provide one copy each of transcript or other record to the Attorney General, the Chairman-FTC, and to Participants, upon request.

F. Security Measures—The co-chairs will develop and coordinate appropriate security measures so that Contingency planning information can be shared with Participants to enable them to plan their commitments.

V. Activation of VISA Contingency Provisions

A. General

VISA may be activated at the request of the Commander, with approval of SecDef, as needed to support Contingency operations. Activating voluntary commitments of capacity to support such operations will be in accordance with prenegotiated Contingency contracts between DoD and Participants.

B. Notification of Activation

1. The Commander will notify the Administrator of the activation of Stages I, II, and III.

2. The Administrator shall notify the Attorney General and the Chairman-FTC when it has been determined by DoD that activation of any Stage of VISA is necessary to meet DoD Contingency requirements.

C. Voluntary Capacity

1. Throughout the activation of any Stages of this Agreement, DoD may utilize voluntary commitment of sealift capacity or systems.

2. Requests for volunteer capacity will be extended simultaneously to both Participants and other carriers. First priority for utilization will be given to Participants who have signed Stage I and/or II contracts and are capable of meeting the operational requirements. Participants providing voluntary capacity may request USTRANSCOM to activate their prenegotiated Contingency contracts; to the maximum extent possible, USTRANSCOM, where appropriate, shall support such requests. Volunteered capacity will be credited against Participants' staged commitments, in the event such stages are subsequently activated.

3. In the event Participants are unable to fully meet Contingency requirements,

or do not voluntarily offer to provide the required capacity, the shipping capacity made available under VISA may be supplemented by ships/capacity from non-Participants.

4. When voluntary capacity does not meet DoD Contingency requirements, DoD will activate the VISA stages as necessary.

D. Stage I

1. Stage I will be activated in whole or in part by the Commander, with approval of SecDef, when voluntary capacity commitments are insufficient to meet DoD Contingency requirements. The Commander will notify the Administrator upon activation.

2. USTRANSCOM will implement Stage I Contingency contracts as needed to meet operational requirements.

E. Stage II

1. Stage II will be activated, in whole or in part, when Contingency requirements exceed the capability of Stage I and/or voluntarily committed resources.

2. Stage II will be activated by the Commander, with approval of SecDef, following the same procedures discussed in paragraph D above.

F. Stage III

1. Stage III will be activated, in whole or in part, when Contingency requirements exceed the capability of Stages I and II, and other shipping services are not available. This stage involves DoD use of capacity and vessels operated by Participants which will be furnished to DoD when required in accordance with this Agreement. The capacity and vessels are allocated by MARAD on behalf of SecTrans to the Commander.

2. Stage III will be activated by the Commander upon approval by SecDef. Upon activation, SecDef will request SecTrans to allocate sealift capacity based on DoD requirements, in accordance with Title 1 of DPA, to meet the Contingency requirement. All Participants' capacity committed to VISA is subject to use during Stage III.

3. Upon allocation of sealift assets by SecTrans, through its designated representative MARAD, the Commander will negotiate and execute Contingency contracts with Participants, using pre-approved rate methodologies as established jointly by SecTrans and SecDef in fulfillment of section 46 U.S.C. 53107. Until execution of such contract, the Participant agrees that the assets remain subject to the provisions 46 U.S.C. 56301.

4. Simultaneously with activation of Stage III, the DoD Sealift Readiness Program (SRP) will be activated for those carriers still under obligation to that program.

G. Partial Activation

As used in this Section V, activation "in part" of any Stage under this Agreement shall mean one of the following:

1. Activation of only a portion of the committed capacity of some, but not all, of the Participants in any Stage that is activated; or

2. Activation of the entire committed capacity of some, but not all, of the Participants in any Stage that is activated; or

3. Activation of only a portion of the entire committed capacity of all of the Participants in any Stage that is activated.

VI. Terms and Conditions

A. Participation

1. Any U.S.-flag vessel operator organized under the laws of a State of the United States, or the District of Columbia, may become a "Participant" in this Agreement by submitting an executed copy of the form referenced in Section VII, and by entering into a VISA Enrollment Contract with DoD which establishes a legal obligation to perform and which specifies payment or payment methodology for all services rendered.

2. The term "Participant" includes the entity described in VI.A.1 above, and all United States subsidiaries and affiliates of the entity which own, operate, charter or lease ships and intermodal equipment in the regular course of their business and in which the entity holds a controlling interest.

3. Upon request of the entity executing the form referenced in Section VII, the term "Participant" may include the controlled non-domestic subsidiaries and affiliates of such entity signing this Agreement, provided that the Administrator, in coordination with the Commander, grants specific approval for their inclusion.

4. Any entity receiving payments under the Maritime Security Program (MSP), pursuant to the Maritime Security Act of 2003 (MSA 2003) (Public Law 108–136, 117 Stat. 1392)), shall become a "Participant" with respect to all vessels enrolled in MSP at all times until the date the MSP operating agreement would have terminated according to its original terms. The MSP operator shall be enrolled in VISA as a Stage III Participant, at a minimum. Such participation will satisfy the requirement for an MSP participant to be enrolled in an emergency preparedness program approved by SecDef as provided in 46 U.S.C. 53107.

5. A Participant shall be subject only to the provisions of this Agreement and not to the provisions of the SRP.

6. MARAD shall publish periodically in the **Federal Register** a list of Participants.

B. Agreement of Participant

1. Each Participant agrees to provide commercial sealift and/or intermodal shipping services/systems in accordance with DoD Contingency contracts. USTRANSCOM will review and approve each Participant's commitment to ensure it meets DoD Contingency requirements. A Participant's capacity commitment to Stages I and II will be one of the considerations in determining the level of DoD peacetime contracts awarded with the exception of Jones Act capacity (as discussed in paragraph 4 below).

2. DoD may also enter into Contingency contracts, not linked to peacetime contract commitments, with Participants, as required to meet Stage I and II requirements.

3. Commitment of Participants' resources to VISA is as follows:

a. Stage III: A carrier desiring to participate in DoD peacetime contracts/traffic must commit no less than 50% of its total U.S.-flag capacity into Stage III. Carriers receiving DOT payments under the MSP, or carriers subject to Section 909 of Merchant Marine Act of 1936, as amended, that are not enrolled in the SRP will have vessels receiving such assistance enrolled in Stage III. Participants' capacity under charter to DoD will be considered "organic" to DoD, and does not count towards the Participant's Contingency commitment during the period of the charter. Participants utilized under Stage III activation will be compensated based upon a DoD pre-approved rate methodology.

b. Stages I and II: DoD will annually develop and publish minimum commitment requirements for Stages I and II. Normally, the awarding of a long-term (*i.e.,* one year or longer) DoD contract, exclusive of charters, will include the annual predesignated minimum commitment to Stages I and/or II. Participants desiring to bid on DoD peacetime contracts will be required to provide commitment levels to meet DoD-established Stage I and/or II minimums on an annual basis. Participants may gain additional consideration for peacetime contract cargo allocation awards by committing capacity to Stages I and II beyond the specified minimums. If the Participant

is awarded a contract reflecting such a commitment, that commitment shall become the actual amount of a Participant's U.S.-flag capacity commitment to Stages I and II. A Participant's Stage III U.S.-flag capacity commitment shall represent its total minimum VISA commitment. That Participant's Stage I and II capacity commitments as well as any volunteer capacity contribution by Participant are portions of Participant's total VISA commitment. Participants activated during Stages I and II will be compensated in accordance with prenegotiated Contingency contracts.

4. Participants exclusively operating vessels engaged in domestic trades will be required to commit 50% of that capacity to Stage III. Such Participants will not be required to commit capacity to Stages I and II as a consideration of domestic peacetime traffic and/or contract award. However, such Participants may voluntarily agree to commit capacity to Stages I and/or II.

5. The Participant owning, operating, or controlling an activated ship or ship capacity will provide intermodal equipment and management services needed to utilize the ship and equipment at not less than the Participant's normal efficiency, in accordance with the prenegotiated Contingency contracts implementing this Agreement.

C. Effective Date and Duration of Participation

1. Participation in this Agreement is effective upon execution by MARAD of the submitted form referenced in Section VII, and approval by USTRANSCOM by execution of an Enrollment Contract, for Stage III, at a minimum.

2. VISA participation remains in effect until the Participant terminates the Agreement in accordance with paragraph D below, or termination of the Agreement in accordance with 44 CFR Sec. 332.4. Notwithstanding termination of VISA or participation in VISA, obligations pursuant to executed DoD peacetime contracts shall remain in effect for the term of such contracts and are subject to all terms and conditions thereof.

D. Participant Termination of VISA

1. Except as provided in paragraph 2 below, a Participant may terminate its participation in VISA upon written notice to the Administrator. Such termination shall become effective 30 days after written notice is received, unless obligations incurred under VISA by virtue of activation of any Contingency contract cannot be fulfilled prior to the termination date, in which case the Participant shall be required to complete the performance of such obligations. Voluntary termination by a carrier of its VISA participation shall not act to terminate or otherwise mitigate any separate contractual commitment entered into with DoD.

2. A Participant having an MSP operating agreement with SecTrans shall not withdraw from this Agreement at any time during the original term of the MSP operating agreement.

3. A Participant's withdrawal, or termination of this Agreement, will not deprive a Participant of an antitrust defense otherwise available to it in accordance with DPA Section 708 for the fulfillment of obligations incurred prior to withdrawal or termination.

4. A Participant otherwise subject to the DoD SRP that voluntarily withdraws from this Agreement will become subject again to the DoD SRP.

E. Rules and Regulations

Each Participant acknowledges and agrees to abide by all provisions of DPA Section 708, and regulations related thereto which are promulgated by the Secretary, the Attorney General, and the Chairman-FTC. Standards and procedures pertaining to voluntary agreements have been promulgated in 44 CFR Part 332. 46 CFR Part 340 establishes procedures for assigning the priority for use and the allocation of shipping services, containers and chassis. The JPAG will inform Participants of new and amended rules and regulations as they are issued in accordance with law and administrative due process. Although Participants may withdraw from VISA, they remain subject to all authorized rules and regulations while in Participant status.

F. Carrier Coordination Agreements (CCA)

1. When any Stage of VISA is activated or when DoD has requested volunteer capacity pursuant to Section V.B. of VISA, Participants may implement approved CCAs to meet the needs of DoD and to minimize the disruption of their services to the civil economy.

2. A CCA for which the parties seek the benefit of Section 708(j) of the DPA shall be identified as such and shall be submitted to the Administrator for approval and certification in accordance with Section 708(f)(1)(A) of the DPA. Upon approval and certification, the Administrator shall transmit the Agreement to the Attorney General for a finding in accordance with Section 708(f)(1)(B) of the DPA. Parties to approved CCAs may avail themselves of the antitrust defenses set forth in Section 708(j) of the DPA. Nothing in VISA precludes Participants from engaging in lawful conduct (including carrier coordination activities) that lies outside the scope of an approved Carrier Coordination Agreement; but antitrust defenses will not be available pursuant to Section 708(j) of the DPA for such conduct.

3. Participants may seek approval for CCAs at any time.

G. Enrollment of Capacity (Ships and Equipment)

1. A list identifying the ships/capacity and intermodal equipment committed by a Participant to each Stage of VISA will be prepared by the Participant and submitted to USTRANSCOM within seven days after a carrier has become a Participant. USTRANSCOM will maintain a record of all such commitments. Participants will notify USTRANSCOM of any changes not later than seven days prior to the change.

2. USTRANSCOM will provide a copy of each Participant's VISA commitment data and all changes to MARAD.

3. Information which a Participant identifies as privileged or business confidential/proprietary data shall be withheld from public disclosure in accordance with Section 708(h)(3) and Section 705(e) of the DPA, 5 U.S.C. 552(b), and 44 CFR Part 332.

4. Enrolled ships are required to comply with 46 CFR Part 307, Establishment of Mandatory Position Reporting System for Vessels.

H. War Risk Insurance

1. Where commercial war risk insurance is not available on reasonable terms and conditions, DOT shall provide non-premium government war risk insurance, subject to the provisions of 46 U.S.C. 53905.

2. Pursuant to 46 CFR 308.1(c), the Administrator (or DOT) will find each ship enrolled or utilized under this agreement eligible for U.S. Government war risk insurance.

I. Antitrust Defense

1. Under the provisions of DPA Section 708, each carrier shall have available as a defense to any civil or criminal action brought under the antitrust laws (or any similar law of any State) with respect to any action taken to develop or carry out this Agreement, that such act was taken in the course of developing or carrying out this Agreement and that the Participant complied with the provisions of DPA Section 708 and any regulation thereunder, and acted in accordance with the terms of this Agreement.

2. This defense shall not be available to the Participant for any action occurring after termination of this Agreement. This defense shall not be available upon the modification of this Agreement with respect to any subsequent action that is beyond the scope of the modified text of this Agreement, except that no such modification shall be accomplished in a way that will deprive the Participant of antitrust defense for the fulfillment of obligations incurred.

3. This defense shall be available only if and to the extent that the Participant asserting it demonstrates that the action, which includes a discussion or agreement, was within the scope of this Agreement.

4. The person asserting the defense bears the burden of proof.

5. The defense shall not be available if the person against whom it is asserted shows that the action was taken for the purpose of violating the antitrust laws.

6. As appropriate, the Administrator, on behalf of SecTrans, and DoD will support agreements filed by Participants with the Federal Maritime Commission that are related to the standby or Contingency implementation of VISA.

J. Breach of Contract Defense

Under the provisions of DPA Section 708, in any action in any Federal or State court for breach of contract, there shall be available as a defense that the alleged breach of contract was caused predominantly by action taken by a Participant during an emergency (including action taken in imminent anticipation of an emergency) to carry out this Agreement. Such defense shall not release the party asserting it from any obligation under applicable law to mitigate damages to the greatest extent possible.

K. Vessel Sharing Agreements (VSA)

1. VISA allows Participants the use of a VSA to utilize non-Participant U.S.-flag or foreign-owned and operated foreign flag vessel capacity as a substitute for VISA Contingency capability provided:

a. The foreign flag capacity is utilized in accordance with cargo preference laws and regulations.

b. The use of a VSA, either currently in use or a new proposal, as a substitution to meet DoD Contingency requirements is agreed upon by USTRANSCOM and MARAD.

c. The Participant carrier demonstrates adequate control over the offered VSA capacity during the period of utilization.

d. Service requirements are satisfied.

e. Participant is responsible to DoD for the carriage or services contracted for. Though VSA capacity may be utilized to fulfill a Contingency commitment, a Participant's U.S.-flag VSA capacity in another Participant's vessel shall not act in a manner to increase a Participant's capacity commitment to VISA.

2. Participants will apprise MARAD and USTRANSCOM in advance of any change in a VSA of which it is a member, if such changes reduce the availability of Participant capacity provided for in any approved and accepted Contingency Concept of Operations.

3. Participants will not act as a broker for DoD cargo unless requested by USTRANSCOM.

VII. Application and Agreement

The Administrator, in coordination with the Commander has adopted the following form ("Application to Participate in the Voluntary Intermodal Sealift Agreement") on which intermodal ship operators may apply to become a Participant in this Agreement. The form incorporates, by reference, the terms of this Agreement.

United States of America, Department of Transportation, Maritime Administration

Application To Participate in the Voluntary Intermodal Sealift Agreement

The applicant identified below hereby applies to participate in the Maritime Administration's agreement entitled "Voluntary Intermodal Sealift Agreement." The text of said Agreement is published in _____ **Federal Register** _____, _____, 20_____.

This Agreement is authorized under Section 708 of the Defense Production Act of 1950, as amended (50 App. U.S.C. 2158). Regulations governing this Agreement appear at 44 CFR Part 332 and are reflected at 49 CFR Subtitle A.

The applicant, if selected, hereby acknowledges and agrees to the incorporation by reference into this Application and Agreement of the entire text of the Voluntary Intermodal Sealift Agreement published in _____ **Federal Register** _____, _____, 20_____, as though said text were physically recited herein.

The Applicant, as a Participant, agrees to comply with the provisions of Section 708 of the Defense Production Act of 1950, as amended, the regulations of 44 CFR Part 332 and as reflected at 49 CFR Subtitle A, and the terms of the Voluntary Intermodal Sealift Agreement. Further, the applicant, if selected as a Participant, hereby agrees to contractually commit to make specifically enrolled vessels or capacity, intermodal equipment and management of intermodal transportation systems available for use by the Department of Defense and to other Participants as discussed in this Agreement and the subsequent Department of Defense Voluntary Intermodal Sealift Agreement Enrollment Contract for the purpose of meeting national defense requirement.

Attest:

_____

(Corporate Secretary)

(CORPORATE SEAL)

Effective Date: _____

(Secretary)

(SEAL)

_____

(Applicant-Corporate Name)

_____

(Signature)

_____

(Position Title)

United States of America, Department of Transportation, Maritime Administration

By: _____

Maritime Administrator

Dated: March 17, 2010.

By Order of the Maritime Administrator.

Christine Gurland,

Secretary, Maritime Administration.

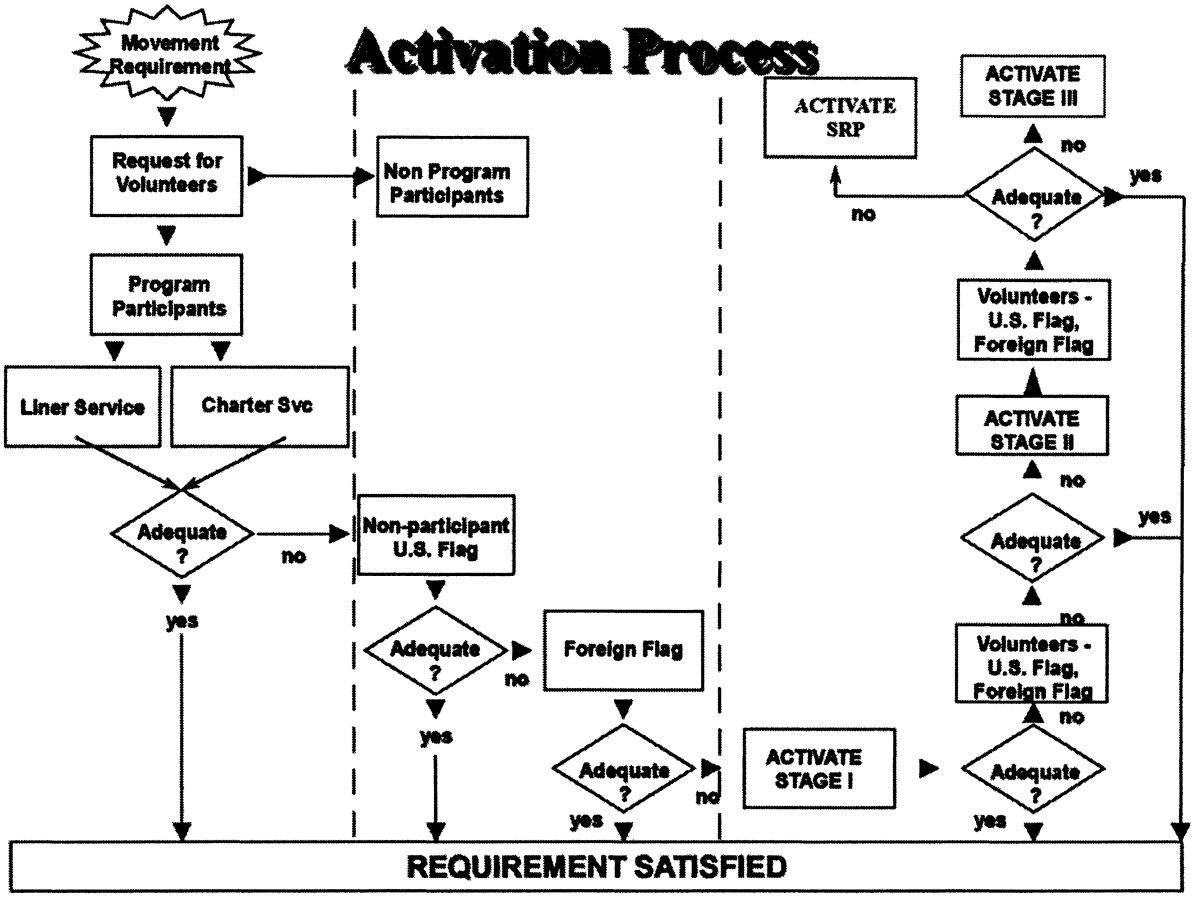

[FR Doc. 2010–6542 Filed 3–23–10; 8:45 am]

BILLING CODE 4910–81–P

DEPARTMENT OF THE TREASURY

Submission for OMB Review; Comment Request

March 17, 2010.

The Department of the Treasury will submit the following public information collection requirements to OMB for review and clearance under the Paperwork Reduction Act of 1995, Public Law 104–13 on or after the date of publication of this notice. A copy of the submissions may be obtained by calling the Treasury Bureau Clearance Officer listed. Comments regarding these information collections should be addressed to the OMB reviewer listed and to the Treasury PRA Clearance Officer, Department of the Treasury, 1750 Pennsylvania Avenue, NW., Suite 11010, Washington, DC 20220.

DATES: Written comments should be received on or before April 23, 2010 to be assured of consideration.

Internal Revenue Service (IRS)

OMB Number: 1545–1700.

Type of Review: Extension without change of a currently approved collection.

Title: Qualified Subchapter S Subsidiary Election.

Form Number: 8869.

Abstract: Effective for tax years beginning after December 31, 1996, Internal Revenue Code section 1361(b)(3) allows an S corporation to own a corporate subsidiary, but only if it is wholly owned. To do so, the parent S corporation must elect to treat the wholly owned subsidiary as a qualified subchapter S subsidiary (Q Sub). Form 8869 is used to make this election.

Respondents: Private sector: Businesses or other for-profits.

Estimated Total Burden Hours: 40,750 hours.

OMB Number: 1545–1705.

Type of Review: Extension without change of a currently approved collection.

Title: REG–246249–96 (TD 9010—Final) Information Reporting Requirements for Certain Payments Made on Behalf of Another Person, Payments to Joint Payees, and Payments of Gross Proceeds From Sales Involving.

Abstract: The regulation under section 6041 clarifies who is the payee for information reporting purposes if a check or other instrument is made payable to joint payees, provides information reporting requirements for escrow agents and other persons making payments on behalf of another person, and clarifies that the amount to be reported as paid is the gross amount of the payment. The regulation also removes investment advisers from the list of exempt recipients for information reporting purposes under section 6045.

Respondents: Private sector: Businesses or other for-profits.

Estimated Total Burden Hours: 1 hour.

OMB Number: 1545–1130.

Type of Review: Extension without change of a currently approved collection.

Title: Special Loss Discount Account and Special Estimated Tax Payments for Insurance Companies.

Form Number: 8816.

Abstract: Form 8816 is used by insurance companies claiming an additional deduction under IRC section 847 to reconcile their special loss discount and special estimated tax payments, and to determine their tax benefit associated with the deduction. The information is needed by the IRS to determine that the proper additional deduction was claimed and to insure

the proper amount of special estimated tax was computed and deposited.

Respondents: Private sector: Businesses or other for-profits.

Estimated Total Burden Hours: 19,830 hours.

OMB Number: 1545–1706.

Type of Review: Extension without change of a currently approved collection.

Title: TD 9315—Section 1503(d) Closing Agreement Requests.

Abstract: Revenue Procedure 2000–42 informs taxpayers of the information they must submit to request a closing agreement under Reg. S1.1503–2(g)(2)(IV)(B)(2)(I) to prevent the recapture of dual consolidated losses (DCLs) upon the occurrence of certain triggering events.

Respondents: Private sector: Businesses or other for-profits.

Estimated Total Burden Hours: 2,000 hours.

OMB Number: 1545–1582.

Type of Review: Extension without change of a currently approved collection.

Title: REG–209373–81 (TD 8797—Final), Election to Amortize Start-Up Expenditures for Active Trade or Business.

Abstract: The information is needed to comply with section 195 of the Internal Revenue Code, which requires taxpayers to make an election in order to amortize start-up expenditures. The information will be used for compliance and audit purposes.

Respondents: Private sector: Businesses or other for-profits.

Estimated Total Burden Hours: 37,500 hours.

OMB Number: 1545–1160.

Type of Review: Extension without change of a currently approved collection.

Title: CO–93–90 (Final) Corporations; Consolidated Returns-Special Rules Relating To Dispositions and Deconsolidations of Subsidiary Stock.

Abstract: These regulations prevent elimination of corporate-level tax because of the operation of the consolidated returns investment adjustment rules. Statements are required for dispositions of a subsidiary's stock for which losses are claimed, for basis reductions within 2 years of the stock's deconsolidation, and for elections by the common parent to retain the NOLs of a disposed subsidiary.

Respondents: Private sector: Businesses or other for-profits.

Estimated Total Burden Hours: 6,000 hours.

OMB Number: 1545–1732.

Type of Review: Extension without change of a currently approved collection.

Title: REG–105946–00 (TD 8995—Final) Mid-Contract Change in Taxpayer.

Abstract: The information is needed by taxpayers who assume the obligation to account for the income from long-term contracts as the result of certain nontaxable transactions.

Respondents: Private sector: Businesses or other for-profits.

Estimated Total Burden Hours: 10,000 hours.

OMB Number: 1545–1450.

Type of Review: Extension without change of a currently approved collection.

Title: FI–59–91 (Final), Debt Instructions With Originals Issue Discount; Contingent Payments; Anti-Abuse Rule.

Abstract: The regulations provide definitions, general rules, and reporting requirements for debt instruments that provide for contingent payments. The regulations also provide definitions, general rules, and recordkeeping requirements for integrated debt instruments.

Respondents: Private sector: Businesses or other for-profits.

Estimated Total Burden Hours: 89,000 hours.

OMB Number: 1545–0138.

Type of Review: Extension without change of a currently approved collection.

Title: U.S. Departing Alien Income Tax Statement.

Form Number: 2063.

Abstract: Form 2063 is used by a departing resident alien against whom a termination assessment has not been made, or a departing non-resident alien who has no taxable income from United States sources, to certify that they have satisfied all U.S. income tax obligations. The data is used by the IRS to certify that departing aliens have complied with U.S. income tax laws.

Respondents: Individuals or Households.

Estimated Total Burden Hours: 17,049 hours.

OMB Number: 1545–0240.

Type of Review: Revision of a currently approved collection.

Title: Claim for Refund of Income Tax Return Preparer Penalties.

Form Number: 6118.

Abstract: Form 6118 is used by preparers to file for a refund of penalties incorrectly charged. The information enables the IRS to process the claim and have the refund issued to the tax return preparer.

Respondents: Individuals or Households.

Estimated Total Burden Hours: 11,400 hours.

OMB Number: 1545–1144.

Type of Review: Extension without change of a currently approved collection.

Title: Generation-Skipping Transfer Tax Return for Distributions.

Form Number: 706–GS (D).

Abstract: Form 706–GS (D) is used by distributees to compute and report the Federal GST tax imposed by IRC section 2601. IRS uses the information to enforce this tax and to verify that the tax has been properly computed.

Respondents: Individuals or Households.

Estimated Total Burden Hours: 980 hours.

OMB Number: 1545–1724.

Type of Review: Extension without change of a currently approved collection.

Title: REG–109481–99 (TD 9076—Final) Special Rules Under Section 417(a)(7) for Written Explanations Provided by Qualified Retirement Plans After Annuity Starting Dates.

Abstract: The collection of information requirement in sections 1.417(e)–1(b)(3)(iv)(B) and 1.417(e)–1(b)(3)(v)(A) is required to ensure that a participant and the participant's spouse consent to a form of distribution from a qualified plan that may result in reduced periodic payments.

Respondents: Individuals or Households.

Estimated Total Burden Hours: 12,500 hours.

OMB Number: 1545–0236.

Type of Review: Extension without change of a currently approved collection.

Title: Occupational Tax and Registration Return for Wagering.

Form Number: 11–C.

Abstract: Form 11–C is used to register persons accepting wagers (IRC section 4412). IRS uses this form to register the respondent, collect the annual stamp tax (IRC section 4411), and to verify that the tax on wagers is reported on Form 730.

Respondents: Private sector: Businesses or other for-profits.

Estimated Total Burden Hours: 126,175 hours.

OMB Number: 1545–1559.

Type of Review: Extension without change of a currently approved collection.

Title: Revenue Procedures 98–46 and 97–44, LIFO Conformity Requirement.

Abstract: Revenue Procedure 97–44 permits automobile dealers that comply

with the terms of the revenue procedure to continue using the LIFO inventory method despite previous violations of the LIFO conformity requirements of section 472(c) or (e)(2). Revenue Procedure 98–46 modifies Revenue Procedure 97–44 by allowing medium- and heavy-duty truck dealers to take advantage of the favorable relief provided in Revenue Procedure 97–44.

Respondents: Private sector: Businesses or other for-profits.

Estimated Total Burden Hours: 100,000 hours.

OMB Number: 1545–1704.

Type of Review: Extension without change of a currently approved collection.

Title: Revenue Procedure 2000–41 (Change in Minimum Funding Method).

Form Number:

Abstract: This revenue procedure provides a mechanism whereby a plan sponsor or plan administrator may obtain a determination from the Internal Revenue Service that its proposed change in the method of funding its pension plan(s) meets the standards of section 412 of the Internal Revenue Code.

Respondents: Private sector: Businesses or other for-profits.

Estimated Total Burden Hours: 5,400 hours.

OMB Number: 1545–1451.

Type of Review: Extension without change of a currently approved collection.

Title: REG–248900–96 (TD 8712—Final), Definition of Private Activity Bonds.

Abstract: Section 103 provides generally that interest on certain State or local bonds is excluded from gross income. However, under sections 103(b)(1) and 141, interest on private activity bonds (other than qualified bonds) is not excluded. The regulations provide rules, for purposes of section 141, to determine how bond proceeds are measured and used and how debt service for those bonds is paid or secured.

Respondents: State, Local, and Tribal Governments.

Estimated Total Burden Hours: 30,100 hours.

OMB Number: 1545–1299.

Type of Review: Extension without change of a currently approved collection.

Title: IA–54–90 (TD 8459—Final) Settlement Funds.

Abstract: The reporting requirements affect taxpayers that are qualified settlement funds; they will be required to file income tax returns, estimated income tax returns, and withholding tax returns. The information will facilitate taxpayer examinations.

Respondents: Private sector: Businesses or other for-profits.

Estimated Total Burden Hours: 3,542 hours.

Bureau Clearance Officer: R. Joseph Durbala, Internal Revenue Service, 1111 Constitution Avenue, NW., Room 6129, Washington, DC 20224; (202) 622–3634.

OMB Reviewer: Shagufta Ahmed, Office of Management and Budget, New Executive Office Building, Room 10235, Washington, DC 20503; (202) 395–7873.

Celina Elphage,

Treasury PRA Clearance Officer.

[FR Doc. 2010–6406 Filed 3–23–10; 8:45 am]

BILLING CODE 4830–01–P

DEPARTMENT OF THE TREASURY

Submission for OMB Review; Comment Request

March 17, 2010.

The Department of the Treasury will submit the following public information collection requirements to OMB for review and clearance under the Paperwork Reduction Act of 1995, Public Law 104–13 on or after the date of publication of this notice. A copy of the submissions may be obtained by calling the Treasury Bureau Clearance Officer listed. Comments regarding these information collections should be addressed to the OMB reviewer listed and to the Treasury PRA Clearance Officer, Department of the Treasury, 1750 Pennsylvania Avenue, NW., Suite 11010, Washington, DC 20220.

DATES: Written comments should be received on or before April 23, 2010 to be assured of consideration.

Internal Revenue Service (IRS)

OMB Number: 1545–1447.

Type of Review: Extension without change of a currently approved collection.

Title: Losses on Small Business Stock.

Abstract: Section 1.1244(e)–1(b) of the regulation requires that a taxpayer claiming an ordinary loss with respect to section 1244 stock must have records sufficient to establish that the taxpayer satisfies the requirements of section 1244 and is entitled to the loss. The records are necessary to enable the Service examiner to verify that the stock qualifies as section 1244 stock and to determine whether the taxpayer is entitled to the loss.

Respondents: Private sector: Businesses or other for-profits; Individuals or households.

Estimated Total Burden Hours: 2,000 hours.

OMB Number: 1545–2028.

Type of Review: Revision of a currently approved collection.

Title: Fuel Cell Motor Vehicle Credit.

Notice Number: 2008–33.

Abstract: This notice sets forth interim guidance, pending the issuance of regulations, relating to the new fuel cell motor vehicle credit under section 30B(a)(1) and (b) of the Internal Revenue Code.

Respondents: Private sector: Businesses or other for-profits; Individuals or households.

Estimated Total Burden Hours: 200 hours.

OMB Number: 1545–2153.

Type of Review: Extension without change of a currently approved collection.

Title: Credit for Carbon Dioxide Sequestration Under Section 45Q.

Notice Number: 2009–83.

Abstract: This notice sets forth interim guidance, pending the issuance of regulations, relating to the credit for carbon dioxide sequestration (CO_2 sequestration credit) under § 45Q of the Internal Revenue Code.

Respondents: Private sector: Businesses or other for-profits.

Estimated Total Burden Hours: 180 hours.

Bureau Clearance Officer: R. Joseph Durbala, Internal Revenue Service, 1111 Constitution Avenue, NW., Room 6129, Washington, DC 20224; (202) 622–3634.

OMB Reviewer: Shagufta Ahmed, Office of Management and Budget, New Executive Office Building, Room 10235, Washington, DC 20503; (202) 395–7873.

Dawn D. Wolfgang,

Treasury PRA Clearance Officer.

[FR Doc. 2010–6407 Filed 3–23–10; 8:45 am]

BILLING CODE 4830–01–P

DEPARTMENT OF THE TREASURY

Office of Foreign Assets Control

Additional Designations, Foreign Narcotics Kingpin Designation Act

AGENCY: Office of Foreign Assets Control, Treasury.

ACTION: Notice.

SUMMARY: The Treasury Department's Office of Foreign Assets Control ("OFAC") is publishing the names of 15 individuals and 8 entities whose property and interests in property have been blocked pursuant to the Foreign Narcotics Kingpin Designation Act ("Kingpin Act") (21 U.S.C. 1901–1908, 8 U.S.C. 1182).

DATES: The designation by the Director of OFAC of the 15 individuals and 8

entities identified in this notice pursuant to section 805(b) of the Kingpin Act is effective on March 18, 2010.

FOR FURTHER INFORMATION CONTACT: Assistant Director, Compliance Outreach & Implementation, Office of Foreign Assets Control, Department of the Treasury, Washington, DC 20220, tel.: 202/622–2490.

SUPPLEMENTARY INFORMATION:

Electronic and Facsimile Availability

This document and additional information concerning OFAC are available on OFAC's Web site (*http://www.treas.gov/ofac*) or via facsimile through a 24-hour fax-on-demand service, tel.: (202) 622–0077.

Background

The Kingpin Act became law on December 3, 1999. The Kingpin Act establishes a program targeting the activities of significant foreign narcotics traffickers and their organizations on a worldwide basis. It provides a statutory framework for the President to impose sanctions against significant foreign narcotics traffickers and their organizations on a worldwide basis, with the objective of denying their businesses and agents access to the U.S. financial system and the benefits of trade and transactions involving U.S. companies and individuals.

The Kingpin Act blocks all property and interests in property, subject to U.S. jurisdiction, owned or controlled by significant foreign narcotics traffickers as identified by the President. In addition, the Secretary of the Treasury consults with the Attorney General, the Director of the Central Intelligence Agency, the Director of the Federal Bureau of Investigation, the Administrator of the Drug Enforcement Administration, the Secretary of Defense, the Secretary of State, and the Secretary of Homeland Security when designating and blocking the property and interests in property, subject to U.S. jurisdiction, of persons who are found to be: (1) Materially assisting in, or providing financial or technological support for or to, or providing goods or services in support of, the international narcotics trafficking activities of a person designated pursuant to the Kingpin Act; (2) owned, controlled, or directed by, or acting for or on behalf of, a person designated pursuant to the Kingpin Act; or (3) playing a significant role in international narcotics trafficking.

On March 18, 2010, the Director of OFAC designated 15 individuals and 8 entities whose property and interests in property are blocked pursuant to section 805(b) of the Foreign Narcotics Kingpin Designation Act.

The list of additional designees is as follows:

Individuals:

1. RENDON HERRERA, Freddy Enrique (a.k.a. "El Aleman"); Colombia; DOB 21 Sep 1973; POB Colombia; Citizen Colombia; Nationality Colombia; Cedula No. 15349556 (Colombia); (INDIVIDUAL) [SDNTK]

2. USUGA DAVID, Juan de Dios, Colombia; POB Monteria, Cordoba; Citizen Colombia; Nationality Colombia; Cedula No. 71938240 (Colombia); (INDIVIDUAL) [SDNTK]

3. USUGA DAVID, Dairo Antonio, Colombia; DOB 15 Sep 1971; POB Colombia; Citizen Colombia; Nationality Colombia; Cedula No. 71980054 (Colombia); (INDIVIDUAL) [SDNTK]

4. OCAMPO MORALES, Jorge Eliecer, Colombia; DOB 16 Feb 1979; POB Colombia; Citizen Colombia; Nationality Colombia; Cedula No. 8436557 (Colombia); (INDIVIDUAL) [SDNTK]

5. SIERRA FERNANDEZ, Juan Felipe, c/o CONTROL TOTAL LTDA, Colombia; c/o CANINOS PROFESIONALES LTDA, Medellin, Colombia; Colombia; DOB 13 Mar 1971; POB Medellin, Colombia; Citizen Colombia; Nationality Colombia; Cedula No. 98554666 (Colombia); (INDIVIDUAL) [SDNTK]

6. OCHOA GUISAO, Walter, Colombia; POB Colombia; Citizen Colombia; Nationality Colombia; Cedula No. 10179825 (Colombia); (INDIVIDUAL) [SDNTK]

7. NEGRETE LUNA, Jose Maria, Colombia; DOB 06 Jun 1971; POB Lorica, Cordoba, Colombia; Citizen Colombia; Nationality Colombia; Cedula No. 15031586 (Colombia); (INDIVIDUAL) [SDNTK]

8. VARGAS GUTIERREZ, Roberto, Colombia; POB Colombia; Citizen Colombia; Nationality Colombia; Cedula No. 71981878 (Colombia); (INDIVIDUAL) [SDNTK]

9. MEJIA VALENCIA, Gonzalo Alberto, Carrera 41, No. 29A–29, Maranilla, Antioquia, Colombia; DOB 23 Apr 1979; POB Colombia; Citizen Colombia; Nationality Colombia; Cedula No. 70729968 (Colombia); Passport AJ441012 (Colombia); (INDIVIDUAL) [SDNTK]

10. SANCHEZ GONZALEZ, Arnulfo, Colombia; DOB 14 Jul 1972; POB Casanare, Colombia; Citizen Colombia; Nationality Colombia; (INDIVIDUAL) [SDNTK]

11. MANCO TORRES, Jhon Freddy, c/o VIGILAR COLOMBIA LTDA., Apartado, Antioquia, Colombia; Colombia; DOB 22 Oct 1973; POB Colombia; Citizen Colombia; Nationality Colombia; Cedula No. 71981992 (Colombia); (INDIVIDUAL) [SDNTK]

12. TORRES MARTINEZ, Camilo, c/o REPUESTOS EL NATO Y CIA LTDA., Medellin, Colombia; c/o MI CARRO E.U., Medellin, Colombia; c/o AGROPECUARIA HATO SANTA MARIA LTDA., Medellin, Colombia; Colombia; POB Colombia; Citizen Colombia; Nationality Colombia; Cedula No. 71984381 (Colombia); (INDIVIDUAL) [SDNTK]

13. TORO OSORIO, Julio Alberto, c/o RENTA CAMPEROS URABA LTDA., Apartado, Antioquia, Colombia; c/o VIGILAR COLOMBIA LTDA., Apartado, Antioquia, Colombia; c/o CENTRO DE DIAGNOSTICO AUTOMOTRIZ EJE BANANERO S.A., Apartado, Antioquia, Colombia; c/o REPUESTOS EL NATO Y CIA LTDA., Medellin, Colombia; Colombia; POB Colombia; Citizen Colombia; Nationality Colombia; Cedula No. 15367370 (Colombia); (INDIVIDUAL) [SDNTK]

14. NINO CARDENAS, Julio Cesar, c/o MI CARRO E.U., Medellin, Colombia; POB Colombia; Citizen Colombia; Nationality Colombia; Cedula No. 70513214 (Colombia); (INDIVIDUAL) [SDNTK]

15. SALAZAR CARDENAS, Carlos Mario, c/o MI CARRO E.U., Medellin, Colombia; POB Colombia; Citizen Colombia; Nationality Colombia; Cedula No. 13485023 (Colombia); (INDIVIDUAL) [SDNTK]

Entities:

16. VIGILAR COLOMBIA LTDA., Cl. 99 # 106–20, Apartado, Antioquia, Colombia; NIT # 8909390136 (Colombia); (ENTITY) [SDNTK]

17. RENTA CAMPEROS URABA LTDA., Cra. 101 # 94–33, Apartado, Antioquia, Colombia; Chigorodo, Antioquia, Colombia; Turbo, Antioquia, Colombia; Necocli, Antioquia, Colombia; NIT # 8909417652 (Colombia); (ENTITY) [SDNTK]

18. CONTROL TOTAL LTDA, Cra. 45, 23 A Sur-32, Envigado, Antioquia, Colombia; NIT # 8110160518 (Colombia); (ENTITY) [SDNTK]

19. CANINOS PROFESIONALES LTDA, Carrera 43B No. 14–51, Oficina 103, Medellin, Colombia; NIT # 8002104948 (Colombia); (ENTITY) [SDNTK]

20. MI CARRO E.U., Calle 33 No. 75C–40, Medellin, Colombia; NIT # 9000750838 (Colombia); (ENTITY) [SDNTK]

21. REPUESTOS EL NATO Y CIA LTDA., Calle 55 No, 50–111, Medellin, Colombia; NIT # 8110037873 (Colombia); (ENTITY) [SDNTK]

22. CENTRO DE DIAGNOSTICO AUTOMOTRIZ EJE BANANERO S.A.,

Carrera 104 No. 96–97, Apartado, Antioquia, Colombia; NIT # 900228328 (Colombia); (ENTITY) [SDNTK]

23. AGROPECUARIA HATO SANTA MARIA LTDA., Carrera 43B No. 12–133, Medellin, Colombia; NIT # 9001387615 (Colombia); (ENTITY) [SDNTK]

Dated: March 18, 2010.

Adam J. Szubin,

Director, Office of Foreign Assets Control.

[FR Doc. 2010–6410 Filed 3–23–10; 8:45 am]

BILLING CODE 4810–AL–P

DEPARTMENT OF THE TREASURY

Office of Foreign Assets Control

Designation of Two Entities Pursuant to Executive Order 13224

AGENCY: Office of Foreign Assets Control, Treasury.

ACTION: Notice.

SUMMARY: The Treasury Department's Office of Foreign Assets Control ("OFAC") is publishing the names of two newly-designated individuals whose property and interests in property are blocked pursuant to Executive Order 13224 of September 23, 2001, "Blocking Property and Prohibiting Transactions With Persons Who Commit, Threaten To Commit, or Support Terrorism."

DATES: The designation by the Director of OFAC of the two entities identified in this notice, pursuant to Executive Order 13224, is effective on March 18, 2010.

FOR FURTHER INFORMATION CONTACT: Assistant Director, Compliance Outreach & Implementation, Office of Foreign Assets Control, Department of the Treasury, Washington, DC 20220, tel.: 202/622–2490.

SUPPLEMENTARY INFORMATION:

Electronic and Facsimile Availability

This document and additional information concerning OFAC are available from OFAC's Web site (*http://www.treas.gov/ofac*) or via facsimile through a 24-hour fax-on-demand service, tel.: 202/622–0077.

Background

On September 23, 2001, the President issued Executive Order 13224 (the "Order") pursuant to the International Emergency Economic Powers Act, 50 U.S.C. 1701–1706, and the United Nations Participation Act of 1945, 22 U.S.C. 287c. In the Order, the President declared a national emergency to address grave acts of terrorism and threats of terrorism committed by foreign terrorists, including the September 11, 2001, terrorist attacks in New York, Pennsylvania, and at the Pentagon. The Order imposes economic sanctions on persons who have committed, pose a significant risk of committing, or support acts of terrorism. The President identified in the Annex to the Order, as amended by Executive Order 13268 of July 2, 2002, 13 individuals and 16 entities as subject to the economic sanctions. The Order was further amended by Executive Order 13284 of January 23, 2003, to reflect the creation of the Department of Homeland Security.

Section 1 of the Order blocks, with certain exceptions, all property and interests in property that are in or hereafter come within the United States or the possession or control of United States persons, of: (1) Foreign persons listed in the Annex to the Order; (2) foreign persons determined by the Secretary of State, in consultation with the Secretary of the Treasury, the Secretary of the Department of Homeland Security and the Attorney General, to have committed, or to pose a significant risk of committing, acts of terrorism that threaten the security of U.S. nationals or the national security, foreign policy, or economy of the United States; (3) persons determined by the Director of OFAC, in consultation with the Departments of State, Homeland Security and Justice, to be owned or controlled by, or to act for or on behalf of those persons listed in the Annex to the Order or those persons determined to be subject to subsection 1(b), 1(c), or 1(d)(i) of the Order; and (4) except as provided in section 5 of the Order and after such consultation, if any, with foreign authorities as the Secretary of State, in consultation with the Secretary of the Treasury, the Secretary of the Department of Homeland Security and the Attorney General, deems appropriate in the exercise of his discretion, persons determined by the Director of OFAC, in consultation with the Departments of State, Homeland Security and Justice, to assist in, sponsor, or provide financial, material, or technological support for, or financial or other services to or in support of, such acts of terrorism or those persons listed in the Annex to the Order or determined to be subject to the Order or to be otherwise associated with those persons listed in the Annex to the Order or those persons determined to be subject to subsection 1(b), 1(c), or 1(d)(i) of the Order.

On March 18, 2010 the Director of OFAC, in consultation with the Departments of State, Homeland Security, Justice and other relevant agencies, designated, pursuant to one or more of the criteria set forth in subsections 1(b), 1(c) or 1(d) of the Order, two entities whose property and interests in property are blocked pursuant to Executive Order 13224.

The list of designees is as follows:

AL–AQSA TV (a.k.a. AL–AQSA SATELLITE TELEVISION; a.k.a. HAMAS TV; a.k.a. SIRAJ AL–AQSA TV; a.k.a. THE AQSA LAMP), Jabaliya, Gaza, Palestinian; E-mail Address *info@aqsatv.ps;* Web site *http://www.aqsatv.ps;* Telephone: 0097282851500 Fax: 0097282858208 [SDGT]

ISLAMIC NATIONAL BANK OF GAZA (a.k.a. ISLAMIC NATIONAL BANK; a.k.a. ISLAMIC NATIONAL BANK COMPANY; a.k.a. NATIONAL AND ISLAMIC BANK; a.k.a. NATIONAL ISLAMIC BANK; a.k.a. PALESTINE ISLAMIC NATIONAL BANK), Khan Yunis, Gaza, Palestinian; Al-Rimal District, Al Wandah Al Yarmuk Street junction, Gaza City, Gaza, Palestinian; E-mail Address *info@inb.ps;* Registration ID 563201581 (Palestinian); Web site *http://www.inb.ps;* Telephone: 97082881183 Fax: 97082881184 [SDGT]

Dated: March 18, 2010.

Adam J. Szubin,

Director, Office of Foreign Assets Control.

[FR Doc. 2010–6409 Filed 3–23–10; 8:45 am]

BILLING CODE 4810–AL–P

DEPARTMENT OF THE TREASURY

United States Mint

Pricing for Bronze Medals

AGENCY: United States Mint, Department of the Treasury.

ACTION: Notice.

SUMMARY: The United States Mint is announcing the price of the 1 5/16-inch bronze medals, 1½-inch bronze medals and three-inch bronze medals.

Beginning March 25, 2010, the 1 5/16-inch bronze medals will be priced at $5.50 each; 1½-inch bronze medals will be priced at $6.00 each; and three-inch bronze medals will be priced at $42.00 each. Detailed information about product designs and availability can be found on the United States Mint Web site at *http://www.usmint.gov.*

FOR FURTHER INFORMATION CONTACT: B. B. Craig, Associate Director for Sales and Marketing; United States Mint; 801 9th Street, NW.; Washington, DC 20220; or call 202–354–7500.

Authority: 31 U.S.C. 5111, 5112 & 9701

Dated: March 17, 2010.

Edmund C. Moy,

Director, United States Mint.

[FR Doc. 2010–6335 Filed 3–23–10; 8:45 am]

BILLING CODE P

DEPARTMENT OF THE TREASURY

Office of Foreign Assets Control

Unblocking of Specially Designated Nationals Pursuant to Executive Order 13224

AGENCY: Office of Foreign Assets Control, Treasury.

ACTION: Notice.

SUMMARY: The Treasury Department's Office of Foreign Assets Control ("OFAC") is removing the name of one individual from the list of Specially Designated Nationals and Blocked Persons whose property and interests in property have been blocked pursuant to Executive Order 13224 of September 23, 2001, *Blocking Property and Prohibiting Transactions With Persons Who Commit, Threaten To Commit, or Support Terrorism.* The individual, ZIA, Mohammad, was designated pursuant to Executive Order 13224 on October 12, 2001.

DATES: The removal of the individual from the list of **SPECIALLY DESIGNATED NATIONALS AND BLOCKED PERSONS** whose property and interests in property have been blocked pursuant to Executive Order 13224 is effective as of March 2, 2010.

FOR FURTHER INFORMATION CONTACT: Assistant Director, Compliance Outreach & Implementation, Office of Foreign Assets Control, Department of the Treasury, Washington, DC 20220, tel.: 202/622–2490.

SUPPLENTARY IMFORMATION:

Electronic and Facsimile Availability

This document and additional information concerning OFAC are available from OFAC's Web site (*http://www.treas.gov/ofac*) or via facsimile through a 24-hour fax-on-demand service, tel.: 202/622–0077.

Background

On September 23, 2001, the President issued Executive Order 13224 (the "Order") pursuant to the International Emergency Economic Powers Act, 50 U.S.C. 1701–1706, and the United Nations Participation Act of 1945, 22 U.S.C. 287c, imposing economic sanctions on persons who commit, threaten to commit, or support acts of terrorism. The President identified in the Annex to the Order various individuals and entities as subject to the economic sanctions. The Order authorizes the Secretary of the Treasury, in consultation with the Secretary of State, the Attorney General, and (pursuant to Executive Order 13284) the Secretary of the Department of Homeland Security, to designate additional persons or entities determined to meet certain criteria set forth in Executive Order 13224.

One such additional person was designated by the Secretary of the Treasury on October 12, 2001. The Department of the Treasury's Office of Foreign Assets Control has determined that this individual no longer continues to meet the criteria for designation under the Order and is appropriate for removal from the list of Specially Designated Nationals and Blocked Persons.

The following designation is removed from the list of Specially Designated Nationals and Blocked Persons:

ZIA, Mohammad (a.k.a. ZIA, Ahmad), c/o Ahmed Shah s/o Painda Mohammad al-Karim Set, Peshawar, Pakistan; c/o Alam General Store Shop 17, Awami Market, Peshawar, Pakistan; c/o Zahir Shah s/o Murad Khan Ander Sher, Peshawar, Pakistan (individual) [SDGT]

The removal of the individual's name from the list of Specially Designated Nationals and Blocked Persons is effective as of March 2, 2010. All property and interests in property of the individual that are in or hereafter come within the United States or the possession or control of United States persons are now unblocked.

Dated: March 2, 2010.

Barbara C. Hammerle,

Acting Director, Office of Foreign Assets Control.

[FR Doc. 2010–6408 Filed 3–23–10; 8:45 am]

BILLING CODE 4810–AL–P

Federal Register

Wednesday,
March 24, 2010

Part II

Environmental Protection Agency

40 CFR Part 93

Transportation Conformity Rule $PM_{2.5}$ and PM_{10} Amendments; Final Rule

ENVIRONMENTAL PROTECTION AGENCY

40 CFR Part 93

[EPA–HQ–OAR–2008–0540; FRL–9127–7]

RIN 2060–AP29

Transportation Conformity Rule $PM_{2.5}$ and PM_{10} Amendments

AGENCY: Environmental Protection Agency (EPA).

ACTION: Final rule.

SUMMARY: In this action, EPA is amending the transportation conformity rule to finalize provisions that were proposed on May 15, 2009. These amendments primarily affect conformity's implementation in $PM_{2.5}$ and PM_{10} nonattainment and maintenance areas. EPA is updating the transportation conformity regulation in light of an October 17, 2006 final rule that strengthened the 24-hour $PM_{2.5}$ national ambient air quality standard (NAAQS) and revoked the annual PM_{10} NAAQS. In addition, EPA is clarifying the regulations concerning hot-spot analyses to address a December 2007 remand from the Court of Appeals for the District of Columbia Circuit. This portion of the final rule applies to $PM_{2.5}$ and PM_{10} nonattainment and maintenance areas as well as carbon monoxide nonattainment and maintenance areas.

The Clean Air Act (CAA) requires federally supported transportation plans, transportation improvement programs, and projects to be consistent with ("conform to") the purpose of the state air quality implementation plan. The U.S. Department of Transportation (DOT) is EPA's federal partner in implementing the transportation conformity regulation. EPA has consulted with DOT, and they concur with this final rule.

DATES: This final rule is effective on April 23, 2010.

ADDRESSES: EPA has established a docket for this action under Docket ID No. EPA–HQ–OAR–2008–0540. All documents in the docket are listed on the *http://www.regulations.gov* Web site. Although listed in the index, some information is not publicly available, *e.g.,* CBI or other information whose disclosure is restricted by statute. Certain other material, such as copyrighted material, is not placed on the Internet and will be publicly available only in hard copy form. Publicly available docket materials are available either electronically through *http://www.regulations.gov* or in hard copy at the Air and Radiation Docket, EPA/DC, EPA West, Room 3334, 1301 Constitution Ave., NW., Washington, DC. The Public Reading Room is open from 8:30 a.m. to 4:30 p.m., Monday through Friday, excluding legal holidays. The telephone number for the Public Reading Room is (202) 566–1744 and the telephone number for the Air and Radiation Docket is (202) 566–1742.

FOR FURTHER INFORMATION CONTACT: Laura Berry, State Measures and Conformity Group, Transportation and Regional Programs Division, Environmental Protection Agency, 2000 Traverwood Drive, Ann Arbor, MI 48105, e-mail address: *berry.laura@epa.gov,* telephone number: (734) 214–4858, fax number: (734) 214–4052; or Patty Klavon, State Measures and Conformity Group, Transportation and Regional Programs Division, Environmental Protection Agency, 2000 Traverwood Drive, Ann Arbor, MI 48105, e-mail address: *klavon.patty@epa.gov,* telephone number: (734) 214–4476, fax number: (734) 214–4052.

SUPPLEMENTARY INFORMATION: The contents of this preamble are listed in the following outline:

I. General Information
II. Background on the Transportation Conformity Rule
III. General Overview of Transportation Conformity for the 2006 $PM_{2.5}$ NAAQS
IV. Baseline Year for Certain 2006 $PM_{2.5}$ Nonattainment Areas
V. Regional Conformity Tests in 2006 $PM_{2.5}$ Nonattainment Areas That Do Not Have Adequate or Approved SIP Budgets for the 1997 $PM_{2.5}$ NAAQS
VI. Regional Conformity Tests in 2006 $PM_{2.5}$ Areas That Have 1997 $PM_{2.5}$ SIP Budgets
VII. Other Conformity Requirements for 2006 $PM_{2.5}$ Areas
VIII. Transportation Conformity in PM_{10} Nonattainment and Maintenance Areas and the Revocation of the Annual PM_{10} NAAQS
IX. Response to the December 2007 Hot-Spot Court Decision
X. Statutory and Executive Order Reviews

I. General Information

A. Does This Action Apply to Me?

Entities potentially regulated by the conformity rule are those that adopt, approve, or fund transportation plans, programs, or projects under title 23 U.S.C. or title 49 U.S.C. Regulated categories and entities affected by today's action include:

Category	Examples of regulated entities
Local government	Local transportation and air quality agencies, including metropolitan planning organizations (MPOs).
State government	State transportation and air quality agencies.
Federal government	Department of Transportation (Federal Highway Administration (FHWA) and Federal Transit Administration (FTA)).

This table is not intended to be exhaustive, but rather provides a guide for readers regarding entities likely to be affected by this final rule. This table lists the types of entities of which EPA is aware that potentially could be regulated by the transportation conformity rule. Other types of entities not listed in the table could also be regulated. To determine whether your organization is regulated by this action, you should carefully examine the applicability requirements in 40 CFR 93.102. If you have questions regarding the applicability of this action to a particular entity, consult the persons listed in the preceding **FOR FURTHER INFORMATION CONTACT** section.

B. How Can I Get Copies of This Document?

1. Docket

EPA has established an official public docket for this action under Docket ID No. EPA–HQ–OAR–2008–0540. You can get a paper copy of this **Federal Register** document, as well as the documents specifically referenced in this action, any public comments received, and other information related to this action at the official public docket. See the **ADDRESSES** section for its location.

2. Electronic Access

You may access this **Federal Register** document electronically through EPA's Transportation Conformity Web site at *http://www.epa.gov/otaq/stateresources/transconf/index.htm.* You may also access this document electronically under the **Federal Register** listings at *http://www.epa.gov/fedrgstr/.*

An electronic version of the official public docket is available through *http://www.regulations.gov.* You may use *http://www.regulations.gov* to view public comments, access the index listing of the contents of the official

public docket, and access those documents in the public docket that are available electronically. Once in the system, select "search," then key in the appropriate docket identification number.

Certain types of information will not be placed in the electronic public docket. Information claimed as CBI and other information for which disclosure is restricted by statute is not available for public viewing in the electronic public docket. EPA's policy is that copyrighted material is not placed in the electronic public docket but is available only in printed, paper form in the official public docket.

To the extent feasible, publicly available docket materials will be made available in the electronic public docket. When a document is selected from the index list in EPA Dockets, the system will identify whether the document is available for viewing in the electronic public docket. Although not all docket materials may be available electronically, you may still access any of the publicly available docket materials through the docket facility identified in the **ADDRESSES** section. EPA intends to provide electronic access in the future to all of the publicly available docket materials through the electronic public docket.

For additional information about the electronic public docket, visit the EPA Docket Center homepage at *http://www.epa.gov/epahome/dockets.htm.*

II. Background on the Transportation Conformity Rule

A. What Is Transportation Conformity?

Transportation conformity is required under CAA section 176(c) (42 U.S.C. 7506(c)) to ensure that transportation plans, transportation improvement programs (TIPs) and federally supported highway and transit project activities are consistent with ("conform to") the purpose of the state air quality implementation plan (SIP). Conformity to the purpose of the SIP means that transportation activities will not cause new air quality violations, worsen existing violations, or delay timely attainment of the relevant national ambient air quality standards (NAAQS) or any interim milestones.[1] Transportation conformity applies to areas that are designated nonattainment, and those areas redesignated to attainment after 1990 ("maintenance areas") for transportation-related criteria pollutants: Carbon monoxide (CO), ozone, nitrogen dioxide (NO_2) and particulate matter ($PM_{2.5}$, and PM_{10}).[2]

EPA's transportation conformity rule (40 CFR Parts 51 and 93) establishes the criteria and procedures for determining whether transportation activities conform to the SIP. EPA first promulgated the transportation conformity rule on November 24, 1993 (58 FR 62188), and subsequently published several other amendments. DOT is EPA's federal partner in implementing the transportation conformity regulation. EPA has consulted with DOT, which concurs with this final rule.

A few recent amendments to the transportation conformity rule are useful background for today's final rule. In a final rule EPA published on July 1, 2004 (69 FR 40004), EPA provided conformity procedures for state and local agencies under the 1997 8-hour ozone and $PM_{2.5}$ national ambient air quality standards (NAAQS). EPA's nonattainment area designations for the 1997 8-hour ozone and $PM_{2.5}$ NAAQS were effective in June 2004 and April 2005, respectively. The July 2004 update provided rules for implementing conformity for these NAAQS. In addition, on May 6, 2005, EPA promulgated a final rule entitled, "Transportation Conformity Rule Amendments for the New $PM_{2.5}$ National Ambient Air Quality Standard: $PM_{2.5}$ Precursors" (70 FR 24280). This final rule specified transportation-related $PM_{2.5}$ precursors and when they must be considered in transportation conformity determinations in $PM_{2.5}$ nonattainment and maintenance areas.

On March 10, 2006, EPA promulgated a final rule (71 FR 12468) entitled, "$PM_{2.5}$ and PM_{10} Hot-Spot Analyses in Project-Level Transportation Conformity Determinations for the New $PM_{2.5}$ and Existing PM_{10} National Ambient Air Quality Standards." This rule established the criteria and procedures for determining which transportation projects must be analyzed for local air quality impacts—or "hot-spots"—in $PM_{2.5}$ and PM_{10} nonattainment and maintenance areas. See Section IX. of today's preamble for more information regarding the March 2006 rule; *see* EPA's Web site at *http://www.epa.gov/otaq/stateresources/transconf/index.htm* for further information about any of EPA's transportation conformity rulemakings.[3]

B. Why Are We Issuing This Final Rule?

Today's action is necessary because EPA promulgated a final rule on October 17, 2006 that changed the $PM_{2.5}$ and PM_{10} NAAQS, as described further below. Today's action provides rules for implementing conformity for these revisions to the $PM_{2.5}$ and PM_{10} NAAQS. Sections III. through VIII. describe the changes to the transportation conformity rule that are a result of the October 2006 revisions to the $PM_{2.5}$ and PM_{10} NAAQS.

Today's final rule is the second transportation conformity rulemaking undertaken primarily for the purpose of addressing a new or revised NAAQS. Due to other statutory requirements, EPA will continue to establish new or revised NAAQS in the future. Therefore, EPA may consider restructuring certain sections of the conformity rule in a future rulemaking so that existing rule requirements would clearly apply to areas designated for future new or revised NAAQS, without having to update the rule each time a new or revised NAAQS is established.

Note that in 2009, EPA issued an interim conformity guidance for areas designated nonattainment for the 2006 $PM_{2.5}$ NAAQS[4] ("2006 $PM_{2.5}$ areas").[5] EPA issued this interim guidance to help new nonattainment areas meet conformity requirements by the end of the one-year grace period. While this interim guidance is superseded by today's final rule, conformity determinations done according to the interim guidance are consistent with the CAA, and with the transportation conformity rule.[6] Therefore, conformity determinations based on the interim guidance and the transportation conformity rule in effect at the time of the conformity determination will remain valid. Conformity determinations completed on or after the effective date of this final rule must meet all the requirements in the final rule. EPA will work with the 2006 $PM_{2.5}$

[1] These requirements are found in Clean Air Act section 176(c)(B)(i), (ii), and (iii): "That such activities will not cause or contribute to any new violation of any standard in any area; increase the frequency or severity of any existing violation of any standard in any area; or delay timely attainment of any standard or any required interim emissions reductions or other milestones in any area."

[2] 40 CFR 93.102(b)(1) defines $PM_{2.5}$ and PM_{10} as particles with an aerodynamic diameter less than or equal to a nominal 2.5 and 10 micrometers, respectively.

[3] At this website, click on "Regulations" to find all of EPA's proposed and final rules as well as the current transportation conformity regulations.

[4] "2006 $PM_{2.5}$ NAAQS" refers to the 24-hour $PM_{2.5}$ NAAQS promulgated in 2006.

[5] "Interim Transportation Conformity Guidance for 2006 $PM_{2.5}$ Nonattainment Areas," EPA–420–B–09–036, November 2009, available on EPA's Web site at: *http://www.epa.gov/otaq/stateresources/transconf/policy/420b09036.pdf.*

[6] Today's final rule changes the baseline year used to demonstrate conformity for the 2006 $PM_{2.5}$ NAAQS prior to having an adequate or approved $PM_{2.5}$ SIP budget; the interim guidance addressed this change. Refer to Section IV. for further discussion of the baseline year for conformity purposes.

areas to ensure they can meet conformity requirements on time.

Today's final rule also responds to a court decision regarding the March 2006 hot-spot rulemaking. Section IX. of this preamble describes the issue, the court's decision, and EPA's response.

III. General Overview of Transportation Conformity for the 2006 $PM_{2.5}$ NAAQS

A. Background on 2006 $PM_{2.5}$ NAAQS Development

EPA issued a final rule on October 17, 2006, effective December 18, 2006, that strengthened the 24-hour $PM_{2.5}$ NAAQS and revoked the annual PM_{10} NAAQS (71 FR 61144). In that final rule, EPA strengthened the 24-hour $PM_{2.5}$ NAAQS from the 1997 level of 65 micrograms per cubic meter (μg/m³) (average of 98th percentile values for three consecutive years) to 35 μg/m³, while the level of the annual $PM_{2.5}$ NAAQS remained unchanged at 15.0 μg/m³ (average of three consecutive annual average values). EPA selected levels for the final NAAQS after completing an extensive review of thousands of scientific studies on the impact of fine and coarse particles on public health and welfare. For additional information about the October 17, 2006 rulemaking, the final rule and EPA outreach materials can be found at: *http://www.epa.gov/pmdesignations/*.

The October 2006 rule establishing the 2006 $PM_{2.5}$ NAAQS did not revoke the 1997 annual or 24-hour $PM_{2.5}$ NAAQS. See Section III.D. below for details on how today's final rule interacts with conformity requirements for those areas designated nonattainment for the 1997 $PM_{2.5}$ NAAQS.[7]

EPA signed the final rule designating areas for the 2006 $PM_{2.5}$ NAAQS on October 8, 2009.[8] This final rule was published in the **Federal Register** on November 13, 2009, and became effective December 14, 2009. The designations for the 2006 $PM_{2.5}$ NAAQS are separate from the existing designations for the 1997 $PM_{2.5}$ NAAQS.

However, in the final rule designating areas for the 2006 $PM_{2.5}$ NAAQS, EPA has also clarified that all 39 areas designated nonattainment for the 1997 $PM_{2.5}$ NAAQS were violating the annual $PM_{2.5}$ NAAQS, and two of those were also violating the 24-hour $PM_{2.5}$ NAAQS.[9] That is, EPA's designations rule clarifies that only two areas were designated nonattainment for the 1997 24-hour $PM_{2.5}$ NAAQS, and that all 39 nonattainment areas were designated nonattainment for the 1997 annual $PM_{2.5}$ NAAQS.

Transportation conformity applies for the NAAQS for which an area is designated nonattainment.[10] Therefore, in two of the 1997 $PM_{2.5}$ areas, conformity applies for both the 1997 annual and 24-hour NAAQS. In the other 37 1997 $PM_{2.5}$ areas, conformity applies for the 1997 annual NAAQS, and not the 1997 24-hour $PM_{2.5}$ NAAQS.

Refer to EPA's Web site at: *http://www.epa.gov/pmdesignations/2006standards/index.htm* for additional information about the nonattainment designations.

B. When Does Conformity Apply for the 2006 $PM_{2.5}$ NAAQS?

Transportation conformity for the 2006 $PM_{2.5}$ NAAQS does not apply until December 14, 2010, which is one year after the effective date of nonattainment designations for this NAAQS. CAA section 176(c)(6) and 40 CFR 93.102(d) provide a one-year grace period from the effective date of designations before transportation conformity applies in areas newly designated nonattainment for a particular NAAQS.[11]

The following discussion provides more details on the application of the one-year grace period in different types of newly designated nonattainment areas for the 2006 $PM_{2.5}$ NAAQS. This information is consistent with how conformity for new NAAQS has been implemented in the past.[12] The conformity grace period will be available to all newly designated nonattainment areas for the 2006 $PM_{2.5}$ NAAQS.

Metropolitan areas are urbanized areas that have a population greater than 50,000 and a designated metropolitan planning organization (MPO) responsible for transportation planning per 23 U.S.C. 134. Within one year after the effective date of the initial nonattainment designation for the 2006 $PM_{2.5}$ NAAQS, a conformity determination for this NAAQS must be made by the MPO and DOT for the MPO's transportation plan and TIP. MPOs must continue to meet conformity requirements for any other applicable NAAQS, including the 1997 $PM_{2.5}$ NAAQS, if the area is designated nonattainment or maintenance for such NAAQS as well.

In nonattainment and maintenance areas with a donut portion,[13] adjacent MPOs must meet conformity requirements for the 2006 $PM_{2.5}$ NAAQS. The MPO must also continue to ensure that conformity is met for any other applicable NAAQS, including any 1997 $PM_{2.5}$ NAAQS for which the donut area is designated nonattainment.[14] The interagency consultation partners for each newly designated nonattainment area that includes a donut portion should determine how best to consider the donut area transportation system and new donut area projects in the MPO's regional emissions analyses and transportation plan and TIP conformity determinations.

If, at the end of the one-year grace period, the MPO and DOT have not made a transportation plan and TIP conformity determination for the 2006 $PM_{2.5}$ NAAQS, the entire area, including any donut area, would be in a conformity "lapse."[15] During a

[7] "1997 $PM_{2.5}$ NAAQS" includes both the annual and the 24-hour 1997 $PM_{2.5}$ NAAQS unless noted otherwise.

[8] A **Federal Register** notice designating areas for the 2006 $PM_{2.5}$ NAAQS had been signed in late December 2008 by then-Administrator Johnson, where the designations were based on air quality data from 2005–2007. The December 2008 notice was awaiting publication in January 2009 when the newly elected Administration identified the notice as one that should receive additional review before publication. However, this notice was never published in the **Federal Register** and, therefore, designations were not officially promulgated. CAA section 107(d)(2)(A) requires EPA to publish the notice in the **Federal Register** in order to promulgate designations. Since January 2009, monitoring data for 2008 has become available for areas across the U.S. Therefore, the final designations in the final rule signed by Administrator Jackson on October 8, 2009 are based on air quality monitoring data from Federal Reference Method monitors for calendar years 2006–2008.

[9] The two areas designated as nonattainment for both the annual and 24-hour 1997 $PM_{2.5}$ NAAQS are the Los Angeles-South Coast Air Basin, CA nonattainment area and the San Joaquin Valley, CA nonattainment area.

[10] Clean Air Act section 176(c)(5) and 40 CFR 93.102(b).

[11] EPA began the process of notifying state and local agencies, via the EPA regional offices, of the timing of conformity under the 2006 $PM_{2.5}$ NAAQS in its April 16, 2007 memorandum entitled, "Transportation Conformity and the Revised 24-hour $PM_{2.5}$ Standard," from Merrylin Zaw-Mon, Director, Transportation and Regional Programs Division, EPA Office of Transportation and Air Quality, to EPA Regional Air Directors, Regions I–X.

[12] See EPA's July 1, 2004 final rule for further background on how EPA has implemented this conformity grace period for the 1997 $PM_{2.5}$ NAAQS (69 FR 40004).

[13] For the purposes of transportation conformity, a "donut" area is the geographic area outside a metropolitan planning area boundary, but inside a designated nonattainment or maintenance area boundary that includes an MPO (40 CFR 93.101). For more discussion on how conformity determinations should be made for donut areas, see the preamble to the July 1, 2004 conformity rule (69 FR 40013).

[14] Determining conformity for these other NAAQS during the one-year grace period is not necessary unless required by 40 CFR 93.104 (for example, a new or amended transportation plan and TIP are to be adopted).

[15] The lapse grace period provision in CAA section 176(c)(9) does not apply to the deadline for newly designated nonattainment areas to make the initial transportation plan/TIP conformity determination within 12 months of the effective

conformity lapse, only certain projects can receive additional federal funding or approvals to proceed (*e.g.* exempt projects, project phases that were approved before the lapse).[16] The practical impact of a conformity lapse will vary on an area-by-area basis.

The one-year grace period for conformity also applies to project-level conformity determinations (including hot-spot analyses in certain cases) in newly designated 2006 $PM_{2.5}$ nonattainment areas. At the end of the one-year grace period for conformity, requirements for project-level conformity determinations must be met for the 2006 $PM_{2.5}$ NAAQS (including hot-spot analyses in certain cases) before any new federal approvals for such projects can occur. See Table 1 in 40 CFR 93.109 for the conformity criteria that apply for project-level conformity determinations.

Isolated rural nonattainment and maintenance areas are areas that do not contain or are not part of any metropolitan planning area as designated by 23 U.S.C. 134 and 49 U.S.C. 5303 (40 CFR 93.101). As in other newly designated nonattainment areas, the one-year conformity grace period for the 2006 $PM_{2.5}$ NAAQS will begin on the effective date of an isolated rural area's initial nonattainment designation. However, because these areas do not have federally required metropolitan transportation plans and TIPs, they are not subject to the frequency requirements for conformity determinations on transportation plans and TIPs (40 CFR 93.104(b),(c), and (e)). Instead, conformity determinations in isolated rural areas are required only when a non-exempt FHWA/FTA project(s) needs approval.

Therefore, although the one-year conformity grace period is available to isolated rural areas, most likely no conformity consequences would occur upon the expiration date of the one-year grace period because these areas most likely would not have any projects that require federal funding or approval at that time. Once the conformity grace period has expired, a conformity determination would only be required in such areas when a non-exempt FHWA/FTA project needs approval. Conformity requirements for isolated rural areas can be found at 40 CFR 93.109(n).[17]

Response to comments about the grace period. Some commenters believed that the one-year grace period would not allow enough time for some areas to meet the conformity requirements. These same commenters questioned whether a year would be enough time to adequately prepare attainment SIPs, learn EPA's new emissions factor model (called the Motor Vehicle Emissions Simulator, or MOVES model) when final, and complete their conformity determinations. To address these concerns, these commenters suggested lengthening the conformity grace period for newly designated nonattainment areas from one to two years.

EPA understands that some areas, such as areas that have never done conformity before and multi-jurisdictional nonattainment areas (*e.g.,* areas with multiple states and/or multiple MPOs) may have additional challenges in conducting their initial conformity determinations. However, the CAA as amended on October 27, 2000 specifically provides newly designated nonattainment areas with only a one-year grace period, after which conformity applies as a matter of law under the statute. Therefore, we believe that the statutory language precludes EPA from extending the conformity grace period beyond one year for new nonattainment areas.

In accordance with the CAA, states were initially required to submit their recommendations for nonattainment areas based on monitored data by December 18, 2007, well before designations became effective.[18] Additionally, EPA began the process of notifying state and local agencies, via the EPA regional offices, of the timing of conformity under the 2006 $PM_{2.5}$ NAAQS in the April 16, 2007 memorandum cited earlier.[19] As mentioned, EPA provided interim guidance for the 2006 $PM_{2.5}$ areas to assist in meeting conformity requirements by the end of the one-year grace period. Finally, EPA will be working with 2006 $PM_{2.5}$ areas to provide technical assistance in an expeditious manner, such as helping each area determine which test applies for the first 2006 $PM_{2.5}$ conformity determination.

We also want to clarify that while areas will have to complete a conformity determination for their transportation plans and TIPs within one year, they are not required to complete their attainment demonstration SIPs for the 2006 $PM_{2.5}$ NAAQS in that same time period as the commenter suggested. Instead, they will have three years from the effective date of designations to submit their attainment demonstrations, per CAA section 172(b).

Also, implementers will have additional time before MOVES is required for conformity determinations, as a different grace period will apply for MOVES once it is released. The conformity rule at 40 CFR 93.111 provides a grace period before a new emissions model is required for conformity. This grace period can be anywhere from three months to two years depending on the degree of change from one model to another (40 CFR 93.111(b)(2)); EPA is intending to provide the maximum length two-year grace period for the transition to MOVES. Therefore, MOVES will not be required for the first transportation plan and TIP conformity determination done for the 2006 $PM_{2.5}$ NAAQS. EPA will provide specific guidance regarding the MOVES grace period and when MOVES will be required to be used for SIPs and conformity. This guidance will be available on EPA's Web site at: *http://www.epa.gov/otaq/stateresources/transconf/policy.htm#models.*

EPA and DOT understand the concern that the commenter notes with respect to learning the new MOVES model, and therefore have devoted significant staff time and resources to training state and local air quality and transportation planners in using MOVES. During 2009, 20 MOVES training sessions were held at locations across the U.S. Once MOVES is final, EPA intends to offer web-based training, and EPA and DOT are planning to hold additional in-person training sessions as well. See EPA's Web site: *http://www.epa.gov/*

date of the nonattainment designation. For additional details on the conformity lapse grace period, see the preamble to the January 24, 2008 conformity rule (73 FR 4423–4425).

[16] For additional information on projects that can proceed during a conformity lapse, refer to the final rule of July 1, 2004 (69 FR 40005–40006), which addressed the March 2, 1999 U.S. Court of Appeals decision that affected related provisions of the conformity rule (*Environmental Defense Fund* v. *EPA,* 167 F.3d 641 (D.C. Cir. 1999). See also the following guidance memoranda that address this court decision: DOT's January 2, 2002 guidance, published in the **Federal Register** on February 7, 2002 (67 FR 5882); DOT's May 20, 2003 and FTA's April 9, 2003 supplemental guidance documents; and, EPA's May 14, 1999 guidance memorandum.

[17] Prior to today's rulemaking, the requirements for isolated rural areas were found at § 93.109(l). This section has been renamed as § 93.109(n), as a result of other revisions and additions in this regulatory section. This is merely an administrative change and the conformity requirements for isolated rural areas remain unchanged.

[18] Information on 2006 $PM_{2.5}$ nonattainment designations, including copies of EPA's designation letters, can be accessed from EPA's Web site at *http://www.epa.gov/pmdesignations/2006standards/state.htm.*

[19] Memorandum entitled, "Transportation Conformity and the Revised 24-hour $PM_{2.5}$ Standard," from Merrylin Zaw-Mon, then-Director, Transportation and Regional Programs Division, EPA Office of Transportation and Air Quality, to EPA Regional Air Directors, Regions I– X, found on EPA's Web site at: *http://www.epa.gov/otaq/stateresources/transconf/generalinfo/rev24hr-pm25.pdf.*

otaq/models/moves/trainingsessions.htm for information about upcoming training sessions. Also note that other MOVES related guidance, including user guides and other technical information is available on EPA's Web site at: *http://www.epa.gov/otaq/models/moves/index.htm* and *http://www.epa.gov/otaq/stateresources/transconf/policy.htm*

C. Definitions for $PM_{2.5}$ NAAQS

EPA is adding two new definitions to § 93.101 of the conformity rule to distinguish between the 1997 $PM_{2.5}$ NAAQS and the 2006 $PM_{2.5}$ NAAQS. These definitions will help implement certain conformity requirements in areas that have been designated nonattainment for 1997 $PM_{2.5}$ NAAQS and/or 2006 $PM_{2.5}$ NAAQS. Some areas designated nonattainment for the 2006 $PM_{2.5}$ NAAQS also are designated nonattainment for the 1997 $PM_{2.5}$ NAAQS. In addition, some areas are designated for only the 2006 $PM_{2.5}$ NAAQS.

These definitions are similar to the rule's definitions in 40 CFR 93.101 for the 1-hour ozone NAAQS and 8-hour ozone NAAQS, and are generally consistent with how EPA is defining both kinds of $PM_{2.5}$ areas for air quality planning purposes. EPA also notes that any provision of the conformity rule that references only "$PM_{2.5}$" and does not specify which $PM_{2.5}$ NAAQS applies to any area designated nonattainment for a $PM_{2.5}$ NAAQS. EPA received no comments regarding these definitions.

D. How Does This Final Rule Interact With Conformity Requirements for the 1997 $PM_{2.5}$ NAAQS?

Sections IV. through VI. of today's final rule describe conformity requirements for areas designated nonattainment for the 2006 $PM_{2.5}$ NAAQS. No changes have been made to the existing transportation conformity requirements for areas designated nonattainment for the 1997 $PM_{2.5}$ NAAQS.

Nonattainment designations for the 1997 and 2006 $PM_{2.5}$ NAAQS are different designations with separate SIP requirements, different attainment dates, etc. As a result, CAA section 176(c)(5) requires conformity requirements to be met in both 1997 and 2006 $PM_{2.5}$ nonattainment and maintenance areas, as applicable.

Some areas designated nonattainment for the 2006 $PM_{2.5}$ NAAQS have never been subject to $PM_{2.5}$ conformity requirements. Under today's final rule and CAA section 176(c)(5), these areas must meet conformity requirements only for the 2006 $PM_{2.5}$ NAAQS, and not for the 1997 $PM_{2.5}$ NAAQS, because these areas are not designated nonattainment for the 1997 $PM_{2.5}$ NAAQS.

Other areas designated nonattainment for the 2006 $PM_{2.5}$ NAAQS have been designated also, in whole or in part, for the 1997 $PM_{2.5}$ NAAQS. (*See* Section III.A. for the clarification that EPA has made in designations for the 1997 $PM_{2.5}$ NAAQS areas.) These areas must continue to meet their existing conformity requirements for the 1997 $PM_{2.5}$ NAAQS as well as those that apply for the 2006 $PM_{2.5}$ NAAQS.

One commenter was concerned that, given identical boundaries, an area could potentially be required to prepare conformity determinations for three different PM NAAQS (*i.e.,* the 24-hr PM_{10} NAAQS, 1997 $PM_{2.5}$ NAAQS, and 2006 $PM_{2.5}$ NAAQS), and believed that this could mean three separate analyses would be required. This commenter recommended that an area should only have to model to the most restrictive NAAQS.

As described in the May 2009 proposal, nonattainment designations for these NAAQS are different designations with separate SIP requirements, different attainment dates, etc. As a result, CAA section 176(c)(5) requires conformity to be met for all of the NAAQS for which an area has been designated. However, MPOs subject to more than one PM NAAQS will be able to use existing transportation models and data for regional emissions analyses, especially where nonattainment area boundaries are the same. Some analysis years for the regional emissions analyses will be the same, such as the last year of the transportation plan. In addition, MPOs in areas designated for more than one PM NAAQS will be able to meet consultation and other conformity requirements through the existing processes.

Furthermore, if an area is designated nonattainment for both the 1997 and 2006 $PM_{2.5}$ NAAQS and it has no adequate or approved $PM_{2.5}$ budgets, it could use the same interim emissions test for both NAAQS (*see* Section V.; note that the baseline year for these two NAAQS are different, *see* Section IV.) If such an area has budgets only for the 1997 $PM_{2.5}$ NAAQS, conformity determinations for the 2006 $PM_{2.5}$ NAAQS will be based on the same conformity test—*i.e.,* the budget test—that is being used for the 1997 $PM_{2.5}$ NAAQS (note that the attainment year for each of these NAAQS, which is a required analysis year for the budget test, will differ). As described in Section VI., MPOs must use any adequate or approved SIP budgets for the 1997 $PM_{2.5}$ NAAQS for conformity determinations that are made prior to SIP budgets for the 2006 $PM_{2.5}$ NAAQS being found adequate or approved.

Today's final rule does not impact project-level conformity requirements for the 1997 $PM_{2.5}$ NAAQS. For example, this rule does not substantively change the $PM_{2.5}$ hot-spot analysis requirements, and EPA and FHWA's existing qualitative guidance for such analyses continues to be available.[20] For the purposes of $PM_{2.5}$ conformity, a hot-spot analysis must address the $PM_{2.5}$ NAAQS for which the area has been designated nonattainment.[21] See Section VII. for further information regarding project-level conformity requirements for the 2006 $PM_{2.5}$ NAAQS.

EPA will work with $PM_{2.5}$ nonattainment areas as needed to ensure that state and local agencies can meet conformity requirements for both the applicable 1997 and 2006 $PM_{2.5}$ NAAQS in a timely and efficient manner.

E. Precursors That Apply for 2006 $PM_{2.5}$ Conformity

The existing transportation conformity rule at 40 CFR 93.102(b) describes the pollutants and precursors that must be examined in a regional emissions analysis in $PM_{2.5}$ areas, and these provisions apply to 2006 $PM_{2.5}$ areas as well as 1997 $PM_{2.5}$ areas. Direct $PM_{2.5}$ must be analyzed per 40 CFR 93.102(b)(1). Before SIP budgets are adequate or approved, NO_X must also be analyzed, unless both EPA and the state air quality agency find that transportation-related emissions of NO_X are not a significant contributor to the $PM_{2.5}$ nonattainment problem and notify the MPO and DOT (40 CFR 93.102(b)(iv)).[22] Before SIP budgets are adequate or approved, VOCs, sulfur dioxide, and ammonia do not have to be analyzed unless either EPA or the state air quality agency finds that such a precursor is a significant contributor, and notifies the MPO and DOT (40 CFR 93.102(b)(v)). Similarly, before SIP budgets are adequate or approved, road dust does not have to be included in the regional emission analysis of directly

[20] "Transportation Conformity Guidance for Qualitative Hot-spot Analyses in $PM_{2.5}$ and PM_{10} Nonattainment and Maintenance Areas," EPA420–B–06–902, March 2006.

[21] EPA notes that today's final rule does not address project requirements for the National Environmental Policy Act or other environmental programs.

[22] Note that instead of establishing a budget for direct $PM_{2.5}$ or NO_X, a SIP could demonstrate that the pollutant or precursor is insignificant based on 40 CFR 93.109(k).

emitted $PM_{2.5}$ unless EPA or the state air agency find that re-entrained road dust emissions are a significant contributor, and notifies the MPO and DOT (40 CFR 93.102(b)(3)).

Once budgets from a submitted $PM_{2.5}$ SIP have been found adequate or approved, a conformity determination for the 2006 $PM_{2.5}$ NAAQS must include any precursors for which budgets are established (40 CFR 93.102(b)(iv) and (v)). If road dust is included in the direct $PM_{2.5}$ budget, it must also be included in a regional emissions analysis (40 CFR 93.102(b)(3)).

Please use the interagency consultation process if there are questions regarding whether a regional emissions analysis for the 2006 $PM_{2.5}$ NAAQS must include specific precursors or road dust.

IV. Baseline Year for Certain 2006 $PM_{2.5}$ Nonattainment Areas

A. Background

Conformity determinations for transportation plans, TIPs, and projects not from a conforming transportation plan and TIP must include a regional emissions analysis that fulfills CAA provisions. The conformity rule provides for several different regional emissions analysis tests that satisfy CAA requirements in different situations. Once a SIP with a motor vehicle emissions budget ("budget") is submitted for an air quality NAAQS and EPA finds the budget adequate for conformity purposes or approves it as part of the SIP, conformity is demonstrated using the budget test for that pollutant or precursor, as described in 40 CFR 93.118.

Before an adequate or approved SIP budget is available, conformity of the transportation plan, TIP, or project not from a conforming transportation plan and TIP is demonstrated using the interim emissions test(s), as described in 40 CFR 93.119. The interim emissions tests include different forms of the "build/no-build" test and "baseline year" test. In general, for the baseline year test, emissions from the planned transportation system are compared to emissions that occurred in the baseline year. Today's rule updates section 93.119 of the conformity rule for the 2006 $PM_{2.5}$ NAAQS. The baseline year for nonattainment areas under the 1997 $PM_{2.5}$ NAAQS is 2002 (40 CFR 93.119(e)(2)). Sections V. and VI. of today's final rule go into further detail about how the baseline year will be applied in 2006 $PM_{2.5}$ areas.

B. Baseline Year for 2006 $PM_{2.5}$ Areas

1. Description of Final Rule

In today's final rule, EPA is defining the baseline year as the most recent year for which EPA's Air Emissions Reporting Requirements (AERR) (40 CFR Part 51) requires submission of on-road mobile source emissions inventories,[23] as of the effective date of EPA's nonattainment designations for any $PM_{2.5}$ NAAQS other than the 1997 $PM_{2.5}$ NAAQS. EPA had proposed this definition under "Option 2" in the proposed rule. AERR requires on-road mobile source emission inventories to be submitted every three years, for example, 2002, 2005, 2008, 2011, etc. *See* § 93.119(e)(2)(B) for the regulatory text.

Today's final rule results in a baseline year of 2008 for the 2006 $PM_{2.5}$ areas. The year 2008 is the most recent year as of the effective date of the 2006 $PM_{2.5}$ designations, December 14, 2009, for which AERR requires submission of on-road mobile source emissions inventories. In other words, the designations were effective on December 14, 2009, and the most recent year for which an on-road mobile source inventory was required as of that date was 2008. Therefore, 2008 is the baseline year for 2006 $PM_{2.5}$ areas.

This final rule would also govern the baseline year for conformity purposes for any areas designated for a $PM_{2.5}$ NAAQS that EPA promulgates in the future. EPA will clarify the relevant baseline year under today's regulation for each such future NAAQS for conformity implementers in guidance and maintain a list of baseline years that result from today's final rule on EPA's Web site.[24]

Today's action does not change the 2002 baseline year for areas designated nonattainment for the 1997 $PM_{2.5}$ NAAQS and the conformity rule now clarifies that 2002 applies as the baseline year only to areas designated nonattainment for the 1997 $PM_{2.5}$ NAAQS. The baseline year for 1997 $PM_{2.5}$ NAAQS areas is found in § 93.119(e)(2)(A).

The existing interagency consultation process (40 CFR 93.105(c)(1)(i)) must be used to determine the latest assumptions and models for generating baseline year motor vehicle emissions to complete any baseline year test. The baseline year emissions level that is used in conformity must be based on the latest planning assumptions available, the latest emissions model, and appropriate methods for estimating travel and speeds as required by 40 CFR 93.110, 93.111, and 93.122 of the current conformity rule. The baseline year test can be completed with a submitted or draft baseline year motor vehicle emissions SIP inventory, if the SIP reflects the latest information and models. If such a SIP baseline is not available, an MPO, in consultation with state and local air agencies, could also develop baseline year emissions as part of the conformity analysis.

2. Rationale and Response to Comments

General overview. EPA believes that today's definition for the baseline year results in an environmentally protective and legal baseline year for conformity under the 2006 $PM_{2.5}$ NAAQS and any future $PM_{2.5}$ NAAQS revisions, and best accomplishes several important goals.

First, as EPA discussed in the preamble to the proposed rule, EPA believes that a more recent year than 2002 (the baseline year for 1997 $PM_{2.5}$ areas) is appropriate for meeting CAA conformity requirements for 2006 $PM_{2.5}$ nonattainment areas. EPA also believes that using a more recent year is more environmentally protective than 2002, and more relevant for the 2006 $PM_{2.5}$ NAAQS. Several commenters agreed with these points. Because the AERR requires submission of inventories every three years, today's final rule results in a baseline year that is recent for any $PM_{2.5}$ NAAQS established after 1997. The baseline year will always be either the same year as the year in which designations are effective, or one or two years prior to the effective date of designations. For example, in the case of the 2006 $PM_{2.5}$ NAAQS, the baseline year, 2008, is the year before the year in which designations are effective, 2009.

EPA had also proposed 2005 as a baseline year as it is also more recent than 2002. One commenter preferred a 2005 baseline year because the introduction of Tier 2 and improved fuel and engine technologies since then would allow transportation plans and TIPs to meet conformity more easily. However, because of the implementation of EPA's Tier 2 Vehicle and Gasoline Program as well as other federal programs, motor vehicle emissions in the year 2005 were higher than emissions in the year 2008. Thus today's rule, which results in a baseline year of 2008, provides more protection for the environment than would a baseline year of 2005, in the time before an area has adequate or approved motor vehicle emissions budgets from a SIP that addresses $PM_{2.5}$.

Second, today's baseline year definition coordinates the conformity

[23] 40 CFR 51.30(b).

[24] See *http://www.epa.gov/otaq/stateresources/transconf/index.htm.*

baseline year with other air quality planning requirements, which allows state and local governments to use their resources more efficiently. Coordinating the conformity baseline year with the year used for SIP planning and an emission inventory year was EPA's rationale for using 2002 as the baseline year for conformity tests in existing $PM_{2.5}$ nonattainment areas for the 1997 NAAQS. Today's regulatory text results in a conformity baseline year that is consistent with emission inventory requirements, and most likely will be consistent with the baseline year used for SIP planning as well. Several commenters voiced support for coordinating the conformity baseline year with these other air quality planning requirements.

Third, today's final rule provides transportation planners with knowledge of the baseline year for any future $PM_{2.5}$ NAAQS upon the effective date of designations for that NAAQS, without having to wait either for EPA to amend the transportation conformity rule or select a SIP planning baseline year. As a result, MPOs and other transportation planners would understand conformity requirements for future $PM_{2.5}$ NAAQS revisions more quickly, which may, in turn, also allow more time to prepare and complete necessary conformity determinations. Several commenters agreed that not having to wait for a rule revision would be a benefit of defining the baseline year as in today's rule, rather than choosing a specific year. Some commenters preferred defining the baseline year in terms of the year used as the baseline year for SIP planning. Today's final rule addresses these concerns since it will most likely result in a conformity baseline year that is consistent with the SIP baseline year, and in the future will give transportation planners the advantage of knowing the baseline year at the beginning of the grace period for newly designated areas.

Last, given that the CAA requires EPA to review the NAAQS for possible revision once every five years, today's baseline year provision potentially reduces the need for future rule revisions for any future $PM_{2.5}$ NAAQS.

While today's final rule establishes a baseline year for any $PM_{2.5}$ NAAQS other than the 1997 $PM_{2.5}$ NAAQS, the same rationale would apply for establishing the same type of baseline year definition for any future new or revised NAAQS of a transportation-related criteria pollutant. Therefore, EPA may amend the rule in the future to apply the baseline year language found in today's § 93.119(e)(2)(B) more generally. However, EPA did not propose such an amendment, and intends to solicit and consider public comment before it would adopt any such provision.

Specific comments. EPA is responding today to several comments regarding the baseline year. A couple of commenters indicated that they thought proposed Option 2 would create a "rolling" baseline year, that is, one that would be updated every three years. One commenter did not support such a rolling baseline; another did support it as long as motor vehicle emissions in an inventory year were less than the prior reporting year. However, today's final rule does not establish a rolling baseline year for any $PM_{2.5}$ NAAQS. It establishes a single baseline year for each $PM_{2.5}$ NAAQS that does not change over time. For example, for the 2006 $PM_{2.5}$ NAAQS, the definition results in a baseline year of 2008. The year 2008 will remain the baseline year for 2006 $PM_{2.5}$ areas until it's no longer needed, i.e., until adequate or approved budgets are available in a given area.

One commenter who supported the option finalized in today's rule expressed concern that final emissions data would not be available for 2008 for some time. However, if a final AERR inventory for 2008 is not available in a particular area, there are other options for generating the motor vehicle emissions in the baseline year, discussed above under "IV.B.1. Description of Final Rule."

Another commenter expressed concern that MOVES would not be available in time for the year 2008 for the first conformity determination for the 2006 $PM_{2.5}$ NAAQS. At this time, the current emissions model, MOBILE6.2, applies for conformity in all areas except California, where EMFAC2007 applies. Therefore, if the MOVES model is not available to generate a 2008 baseline estimate for use in conformity, the MOBILE6.2 model must be used. Once MOVES is available, areas can create a new baseline emissions estimate for use in conformity using MOVES along with other interim analysis years. EPA will provide a policy guidance document for using MOVES in conformity determinations that will include more details about when MOVES must be used. When available, this guidance will be found on EPA's Web site at: *http://www.epa.gov/otaq/stateresources/transconf/policy.htm#models.* For more information on MOVES, please see EPA's Web site at: *http://www.epa.gov/otaq/models/moves/index.htm.*

One commenter thought that the baseline year should be determined through interagency consultation. This was not a proposed option. However, EPA believes that details for the baseline year test must be determined through rulemaking, as EPA has done for other NAAQS since 1993. Today's rule better accomplishes the purposes of meeting the CAA's requirements, coordinating with SIP and inventory planning, and providing certainty to transportation planners. Furthermore, today's rule ensures consistency across the nation, whereas allowing each area to determine its own baseline year through interagency consultation could result in different baseline years in different areas.

V. Regional Conformity Tests in 2006 $PM_{2.5}$ Nonattainment Areas That Do Not Have Adequate or Approved SIP Budgets for the 1997 $PM_{2.5}$ NAAQS

This section of the preamble discusses regional conformity tests for nonattainment areas for the 2006 $PM_{2.5}$ NAAQS that do not have adequate or approved $PM_{2.5}$ SIP budgets for the 1997 NAAQS. This part of the final rule applies to 2006 $PM_{2.5}$ nonattainment areas that were not covered by the 1997 $PM_{2.5}$ NAAQS, as well as nonattainment areas for both $PM_{2.5}$ NAAQS that do not have an adequate or approved 1997 $PM_{2.5}$ SIP budget. EPA has addressed conformity tests for these areas under section 93.109(j) of the conformity rule. See Section VI. of today's final rule for conformity tests in 2006 $PM_{2.5}$ areas that have adequate or approved SIP budgets for the 1997 $PM_{2.5}$ NAAQS.

Note that the rule finalizes new requirements for conformity only under the 2006 $PM_{2.5}$ NAAQS. Today's final rule does not address or change the requirements for demonstrating conformity for the 1997 $PM_{2.5}$ NAAQS.

A. Conformity After 2006 $PM_{2.5}$ SIP Budgets Are Adequate or Approved

1. Description of Final Rule

Once a SIP for the 2006 $PM_{2.5}$ NAAQS is submitted with a budget(s) that EPA has found adequate or approved, the budget test must be used in accordance with 40 CFR 93.118 to complete all applicable regional emissions analyses for the 2006 $PM_{2.5}$ NAAQS. This requirement is found at § 93.109(j)(2). Conformity is demonstrated if the transportation system emissions reflecting the proposed transportation plan, TIP, or project not from a conforming transportation plan and TIP are less than or equal to the motor vehicle emissions budget level defined by the SIP as being consistent with CAA requirements.

The first SIP for the 2006 $PM_{2.5}$ NAAQS could be a control strategy SIP

required by the CAA (*i.e.,* reasonable further progress SIP or attainment demonstration) or a maintenance plan. States could also voluntarily choose to submit an "early progress SIP" prior to required SIP submissions. Early progress SIPs must demonstrate a significant level of future emissions reductions from a previous year's emissions. For example, an area could submit an early progress SIP for the 2006 $PM_{2.5}$ NAAQS that demonstrates a specific percentage of emissions reductions (*e.g.* 5–10%) in an area's attainment year from the baseline year emissions (*e.g.,* 2008). An early progress SIP would include emissions inventories for all emissions sources for the entire 2006 $PM_{2.5}$ nonattainment area and would meet applicable requirements for reasonable further progress SIPs. EPA has discussed this option in past conformity rule preambles, *e.g.* the July 1, 2004 transportation conformity final rule (69 FR 40028), and many states have established early progress SIP budgets for conformity purposes.

Whatever the case, the interim emissions test(s) would no longer be used for direct $PM_{2.5}$ or a relevant precursor once an adequate or approved SIP budget for the 2006 $PM_{2.5}$ NAAQS is established and effective for the pollutant or precursor. States are required to develop their future 2006 $PM_{2.5}$ SIPs in consultation with MPOs, state and local transportation agencies, and local air quality agencies in an effort to facilitate future conformity determinations. EPA Regions will be available to assist states in the development of early progress SIPs for the 2006 $PM_{2.5}$ NAAQS, if desired.

2. Rationale and Response to Comments

EPA believes that this provision meets statutory requirements for conformity determinations that occur after SIP budgets are available for the 2006 $PM_{2.5}$ NAAQS. Section 176(c) of the CAA states that transportation activities must "conform to an implementation plan…" (SIP) and states further that conformity to an implementation plan means conformity to the SIP's purpose. Once EPA finds a budget for the 2006 $PM_{2.5}$ NAAQS adequate or approves the SIP that includes it, the budget test provides the best means to determine whether transportation plans and TIPs meet the statutory obligations in CAA sections 176(c)(1)(A) and (B) for that NAAQS. That is, the budget test best shows that transportation plans and TIPs conform to the SIP's purpose of eliminating or reducing the severity and number of violations of the NAAQS and achieving expeditious attainment of the NAAQS (176(c)(1)(A)); and best confirms the requirement that transportation plans and TIPs not cause or contribute to any new violation, worsen an existing violation, or delay timely attainment or any interim milestones (176(c)(1)(B)). The budget test also best demonstrates that transportation plans and TIPs comply with the statutory obligation to be consistent with the emissions estimates in SIPs, according to CAA section 176(c)(2)(A). By being consistent with the on-road mobile source emissions levels in the SIP, transportation planners can ensure that their activities remain consistent with state and local air quality goals to protect public health. EPA received no comments on this aspect of today's rule.

B. Conformity Before 2006 $PM_{2.5}$ SIP Budgets Are Adequate or Approved

1. Description of Final Rule

The 2006 $PM_{2.5}$ nonattainment areas that do not have existing adequate or approved $PM_{2.5}$ budgets for the 1997 $PM_{2.5}$ NAAQS must meet one of the following interim emissions tests for conformity determinations conducted before adequate or approved 2006 24-hour $PM_{2.5}$ SIP budgets are established:

- The build-no-greater-than-no-build test ("build/no-build test"), or
- The no-greater-than-baseline year emissions test ("baseline year test").

This aspect of today's final rule is similar to the transportation conformity rule at 40 CFR 93.119(e) for nonattainment areas for the 1997 $PM_{2.5}$ NAAQS. Today's final rule allows 2006 $PM_{2.5}$ nonattainment areas without SIP budgets to choose between the two interim emissions tests, rather than require that one specific test or both tests be completed. Conformity is demonstrated if, for each analysis year, the transportation emissions reflecting the proposed transportation plan or TIP (build) are less than or equal to either the emissions from the existing transportation system (no-build), or the level of motor vehicle emissions in the baseline year, as described in 40 CFR 93.119. For the discussion of the baseline year for the 2006 $PM_{2.5}$ NAAQS, please refer to Section IV. of today's notice.

2. Rationale and Response to Comments

EPA believes that this provision of today's rule meets statutory requirements for conformity determinations that occur before SIP budgets are available for the 2006 $PM_{2.5}$ NAAQS. EPA believes it is appropriate to provide flexibility and allow 2006 $PM_{2.5}$ areas to meet only one interim emissions test before adequate or approved $PM_{2.5}$ SIP budgets are established.

Using either the build/no-build test or baseline year test is sufficient to meet CAA section 176(c)(1)(B) requirements that transportation activities do not cause or contribute to new air quality violations, worsen existing violations, or delay timely attainment or any interim milestones. The baseline year and the build/no-build tests are sufficient for demonstrating conformity when an area does not have a SIP budget for a portion of a nonattainment area.

Based on the CAA, EPA has previously determined that only in ozone and CO areas of higher classifications [25] are transportation plans and TIPs required to also satisfy section 176(c)(3)(A)(iii), *i.e.,* that the transportation plan and TIP contribute to emissions reductions, during the time period before adequate or approved SIP budgets are available (58 FR 3782–3783; 62 FR 43784–43785; 69 FR 40018, 40019–40031). As a result, the current rule requires these ozone and CO areas to meet both interim emissions tests, rather than only one test.

However, prior to today's rule, the conformity rule already allowed areas designated for the other pollutants, as well as the lower classifications of ozone and CO, to conform based on only one interim emissions test, rather than having to complete two tests and thereby contribute further reductions towards attainment. Today's final rule requiring the 2006 $PM_{2.5}$ areas also to meet only one of the interim emissions tests meets the CAA's requirements in section 176(c)(1)(B) (described above in Section II.A., footnote 1). For more information and the full rationale for allowing some areas to conform based on only one interim emissions test, see the November 24, 1993 final rule (58 FR 62197) that addressed interim requirements for PM_{10} and NO_2 areas, the July 1, 2004 final rule (69 FR 40029) that established interim requirements for 1997 $PM_{2.5}$ areas, and the May 15, 2009 proposed rule.

EPA believes that the no-greater-than-baseline year interim emissions test is an appropriate test for meeting section 176(c)(1)(B) (refer to footnote 1 in Section II.A.) requirements in 2006 $PM_{2.5}$ nonattainment areas. By definition, the no-greater-than baseline year test ensures that emissions from on-road mobile sources are no greater than they were during the baseline year that will most likely be used for 2006

[25] These areas include ozone areas classified as moderate and above, CO areas classified as moderate with design value greater than 12.7 ppm, and CO areas classified as serious.

$PM_{2.5}$ NAAQS SIP planning purposes. If future on-road emissions do not increase above their base year levels, applicable statutory requirements are met.

The build/no-build test also allows a 2006 $PM_{2.5}$ area to meet statutory requirements. As described above, the build/no-build test requires a regional emissions analysis to demonstrate that the emissions from the proposed transportation system in future years would be less than the emissions from the built transportation system in future years. Since for each analysis year, a new transportation plan, TIP, or project (the build scenario) could not result in regional emissions that are higher than those that would occur in the absence of the proposed transportation activities (the no-build scenario) for the system, CAA section 176(c)(1)(B) requirements are met. For these reasons, EPA believes that the build/no-build test continues to be an appropriate interim test prior to SIP budgets being available.

Most commenters supported allowing 2006 $PM_{2.5}$ areas to meet only one of the interim emissions tests because it would give areas the flexibility to use the test they deem most appropriate, given the available data and the unique circumstances of individual areas. However, one commenter objected, arguing that the rule doesn't promote the CAA or the SIP process because it doesn't require reduction of $PM_{2.5}$ emissions. The commenter also stated that the case EPA cited in its proposal, *Environmental Defense* v. *EPA* 467 F .3d 1329 (DC Cir. 2006), is not pertinent because it did not consider climate change factors in any way.

EPA disagrees. First, it has already been clearly established in case law that the conformity provisions of the CAA do not require that transportation projects achieve additional emission reductions in $PM_{2.5}$ areas before SIP budgets are available. As discussed above, allowing 2006 $PM_{2.5}$ areas the choice of interim emissions tests does meet the CAA's requirements. Today's rule is parallel to the current rule's requirements for 1997 $PM_{2.5}$ nonattainment areas (69 FR 40028–40031), which were upheld by an October 2006 court decision. *Environmental Defense* v. *EPA, 467 F.3d 1329 (D.C. Cir. 2006).*[26] Contrary to the commenter's view, this court case is not rendered irrelevant because it doesn't consider climate change factors; conformity applies only to nonattainment and maintenance areas for transportation-related criteria pollutants and their precursors.

The same commenter thought that the 2006 court case does not preclude EPA from reasonably determining that more stringent interim rules are required to "conform to a SIP's purpose of reducing overall emissions." However, EPA believes that the best interpretation of the Act is that reflected in today's rule, which allows 2006 $PM_{2.5}$ areas the choice between the interim emissions tests. This interpretation is also consistent with past rulemakings for interim emissions test requirements for other pollutants, as described above.

Finally, one commenter asked EPA to clarify whether an area that is currently using one of the interim emissions tests for the 1997 $PM_{2.5}$ NAAQS could use the results of that test for the 2006 $PM_{2.5}$ NAAQS. When areas are determining conformity for the 1997 and 2006 $PM_{2.5}$ NAAQS at the same time, they could apply some of the information developed in the 1997 $PM_{2.5}$ regional emissions analysis in creating 2006 $PM_{2.5}$ regional emissions analysis.

First, note that regardless of whether the area is using the baseline year test or build/no-build test, the same analysis years can be used for 1997 $PM_{2.5}$ conformity and 2006 $PM_{2.5}$ conformity when the analyses are done at the same time (refer to 40 CFR 93.119(g) for analysis year requirements).

In most 1997 $PM_{2.5}$ areas, conformity applies only for the annual NAAQS.[27] While the results of an interim emissions test for the 1997 annual $PM_{2.5}$ NAAQS cannot be directly applied for the 2006 24-hour $PM_{2.5}$ NAAQS, the option described below could save implementers some effort when conformity is being determined for both of these NAAQS at the same time. This option applies only when using MOBILE6.2 for regional emissions analyses.[28]

Areas should develop the annual emissions for the 1997 $PM_{2.5}$ NAAQS by estimating emissions in two seasons, summer and winter; four seasons; or the 12 months of the year.[29]

To apply information from the analysis done for the 1997 $PM_{2.5}$ NAAQS to the 2006 $PM_{2.5}$ analysis, for each analysis year, areas should use the emission factors developed in the 1997 $PM_{2.5}$ NAAQS regional emissions analysis for $PM_{2.5}$ and NO_X in a season or month where violations of the 2006 $PM_{2.5}$ NAAQS occurred, and multiply these emission factors by the seasonally-adjusted average daily VMT for the area of the analysis year.[30] If violations occurred in more than one season or month, the interagency consultation process should be used to choose the season or month that would best ensure that the CAA is met, for example by choosing the season with the most frequent or most severe violations, or the season with the highest vehicle miles traveled, or both.[31] The choice of season or seasons should be based on air quality data from the three years used to make designations (*i.e.,* 2006–2008), unless more recent air quality data indicates that a different season should be analyzed, as decided through consultation.

Whatever season is chosen to estimate the build scenario emissions, the same season should be used for comparison whether using the baseline year test or build/no-build test. For example, emissions for a build scenario calculated using winter MOBILE6.2 inputs should be compared to emissions in the winter of the baseline year, or emissions in winter from the no-build scenario.

[26] Petitioners challenged several aspects of the conformity regulations. In its decision, the U.S. Court of Appeals for the District of Columbia Circuit upheld EPA's regulations at 40 CFR 93.119(b)(2), (d), and (e) "because the Act does not require that activities involving transportation actually reduce pollutants, but merely not frustrate an implementation plan's purpose to reduce overall emissions." The court also upheld EPA's regulations at 40 CFR 93.118(b), (d), and (e)(6). The court vacated a narrow provision at 40 CFR 93.109(e)(2)(v) which had allowed 8-hour ozone areas to avoid using their existing 1-hour budgets under certain circumstances. This provision was removed from the transportation conformity regulation in the January 24, 2008 final rule (*see* 73 FR 4434).

[27] There are two areas where conformity for both the 1997 annual and 24-hour NAAQS applies. See Section III.A. for more information.

[28] Areas in California should use the interagency consultation process to determine appropriate methods. In all other 2006 $PM_{2.5}$ areas, EPA expects that MOBILE6.2 will be used for the first 2006 $PM_{2.5}$ conformity determinations.

[29] This description reflects how analyses are to be done for the 1997 $PM_{2.5}$ NAAQS, which is covered in "Guidance for Creating Annual On-Road Mobile Source Emission Inventories for $PM_{2.5}$ Nonattainment Areas for Use in SIPs and Conformity," EPA420–B–05–008, August 2005, found on EPA's Web site at: *http://www.epa.gov/otaq/stateresources/transconf/policy/420b05008.pdf.* In particular, Question 7 on pp. 5–8 of that guidance addresses how analyses are to be done for the 1997 $PM_{2.5}$ NAAQS.

[30] If a 24-hour emissions estimate is available in the appropriate season or month because this step has been completed for 1997 $PM_{2.5}$ NAAQS conformity and conformity is being determined for the 1997 $PM_{2.5}$ NAAQS and the 2006 $PM_{2.5}$ NAAQS at the same time, it does not need to be redone but can be applied in the regional emissions analysis for 2006 $PM_{2.5}$ conformity.

[31] Note that this guidance regarding the choice of season applies only when using MOBILE6.2 and not MOVES because MOBILE6.2 $PM_{2.5}$ emission factors are not sensitive to changes in temperature. EPA will provide guidance on this issue when MOVES is released. *See* EPA's Web site at: *http://www.epa.gov/otaq/models/moves/index.htm* and *http://www.epa.gov/otaq/stateresources/transconf/policy.htm* for future MOVES guidance.

Note that after the effective date of today's final rule, the baseline year for the 2006 $PM_{2.5}$ NAAQS will be 2008 while the baseline year for the 1997 $PM_{2.5}$ NAAQS remains 2002. See Section IV. for additional discussion of the baseline year.

As stated above, once an area has adequate or approved budgets for any $PM_{2.5}$ NAAQS, it must use the budget test instead of an interim emissions test.

C. Implementation of Regional Tests

The existing conformity rule's general requirements for $PM_{2.5}$ regional emissions analyses apply to 2006 $PM_{2.5}$ areas that do not have adequate or approved SIP budgets for the 1997 $PM_{2.5}$ NAAQS. EPA is including this discussion of the existing regulation's requirements for clarity, to help readers understand how the existing regulation applies to areas designated nonattainment for the 2006 $PM_{2.5}$ NAAQS. The discussion below is intended to illustrate how today's final rule is to be implemented in practice for 2006 $PM_{2.5}$ areas without adequate or approved 1997 $PM_{2.5}$ SIP budgets.

1. Decisions Made Through the Interagency Consultation Process

The existing rule's consultation process must be used to determine the test for completing any regional emissions analysis for the 2006 $PM_{2.5}$ NAAQS, as required by 40 CFR 93.105(c)(1)(i). The existing interagency consultation process must also be used to determine the latest assumptions and models for generating motor vehicle emissions regardless of the test used. Refer to Section IV. of this preamble for details about generating baseline year emissions if that interim emissions test is selected for a given conformity determination.

In addition, the consultation process must be used to determine which analysis years should be selected for regional emissions analyses. Before an adequate or approved 2006 $PM_{2.5}$ budget is available, areas would be able to choose, through interagency consultation, either interim emissions test for each conformity determination. However, the same test must be used for each analysis year for a given determination. EPA believes that sufficient flexibility exists without mixing and matching interim emissions tests for different analysis years within one conformity determination, which is unnecessarily complicated and may indicate that an area would not conform using one test consistently.

2. How a Regional Emissions Analysis Can Be Developed When Using An Interim Emissions Test

Under the "Rationale and Response to Comments" above, EPA described how an area using an interim emissions test for 1997 $PM_{2.5}$ conformity could apply it to 2006 $PM_{2.5}$ conformity. This section provides general guidance for creating a 2006 $PM_{2.5}$ regional emissions analysis.

Because the 2006 $PM_{2.5}$ NAAQS designations were only for the 2006 24-hour $PM_{2.5}$ NAAQS, the regional emissions analysis will be based on emissions for a 24-hour time period.

For either the baseline year test or the build/no-build test, for each analysis year, emissions must be estimated for the build scenario according to 40 CFR 93.119(i) with a 24-hour emissions inventory. (The build scenario is referred to as the "Action" scenario at 40 CFR 93.119(i).)

This emissions inventory would include direct $PM_{2.5}$, NO_X, and any other relevant precursor emissions [32] that result from the build scenario using MOBILE6.2 for a 24-hour period. For each analysis year chosen, areas should choose MOBILE6.2 inputs for the season of the year where violations of the 2006 $PM_{2.5}$ NAAQS occurred.[33] If violations occurred in more than one season, implementers should use the interagency consultation process to choose the season (or seasons) that would best ensure that the CAA is met, for example by choosing the season with the most frequent or most severe violations, or the season with the highest vehicle miles traveled, or both.[34] The choice of season or seasons should be based on air quality data from the three years used to make designations (*i.e.,* 2006–2008), unless more recent air quality data indicates that a different season should be analyzed, as decided through consultation.

For each analysis year, these emission factors from MOBILE6.2 for direct $PM_{2.5}$, NO_X, and any other relevant precursor for the season chosen should be multiplied by the seasonally-adjusted average daily VMT in that analysis year to create an estimate of transportation emissions in a 24-hour period. For additional guidance on creating daily emissions inventories, refer to EPA's existing guidance documents.[35]

Note that whatever season is chosen to estimate the build scenario emissions, the same season should be used for comparison whether using the baseline year test or build/no-build test. For example, emissions for a build scenario calculated using winter MOBILE6.2 inputs should be compared to emissions in the winter of the baseline year (*see* Section IV. for a discussion of the baseline year in 2006 $PM_{2.5}$ areas), or emissions in winter from the no-build scenario.

Refer to 40 CFR 93.119 for additional information about conducting the build/no-build and baseline year tests.

3. Conformity Test Requirements for All Areas

Regional emissions analyses under today's final rule are to be implemented through existing conformity requirements such as 40 CFR 93.118, 93.119, and 93.122. For example, the existing conformity rule requires that certain years within the transportation plan (or alternate timeframe) be examined. Under 40 CFR 93.118(d), the following years would be analyzed for the budget test with 2006 $PM_{2.5}$ SIP budgets:

- The attainment year for the 2006 $PM_{2.5}$ NAAQS (if it is within the timeframe of the transportation plan and conformity determination);
- The last year of the timeframe of the conformity determination (40 CFR 93.106(d)); and
- Intermediate years as necessary so that analysis years are no more than ten years apart.

For the interim emissions tests, the existing conformity rule (40 CFR 93.119(g)) requires the following analysis years:

- A year no more than five years beyond the year in which the conformity determination is being made;
- The last year of the timeframe of the conformity determination (as described in 40 CFR 93.106(d));
- Intermediate years as necessary so that analysis years are no more than 10 years apart.

[32] Refer to 40 CFR 93.102(b) for which precursors apply. To date, before they have adequate or approved budgets from a $PM_{2.5}$ SIP, $PM_{2.5}$ areas have determined conformity for only direct $PM_{2.5}$ and NO_X.

[33] In California where EMFAC is used, areas should use the interagency consultation process to determine appropriate methods.

[34] Note that this guidance regarding the choice of season applies only when using MOBILE6.2 and not MOVES because MOBILE6.2 $PM_{2.5}$ emission factors are not sensitive to changes in temperature. EPA will provide guidance on this issue when MOVES is released. *See* EPA's Web site at: *http://www.epa.gov/otaq/models/moves/index.htm* and *http://www.epa.gov/otaq/stateresources/transconf/policy.htm* for future MOVES guidance.

[35] Specifically, see EPA's "Technical Guidance on the Use of MOBILE6.2 for Emission Inventory Preparation," EPA420–R–04–013, August 2004, found on EPA's Web site at: *http://www.epa.gov/otaq/models/mobile6/420r04013.pdf* and "Procedures for Emission Inventory Preparation—Vol IV: Mobile Sources," found at: *http://ntl.bts.gov/DOCS/AQP.html.*

See the relevant regulatory sections of the conformity rule and the July 1, 2004 final rule preamble for further background on how tests have been implemented for other pollutants and NAAQS (69 FR 40020).

4. Cases Involving Multi-Jurisdictional Areas

In July 2004, EPA issued a guidance document for implementing conformity requirements in multi-jurisdictional areas.[36] Multi-jurisdictional areas are nonattainment and maintenance areas with multiple MPOs, one or more MPOs and a donut area, or multi-state areas. EPA believes that this guidance should also apply to 2006 $PM_{2.5}$ areas with multiple jurisdictions.

There are two parts of this existing guidance that are most relevant for implementing conformity for multi-jurisdictional 2006 $PM_{2.5}$ areas that do not have adequate or approved 1997 $PM_{2.5}$ SIP budgets. Part 2 of this guidance describes how conformity would be implemented in all 2006 $PM_{2.5}$ areas before adequate or approved SIP budgets are available for an applicable NAAQS. Part 3 of this guidance is relevant for meeting conformity requirements once adequate or approved 2006 $PM_{2.5}$ SIP budgets are available.

For example, Part 3 of this guidance describes how a state or MPO in a multi-state nonattainment area can operate independently from other states/MPOs for conformity purposes once adequate or approved SIP budgets for a state are established. This same conformity guidance also applies for the 2006 $PM_{2.5}$ NAAQS in these types of areas. Part 3 applies to the cases where subarea budgets are established for a nonattainment area within one state with multiple MPOs. For further information, please refer to EPA's 2004 multi-jurisdictional conformity guidance.

VI. Regional Conformity Tests in 2006 $PM_{2.5}$ Areas That Have Adequate or Approved 1997 $PM_{2.5}$ SIP Budgets

This section describes the conformity tests required for completing regional emissions analyses in areas designated for the 2006 $PM_{2.5}$ NAAQS that have adequate or approved SIP budgets for the 1997 $PM_{2.5}$ NAAQS that cover either part or all of the 2006 $PM_{2.5}$ area. The conformity tests for these areas are found under a new section 93.109(k). See Section V. of this preamble for conformity tests in 2006 $PM_{2.5}$ areas that do not have an adequate or approved 1997 $PM_{2.5}$ SIP budget.

A. Conformity After 2006 $PM_{2.5}$ SIP Budgets Are Adequate or Approved

1. Description of Final Rule

Once a SIP for the 2006 $PM_{2.5}$ NAAQS is submitted with budget(s) that EPA has found adequate or approved, the budget test must be used in accordance with 40 CFR 93.118 to complete all applicable regional emissions analyses for the 2006 $PM_{2.5}$ NAAQS. Conformity is demonstrated if the transportation system emissions reflecting the proposed transportation plan, TIP, or project not from a conforming transportation plan and TIP were less than or equal to the motor vehicle emissions budget level defined by the SIP as being consistent with CAA requirements.

The first submitted SIP for the 2006 $PM_{2.5}$ NAAQS may be an attainment demonstration or a maintenance plan. Nonattainment areas for the 2006 $PM_{2.5}$ NAAQS could also voluntarily choose to submit an "early progress SIP" to establish budgets for conformity purposes prior to required SIPs. See Section V. for further details on requirements for early progress SIPs. EPA has discussed this option in past conformity rule preamble, e.g. the July 1, 2004 transportation conformity final rule (69 FR 40028), and some states have established early progress SIP budgets for conformity purposes.

Whatever the case, interim emissions tests and/or any existing 1997 $PM_{2.5}$ SIP budget would no longer be used for conformity in 2006 $PM_{2.5}$ areas for direct $PM_{2.5}$ or a relevant precursor once an adequate or approved SIP budget for the 2006 $PM_{2.5}$ NAAQS is established for the pollutant or precursor. Once a SIP budget for the 2006 $PM_{2.5}$ NAAQS is adequate or approved, the budget test for 2006 $PM_{2.5}$ conformity would be done based on 24-hour emissions (*i.e.,* tons per day). As noted earlier in Section III.D., areas that were also designated for the 1997 $PM_{2.5}$ NAAQS would continue to meet their existing conformity requirements for the 1997 $PM_{2.5}$ NAAQS, which would include a regional emissions analysis based on annual emissions (i.e., tons per year). The conformity rule at 40 CFR 93.105 requires consultation on the development of SIPs; EPA encourages states to consult with MPOs, state and local transportation agencies, and local air quality agencies sufficiently early when developing 2006 $PM_{2.5}$ SIPs to facilitate future conformity determinations. Once EPA's nonattainment designations are finalized, EPA Regions would be available to assist states in developing early progress SIPs for the 2006 $PM_{2.5}$ NAAQS, if desired.

2. Rationale and Response to Comments

EPA's rationale for the use of the budget test once adequate or approved SIP budgets addressing the 2006 $PM_{2.5}$ NAAQS are available, and the summary of comments received on this provision, is found in Section V.A.2. of this preamble. It is not repeated here.

B. Conformity Before 2006 $PM_{2.5}$ SIP Budgets Are Adequate or Approved

1. Description of the Final Rule

This portion of the final rule is for completing conformity under the 2006 $PM_{2.5}$ NAAQS before 2006 $PM_{2.5}$ SIP budgets are established. For areas designated nonattainment for the 2006 $PM_{2.5}$ NAAQS where all, or a portion, of the area is covered by adequate or approved 1997 $PM_{2.5}$ SIP budgets, the 1997 $PM_{2.5}$ SIP budgets serve as the surrogate for budgets for the 2006 $PM_{2.5}$ NAAQS until the point when 2006 $PM_{2.5}$ SIP budgets are adequate or approved. The interagency consultation process should be used if there are questions about what adequate or approved budgets are established in an area's 1997 $PM_{2.5}$ SIP. In addition, in the case where the 1997 budget does not cover the entire 2006 $PM_{2.5}$ area, one of the interim emissions tests must also be used, as described below. Section IV. of today's rule covers the baseline year to be used for the baseline year interim emissions test and Section V. covers interim emissions tests in 2006 $PM_{2.5}$ areas before adequate or approved SIP budgets for the 2006 $PM_{2.5}$ NAAQS are available.

Many nonattainment areas for the 1997 $PM_{2.5}$ NAAQS may have adequate or approved SIP budgets for the 1997 annual $PM_{2.5}$ NAAQS. For areas that use annual $PM_{2.5}$ budgets to meet 2006 $PM_{2.5}$ requirements, a regional emissions analysis would be done based on an analysis of annual, rather than 24-hour, emissions (*i.e.,* tons per year).

The final rule creates a new provision in § 93.109(k) that covers the four possible scenarios that could result when areas are designated nonattainment for the 2006 $PM_{2.5}$ NAAQS:

- *Scenario 1:* the 2006 $PM_{2.5}$ area nonattainment boundary is the same as the 1997 $PM_{2.5}$ area boundary.

[36] "Companion Guidance for the July 1, 2004, Final Transportation Conformity Rule: Conformity Implementation in Multi-Jurisdictional Nonattainment and Maintenance Areas for Existing and New Air Quality Standard," EPA420–B–04–012, July 2004, found on EPA's Web site at *http://www.epa.gov/otaq/stateresources/transconf/policy/420b04012.pdf.*

• *Scenario 2:* the 2006 $PM_{2.5}$ area is smaller than (and completely within) the 1997 $PM_{2.5}$ area boundary.

• *Scenario 3:* the 2006 $PM_{2.5}$ area is larger than (and contains) the 1997 $PM_{2.5}$ area boundary.

• *Scenario 4:* the 2006 $PM_{2.5}$ area boundary overlaps with a portion of the 1997 $PM_{2.5}$ area boundary.

Most of the 2006 $PM_{2.5}$ areas that are also designated for the 1997 $PM_{2.5}$ NAAQS are Scenario 1 areas; there are areas that belong to Scenarios 2 and 3 as well. EPA is including rules for all four scenarios for the sake of completeness.[37] The following paragraphs describe today's rule provisions for each possible scenario for 2006 $PM_{2.5}$ nonattainment areas.

Scenario 1: 2006 $PM_{2.5}$ areas where the nonattainment boundary is exactly the same as the 1997 $PM_{2.5}$ boundary. In this case, the 2006 and 1997 $PM_{2.5}$ nonattainment boundaries cover exactly the same geographic area. Such areas must meet the budget test for the 2006 $PM_{2.5}$ NAAQS using existing adequate or approved SIP budgets for the 1997 $PM_{2.5}$ NAAQS.

Scenario 2: 2006 $PM_{2.5}$ areas where the boundary is smaller than and within the 1997 $PM_{2.5}$ boundary. In this case, the 2006 $PM_{2.5}$ nonattainment area is smaller than and completely encompassed by the 1997 $PM_{2.5}$ nonattainment boundary. Such areas must meet one of the following versions of the budget test:

• The budget test using the subset or portion of existing adequate or approved 1997 $PM_{2.5}$ SIP budgets that applies to the 2006 $PM_{2.5}$ nonattainment area, where such portion(s) can be appropriately identified; or

• The budget test using the existing adequate or approved 1997 $PM_{2.5}$ SIP budgets for the entire 1997 $PM_{2.5}$ nonattainment area. In this case, any additional reductions beyond those addressed by control measures in the 1997 $PM_{2.5}$ SIP would be required to come from the 2006 $PM_{2.5}$ nonattainment area as described below.

Under today's rule, areas could choose either test each time they make a conformity determination. For any particular conformity determination, however, the same choice would have to be used for each analysis year. EPA believes that to do otherwise would be unnecessarily complicated and may indicate that one test option used consistently for all analysis years would not demonstrate conformity. The consultation process must be used to determine whether using a portion of a 1997 $PM_{2.5}$ SIP budget is appropriate and feasible, and if so, how deriving such a portion would be accomplished. See the preamble of the July 1, 2004 final rule (69 FR 40022–40023) for a description of a similar provision for the 1997 8-hour ozone NAAQS.

A conformity determination using the entire 1997 $PM_{2.5}$ budget would have to include a comparison between the on-road regional emissions produced in the entire 1997 $PM_{2.5}$ area and the existing 1997 $PM_{2.5}$ SIP budget(s). However, if additional reductions are required to meet conformity beyond those produced by control measures in the 1997 $PM_{2.5}$ SIP budgets, those reductions must be obtained from within the 2006 $PM_{2.5}$ nonattainment area only, since the conformity determination is being made for the 2006 $PM_{2.5}$ NAAQS.

Scenario 3: 2006 $PM_{2.5}$ areas where the boundary is larger than the 1997 $PM_{2.5}$ boundary. In this case, an entire 1997 $PM_{2.5}$ nonattainment or maintenance area would be within a larger 2006 $PM_{2.5}$ nonattainment area and the 1997 $PM_{2.5}$ budgets would not cover the entire 2006 $PM_{2.5}$ nonattainment area. Such areas are required to meet one of the following:

• The budget test using the 1997 $PM_{2.5}$ budget(s) for the 1997 $PM_{2.5}$ area, that is, the portion of the 2006 $PM_{2.5}$ area that lies within the 1997 $PM_{2.5}$ area boundary, and one of the interim emissions tests for either the remaining portion of the 2006 $PM_{2.5}$ nonattainment area, the entire 2006 $PM_{2.5}$ area, or the entire portion of the 2006 $PM_{2.5}$ area within an individual state, if 1997 $PM_{2.5}$ budgets are established in each state in a multi-state area; or

• The budget test using the existing adequate or approved 1997 $PM_{2.5}$ SIP budgets for the entire 2006 $PM_{2.5}$ nonattainment area.[38]

The budget test must be completed according to the requirements in 40 CFR 93.118, and the interim emissions test must follow the requirements of 40 CFR 93.119.

Once an area selects a particular interim emissions test and the geographic area it will address, the same test must be used consistently for all analysis years. The consultation process must be used to determine which analysis years should be selected for regional emissions analyses where the budget test and interim emissions tests are used. It may be possible to choose analysis years that satisfy both the budget and interim emissions test requirements for areas using both tests prior to adequate or approved 2006 $PM_{2.5}$ SIP budgets being established. Further information regarding the implementation of these requirements is illustrated later in this section.

Scenario 4: 2006 $PM_{2.5}$ areas where the boundary partially overlaps a portion of the 1997 $PM_{2.5}$ boundary. In this case, the 1997 and 2006 $PM_{2.5}$ nonattainment boundaries partially overlap. As in the case with Scenario 3 areas, the 1997 $PM_{2.5}$ budgets would not cover the entire 2006 $PM_{2.5}$ nonattainment area. However, unlike Scenario 3 areas, the 2006 area does not contain the entire 1997 $PM_{2.5}$ nonattainment or maintenance area. Therefore, 1997 $PM_{2.5}$ budgets cannot be the sole test of conformity for the 2006 $PM_{2.5}$ NAAQS, since a conformity determination must include a regional emissions analysis that includes the entire 2006 $PM_{2.5}$ nonattainment area.

The 2006 $PM_{2.5}$ areas covered under this scenario must use the 1997 $PM_{2.5}$ budget(s) to meet the budget test for the portion of the 1997 $PM_{2.5}$ area and budgets that overlap with the 2006 $PM_{2.5}$ area boundary, and one of the interim emissions tests for either the remaining portion of the 2006 $PM_{2.5}$ nonattainment area, the entire 2006 $PM_{2.5}$ area, or the entire portion of the 2006 $PM_{2.5}$ area within an individual state, if 1997 $PM_{2.5}$ budgets are established in each state in a multi-state area. Under this final rule, the budget test must be completed according to the requirements in 40 CFR 93.118, and the interim emissions test must follow the requirements of 40 CFR 93.119.

Similar to Scenario 3 areas, once an area selects a particular interim emissions test and the geographic area it will address, the same test must be used consistently for all analysis years. Further information regarding the implementation of these requirements is found in the discussion above for Scenario 3, and illustrated later in this section.

[37] Today's final rule is based on EPA's experience in establishing conformity requirements for areas designated for the 1997 8-hour ozone NAAQS that had SIP budgets for the 1-hour ozone NAAQS, found in 40 CFR 93.109(e)(2). The four boundary scenarios are the same as the four boundary scenarios EPA described for the 1997 8-hour ozone areas that had existing 1-hour ozone budgets. EPA's 2004 guidance entitled, "Companion Guidance for the July 1, 2004 Final Transportation Conformity Rule, Conformity Implementation in Multi-Jurisdictional Nonattainment and Maintenance Areas for Existing and New Air Quality Standards," (EPA420–B–04–012), contains diagrams of the four scenarios for 8-hour ozone areas. Readers may be interested in reviewing these diagrams as they read the following description of the regulation. This document can be found on EPA's transportation conformity website at: *http://www.epa.gov/otaq/stateresources/transconf/policy/420b04012.pdf.*

[38] While the existing regulation for 8-hour ozone areas does not explicitly contain this option, it was addressed in the preamble to the final rule addressing 8-hour ozone areas (July 1, 2004, 69 FR 40027).

2. Rationale and Response to Comments

General. EPA believes that using the existing 1997 $PM_{2.5}$ budgets as a surrogate for the 2006 $PM_{2.5}$ NAAQS is required by the CAA. In *Environmental Defense* v. *EPA,* 467 F.3d 1329 (D.C. Cir. 2006), the Court of Appeals for the District of Columbia Circuit held that where a motor vehicle emissions budget developed for the revoked 1-hour ozone NAAQS existed in an approved SIP, that budget must be used to demonstrate conformity to the 8-hour ozone NAAQS until the SIP is revised to include budgets for the new NAAQS. EPA reflected the court's decision for ozone conformity tests in its January 24, 2008 final rule (73 FR 4434).

While the *Environmental Defense* case concerned ozone, EPA believes the court's holding is relevant for other pollutants for which conformity must be demonstrated. Consequently, EPA believes that 2006 $PM_{2.5}$ areas that have 1997 $PM_{2.5}$ budgets must use them for 2006 $PM_{2.5}$ conformity before 2006 $PM_{2.5}$ SIP budgets are established.

The use of the 1997 $PM_{2.5}$ budgets as a surrogate for the 2006 $PM_{2.5}$ NAAQS also would ensure that CAA requirements are met. Section 176(c) of the CAA requires that transportation activities may not cause or contribute to new violations, worsen existing violations, or delay timely attainment or any interim milestones. In these areas, the budgets for the 1997 annual $PM_{2.5}$ NAAQS have been the measure of $PM_{2.5}$ conformity thus far, and have been consistent with these areas' $PM_{2.5}$ air quality progress to date. Therefore, using budgets that address the 1997 annual $PM_{2.5}$ NAAQS where no other $PM_{2.5}$ budgets are available ensures that the requirements of CAA 176(c) are met. Once 2006 $PM_{2.5}$ budgets are found adequate or approved, the budget test for that NAAQS provides the best means to determine whether transportation plans, TIPs, or projects meet CAA requirements.

The budget test is also a better environmental measure than the interim emissions tests when SIP budgets for a pollutant or precursor are available. As EPA reiterated in its July 1, 2004 final rule (69 FR 40026), when motor vehicle emissions budgets have been established by SIPs, they provide a more relevant basis for conformity determinations than the interim emissions tests. EPA believes this is true even though in most cases the budgets established for the 1997 $PM_{2.5}$ NAAQS would address an annual rather than a 24-hour NAAQS. A 1997 $PM_{2.5}$ budget represents the state's best estimate of the level of permissible $PM_{2.5}$ emissions from the on-road transportation sector for a particular area. Such a budget is created based on local information for that particular area—its population, its estimated vehicle miles traveled and other travel data, its transit availability, its particular vehicle fleet, its local controls, and so forth. Hence EPA believes using budgets, designed for specific areas and based on information from those specific areas, is preferable to using either of the more generic interim emissions tests. The baseline year and the build/no-build tests are sufficient for demonstrating conformity when an area does not have a budget for a portion of a nonattainment area. However, these interim emissions tests usually do not ensure that transportation emissions promote progress for the NAAQS to the same extent that the use of motor vehicle emissions budgets do.

In addition, using the 1997 $PM_{2.5}$ budgets for 2006 $PM_{2.5}$ conformity purposes may also streamline the conformity process for areas designated nonattainment for both the 1997 and 2006 $PM_{2.5}$ NAAQS. These areas would already be using 1997 $PM_{2.5}$ budgets for conformity of that NAAQS. In areas where the 1997 and 2006 $PM_{2.5}$ nonattainment boundaries are the same (Scenario 1), today's final rule requires these areas to meet only one type of test—the budget test—to demonstrate conformity for both the 1997 and 2006 $PM_{2.5}$ NAAQS, although the attainment year, which is a required analysis year, will be different for these two NAAQS.

For multi-state 2006 $PM_{2.5}$ nonattainment areas, today's final rule preserves states' ability to determine conformity independently from one another, if a state has already established budgets for its own state (and/or MPO(s)) for the 1997 $PM_{2.5}$ NAAQS. Further explanation and examples are given below in Section VI.C.

While today's final rule concerns the 2006 $PM_{2.5}$ NAAQS, this same rationale regarding conformity tests would apply for future new or revised NAAQS of any transportation-related criteria pollutant. Therefore, EPA may amend the rule in the future to apply the conformity test language found in today's § 93.109(j) and (k) more generally. EPA is not doing so in today's final rule as such a provision was not proposed, and EPA intends to solicit and consider public comments on applying this language to future new or revised NAAQS before adopting any such provision.

Scenario 1 and 2 areas. Today's final rule for conformity in 2006 $PM_{2.5}$ areas before budgets that address that NAAQS are available is largely consistent with the process that EPA finalized for 8-hour ozone areas designated under the 1997 ozone NAAQS where 1-hour ozone budgets exist (69 FR 40021–40028). Requirements for Scenario 1 and 2 areas are identical to the final rule for these 8-hour ozone areas. Scenario 2 2006 $PM_{2.5}$ areas also have the choice of adjusting the existing 1997 $PM_{2.5}$ budgets for the new geographical area. As we indicated in the November 5, 2003 proposed rule for the 8-hour ozone areas (68 FR 62702), using the relevant portion of existing budgets for purposes of conducting conformity determinations for a different NAAQS of the same pollutant is appropriate since the budgets for the 1997 $PM_{2.5}$ NAAQS would only be used as a surrogate for the 2006 $PM_{2.5}$ NAAQS. These 1997 $PM_{2.5}$ budgets still have to be met in the 1997 $PM_{2.5}$ areas.

Scenario 3 and 4 areas. Some Scenario 3 areas and all Scenario 4 areas must also meet one of the interim emissions tests, for either the portion of the 2006 $PM_{2.5}$ area not covered by the 1997 $PM_{2.5}$ SIP budgets, the entire $PM_{2.5}$ area, or the entire portion of the 2006 $PM_{2.5}$ area within an individual state. As explained in the November 2003 proposed rule for 8-hour ozone areas (68 FR 62702), in these cases budgets cannot be the sole test of conformity because a conformity determination must include a regional emissions analysis that covers the entire nonattainment area.

However, some Scenario 3 areas may be able to demonstrate conformity without an interim emissions test. Scenario 3 $PM_{2.5}$ areas have an option that similar 8-hour ozone areas also have: The entire larger, newly designated area could meet budgets established for the smaller, existing area. In the July 1, 2004 final rule, EPA clarified that 8-hour ozone areas have this option. In that final rule, EPA noted that while this option was not explicitly addressed by the regulatory text, it is consistent with the requirements and is available to interested 8-hour ozone areas (69 FR 40027).

Finally, EPA believes that statutory requirements are met under the proposal to use either interim emissions test when no adequate or approved $PM_{2.5}$ SIP budgets are available. See further rationale regarding this flexibility in today's final rule in Section V.

EPA did not receive any specific comments on this portion of the rulemaking, but one commenter supported the use of EPA's 2004 multi-jurisdictional guidance for 2006 $PM_{2.5}$ areas. This guidance, discussed further

below in C.2. of this section, reflects the requirements finalized today.

C. General Implementation of Regional Tests

Today's final rule applies the existing conformity rule's general requirements for $PM_{2.5}$ regional emissions analyses to all 2006 $PM_{2.5}$ areas. As described in Section V.C., EPA is including this discussion of the existing regulation's requirements for clarity, to help readers understand how the existing regulation would apply to areas designated nonattainment for the 2006 $PM_{2.5}$ NAAQS.

The discussion below is intended to illustrate how today's rule will be implemented in practice for 2006 $PM_{2.5}$ areas with adequate or approved 1997 $PM_{2.5}$ SIP budgets.

1. Conformity Test Requirements for Most Areas

Regional emissions analyses under today's final rule must be implemented through existing conformity requirements such as 40 CFR 93.118, 93.119, and 93.122. For example, the conformity rule requires that only certain years within the transportation plan (or alternate timeframe) be examined.

The consultation process must be used to determine which analysis years should be selected for regional emissions analyses for the budget test. The conformity rule at 40 CFR 93.118(d)(2) requires the following analysis years for this test:

- The attainment year for the 2006 $PM_{2.5}$ NAAQS (if it is within the timeframe of the transportation plan and conformity determination);
- The last year of the timeframe of the conformity determination (40 CFR 93.106(d)); and
- Intermediate years as necessary so that analysis years are no more than ten years apart.

Areas covered by § 93.109(k) of today's final rule will also be determining conformity for the 1997 $PM_{2.5}$ NAAQS, using adequate or approved budgets established for that NAAQS, although there will be some differences in analysis years required for the 2006 and 1997 $PM_{2.5}$ NAAQS (*e.g.*, the attainment year, which is a required analysis year, will be different for these two NAAQS).

See the relevant regulatory sections of the conformity rule and the July 1, 2004 final rule preamble for further background on how tests have been implemented for other pollutants and standards (69 FR 40020).

2. Cases Involving Multi-Jurisdictional Areas

As described earlier, EPA issued a guidance document in 2004 for implementing conformity requirements in multi-jurisdictional areas. There are two parts of this existing guidance that are relevant for implementing conformity for these areas. Part 3 of the existing guidance describes how conformity would be implemented in all 2006 $PM_{2.5}$ areas once adequate or approved SIP budgets for the 2006 $PM_{2.5}$ NAAQS are established. Part 4 of this guidance is relevant for meeting conformity requirements when only 1997 $PM_{2.5}$ budgets are available.[39]

This guidance is also applicable for conformity purposes in multi-state and multi-MPO areas. For example, in multi-state 2006 $PM_{2.5}$ nonattainment areas where each state has its own 1997 $PM_{2.5}$ SIP budgets, the states could determine conformity for the 2006 NAAQS (as well as the 1997 $PM_{2.5}$ NAAQS) independently of each other. In addition, MPOs in areas that have subarea budgets for the 1997 $PM_{2.5}$ NAAQS could use these subarea budgets for conformity to the 2006 $PM_{2.5}$ NAAQS.

For further information, please refer to Section V.C. and EPA's 2004 multi-jurisdictional conformity guidance.

VII. Other Conformity Requirements for 2006 $PM_{2.5}$ Areas

The conformity regulations already provide the remaining requirements that are necessary for conformity under the 2006 $PM_{2.5}$ NAAQS. Any existing conformity requirements that are listed for "$PM_{2.5}$" areas that have not been revised by today's final rule apply to 2006 $PM_{2.5}$ nonattainment or maintenance areas as well. These provisions have already been promulgated, based on past rulemakings and rationale, and are unchanged by today's rule. For example, a hot-spot analysis is required for certain projects in any $PM_{2.5}$ nonattainment and maintenance areas before such projects can be found to conform. These requirements are found in §§ 93.116(a) and § 93.123(b) of the conformity rule, although please note that EPA for other reasons has clarified amendments to section 93.116(a) in today's final rule; see Section IX. The hot-spot analysis requirements that were promulgated for "$PM_{2.5}$" areas in the conformity rule did not need to be amended to apply to 2006 $PM_{2.5}$ areas, because they already apply for this NAAQS.

A hot-spot analysis in an area designated for both the 1997 and 2006 $PM_{2.5}$ NAAQS would have to demonstrate that the project meets the conformity rule's hot-spot requirements for all of the $PM_{2.5}$ NAAQS for which the area is designated nonattainment:

- If an area is designated nonattainment for only the 2006 $PM_{2.5}$ NAAQS, the analysis would have to consider only this NAAQS;
- If an area is designated nonattainment for the 1997 annual NAAQS and the 2006 24-hour NAAQS, the analysis would have to consider both NAAQS;
- If an area is designated nonattainment for both the 1997 annual and 1997 24-hour NAAQS, as well as the 2006 24-hour NAAQS, the analysis would have to consider all of these NAAQS.

Please refer to the March 10, 2006 final rule for additional information regarding hot-spot analyses (47 FR 12468) and EPA and FHWA's current guidance for implementing this requirement (Transportation Conformity Guidance for Qualitative Hot-spot Analyses in $PM_{2.5}$ and PM_{10} Nonattainment and Maintenance Areas, March 2006, EPA420–B–06–902). EPA will also be releasing PM quantitative hot-spot modeling guidance in the near future. Please check EPA's Web site at: *http://www.epa.gov/otaq/stateresources/transconf/policy.htm.*

Section 93.117 of the conformity rule, which requires project-level conformity determinations to comply with any $PM_{2.5}$ control measures in an approved SIP, also applies for conformity under the 2006 $PM_{2.5}$ NAAQS. Again, EPA promulgated this requirement in general for nonattainment and maintenance areas under the $PM_{2.5}$ NAAQS. See EPA's July 2004 final rule for further information on this requirement (69 FR 40036–40037).

EPA will work with $PM_{2.5}$ nonattainment areas as needed to ensure that state and local agencies can meet existing and new conformity requirements for the 2006 $PM_{2.5}$ NAAQS in a timely and efficient manner.

VIII. Transportation Conformity in PM_{10} Nonattainment and Maintenance Areas and the Revocation of the Annual PM_{10} NAAQS

A. Background

On October 17, 2006, EPA issued a final rule establishing changes to the $PM_{2.5}$ and PM_{10} NAAQS (71 FR 61144). The October 2006 final rule retained the

[39] This section of the guidance covers how 8-hour ozone areas that have 1-hour ozone budgets would proceed with developing their regional emissions analyses and making conformity determinations, which is analogous to any 2006 $PM_{2.5}$ areas that have 1997 budgets in the interim.

24-hour PM_{10} NAAQS of 150 μg/m³, and revoked the annual PM_{10} NAAQS of 50 μg/m³. EPA made a commitment in the October 2006 final rule to provide information regarding how transportation conformity will be implemented under the revised PM_{10} NAAQS (71 FR 61215). To satisfy this commitment, EPA described which conformity tests would apply in PM_{10} nonattainment and maintenance areas ("PM_{10} areas") in a guidance document.[40] Today's final rule updates the conformity rule in response to this commitment.

CAA section 176(c)(5) requires conformity only in areas that are designated nonattainment or maintenance for a given pollutant and NAAQS. Therefore, transportation conformity has continued to apply to all PM_{10} nonattainment and maintenance areas because transportation conformity applies based on an area's status as a nonattainment or maintenance area, and PM_{10} designations were not affected by the October 2006 final rule. As stated in the October 2006 final rule, "both transportation and general conformity will continue to apply to all PM_{10} nonattainment and maintenance areas since no designations are changing" (71 FR 61215).

As of the effective date of the October 2006 rule, conformity determinations in PM_{10} areas have been required only for the 24-hour PM_{10} NAAQS. The October 2006 final rule stated, "However, because EPA is revoking the annual PM_{10} NAAQS in this final rule, after the effective date of this rule conformity determinations in PM_{10} areas will only be required for the 24-hour PM_{10} NAAQS; conformity to the annual PM_{10} NAAQS will no longer be required" (71 FR 61215). Please refer to the October 17, 2006 final rule for additional information (71 FR 61144).

B. Description of the Final Rule

EPA has added two new definitions to 40 CFR 93.101 of the conformity rule to distinguish between the 24-hour PM_{10} NAAQS and the annual PM_{10} NAAQS. EPA has also updated 40 CFR 93.109(g) so that:

- PM_{10} areas that have adequate or approved SIP budgets for both the 24-hour and annual PM_{10} NAAQS are required to use only the budgets established for the 24-hour PM_{10} NAAQS. Conformity to the annual PM_{10} budgets in such a case is no longer required.
- PM_{10} areas that have adequate or approved SIP budgets for only the annual PM_{10} NAAQS are required to use them for PM_{10} conformity determinations until PM_{10} SIP budgets for the 24-hour PM_{10} NAAQS are found adequate or approved. For areas that use annual PM_{10} budgets, a regional emissions analysis must be done based on an analysis of annual, rather than 24-hour, emissions.

No other conformity requirements for PM_{10} nonattainment and maintenance areas have been changed by the final rule. For example, the requirement for project-level conformity determinations in PM_{10} areas continues to apply, including hot-spot analyses in some cases (see §§ 93.116(a) and 93.123(b)). Although project-level conformity requirements and any required hot-spot analyses apply only with respect to the 24-hour PM_{10} NAAQS, this requires no revisions to the conformity rule to implement.

Where an area has adequate or approved PM_{10} budgets for both the annual and 24-hour PM_{10} NAAQS, it is not necessary to remove the annual PM_{10} NAAQS budgets from the SIP. Such annual budgets do not apply for conformity purposes if an area has budgets for the 24-hour PM_{10} NAAQS. However, states can choose to revise such SIPs to remove any annual PM_{10} budgets, since this NAAQS has been revoked and remaining 24-hour PM_{10} budgets ensure that anti-backsliding SIP requirements are met.

C. Rationale and Response to Comments

Today's update to the rule for PM_{10} conformity tests results from the revocation of the annual PM_{10} NAAQS. In areas where annual PM_{10} budgets are the only PM_{10} budgets that are adequate or approved, EPA believes it is necessary to use such budgets to demonstrate conformity for the 24-hour PM_{10} NAAQS to meet CAA requirements. As discussed above in Section VI.B.2., a 2006 decision by the Court of Appeals for the DC Circuit clarified this point. In this decision, the court stated, "A current SIP, even one tied to outdated NAAQS, remains in force until replaced by another but later-approved SIP. The CAA provides that the current SIPs are legally sufficient until they are replaced by new SIPs." (*Environmental Defense* v. *EPA,* 467 F.3d 1329, 1335 (DC Cir. 2006)). Refer to Section VI.B.2. for further information about the decision. EPA believes that today's final rule is consistent with this decision.

Consequently, EPA believes that annual PM_{10} budgets must be used to demonstrate conformity for the 24-hour PM_{10} NAAQS when adequate or approved 24-hour PM_{10} budgets are not yet established. In areas with PM_{10} budgets that address only the annual PM_{10} NAAQS, these budgets have been the measure of PM_{10} conformity thus far, and have been consistent with these areas' PM_{10} air quality progress to date. Therefore, using annual PM_{10} budgets where no other PM_{10} SIP budgets are available ensures that air quality progress to date is maintained, air quality will not be worsened and attainment and any interim milestones for the 24-hour PM_{10} NAAQS will not be delayed because of emissions increases. Once 24-hour PM_{10} budgets are found adequate or approved, the budget test using only the budgets for the 24-hour PM_{10} NAAQS provides the best means to determine whether transportation plans, TIPs, or projects meet CAA conformity requirements.

Most PM_{10} areas already have adequate or approved budgets for only the 24-hour PM_{10} NAAQS. However, there are a limited number of PM_{10} areas that have SIP budgets only for the annual PM_{10} NAAQS. EPA believes that the statute as interpreted by the court requires such areas to continue to use these adequate or approved annual PM_{10} SIP budgets, rather than use one of the interim emissions tests in 40 CFR 93.119(d) which could be less environmentally protective tests than SIP budgets.

While EPA addressed how the revocation affected PM_{10} transportation conformity requirements in its September 2008 guidance, updating the regulation clarifies the requirements and simplifies implementation. This final rule also saves resources in some areas with adequate or approved SIP budgets for both the 24-hour and annual PM_{10} NAAQS because these areas are no longer required to use budgets for the annual PM_{10} NAAQS. As mentioned above, today's minor revision to the conformity rule is consistent with what is already required in the field for PM_{10} nonattainment and maintenance areas.

EPA received one comment supporting this rule change and no comments opposing it.

IX. Response to the December 2007 Hot-Spot Court Decision

A. Background

EPA promulgated a final rule on March 10, 2006 (71 FR 12468) that revised the previous PM_{10} conformity hot-spot analysis requirements and applied these revised requirements to

[40] Transportation Conformity in PM_{10} Nonattainment and Maintenance Areas and the Revocation of the Annual PM_{10} Standard, September 25, 2008, found on EPA's Web site at: *http://www.epa.gov/otaq./stateresources/transconf/policy.htm.*

$PM_{2.5}$.[41] A hot-spot analysis is defined in 40 CFR 93.101 as an estimation of likely future localized pollutant concentrations and a comparison of those concentrations to relevant NAAQS. A hot-spot analysis assesses the air quality impacts of an individual transportation project on a scale smaller than a regional emissions analysis for an entire nonattainment or maintenance area.

Prior to today, section 93.116(a) of the conformity rule read: "* * * The FHWA/FTA project must not cause or contribute to any new localized CO, PM_{10}, and/or $PM_{2.5}$ violations or increase the frequency or severity of any existing CO, PM_{10}, and/or $PM_{2.5}$ violations * * *." These requirements continue to apply in today's rule, and are satisfied for applicable projects[42] "if it is demonstrated that during the time frame of the transportation plan no new local violations will be created and the severity or number of existing violations will not be increased as a result of the project." Sections 93.105(c)(1)(i) and 93.123 contain the consultation and methodology requirements for conducting hot-spot analyses.

A hot-spot analysis, when required, is only one part of a project-level conformity determination. In order to meet all CAA requirements, an individual project must also be included in a conforming transportation plan and TIP (and regional emissions analysis for the entire nonattainment or maintenance area) and meet any other applicable requirements.

Environmental petitioners challenged the March 2006 final rule, and raised several issues related to it. First, petitioners alleged that the final rule did not ensure that transportation projects complied with CAA section 176(c)(1)(A) and (c)(1)(B)(iii). Second, petitioners alleged that EPA had previously approved its MOBILE6.2 on-road mobile source emissions model for use in quantitative $PM_{2.5}$ and PM_{10} hot-spot analyses, and withdrew such approval in the March 2006 final rule without providing adequate notice and opportunity for public comment.[43]

On December 11, 2007, the D.C. Circuit Court of Appeals issued its decision, and upheld EPA's March 2006 final rule and remanded one issue for clarification. *Environmental Defense* v. *EPA,* 509 F.3d. 553 (D.C. Cir. 2007). The court agreed with EPA's position that CAA section 176(c)(1)(A) does not require that an individual transportation project reduce emissions, but only that such a project not worsen air quality compared to what would have otherwise occurred if the project was not implemented. The court held that, assuming section 176(c)(1)(A) applies in the local area surrounding an individual project, EPA's position that this provision is met if a transportation project conforms to the emissions estimates and control requirements of the SIP was a reasonable one. The court also rejected petitioners' arguments regarding MOBILE6.2 and found that EPA had in fact provided adequate notice and comment on its decision not to require quantitative PM hot-spot analyses using MOBILE6.2 due to the model's technical limitations at the project-level (71 FR 12498–12502).

However, the court remanded one issue to EPA for further explanation of the Agency's interpretation of CAA section 176(c)(1)(B)(iii). The court instructed EPA on remand to interpret how this provision of the Act is met within the local area affected by an individual project, or explain why this statutory provision does not apply within such an area. Today's final rule responds to this part of the court's decision.

B. Description of the Final Rule

EPA has made two changes to section 93.116(a) of the conformity rule to address the court's remand. First, EPA is explicitly stating in this provision that federally funded or approved highway and transit projects in $PM_{2.5}$ and PM_{10} nonattainment and maintenance areas must meet the requirements of CAA section 176(c)(1)(B)(iii) within the local area affected by the project. That is, § 93.116(a) now expressly says that project must not delay timely attainment or any interim milestones. EPA has also explicitly stated in § 93.116 the requirement that projects must be included in a regional emissions analysis under 40 CFR 93.118 or 93.119. Consistent with the court's decision, as explained below, EPA is not requiring an individual project to reduce emissions in the local project area.

These revisions are intended to clarify and make more explicit EPA's longstanding interpretation of the CAA as it applies to hot-spot analyses, and do not reflect any substantive changes to existing requirements for project-level conformity determinations. Under today's final rule, project-level conformity determinations, including any hot-spot analyses, will continue to be performed in the same manner as current practice. Projects will continue to be required to be a part of a regional emissions analysis that supports a conforming transportation plan and TIP. Hot-spot analyses will need to demonstrate that during the time frame of the transportation plan no new local violations would be created and the severity or number of existing violations would not be increased as a result of a new project. By making these demonstrations, it can be assured that the project would not delay timely attainment or any required interim reductions or milestones, as described further below. In addition, project sponsors must continue to document the hot-spot analysis as part of the project-level conformity determination, and the public continues to be able to comment on any aspects of the conformity determination through existing public involvement requirements.

EPA notes that today's final rule also addresses new projects in CO nonattainment and maintenance areas, since the hot-spot analysis requirements in section 93.116(a) also apply to such areas. Although the March 2006 final rule and the December 2007 court case did not involve CO hot-spot requirements, EPA believes it is appropriate to clarify that CAA section 176(c)(1)(B)(iii) must also be met for projects in CO nonattainment and maintenance areas.

C. Rationale and Response to Comments

1. General

Project-level conformity determinations must demonstrate that all of the requirements in CAA section 176(c)(1)(B) are met. Section 176(c)(1)(B) defines conformity to a SIP to mean "that such activities will not (i) cause or contribute to any new violation of any NAAQS in any area; (ii) increase the frequency or severity of any existing violation of any NAAQS in any area; or (iii) delay timely attainment of any NAAQS or any required interim emission reductions or other milestones in any area."

[41] The March 10, 2006 rule constituted final action on EPA's original proposal from November 5, 2003 (68 FR 62690, 62712) and a supplemental proposal from December 13, 2004 (69 FR 72140, 72144–45, and 72149–50).

[42] Section 93.123(b) contains the types of projects for which a hot-spot analysis applies in $PM_{2.5}$ and PM_{10} areas. For additional discussion, please refer to "V. Projects of Air Quality Concern and General Requirements for $PM_{2.5}$ and PM_{10} Hot-Spot Analyses" in the preamble of the March 10, 2006 final rule at 71 FR 12490–12498.

[43] EPA and petitioners settled a third issue that was not raised to the court. The settlement was finalized on June 22, 2007 (72 FR 34460), and described a stakeholder process that EPA will use to develop its future $PM_{2.5}$ and PM_{10} quantitative hot-spot modeling guidance.

In *Environmental Defense,* the court held that EPA did not adequately explain how it interpreted the language of CAA section 176(c)(1)(B)(iii) in conjunction with related language in sections 176(c)(1)(B)(i) and (ii). The court stated that, if "any area" in the first two provisions refers to a "local area," then EPA must either interpret the term "any area" in section 176(c)(1)(B)(iii) to also mean "local area," or explain why a different interpretation is reasonable. 509 F.3d at 560–61. EPA believes that "any area" as used in the first two provisions does include local areas, and that the same interpretation should apply to the third provision as well; therefore all of section 176(c)(1)(B) requirements must be met in the local project area.

EPA believes that its conformity hot-spot regulations, as well as other conformity requirements, already require that individual projects comply with section 176(c)(1)(B)(iii) in the local project area. EPA has always intended the term "any area" in all three statutory provisions of section 176(c)(1)(B) to include the local area affected by the emissions produced by a new project. For example, as EPA stated in the March 2006 final hot-spot rule (71 FR 12483), "a regional emissions analysis for an area's entire planned transportation system is not sufficient to ensure that individual projects meet the requirements of section 176(c)(1)(B) where projects could have a localized air quality impact."

To implement section 176(c)(1)(B) requirements in $PM_{2.5}$, PM_{10}, and CO nonattainment and maintenance areas (40 CFR 93.109(b)), EPA's conformity rule has required and continues to require project-level conformity determinations to address the regional and local emissions impacts from new projects. Section 93.115(a) of the conformity rule requires that an individual project must be consistent with the emissions projections and control measures in the SIP, either by inclusion in a conforming transportation plan and TIP or through a separate demonstration (and regional emissions analysis developed under 40 CFR 93.118 or 93.119). In addition, section 93.116(a) requires that some project-level conformity determinations include a hot-spot analysis that demonstrates emissions from a single project do not negatively impact air quality within the area substantially affected by the project.[44] EPA concludes that through meeting all of these requirements, it can be assured that a project does not cause or contribute to a new violation, worsen a violation, or delay timely attainment or any interim milestones.

However, in light of the court's request for further explanation, today's rule specifically clarifies that the term "any area" in CAA section 176(c)(1)(B) applies to any portion of a nonattainment or maintenance area, including the local area affected by a transportation project. Today's final rule thus ensures that transportation planners address the requirement that there be no delay in timely attainment or any interim milestones in the local project area.

EPA notes that CAA section 176(c)(1)(B)(iii) does not require that transportation activities provide additional emissions reductions in a local project area in order to meet the requirement not to delay timely attainment or any interim milestones. EPA explained this interpretation in the preamble to its March 2006 hot-spot regulations (71 FR 12482), and the court upheld this interpretation in *Environmental Defense* v. *EPA* (509 F.3d 553, 560 (D.C. Cir. 2007). See also *Environmental Defense* v. *EPA,* 467 F.3d 1329, 1337 (DC Cir. 2006) ("EPA argues, and we agree, that conformity to a SIP can be demonstrated by using the build/no-build test, even if individual transportation plans do not actively reduce emissions"). CAA section 176(c)(1)(B)(iii) does not require a new project to mitigate new or worsened air quality violations that it does not cause. This statutory provision also does not require a new project to contribute new interim reductions beyond those that are already required in the SIP. Rather, the hot-spot determination must instead conclude that the new project, in conjunction with all other emissions increases and decreases in the local project area, is consistent with the emissions budgets in the SIP and does not produce any new or worsen any existing violations.

The only case where Congress specifically required individual projects to provide emission reductions in hot-spot analyses is for projects in certain CO nonattainment areas. CAA section 176(c)(3)(B)(ii) requires individual projects in CO nonattainment areas to "eliminate or reduce the severity and number of violations of the carbon monoxide NAAQS in areas substantially affected by the project."[45] Since Congress did not establish such a requirement for any project in $PM_{2.5}$ and PM_{10} areas under section 176(c)(3)(B)(ii), and for the reasons described in today's final rule, EPA does not interpret such a requirement to apply to projects in $PM_{2.5}$ or PM_{10} areas under section 176(c)(1)(B)(iii).

Some commenters supported EPA's interpretation, while others disagreed. The other commenters believed that, despite the court's decision, a project should not be allowed to proceed unless it reduces emissions sufficient to offset emissions from other sources that negatively impact meeting the NAAQS. Commenters thought today's rule would allow a project to conform even when there are NAAQS violations after the attainment date and that EPA's rule eliminates the opportunity to identify and remedy violations.

The commenters' argument—that section 176(c)(1)(B)(iii) requires transportation projects to reduce emissions in the area affected by the project—has been raised in earlier transportation conformity rulemakings and repeatedly rejected by the D.C. Circuit Court of Appeals. In *Environmental Defense Fund* v. *EPA,* the court explained that "[a]lthough the Act states that SIPs must reduce violations, and therefore emissions, it is notably silent on whether *transportation plans themselves,* which are but one part of the SIP, must reduce emissions." 467 F.3d 1329, 1338 (D.C. Cir. 2006) (emphasis in original). The court went on to uphold as reasonable EPA's interpretation that individual transportation plans need not reduce emissions to comply with the statutory requirement to conform to the SIP. Id. In the 2006 EDF decision, the court also referred to its earlier decision in *Environmental Defense Fund* v. *EPA,* 82 F.3d. 451 (D.C. Cir. 1996), in which it rejected a challenge to EPA's 1993 conformity regulations for similar reasons. In the 2006 EDF decision, the court noted that it had previously decided a similar issue in the 1996 EDF opinion, in which it "agreed with EPA 'that plans and improvement programs may contribute to emissions reductions by avoiding or reducing increases in emissions over the years,' because although the statute 'require[d] reductions in [several pollutants],' it 'd[id] not require that the emissions come entirely from mobile sources'[.]" *EDF* v. *EPA,* 467 F.3d at 1338. Thus, the 2006 EDF decision was the second time the D.C. Circuit rejected the same

[44] Hot-spot analyses must be based on the latest data and models under 40 CFR 93.109(b), 93.111, and 93.123, and therefore any growth in other emissions sources or the impact of new or existing emissions controls (including those in any required SIP) would always be considered in a hot-spot analysis prior to approving a project.

[45] This requirement is in section 93.116(b) of the conformity rule.

argument commenters raise here. The fact that the 1996 and 2006 D.C. Circuit decisions addressed transportation plans and TIPs, rather than individual projects, is not relevant because the court's analysis of what section 176(c)(1) requires applies equally to transportation plans, TIPs, and individual projects, since section 176(c) imposes the same requirements for all three, and contains no additional or different requirements for individual projects.

In its 2007 decision in *Environmental Defense* v. *EPA,* the court for a third time upheld EPA's interpretation that a transportation project that does not increase violations of the NAAQS conforms to the SIP's purpose of eliminating or reducing the severity and number of NAAQS violations and achieving expeditious attainment of the NAAQS, even if the project does not itself achieve emissions reductions. 509 F.3d 553, 560 (DC Cir. 2007). In that decision, the court did remand to EPA for further explanation the issue of whether section 176(c)(1)(B)(iii) applies to hot-spot analyses, and if it does, how its conditions are to be met. Today's final rule responds to that remand. As explained below, EPA interprets section 176(c)(1)(B)(iii) as applying to hot-spot analyses, and the requirements of the regulations as amended in today's action will ensure that transportation projects do not interfere with timely attainment of the NAAQS or any interim milestones.

Section 176(c)(1) prohibits federal agencies from supporting, providing financial assistance for, licensing, permitting, or approving any activity that does not conform to an approved SIP. This provision defines "conformity to a SIP" to mean (1) conformity to the SIP's purpose of eliminating or reducing the severity and number of NAAQS violations and achieving expeditious attainment of the NAAQS, (2) that the activity will not cause or contribute to any new violation of the NAAQS in any area, (3) that the activity will not increase the frequency or severity of any existing NAAQS violation in any area, and (4) that the activity will not delay timely attainment of any NAAQS or interim milestones. Commenters focus on the fourth requirement above—that an activity will not delay timely attainment of any NAAQS or any interim milestones—to support their argument that EPA's May 2009 proposal is inconsistent with the CAA because it would allow a new or expanded transportation project to conform to the SIP if the project does not achieve attainment of the NAAQS. EPA disagrees with the commenters' assertion.

EPA first notes that two of the four elements in the statutory definition of "conformity to an implementation plan" contain some redundancy. Section 176(c)(1)(A) states that "conformity to an implementation plan" means conformity to the SIP's purpose of eliminating or reducing the severity and number of NAAQS violations and achieving expeditious attainment of the NAAQS. Section 176(c)(1)(B)(iii) states that conformity to the SIP means that the transportation activity will not delay timely attainment of the NAAQS or any interim milestones. Both of these criteria seek to ensure attainment of the SIP in a timely manner—by requiring that projects not delay timely attainment or any interim milestones in any area and thereby ensuring expeditious attainment of the NAAQS. If a project conforms to the SIP's purpose of achieving expeditious attainment of the NAAQS, it cannot be delaying timely attainment of the NAAQS, since "expeditious attainment" would require attainment at least as early as would "timely attainment." "Expeditious" means "characterized by speed and efficiency," whereas "timely" is defined as "before a time limit expires" or "done or happening at the appropriate or proper time." [46] Thus, EPA is not reading section 176(c)(1)(B)(iii) out of the statute, as commenters assert, but is instead reading it in conjunction with a closely related provision which also addresses projects' relationship to attainment of the NAAQS.

Further, the regulatory requirements for hot-spot analyses meet the requirement that a project not delay timely attainment of the NAAQS or any interim milestones. See 40 CFR 93.123(c). The hot-spot analysis must evaluate air quality concentrations resulting from emissions from the project and the future background pollutant concentrations. Such concentrations must be examined at receptor locations in the localized area substantially affected by the project. Future background concentrations at the project location are based on either available monitoring data near the project location, or when such information is not available, the latest information must be used as determined through the interagency consultation process (40 CFR 93.105(c)(1)(i)). Based on a review of the available data, the hot-spot analysis must include future expected air quality concentrations at the project location. The concentrations must then be compared to the NAAQS and the project will conform to the SIP only if it can be shown that the project does not cause or contribute to any new localized violations, increase the frequency or severity of any existing violations, or delay timely attainment of any NAAQS or any interim milestones. See 40 CFR 93.116(a). The fact that the regulations provide that these criteria are met if, during the time frame of the transportation plan, (1) no new local violations will be created, (2) the severity or number of existing violations will not be increased as a result of the project, and (3) the project has been included in a regional emissions analysis that meets applicable §§ 93.118 and/or 93.119 requirements does not mean that the project may delay timely attainment of the NAAQS and still be found to conform.

Specifically, commenters assert that the requirement that a project must be included in a regional emissions analysis does not suffice to ensure that it will not delay timely attainment of the NAAQS, because the regional emissions analysis is based on the approved SIP, and EPA's SIP guidance does not require states to model the incremental impact of highway emissions in the ambient air near highways or to develop control strategies to remedy near-highway NAAQS violations. Commenters assert that only if EPA were to modify its SIP guidance accordingly would it be reasonable to interpret section 176(c)(1)(B)(iii) as EPA has done in the proposed rule. Commenters also state that section 176(c)(1)(B)(iii) requires some remedial action to be taken if a NAAQS violation is projected after the attainment deadline, even if the project itself does not adversely affect emissions. EPA disagrees. First, EPA notes that any comments requesting that EPA revise its regulations and/or policies regarding establishment of the $PM_{2.5}$ NAAQS, designation of $PM_{2.5}$ nonattainment areas and development of $PM_{2.5}$ SIPs are beyond the scope of this rulemaking. Further, the requirement that a project is included in a regional emissions analysis, in conjunction with the other requirements of § 93.116(a) and the requirements of § 93.123, is sufficient to ensure that transportation projects do not delay timely attainment of the NAAQS as explained below. And finally, as described above, the DC Circuit has already held that a project need not achieve additional emissions reductions needed to attain the NAAQS in order to conform to the SIP.

The approved SIP for a nonattainment area contains the control measures and emissions projections that demonstrate

[46] Definitions from Webster's On-line Dictionary, *see http://www.websters-online-dictionary.org/.*

attainment of the NAAQS by the required attainment date, including the motor vehicle emissions budget that defines the upper limit of transportation sector emissions above which attainment could be delayed. Therefore, a project will not delay attainment beyond the required date if its transportation emissions (along with all other transportation emissions) are included in a conformity analysis that meets the SIP budgets in the attainment year and all other future years. Commenters point to EPA's statement in the preamble to the 2006 $PM_{2.5}$ hot-spot rule that $PM_{2.5}$ SIP modeling is unlikely to be performed at the level of detail necessary to identify $PM_{2.5}$ hot-spots to support their assertion that EPA cannot rely on the regional emissions analysis as part of the hot-spot analysis. However, that statement in the 2006 preamble is taken out of context by commenters. The original statement was part of EPA's explanation for not finalizing a proposed option for which projects need a PM_{10} or $PM_{2.5}$ hot-spot analysis (rather than how the analysis is actually completed). In the 2006 rule, EPA did not finalize the proposed option to require hot-spot analyses only in the cases where the SIP identifies projects of local air quality concern.[47] The 2006 statement was not, as suggested by commenters, a judgment on the value of the regional emissions analysis that supports a conformity determination. EPA continues to believe that regional conformity analyses are critical to meeting all of section 176(c)(1) requirements for project-level conformity determinations, in conjunction with hot-spot analyses of emissions resulting from the project in the local affected area along with other future expected emissions in that area. Rather, it only indicates EPA's view that SIP modeling is unlikely to identify all locations that warrant a hot-spot analysis.

Moreover, in addition to demonstrating that the project is consistent with the regional emissions analysis (which supports the budget), there can be no new local violations and the severity or number of existing violations cannot increase as a result of the project. In practice, EPA's regulations will ensure that any project that creates a new violation or worsens an existing violation of the NAAQS in the local area affected by the project (either by increasing the number of violations or the severity of an existing violation) will not be found to conform. A project will be found to conform only if it is demonstrated that the project will not adversely impact air quality concentrations in the affected local area, and has been included in a regional emissions analysis that meets the rule's conformity test requirements. Therefore, for the reasons explained above, EPA is finalizing the proposed regulations, which will ensure that project-level conformity determinations will comply with all the statutory criteria in section 176(c)(1)(A) and (B).

EPA has responded to other comments related to the hot-spot provisions at the end of this section, below.

2. Requirement for No Delay in Timely Attainment of the NAAQS

The provisions of today's final rule clarify that a project will meet CAA section 176(c)(1)(B)(iii) requirements not to delay timely attainment as long as no new or worsened violations are predicted to occur, which is already required under the existing hot-spot requirements. While overall emissions can increase in a local area above those expected without a new project's implementation, a project will not delay timely attainment if air quality concentrations continue to meet federal air quality NAAQS or any violations of the NAAQS are not worsened.

Furthermore, in the case where the analysis shows that air quality concentrations are above the NAAQS, a project would not delay timely attainment if air quality is improved or unchanged from what would have occurred without the new project's implementation. In other words, even where air quality concentrations are above the NAAQS, a project does not delay timely attainment if it improves air quality associated with a violation that existed prior to completion of the project, or does not increase such violation. In this case, the project also would still meet section 176(c)(1)(B)(i) and (B)(ii), in that it does not cause or worsen an existing violation.

For example, suppose a hot-spot analysis is performed for a new highway project that is predicted to significantly increase the number of diesel trucks from what is expected in the local area without the project. A year is chosen in this example to analyze when peak emissions from the project are expected and future air quality is most likely to be impacted due to the cumulative impacts of the project and background emissions in the project area. Under the conformity rule, both as it existed and as it is amended today, the project would meet section 176(c)(1)(B)(iii) requirements not to delay timely attainment in the local project area as long as the project's new emissions do not create new violations or worsen existing violations in the local project area. Such a demonstration would examine the total impact of the project's new emissions in the context of the future transportation system, any expected growth in other emissions sources, and any existing or new control measures that are expected to impact the local project area. If the hot-spot analysis demonstrated that the proposed project would improve or not impact air quality, then timely attainment would also not be delayed from what would have occurred without the project. If a violation still exists with the project, but the project itself improves or does not change air quality, it does not delay timely attainment and it can conform. In contrast, if such a project increased emissions enough to cause a new violation or worsen an existing violation in the local project area, then the project would delay timely attainment, since worsening air quality above the NAAQS would impede the ability to attain in the local project area. In such a case, the project could not be found to conform until the new or worsened future violation was mitigated.

3. Requirement for No Delay in Timely Attainment of Any Required Interim Reductions or Milestones

Today's final rule also ensures that a project would meet CAA section 176(c)(1)(B)(iii) requirements for no delay in the timely attainment of any required interim reductions or other milestones. EPA interprets "any required interim emission reductions or other milestones" to refer to CAA requirements associated with reductions and milestones addressed by reasonable further progress SIPs, rather than other reductions required for other purposes. However, EPA believes there is added value in referencing in section 93.116(a) the conformity requirement that a project be consistent with the budgets and control measures in any applicable SIP, not just reasonable further progress SIPs. Therefore, the provisions of today's final rule clarify that this requirement is satisfied in the local project area if a project is consistent with the motor vehicle emissions budget(s) and control measures in the applicable SIP or interim emission test(s) (in the absence of a SIP budget). Although such a demonstration is already required under the current rule, EPA's reference to the requirements in 40 CFR 93.118 and 93.119 clarify that a project's emissions—when combined

[47] Under 40 CFR 93.123(b)(1), EPA has identified projects of local air quality concern that require a localized hot-spot analysis. These projects include all new or expanded highway projects that have a significant number of or a significant increase in diesel vehicles).

with all other emissions from all other existing and other proposed transportation projects—must be consistent with any applicable required interim reductions and milestones.

Today's final rule also supports the implementation of control measures that are relied upon in reasonable further progress demonstrations and could impact air quality in the local project area. Under today's final rule, control measures that are relied upon for reasonable further progress SIPs must have sufficient state and local commitments to be included in a regional emissions analysis or a hot-spot analysis. If the implementation of a control measure is not assured, then such reductions cannot be included in the regional emissions analysis for the entire nonattainment or maintenance area (40 CFR 93.122(a)) or within the local project area considered in a hot-spot analysis (40 CFR 93.123(c)(3) and (4)), and conformity may not be demonstrated for a project. EPA believes that these requirements also ensure that "any required interim emissions reductions or other milestones" are not delayed within a local project area as a result of a single project's emissions.

For example, a project may not meet CAA section 176(c)(1)(B)(iii) requirements if SIP control measures were not being implemented as expected and as a result, a project's emissions (when combined with expected future emissions without the SIP control measures) caused a new violation or worsened an existing violation in the local project area. In such a case, additional control measures as part of the conformity determination may be required in order to offset any emissions increases from a project.

Today's final rule also clarifies that all CAA section 176(c)(1)(B)(iii) requirements are met when air quality improves as a result of the project, *e.g.,* an existing air quality violation that would have occurred without the project is estimated to be reduced or eliminated if the new project were implemented. EPA believes that all of section 176(c)(1)(B) requirements would be met in the local project area in such a case since the Act requires that individual projects do not worsen air quality or affect an area's ability to attain or achieve interim requirements. Certainly, if air quality improves in the local project area with the implementation of a new project, EPA believes that timely attainment and required reasonable further progress interim requirements are not delayed. In fact, the opposite would be true in such a case, since future air quality would be improved and attainment possibly expedited from what would have occurred without the project's implementation.

4. Other Comments

EPA is including responses to other relevant comments on this portion of today's rule below.

Comment: One commenter thought that based on the statutory language in CAA 176(c)(1)(A) and (B), promulgating rules that require $PM_{2.5}$ emission reductions would be permissible and reasonable. Another commenter believed that EPA had not responded to the court's remand, since it was not expanding on existing conformity rule requirements for hot-spot analyses.

Response: As explained above, EPA disagrees that section 176(c)(1) requires projects to reduce emissions. As such, EPA believes its interpretation of these provisions is the most reasonable one. Hot-spot analyses in $PM_{2.5}$ (and PM_{10}) nonattainment and maintenance areas are required for transportation projects of local air quality concern. Such projects are those highway and transit projects that involve significant diesel traffic, significant increases in diesel traffic, or significant numbers of diesel vehicles congregating in one location. These types of projects are unlikely to improve air quality in and of themselves.

The structure of section 176(c) supports EPA's interpretation as the most reasonable interpretation of the statutory language. The conformity provisions of the CAA in 176(c)(1)(A) and (B) do not require that transportation activities reduce emissions, only that they be consistent with the purpose of the SIP. Only in the specific provision of 176(c)(3)(A)(iii) does the statute require transportation projects to "contribute to annual emissions reductions," and this requirement applies to projects only in certain CO areas before such areas have a SIP, not generally to all projects. Had Congress intended for projects subject to sections 176(c)(1)(A) and (B) to "contribute to annual emissions reductions," it would have included explicit language stating so, as it did in section 176(c)(3). See further details in our general rationale earlier in this section.

Comment: One commenter requested that EPA add language to the conformity rule that prescribes procedures for requesting assistance from the air quality agency in developing offsetting emissions reductions, to reduce air quality concentrations at appropriate receptor locations to levels that attain the NAAQS on or after the attainment deadline.

Response: EPA does not believe additional language is necessary because existing requirements adequately address the state air agency's involvement in developing offsetting measures. First, the existing regulation at 40 CFR 93.123(c)(4) states: "CO, PM_{10}, or $PM_{2.5}$ mitigation or control measures shall be assumed in the hot-spot analysis only where there are written commitments from the project sponsor and/or operator to implement such measures, as required by § 93.125(a)."[48] The air quality agency as well as EPA has the opportunity to review any such written commitments during interagency consultation on the conformity determination per 40 CFR 93.105(c). Second, if offsetting measures are added to the SIP, then the state air quality agency would have to agree on these measures. In addition, the development of offsetting emissions reductions would be subject to the public process required for a SIP revision. Third, in the case where a new transportation control measure (TCM) is to be added to the SIP without a full SIP revision, the CAA requires the TCM to be developed through a collaborative process that includes the state air quality agency; in addition, the state air quality agency as well as EPA must concur before such a TCM is added to the SIP. See EPA's guidance, entitled, "Guidance for Implementing the Clean Air Act Section 176(c)(8) Transportation Control Measure Substitution and Addition Provision," found on EPA's Web site at: *http://www.epa.gov/otaq/stateresources/transconf/policy/420b09002.pdf.*

Comment: One commenter thought the regulations at 40 CFR 93.116(a) and 93.123 are unclear regarding the specifics of performing a PM hot-spot analysis, including whether the conformity rule requires a comparison of emissions from the build case with the emissions from the no-build case in the same future year, or whether it allows a comparison of the build case with emissions in the current year as the baseline. The commenter was concerned that if the analysis is based on a comparison of the build case for a future

[48] In addition, the conformity rule at 40 CFR 93.101 defines "written commitment" as follows: "Written commitment for the purposes of this subpart means a written commitment that includes a description of the action to be taken; a schedule for the completion of the action; a demonstration that funding necessary to implement the action has been authorized by the appropriating or authorizing body; and an acknowledgement that the commitment is an enforceable obligation under the applicable implementation plan." Since these obligations are "an enforceable obligation under the applicable implementation plan," state air agencies will have a role in ensuring that any necessary measures are properly implemented and enforced.

year with current emissions, a project could conform even if it adds more vehicle trips to the project location, because the build analysis would include the effect of new engine control technologies and fleet turnover. The commenter believes that the analysis should examine the impacts of the project itself. Therefore, the commenter urged that the rule be clarified to require an estimate of future peak year emissions using a build/no-build analysis, which the commenter asserted would provide a lawful basis for assessing the impact of emissions from a proposed project.

Response: This comment is beyond the scope of this rulemaking. For purposes of EPA's hot-spot regulations, EPA is only addressing in today's rule the specific issue that was remanded by the Court in December 2007, *i.e.,* whether CAA section 176(c)(1)(B)(iii) applies in the local area affected by a project. As stated in the May 2009 proposal, EPA did not propose or seek public comment on any other aspect of EPA's preexisting rules for performing hot-spot analyses under 40 CFR 93.123 or any other parts of the conformity rule.

In addition, EPA has already addressed how hot-spot analyses are to be conducted to avoid the situation described by the commenter. In the original conformity rule, EPA stated its intentions for applying the hot-spot requirement—"that the hot-spot analysis compare concentrations with and without the project based on modeling of conditions in the analysis year." (58 FR 62212). The July 2004 final rule clarified the horizon years for hot-spot analyses. In this rule, EPA stated that "[t]o ensure that the requirement for hot-spot analysis is being satisfied, areas should examine the year(s) within the transportation plan or regional emissions analysis, as appropriate, during which peak emissions from the project are expected and a new violation or worsening of an existing violation would most likely occur due to the cumulative impacts of the project and background regional emissions in the project area." See 69 FR 40056–58 for more details on this rulemaking.

Furthermore, EPA agrees that it would be inappropriate to ignore the future air quality impacts from building a proposed project. As stated above, EPA's rule requires that in the future year(s) where emissions are expected to be the highest, the concentrations of the pollutant that result from the project's emissions in combination with background emissions from other sources are compared to the NAAQS. However, this analysis is performed by examining future air quality impacts from a project, rather than comparing emissions from the project in the future to emissions in a baseline year. EPA strongly disagrees that the current rule can be interpreted in this way. An analysis under the rule does provide a lawful basis for assessing the impact of emissions from a proposed project, because it compares resulting air quality concentrations to the NAAQS, which by law are established by EPA through rulemaking.

As stated above, in the case where the analysis shows that the air quality concentrations are greater than the NAAQS, the project may still be able to conform. If building the project leads to improved air quality concentrations over not building the project, then the project could still be found to conform, even if the concentrations are above the NAAQS. In this case, a build/no-build analysis would show that the project is helping to reduce concentrations, and improve air quality by reducing a future violation. In this case, the project neither creates a new violation nor worsens an existing violation, nor does it delay timely attainment.

Last, it is entirely appropriate that a hot-spot analysis include the effects of new technologies and fleet turnover that is expected to occur in a future analysis year. The conformity rule has always allowed the future effects of federal vehicle emissions standards, fleet turnover, fuel programs, and other control measures to be reflected in hot-spot analyses when they are assured to occur, because including such effects provides a reasonable estimate of future emissions that is more accurate than not including such effects.

Comment: One commenter opined that off-road emissions that result from a transportation project being built should be included in the hot-spot analysis as part of the background emissions, because the conformity regulations at 40 CFR 93.123(c) require them to be included: "[e]stimated pollutant concentrations must be based in the total emissions burden which may result from the implementation of the project." The commenter asserted that a highway project that facilitates additional diesel vehicles such as ocean-going vessels, locomotives, harborcraft, and cargo-handling equipment cannot ignore these significant sources of emissions that affect the air quality at the location of the project.

Response: This comment is outside the scope of today's rulemaking for the reasons discussed above. However, EPA notes that it agrees with this comment. As the commenter points out, the regulations at 40 CFR 93.123(c)(1) state: "Estimated pollutant concentrations must be based on the total emissions burden which may result from the implementation of the project, summed together with future background concentrations." EPA agrees that if a highway project will facilitate additional diesel ships or locomotives, these additional non-road emissions must be included as part of the background concentrations in the hot-spot analysis. The current conformity rule also requires hot-spot analyses to consider any emissions that are already expected to occur from other sources in the local project area, in addition to any emissions created by the project being built.

Comment: One commenter suggested that hot-spot analyses should apply to existing projects, not just new projects, and that the language of CAA section 176(c) would support "an ongoing duty" to ensure compliance with the hot-spot rule. To the extent that the federal government "engage[s] in" or "supports" a facility, the commenter believed that a hot-spot analysis is required. For example, when the government provides funds for maintenance and repair of freight facilities, the commenter believed there should be an ongoing requirement to perform a hot-spot analysis.

Response: This comment is outside the scope of today's action. EPA did not propose or seek comment on any revision to the hot-spot regulations addressing when hot-spot analyses are required. Since the original 1993 transportation conformity rule, EPA's hot-spot requirements have applied only to those projects that require project-level conformity determinations under 40 CFR 93.102(a) and 93.104(d), which are those new non-exempt highway and transit projects that receive FHWA or FTA funding or approval. After that point, conformity of a project does not need to be redetermined unless one of three things occur: (1) The project's design concept and scope significantly changes; (2) three years elapse since the most recent major step to advance the project; or (3) a supplemental environmental document has been initiated for air quality purposes (40 CFR 93.104(d)). EPA has previously concluded that a new project-level conformity determination is warranted in these cases. Barring one of these cases, it is reasonable to conclude that conformity continues to be demonstrated, based on both the initial project-level conformity determination as well as the periodic regional conformity determination needed for the transportation plan and TIP, which

includes the project. Today's final rule addresses none of these requirements.

Comment: One commenter stated that the proposed rule is inconsistent with EPA's definition for "hot-spot analysis" and the CAA because the proposed rule fails to require a comparison of localized $PM_{2.5}$ concentrations to the NAAQS. The commenter opines that EPA's regulatory definition is consistent with the statutory text but the proposed rule is not in that it fails to expressly require that, where emissions from a highway project subject to hot-spot review would cause or contribute to NAAQS violations after the attainment deadline, approval of the project must be prohibited unless some remedial action is taken to avoid the NAAQS violation after the attainment deadline.

The same commenter also stated that EPA's proposal is not consistent with the CAA because it would allow a project to conform even if emissions are maintained at levels that will continue to cause NAAQS violations after the statutory deadline.

Response: EPA disagrees with this commenter and the description of the May 2009 proposal. Today's final rule does require a comparison of localized pollutant concentrations to the NAAQS. By requiring a demonstration that no new local violations are created and no existing violations are worsened, the regulation does require a comparison to the NAAQS. In addition, today's final rule would not result in the outcome in the example provided by commenters. As stated earlier, a project could not be found to conform if its emissions caused or contributed to a future NAAQS violation.

In the commenter's second example, the project could be found to conform, since the project's emissions would not have caused or worsened a NAAQS violation. If a hot-spot analysis shows that air quality concentration levels would be the same with and without a project, then such a project would not be 'maintaining' any NAAQS violation, as suggested by the commenter. Instead, such a hot-spot analysis would show that a project is not the cause or contributor to the local area's air quality problem, and consequently, the project would not be delaying timely attainment. See other parts of today's final rule preamble for rationale on similar comments.

Comment: One commenter requested that EPA add a definition to the conformity rule for the term "delay timely attainment." The commenter requested that the term be defined as follows: If emissions from a project are expected to cause or contribute to concentrations that are greater than the NAAQS at appropriate receptor locations after the attainment deadline, the project would fail to meet CAA 176(c)(1)(B)(iii).

Response: EPA does not believe it is necessary to promulgate a separate regulatory definition of the term "delay timely attainment" in section 93.101 of the conformity rule. Section 93.116(a) of today's final rule and section 93.123(c) of the existing conformity rule include this regulatory text, and the discussion in this preamble and earlier preambles to transportation conformity regulations adequately explain the meaning of "delay timely attainment" in the context of section 176(c)(1)(B)(iii), including how the hot-spot analysis must comply with that provision.

Comment: One commenter requested that EPA define "local area" for hot-spot analysis purposes, because neither the proposed nor existing conformity rule clearly defines it. The commenter opined that depending upon the definition, the results of the analysis might be different. As an example, the commenter indicated that a project such as a bus terminal might result in increased emissions in the immediate area (although not enough to violate other portions of section 176(c)(1)(B)), but may be part of a larger group of projects that would reduce emissions overall in a larger area.

Response: EPA agrees that PM hot-spot analyses under the conformity rule must examine the air quality impacts of the PM_{10} and $PM_{2.5}$ NAAQS, including the area immediately surrounding the project. In developing the March 2006 final PM hot-spot rule, EPA completed a thorough review of more than 70 studies representing a cross-section of available studies looking at particle concentrations near roadways and transit projects (71 FR 12472–12474). Many of these studies were completed in the types of local communities cited by the commenter.

However, EPA is not defining "local area" in this final rule because the existing conformity rule, along with previous conformity preambles, provide the necessary information for hot-spot analyses. First, the rule's "hot-spot analysis" provisions are applied at a local level to an individual "highway project" or "transit project," and the rule defines all three of these terms in detail (see 40 CFR 93.101). As a result, the hot-spot requirements for individual projects in conformity rule sections 93.116 and 93.123 are applied within the local project area. Another example is the rule's definition of "cause or contribute to a new violation," which includes the phrase about this requirement being met "in an area substantially affected by the project." EPA believes that all of the conformity rule's hot-spot provisions provide adequate information regarding what is a "local area," and a separate "local area" definition is not necessary or required by the December 2007 court remand.

EPA does not believe that "local area" can be more specifically defined and still be appropriate for all projects, because projects where a hot-spot analysis is needed can differ in type, location, scale, scope, and neighboring populations. EPA believes that the existing regulation allows the appropriate local area to be determined in a hot-spot analysis.

EPA also notes that in the commenter's example, a bus terminal increases emissions in the immediate area but does not violate other portions of section 176(c)(1)(B), i.e., this project increases emissions but would not create a new violation or worsen an existing NAAQS violation. Therefore, this project could be found to conform under the PM hot-spot conformity rules.

Comment: One commenter requested that EPA define "appropriate receptor location" in section 93.123(c)(1) of the conformity rule to be "locations near the project where the public has daily access and where exposure risks will be greatest with regard to the frequency or severity." The commenter stated that the rule should clarify that receptor or monitor locations should not be located outside the zone of observed highway impacts because at those distances no difference would be detected regardless of how many additional vehicles are added. The commenter cited examples of past PM hot-spot analyses where emissions impacts were examined at monitors or locations that were a mile and a half or more from the highway or from the residential and school facilities adjacent to the proposed project. The commenter stated that in both cases, evidence was submitted showing that highway emissions decrease to the level of regional background within the first 300 meters.

In addition, this and another commenter provided EPA with recent studies and data illustrating the air quality impacts of highways in the near-highway environment, and with data tallying the millions of people who live within this range as well as the number of schools located within it.

Response: EPA appreciates the data that commenters provided, and agrees with commenters that hot-spot analyses are important to ensure that public health is protected. As noted in the previous response, EPA finalized the PM_{10} and $PM_{2.5}$ hot-spot requirements based on the type of information

submitted by commenters (71 FR 12472–12474). However, the location of modeling receptors, which is addressed in 40 CFR 93.123(c), is outside the scope of today's final rule.

EPA also notes that the U.S. District Court in Maryland has upheld the appropriateness of one of the PM qualitative hot-spot analyses cited by the commenter (*Audubon Naturalist Society of the Central Atlantic States, Inc., et al* v. *USDOT, et al.,* 524 F.Supp.2d 642 (Md. 2007), appeal dismissed without decision Environmental *Defense, et al.* v. *USDOT, et al.,* No. 08–1107 (4th Cir., dismissed Nov. 17. 2008)).

EPA intends to describe appropriate receptor locations in its forthcoming quantitative PM hot-spot guidance, which is required under 40 CFR 93.123(b)(4). Interested parties will have an opportunity to comment on this document before it is finalized.[49]

Comment: One commenter recommended that EPA require projects to reduce the severity and number of local 2006 $PM_{2.5}$ NAAQS violations as a way to reduce black carbon. This commenter noted that in EPA's recent proposed endangerment finding for greenhouse gases, EPA explained that it did not include black carbon because EPA is addressing black carbon through its review of the primary and secondary PM NAAQS. This commenter cited a large body of new science explaining black carbon's climate forcing effect and impacts on sensitive ecosystems, and believed that this rule should include some specific requirements for black carbon.

Response: Transportation conformity applies only to transportation-related criteria pollutants for which a NAAQS is established and their precursor pollutants as described in 40 CFR 93.102(b) of the regulation. There is no NAAQS specifically for black carbon, therefore EPA lacks authority to require conformity analysis specifically for black carbon. To the extent that black carbon is a component of $PM_{2.5}$ (as defined by 40 CFR 93.102(b)(1) and EPA's rulemakings for the development of any $PM_{2.5}$ NAAQS), it is included as part of any conformity analysis for $PM_{2.5}$.

[49] EPA will provide opportunity for public comment on the PM quantitative hot-spot guidance according to the terms of a settlement agreement with Environmental Defense, Natural Resources Defense Council, and Sierra Club. Refer to the June 22, 2007 "Notice of proposed settlement agreement; request for public comment" at 72 FR 34460.

X. Statutory and Executive Order Reviews

A. Executive Order 12866: Regulatory Planning and Review

This action is not a "significant regulatory action" under the terms of Executive Order (EO) 12866, (58 FR 51735; October 4, 1993) and is therefore not subject to review under the EO.

B. Paperwork Reduction Act

This action does not impose any new information collection burden. The information collection requirements of EPA's existing transportation conformity regulations and the proposed revisions in today's action are already covered by EPA information collection request (ICR) entitled, "Transportation Conformity Determinations for Federally Funded and Approved Transportation Plans, Programs and Projects." The Office of Management and Budget (OMB) has previously approved the information collection requirements contained in the existing regulations at 40 CFR Part 93 under the provisions of the Paperwork Reduction Act, 44 U.S.C. 3501 *et seq.* and has assigned OMB control number 2060–0561. The OMB control numbers for EPA's regulations in 40 CFR are listed in 40 CFR Part 9.

C. Regulatory Flexibility Act

The Regulatory Flexibility Act (RFA) generally requires an Agency to prepare a regulatory flexibility analysis of rules subject to notice and comment rulemaking requirements under the Administrative Procedure Act or any other statute unless the Agency certifies that the rule will not have a significant economic impact on a substantial number of small entities. Small entities include small businesses, small not-for-profit organizations and small government jurisdictions.

For purposes of assessing the impacts of today's rule on small entities, small entity is defined as: (1) A small business as defined by the Small Business Administration's (SBA) regulations at 13 CFR 121.201; (2) a small governmental jurisdiction that is a government of a city, county, town, school district or special district with a population of less than 50,000; and (3) a small organization that is any not-for-profit enterprise that is independently owned and operated and is not dominant in its field.

After considering the economic impacts of today's final rule on small entities, I certify that this action will not have a significant economic impact on a substantial number of small entities. This regulation directly affects federal agencies and metropolitan planning organizations that, by definition, are designated under federal transportation laws only for metropolitan areas with a population of at least 50,000. These organizations do not constitute small entities within the meaning of the Regulatory Flexibility Act.

D. Unfunded Mandates Reform Act

This rule does not contain a Federal mandate that may result in expenditures of $100 million or more for State, local, and tribal governments, in the aggregate, or the private sector in any one year. The purpose of this final rule is to amend the conformity rule to clarify how certain highway and transit projects meet statutory conformity requirements for particulate matter in response to a December 2007 court ruling, and to update the regulation to accommodate revisions to the PM_{10} and $PM_{2.5}$ NAAQS. This final rule merely implements already established law that imposes conformity requirements and does not itself impose requirements that may result in expenditures of $100 million or more in any year. Thus, today's final rule is not subject to the requirements of sections 202 and 205 of the UMRA.

This rule is also not subject to the requirements of section 203 of UMRA because it contains no regulatory requirements that might significantly or uniquely affect small governments. This rule will not significantly or uniquely impact small governments because it directly affects federal agencies and metropolitan planning organizations that, by definition, are designated under federal transportation laws only for metropolitan areas with a population of at least 50,000.

E. Executive Order 13132: Federalism

This final rule does not have federalism implications. It will not have substantial direct effects on states, on the relationship between the national government and states, or on the distribution of power and responsibilities among the various levels of government, as specified in Executive Order 13132. The CAA requires conformity to apply in certain nonattainment and maintenance areas as a matter of law, and this action merely establishes and revises procedures for transportation planning entities in subject areas to follow in meeting their existing statutory obligations. Thus, Executive Order 13132 does not apply to this rule.

F. Executive Order 13175: Consultation and Coordination With Indian Tribal Governments

This action does not have tribal implications, as specified in Executive Order 13175 (65 FR 67249, November 9, 2000). The CAA requires transportation conformity to apply in any area that is designated nonattainment or maintenance by EPA. This rule amends the conformity rule to clarify how certain highway and transit projects meet statutory conformity requirements for particulate matter in response to a December 2007 court ruling, and updates the conformity rule to accommodate revisions to the PM_{10} and $PM_{2.5}$ NAAQS. Because today's amendments to the conformity rule do not significantly or uniquely affect the communities of Indian tribal governments, Executive Order 13175 does not apply to this action.

G. Executive Order 13045: Protection of Children From Environmental Health and Safety Risks

This final rule is not subject to Executive Order 13045 62 FR 19885, April 23, 1997) because it is not economically significant as defined in Executive Order 12866, and because the Agency does not believe the environmental health or safety risks addressed by this action present a disproportionate risk to children.

H. Executive Order 13211: Actions Concerning Regulations That Significantly Affect Energy Supply, Distribution, or Use

This action is not a "significant energy action" as defined in Executive Order 13211 (66 FR 18355 (May 22, 2001)), because it is not likely to have a significant adverse effect on the supply, distribution, or use of energy. It does not create a serious inconsistency or otherwise interfere with an action taken or planned by another agency regarding energy. Further, this rule is not likely to have any adverse energy effects because it does not raise novel legal or policy issues adversely affecting the supply, distribution or use of energy arising out of legal mandates, the President's priorities, or the principles set forth in Executive Orders 12866 and 13211.

I. National Technology Transfer and Advancement Act

Section 12(d) of the National Technology Transfer and Advancement Act of 1995 ("NTTAA"), Public Law 104–113, section 12(d) (15 U.S.C. 272 note) directs EPA to use voluntary consensus standards in its regulatory activities unless to do so would be inconsistent with applicable law or otherwise impractical. Voluntary consensus standards are technical standards (*e.g.,* material specifications, test methods, sampling procedures, and business practices) that are developed or adopted by voluntary consensus standards bodies. NTTAA directs EPA to provide Congress, through OMB, explanations when the Agency decides not to use available and applicable voluntary consensus standards.

This action does not involve technical standards. Therefore, EPA did not consider the use of any voluntary consensus standards.

J. Executive Order 12898: Federal Actions To Address Environmental Justice in Minority Populations and Low-Income Populations

Executive Order (EO) 12898 (59 FR 7629 (Feb. 16, 1994)) establishes federal executive policy on environmental justice. Its main provision directs federal agencies, to the greatest extent practicable and permitted by law, to make environmental justice part of their mission by identifying and addressing, as appropriate, disproportionately high and adverse human health or environmental effects of their programs, policies, and activities on minority populations and low-income populations in the United States.

EPA has determined that this final rule will not have disproportionately high and adverse human health or environmental effects on minority or low-income populations because it increases the level of environmental protection for all affected populations without having any disproportionately high and adverse human health or environmental effects on any population, including any minority or low-income population. This final rule simply amends the conformity rule to clarify how certain highway and transit projects meet statutory requirements for particulate matter in response to a December 2007 court ruling, and updates the conformity rule to accommodate revisions to the PM_{10} and $PM_{2.5}$ NAAQS.

K. Determination Under Section 307(d)

Pursuant to CAA Section 307(d)(1)(U), the Administrator determines that this action is subject to the provisions of section 307(d). Section 307(d)(1)(U) provides that the provisions of section 307(d) apply to "such other actions as the Administrator may determine."

L. Congressional Review Act

The Congressional Review Act, 5 U.S.C. 801 *et seq.,* as added by the Small Business Regulatory Enforcement Fairness Act of 1996, generally provides that before a rule may take effect, the agency promulgating the rule must submit a rule report, which includes a copy of the rule, to each House of the Congress and to the Comptroller General of the United States prior to publication of the rule in the **Federal Register.** A major rule cannot take effect until 60 days after it is published in the **Federal Register.** This action Transportation Conformity Rule $PM_{2.5}$ and PM_{10} Amendments

Page 134 of 145 is not a "major rule" as defined by 5 U.S.C. 804(2). This rule will be effective April 23, 2010.

List of Subjects in 40 CFR Part 93

Administrative practice and procedure, Air pollution control, Carbon monoxide, Clean Air Act, Environmental protection, Highways and roads, Intergovernmental relations, Mass transportation, Nitrogen dioxide, Ozone, Particulate matter, Transportation, Volatile organic compounds.

Dated: March 10, 2010.

Lisa P. Jackson,

Administrator.

■ For the reasons set out in the preamble, 40 CFR part 93 is amended as follows:

PART 93—[AMENDED]

■ 1. The authority citation for part 93 continues to read as follows:

Authority: 42 U.S.C. 7401–7671q.

■ 2. Section 93.101 is amended as follows:

■ a. By removing the definitions for "1-hour ozone NAAQS" and "8-hour ozone NAAQS"; and

■ b. By revising the definition of "National ambient air quality standards (NAAQS)".

§ 93.101 Definitions.

* * * * *

National ambient air quality standards (NAAQS) are those standards established pursuant to section 109 of the CAA.

(1) *1-hour ozone NAAQS* means the 1-hour ozone national ambient air quality standard codified at 40 CFR 50.9.

(2) *8-hour ozone NAAQS* means the 8-hour ozone national ambient air quality standard codified at 40 CFR 50.10.

(3) 24-hour PM_{10} NAAQS means the 24-hour PM_{10} national ambient air quality standard codified at 40 CFR 50.6.

(4) *1997 $PM_{2.5}$ NAAQS* means the $PM_{2.5}$ national ambient air quality standards codified at 40 CFR 50.7.

(5) *2006 $PM_{2.5}$ NAAQS* means the 24-hour $PM_{2.5}$ national ambient air quality standard codified at 40 CFR 50.13.

(6) *Annual PM_{10} NAAQS* means the annual PM_{10} national ambient air quality standard that EPA revoked on December 18, 2006.

* * * * *

§ 93.105 [Amended]

■ 3. Section 93.105 is amended in paragraph (c)(1)(vi) by removing the citation "§ 93.109(l)(2)(iii)" and adding in its place "§ 93.109(n)(2)(iii)".

■ 4. Section 93.109 is amended as follows:

■ a. In paragraph (b):

■ i. By removing the citation "(c) through (i)" and adding in its place the citation "(c) through (k)";

■ ii. By removing the reference "(j)" and adding in its place "(l)";

■ iii. By removing the reference "(k)" from the fourth sentence and adding in its place "(m)";

■ iv. By removing the reference "(l)" from the fifth sentence and adding in its place "(n)";

■ b. By revising paragraph (g)(2) introductory text;

■ c. By redesignating paragraph (g)(3) as (g)(4);

■ d. By adding new paragraph (g)(3);

■ e. By revising the heading of paragraph (i);

■ f. By adding the words "such 1997" before the words "$PM_{2.5}$ nonattainment or maintenance areas" in paragraph(i)(1);

■ g. By adding the words "such 1997" before the words "$PM_{2.5}$ nonattainment and maintenance areas" in paragraph (i) introductory text and paragraph (i)(2) introductory text;

■ h. By adding the words "such 1997" before the words "$PM_{2.5}$ nonattainment areas" in paragraph (i)(3);

■ i. By redesignating paragraphs (j), (k), and (l) as (l), (m), and (n), respectively;

■ j. In newly designated paragraph (n)(2) introductory text by removing the citation "(c) through (k)" and adding in its place the citation "(c) through (m)";

■ k. In newly designated paragraph (n)(2)(iii):

■ i. By removing the citation "(l)(2)(ii)" and adding in its place the citation "(n)(2)(ii)";

■ ii. By removing the citation "(l)(2)(ii)(C)" and adding in its place the citation "(n)(2)(ii)(C)";

■ l. By adding new paragraphs (j) and (k).

§ 93.109 Criteria and procedures for determining conformity of transportation plans, programs, and projects: General.

* * * * *

(g) * * *

(2) In PM_{10} nonattainment and maintenance areas where a budget is submitted for the 24-hour PM_{10} NAAQS, the budget test must be satisfied as required by § 93.118 for conformity determinations made on or after:

* * * * *

(3) Prior to paragraph (g)(2) of this section applying, the budget test must be satisfied as required by § 93.118 using the approved or adequate motor vehicle emissions budget established for the revoked annual PM_{10} NAAQS, if such a budget exists.

* * * * *

(i) *1997 $PM_{2.5}$ NAAQS nonattainment and maintenance areas.* * * *

(j) *2006 $PM_{2.5}$ NAAQS nonattainment and maintenance areas without 1997 $PM_{2.5}$ NAAQS motor vehicle emissions budgets for any portion of the 2006 $PM_{2.5}$ NAAQS area.* In addition to the criteria listed in Table 1 in paragraph (b) of this section that are required to be satisfied at all times, in such 2006 $PM_{2.5}$ nonattainment and maintenance areas conformity determinations must include a demonstration that the budget and/or interim emissions tests are satisfied as described in the following:

(1) FHWA/FTA projects in such $PM_{2.5}$ nonattainment and maintenance areas must satisfy the appropriate hot-spot test required by § 93.116(a).

(2) In such $PM_{2.5}$ nonattainment and maintenance areas the budget test must be satisfied as required by § 93.118 for conformity determinations made on or after:

(i) The effective date of EPA's finding that a motor vehicle emissions budget in a submitted control strategy implementation plan revision or maintenance plan for the 2006 $PM_{2.5}$ NAAQS is adequate for transportation conformity purposes;

(ii) The publication date of EPA's approval of such a budget in the **Federal Register;** or

(iii) The effective date of EPA's approval of such a budget in the **Federal Register,** if such approval is completed through direct final rulemaking.

(3) In such $PM_{2.5}$ nonattainment areas the interim emissions tests must be satisfied as required by § 93.119 for conformity determinations made if there is no approved motor vehicle emissions budget from an applicable implementation plan for the 2006 $PM_{2.5}$ NAAQS and no adequate motor vehicle emissions budget from a submitted control strategy implementation plan revision or maintenance plan for the 2006 $PM_{2.5}$ NAAQS.

(k) *2006 $PM_{2.5}$ NAAQS nonattainment and maintenance areas with motor vehicle emissions budgets for the 1997 $PM_{2.5}$ NAAQS that cover all or a portion of the 2006 $PM_{2.5}$ nonattainment area.* In addition to the criteria listed in Table 1 in paragraph (b) of this section that are required to be satisfied at all times, in such 2006 $PM_{2.5}$ nonattainment and maintenance areas conformity determinations must include a demonstration that the budget and/or interim emissions tests are satisfied as described in the following:

(1) FHWA/FTA projects in such $PM_{2.5}$ nonattainment and maintenance areas must satisfy the appropriate hot-spot test required by § 93.116(a).

(2) In such $PM_{2.5}$ nonattainment and maintenance areas the budget test must be satisfied as required by § 93.118 for conformity determinations made on or after:

(i) The effective date of EPA's finding that a motor vehicle emissions budget in a submitted control strategy implementation plan revision or maintenance plan for the 2006 $PM_{2.5}$ NAAQS is adequate for transportation conformity purposes;

(ii) The publication date of EPA's approval of such a budget in the **Federal Register;** or

(iii) The effective date of EPA's approval of such a budget in the **Federal Register,** if such approval is completed through direct final rulemaking.

(3) Prior to paragraph (k)(2) of this section applying, the following test(s) must be satisfied:

(i) If the 2006 $PM_{2.5}$ nonattainment area covers the same geographic area as the 1997 $PM_{2.5}$ nonattainment or maintenance area(s), the budget test as required by § 93.118 using the approved or adequate motor vehicle emissions budgets in the 1997 $PM_{2.5}$ applicable implementation plan or implementation plan submission;

(ii) If the 2006 $PM_{2.5}$ nonattainment area covers a smaller geographic area within the 1997 $PM_{2.5}$ nonattainment or maintenance area(s), the budget test as required by § 93.118 for either:

(A) The 2006 $PM_{2.5}$ nonattainment area using corresponding portion(s) of the approved or adequate motor vehicle emissions budgets in the 1997 $PM_{2.5}$ applicable implementation plan or implementation plan submission where such portion(s) can reasonably be identified through the interagency consultation process required by § 93.105; or

(B) The 1997 $PM_{2.5}$ nonattainment area using the approved or adequate motor vehicle emissions budgets in the 1997 $PM_{2.5}$ applicable implementation plan or implementation plan submission. If additional emissions reductions are necessary to meet the budget test for the 2006 $PM_{2.5}$ NAAQS in such cases, these emissions

reductions must come from within the 2006 $PM_{2.5}$ nonattainment area;

(iii) If the 2006 $PM_{2.5}$ nonattainment area covers a larger geographic area and encompasses the entire 1997 $PM_{2.5}$ nonattainment or maintenance area(s):

(A) The budget test as required by § 93.118 for the portion of the 2006 $PM_{2.5}$ nonattainment area covered by the approved or adequate motor vehicle emissions budgets in the 1997 $PM_{2.5}$ applicable implementation plan or implementation plan submission; and the interim emissions tests as required by § 93.119 for either: the portion of the 2006 $PM_{2.5}$ nonattainment area not covered by the approved or adequate budgets in the 1997 $PM_{2.5}$ implementation plan, the entire 2006 $PM_{2.5}$ nonattainment area, or the entire portion of the 2006 $PM_{2.5}$ nonattainment area within an individual state, in the case where separate 1997 $PM_{2.5}$ SIP budgets are established for each state of a multi-state 1997 $PM_{2.5}$ nonattainment or maintenance area; or

(B) The budget test as required by § 93.118 for the entire 2006 $PM_{2.5}$ nonattainment area using the approved or adequate motor vehicle emissions budgets in the applicable 1997 $PM_{2.5}$ implementation plan or implementation plan submission.

(iv) If the 2006 $PM_{2.5}$ nonattainment area partially covers a 1997 $PM_{2.5}$ nonattainment or maintenance area(s):

(A) The budget test as required by § 93.118 for the portion of the 2006 $PM_{2.5}$ nonattainment area covered by the corresponding portion of the approved or adequate motor vehicle emissions budgets in the 1997 $PM_{2.5}$ applicable implementation plan or implementation plan submission where they can be reasonably identified through the interagency consultation process required by § 93.105; and

(B) The interim emissions tests as required by § 93.119, when applicable, for either: The portion of the 2006 $PM_{2.5}$ nonattainment area not covered by the approved or adequate budgets in the 1997 $PM_{2.5}$ implementation plan, the entire 2006 $PM_{2.5}$ nonattainment area, or the entire portion of the 2006 $PM_{2.5}$ nonattainment area within an individual state, in the case where separate 1997 $PM_{2.5}$ SIP budgets are established for each state in a multi-state 1997 $PM_{2.5}$ nonattainment or maintenance area.

* * * * *

■ 5. Section 93.116 is amended by revising paragraph (a) to read as follows:

§ 93.116 Criteria and procedures: Localized CO, PM_{10}, and $PM_{2.5}$ violations (hot-spots).

(a) This paragraph applies at all times. The FHWA/FTA project must not cause or contribute to any new localized CO, PM_{10}, and/or $PM_{2.5}$ violations, increase the frequency or severity of any existing CO, PM_{10}, and/or $PM_{2.5}$ violations, or delay timely attainment of any NAAQS or any required interim emission reductions or other milestones in CO, PM_{10}, and $PM_{2.5}$ nonattainment and maintenance areas. This criterion is satisfied without a hot-spot analysis in PM_{10} and $PM_{2.5}$ nonattainment and maintenance areas for FHWA/FTA projects that are not identified in § 93.123(b)(1). This criterion is satisfied for all other FHWA/FTA projects in CO, PM_{10} and $PM_{2.5}$ nonattainment and maintenance areas if it is demonstrated that during the time frame of the transportation plan no new local violations will be created and the severity or number of existing violations will not be increased as a result of the project, and the project has been included in a regional emissions analysis that meets applicable §§ 93.118 and/or 93.119 requirements. The demonstration must be performed according to the consultation requirements of § 93.105(c)(1)(i) and the methodology requirements of § 93.123.

* * * * *

§ 93.118 [Amended]

■ 6. Section 93.118 is amended in paragraph (a) by removing the citation "§ 93.109(c) through (l)" and adding in its place "§ 93.109(c) through (n)".

■ 7. Section 93.119 is amended as follows:

■ a. In paragraph (a), by removing the citation "§ 93.109(c) through (l)" and adding in its place "§ 93.109(c) through (n)"; and

■ b. By revising paragraph (e)(2).

§ 93.119 Criteria and procedures: Interim emissions in areas without motor vehicle emissions budgets.

* * * * *

(e) * * *

(2) The emissions predicted in the "Action" scenario are not greater than:

(i) 2002 emissions, in areas designated nonattainment for the 1997 $PM_{2.5}$ NAAQS; or

(ii) Emissions in the most recent year for which EPA's Air Emissions Reporting Requirements (40 CFR Part 51, Subpart A) requires submission of on-road mobile source emissions inventories, as of the effective date of nonattainment designations for any $PM_{2.5}$ NAAQS other than the 1997 $PM_{2.5}$ NAAQS.

* * * * *

§ 93.121 [Amended]

■ 8. Section 93.121 is amended:

■ a. In paragraph (b) introductory text by removing the citation "§ 93.109(l)" and adding in its place "§ 93.109(n)";

■ b. In paragraph (c) introductory text by removing the citation "§ 93.109(j) or (k)" and adding in its place "§ 93.109(l) or (m)".

[FR Doc. 2010–5703 Filed 3–23–10; 8:45 am]

BILLING CODE 6560–50–P

Federal Register

Wednesday,
March 24, 2010

Part III

Department of Energy

10 CFR Part 430

Energy Conservation Program: Test Procedures and Standards for Fluorescent Lamp Ballasts; Public Meeting and Availability of the Preliminary Technical Support Document; Proposed Rules

DEPARTMENT OF ENERGY

10 CFR Part 430

[Docket No. EERE–2009–BT–TP–0016]

RIN 1904–AB99

Energy Conservation Program: Test Procedures for Fluorescent Lamp Ballasts

AGENCY: Office of Energy Efficiency and Renewable Energy, Department of Energy.

ACTION: Notice of proposed rulemaking and public meeting.

SUMMARY: The U.S. Department of Energy (DOE) proposes major revisions to its test procedures for fluorescent lamp ballasts established under the Energy Policy and Conservation Act. The proposed test method would eliminate the use of photometric measurements in favor of purely electrical measurements with the goal of reducing measurement variation. DOE proposes a set of transfer functions to convert the measured ballast electrical efficiency to a ballast efficacy factor value. These revisions, however, do not concern the measurement of energy consumption of ballasts in the standby and off modes, which DOE addressed in another rulemaking. DOE also announces a public meeting to receive comment on the issues presented in this notice.

DATES: DOE will hold a public meeting on Monday, April 26, 2010, beginning at 9 a.m. in Washington, DC. The agenda for the public meeting will first cover this test procedure rulemaking for fluorescent lamp ballasts, and then the concurrent energy conservation standards rulemaking (*see* proposal in today's **Federal Register**) for the same products. Any person requesting to speak at the public meeting should submit such a request, along with an electronic copy of the statement to be given at the public meeting, before 4 p.m., Monday, April 12, 2010.

DOE will accept comments, data, and information regarding this notice of proposed rulemaking (NOPR) before or after the public meeting, but no later than June 7, 2010. *See* section V, "Public Participation," of this NOPR for details.

ADDRESSES: The public meeting will be held at the U.S. Department of Energy, Forrestal Building, Room 8E–089, 1000 Independence Avenue, SW., Washington, DC 20585–0121. To attend the public meeting, please notify Ms. Brenda Edwards at (202) 586–2945. Please note that foreign nationals participating in the public meeting are subject to advance security screening procedures. If a foreign national wishes to participate in the workshop, please inform DOE of this fact as soon as possible by contacting Ms. Brenda Edwards at (202) 586–2945 so that the necessary procedures can be completed.

Any comments submitted must identify the Fluorescent Lamp Ballast Active Mode Test Procedures NOPR, and provide the docket number EERE–2009–BT–TP–0016 and/or Regulation Identifier Number (RIN) 1904–AB99. Comments may be submitted using any of the following methods:

Federal eRulemaking Portal: http://www.regulations.gov. Follow the instructions for submitting comments.

E-mail: FLB–2009–TP–0016@ee.doe.gov. Include the docket number EERE–2009–BT–TP–0016 and/or RIN 1904–AB99 in the subject line of the message.

Postal Mail: Ms. Brenda Edwards, U.S. Department of Energy, Building Technologies Program, Mailstop EE–2J, 1000 Independence Avenue, SW., Washington, DC, 20585–0121. Please submit one signed paper original.

Hand Delivery/Courier: Ms. Brenda Edwards, U.S. Department of Energy, Building Technologies Program, 6th Floor, 950 L'Enfant Plaza, SW., Washington, DC 20024. Telephone: (202) 586–2945. Please submit one signed paper original.

For detailed instructions on submitting comments and additional information on the rulemaking process, *see* section V, "Public Participation," of this document.

Docket: For access to the docket to read background documents or comments received, visit the U.S. Department of Energy, 6th Floor, 950 L'Enfant Plaza, SW., Washington, DC 20024, (202) 586–2945, between 9 a.m. and 4 p.m., Monday through Friday, except Federal holidays. Please call Ms. Brenda Edwards at (202) 586–2945 for additional information regarding visiting the Resource Room.

FOR FURTHER INFORMATION CONTACT: Ms. Linda Graves, U.S. Department of Energy, Office of Energy Efficiency and Renewable Energy, Building Technologies Program, EE–2J, 1000 Independence Avenue, SW., Washington, DC 20585–0121. Telephone: (202) 586–1851. E-mail: *Linda.Graves@ee.doe.gov.* In the Office of General Counsel, contact Ms. Betsy Kohl, U.S. Department of Energy, Office of the General Counsel, GC–71, 1000 Independence Avenue, SW., Washington, DC 20585. Telephone: (202) 586–7796. E-mail: *Betsy.Kohl@hq.doe.gov.*

For additional information on how to submit or review public comments and on how to participate in the public meeting, contact Ms. Brenda Edwards, U.S. Department of Energy, Office of Energy Efficiency and Renewable Energy, Building Technologies Program, EE–2J, 1000 Independence Avenue, SW., Washington, DC 20585–0121. Telephone: (202) 586–2945. E-mail: *Brenda.Edwards@ee.doe.gov.*

SUPPLEMENTARY INFORMATION:

Table of Contents

I. Authority and Background
II. Summary of the Proposal
III. Discussion
A. Scope of Applicability
1. Ballasts Covered
2. Effective Date
B. Existing Test Procedure
C. Drawbacks of Existing BEF Test Procedure
D. Efficiency Metric for Fluorescent Lamp Ballasts
E. Test Procedure Improvement Options
1. Resistor-Based Ballast Efficiency Correlated to Ballast Efficacy Factor
2. Lamp-Based Ballast Efficiency Correlated to Ballast Efficacy Factor
3. Improvements to Existing Test Procedure
4. Relative System Efficacy
F. Proposed Test Procedure
1. Test Conditions
2. Test Setup
3. Test Method
4. Calculations
5. Transfer Equations—General Method
6. Transfer Equations—Testing, Analysis, and Results
7. Resistor Value Determination
8. Non-Operational Ballasts When Connected to a Resistor
9. Existing Test Procedure Update
10. References to ANSI C82.2–2002
G. Burden to Conduct the Proposed Test Procedure
H. Impact on Measured Energy Efficiency
I. Certification and Enforcement
IV. Procedural Issues and Regulatory Review
A. Executive Order 12866
B. National Environmental Policy Act
C. Regulatory Flexibility Act
D. Paperwork Reduction Act
E. Unfunded Mandates Reform Act of 1995
F. Treasury and General Government Appropriations Act, 1999
G. Executive Order 13132
H. Executive Order 12988
I. Treasury and General Government Appropriations Act, 2001
J. Executive Order 13211
K. Executive Order 12630
L. Section 32 of the Federal Energy Administration Act of 1974
V. Public Participation
A. Attendance at Public Meeting
B. Procedure for Submitting Requests to Speak
C. Conduct of Public Meeting
D. Submission of Comments
E. Issues on Which DOE Seeks Comment
1. All Aspects of the Existing Test Procedure for Active Mode Energy Consumption

2. Appropriate Usage of ANSI Standards
3. Method of Measurement for Dimming Ballasts
4. Resistor-based Ballast Efficiency Test Method
5. Alternative Approaches to Amending the Test Procedure
6. Ballasts that do not Operate Resistors
7. Ballast Factor Variation Due to Variations in Measured Lamp Power
8. Ballast Factor Binning
9. Transfer Equations
10. Scaling Transfer Equations
11. Burden on Manufacturers and Testing Facilities
VI. Approval of the Office of the Secretary

I. Authority and Background

Title III of the Energy Policy and Conservation Act (42 U.S.C. 6291 *et seq.;* EPCA or the Act) sets forth a variety of provisions designed to improve energy efficiency. Part A of Title III (42 U.S.C. 6291–6309) establishes the "Energy Conservation Program for Consumer Products Other Than Automobiles," which covers consumer products and certain commercial products (all of which are referred to below as "covered products"), including fluorescent lamp ballasts (ballasts). (42 U.S.C. 6291(1)(2) and 6292(a)(13))

Under the Act, the overall program consists essentially of the following parts: testing, labeling, and Federal energy conservation standards. The testing requirements consist of test procedures, prescribed under EPCA, that manufacturers of covered products must use as the basis for certifying to the DOE that their products comply with energy conservation standards adopted under EPCA and for representations as to the efficiency of their products. Also, these test procedures must be used whenever testing is required in an enforcement action to determine whether covered products comply with EPCA standards.

Section 323 of EPCA (42 U.S.C. 6293) sets forth generally applicable criteria and procedures for DOE's adoption and amendment of test procedures. It states, for example, that "[a]ny test procedures prescribed or amended under this section shall be reasonably designed to produce test results which measure energy efficiency, energy use,* * * or estimated annual operating cost of a covered product during a representative average use cycle or period of use, as determined by the Secretary [of Energy], and shall not be unduly burdensome to conduct." (42 U.S.C. 6293(b)(3)) In addition, if DOE determines that a test procedure amendment is warranted, it must publish proposed test procedures and offer the public an opportunity to present oral and written comments on them. (42 U.S.C. 6293(b)(2)) Finally, in any rulemaking to amend a test procedure, DOE must determine "to what extent, if any, the proposed test procedure would alter the measured energy efficiency * * * of any covered product as determined under the existing test procedure." (42 U.S.C. 6293(e)(1)) If DOE determines that the amended test procedure would alter the measured efficiency of a covered product, DOE must amend the applicable energy conservation standard accordingly. (42 U.S.C. 6293(e)(2))

As to fluorescent lamp ballasts specifically, DOE must "prescribe test procedures that are in accord with ANSI [1] standard C82.2–1984 [2] or other test procedures determined appropriate by the Secretary." (42 U.S.C. 6293(b)(5)) DOE's existing test procedures for ballasts, adopted pursuant to these and the above-described provisions, appear at 10 CFR Part 430, Subpart B, Appendix Q.

This test procedure rulemaking will fulfill the periodic review requirement prescribed by the Energy Independence and Security Act of 2007. "At least once every 7 years, the Secretary shall review test procedures for all covered products and—amend test procedures with respect to any covered product * * * or publish notice in the **Federal Register** of any determination not to amend a test procedure." (42 U.S.C. 6293(b)(1)(A) DOE invites comment on all aspects of the existing test procedures for fluorescent lamp ballasts for active mode energy consumption that appear at Title 10 of the CFR Part 430, Subpart B, Appendix Q ("Uniform Test Method for Measuring the Energy Consumption of Fluorescent Lamp Ballasts").

In a separate rulemaking proceeding, DOE is considering amending energy conservation standards for fluorescent lamp ballasts (docket number EERE–2007–BT–STD– 0016; hereinafter referred to as the "fluorescent lamp ballast standards rulemaking"). DOE initiated that rulemaking by publishing a **Federal Register** (FR) notice announcing a public meeting and availability of the framework document ("Energy Efficiency Program for Consumer Products: Public Meeting and Availability of the Framework Document for Fluorescent Lamp Ballasts,") on January 22, 2008. 73 FR 3653. DOE has completed the preliminary analyses for the energy conservation standard rulemaking and published in today's **Federal Register** a notice announcing a public meeting and availability of the preliminary technical support document.

On February 6, 2008, DOE held a public meeting in Washington, DC, to discuss the framework document for the fluorescent lamp ballast energy conservation standards rulemaking (hereinafter referred to as the "2008 public meeting"). At that meeting, attendees also discussed potential revisions to the test procedure for active mode energy consumption. All comments on the fluorescent lamp ballast standards rulemaking regarding the measurement of active mode energy consumption are discussed in section III of this proposed rulemaking.

DOE has also completed a standby mode and off mode test procedure. The Energy Independence and Security Act of 2007 (Pub. L. 110–140) amended EPCA to require that, for each covered product for which DOE's current test procedures do not fully account for standby mode and off mode energy consumption, DOE amend the test procedures to include standby mode and off mode energy consumption into the overall energy efficiency, energy consumption, or other energy descriptor for that product. If an integrated test procedure is technically infeasible, DOE must prescribe a separate standby mode and off mode energy use test procedure, if technically feasible. (EPCA section 325(gg)(2)(A); 42 U.S.C. 6295(gg)(2)(A)) DOE published a final rule addressing standby mode and off mode energy consumption for fluorescent lamp ballasts in the **Federal Register** on October 22, 2009. 74 FR 54445.

II. Summary of the Proposal

In this notice of proposed rulemaking (NOPR), DOE proposes to modify the current test procedures for fluorescent lamp ballasts to revise the scope of applicability of this test procedure for consistency with the ongoing fluorescent lamp ballast standards rulemaking, improve measurement variability, and update the referenced standards. DOE also proposes provisions for manufacturers to submit compliance statements and certification reports for fluorescent lamp ballasts. The following paragraphs summarize these proposed changes.

In the preliminary technical support document for the fluorescent lamp ballast standards rulemaking, DOE makes a preliminary determination of the scope of coverage. Today's proposed test procedure includes specific procedures for ballasts identified in the preliminary determination of scope. If the scope of coverage changes in the fluorescent lamp ballast standards

[1] American National Standards Institute.

[2] "American National Standards for Fluorescent Lamp Ballasts—Methods of Measurement." Approved October 21, 1983.

rulemaking, DOE will add or remove provisions from the test procedure so that it is consistent with the final scope of coverage of standards. The preliminary determination of scope includes ballasts that operate multiple numbers of lamps (one through six), all values of ballast factor, and many different lamp classes including 4-foot medium bipin T8 and T12 lamps, 4-foot T5 miniature bipin lamps, 8-foot single pin slimline T8 and T12 lamps, and 8-foot recessed double contact high output T8 and T12 lamps. *See* section III.A.1 for further detail.

In addition to matching the scope of coverage for the active mode test procedure to the scope of coverage being considered in the fluorescent lamp ballast standards rulemaking, the proposed amendments seek to reduce the measurement variation inherent in the existing test procedure. The existing test procedure exhibits variation in measurements of a similar magnitude to the spread in efficiency within many fluorescent lamp ballast product classes analyzed in the preliminary determination. The test measurement variation can be attributed to reference lamp variation, lamp operation conditions, and ballast wiring. DOE believes a test procedure with reduced variation will allow for more precise standard setting and certification, compliance, and enforcement testing.

DOE's proposed test method greatly reduces the impact of reference lamps on measurement variation. The method calculates a ballast input power and output power using only electrical measurements and resistors that simulate the load placed on a ballast by a fluorescent lamp at a given operating condition. Because a resistor can be manufactured with much smaller performance tolerances than a fluorescent lamp, the resistor introduces much less variation to the operating characteristics of the ballast. This revised test method delivers increased precision, thereby allowing for greater resolution. The procedure proposed in this rulemaking measures ballast input power and ballast output power and then calculates ballast electrical efficiency (output power divided by input power). The ballast electrical efficiency is then converted to ballast efficacy factor (BEF) using a transfer equation to maintain the reported metric for energy efficiency as BEF for consistency with use of BEF in 42 U.S.C. 6295(g)(5) and (g)(8). DOE developed the transfer equation by measuring several ballasts within a product class for ballast efficiency (BE) using the proposed BE test procedure and for BEF using the existing test procedure, and then calculating a line of best fit for the combined data. This proposed method is hereafter referred to as the resistor-based ballast efficiency test procedure.

Prior to selecting the proposed test method, DOE also considered three other methods as potential improvements in the revised test procedure: (1) The lamp-based ballast efficiency (correlated to BEF) method, (2) the existing BEF method with revisions to reduce variation; and (3) the relative system efficacy (RSE) method. DOE's initial assessment of the lamp-based ballast efficiency method, which uses a lamp as a load, rather than a resistor, indicated that, similar to the resistor-based ballast efficiency method, there could be significant improvements by eliminating light output-based measurements. However, adopting that method would result in a test procedure that was still susceptible to lamp-to-lamp variability. DOE explored the existing light-output-based test procedure and found improvements could be made without making fundamental changes. DOE believes that tightening tolerances on certain specifications and clarifying loosely-defined directions can reduce measurement variation relative to the existing test procedure for fluorescent ballasts, but to a lesser extent than the proposed resistor-based BE test procedure. DOE found the RSE method to exhibit larger variation than the proposed resistor-based BE test procedure because it uses the same measurement techniques as the existing test procedure.

In any rulemaking to amend a test procedure, DOE must determine "to what extent, if any, the proposed test procedure would alter the measured energy efficiency * * * of any covered product as determined under the existing test procedure." (42 U.S.C. 6293(e)(1)) If DOE determines that the amended test procedure would alter the measured efficiency of a covered product, DOE must amend the applicable energy conservation standard accordingly. (42 U.S.C. 6293(e)(2)) The proposed test procedure would change the measured energy efficiency of some products relative to the existing test procedure. To ensure that the standards developed in the ongoing fluorescent lamp ballast standards rulemaking account for any changes to the test procedure, DOE is developing the standards based on the measured energy efficiency generated by the active mode test procedure proposed in this rulemaking. As a result, DOE proposes an effective date for this revised test procedure, to be published as Appendix Q1 of 10 CFR part 430 Subpart B, concurrent with the compliance date of the fluorescent lamp ballast standards rulemaking (approximately June 30, 2014). DOE plans to publish the final rule establishing the procedures in Appendix Q1 in the same rule document as the final rule establishing any amended standards.

DOE notes that ballasts that operate one or two 40 or 34 watt (W) 4-foot T12 medium bipin lamps (F40T12 and F34T12), two 75 W or 60 W 8-foot T12 single pin slimline lamps (F96T12 and F96T12/ES); and two 110 W and 95 W 8-foot T12 recessed double contact high output lamps (F96T12HO and F96T12HO/ES) are covered by existing energy conservation standards. 10 CFR 430.32(m). Until the proposed effective date of the test procedure to be published at Appendix Q1, these ballasts should continue to be tested using the existing test procedure to determine compliance with existing standards. DOE proposes in this NOPR to make minor updates to the existing test procedure, published at Appendix Q to Subpart B of part 430. DOE would update the reference to ANSI C82.2–1984 in the existing test procedure (appendix Q) to ANSI C82.2–2002. Because DOE does not believe the updated standard will impose increased testing burden or alter the measured BEF of fluorescent lamp ballasts, DOE proposes that the amendments to Appendix Q be effective 30 days after publication of this test procedure final rule. DOE notes that because use of the test method in Appendix Q1 is not appropriate for those ballasts that cannot operate a resistor load bank, manufacturers would continue to test those ballasts using the test method set forth in Appendix Q. In addition, the test procedures for any ballasts that operate in standby mode are also located in Appendix Q.

DOE also proposes amending the language in 10 CFR 430.62 to require fluorescent lamp ballast manufacturers to submit compliance statements and certification reports. This provision would also be effective 30 days after publication of this test procedure final rule. Ballast manufacturers would begin to submit these documents to certify compliance with existing fluorescent lamp ballast energy conservation standards using the test procedures at Appendix Q one year following publication of this final rule. Ballast manufacturers would certify compliance with any amended standards using the test procedures at Appendix Q1 beginning one year following the compliance date of the amended standards.

III. Discussion

A. Scope of Applicability

1. Ballasts Covered

Today's proposed test procedure is applicable to the fluorescent lamp ballasts covered in the preliminary determination of scope outlined in the preliminary technical support document for the fluorescent lamp ballast standards rulemaking. The preliminary determination of scope is as follows:

(1) Ballasts that operate one, two, three, four, five, or six straight-shaped lamps (commonly referred to as 4-foot medium bipin lamps) with medium bipin bases, a nominal overall length of 48 inches, a rated wattage [3] of 25 watts (W) or more, and an input voltage at or between 120 volts (V) and 277 V;

(2) Ballasts that operate one, two, three, four, five, or six U-shaped lamps (commonly referred to as 2-foot U-shaped lamps) with medium bipin bases, a nominal overall length between 22 and 25 inches, a rated wattage of 25 W or more, and an input voltage at or between 120 V and 277 V;

(3) Ballasts that operate one or two rapid-start lamps (commonly referred to as 8-foot high output lamps) with recessed double contact bases, a nominal overall length of 96 inches and an input voltage at or between 120 V and 277 V;

(4) Ballasts that operate one or two instant-start lamps (commonly referred to as 8-foot slimline lamps) with single pin bases, a nominal overall length of 96 inches, a rated wattage of 52 W or more, and an input voltage at or between 120 V and 277 V;

(5) Ballasts that operate one or two straight-shaped lamps (commonly referred to as 4-foot miniature bipin standard output lamps) with miniature bipin bases, a nominal length between 45 and 48 inches, a rated wattage of 26 W or more, and an input voltage at or between 120 V and 277 V;

(6) Ballasts that operate one, two, three, or four straight-shaped lamps (commonly referred to as 4-foot miniature bipin high output lamps) with miniature bipin bases, a nominal length between 45 and 48 inches, a rated wattage of 49 W or more, and an input voltage at or between 120 V and 277 V;

(7) Ballasts that operate one, two, three, or four straight-shaped lamps (commonly referred to as 4-foot medium bipin lamps) with medium bipin bases, a nominal overall length of 48 inches, a rated wattage of 25 W or more, an input voltage at or between 120 V and 277 V, a power factor of less than 0.90, and designed and labeled for use in residential applications; and

(8) Ballasts that operate one, two, three, four, five, or six rapid-start lamps (commonly referred to as 8-foot high output lamps) with recessed double contact bases, a nominal overall length of 96 inches, an input voltage at or between 120 V and 277 V, and that operate at ambient temperatures of 20 degrees Fahrenheit (°F) or less and are used in outdoor signs.

For the proposed test procedure in this rulemaking, DOE would establish particular test setups and calculations depending on the product class. When evaluating and establishing energy conservation standards, DOE divides covered products into product classes by the type of energy used, capacity, or other performance-related features that affect efficiency, considering factors such as the utility of the product to users. (*See* 42 U.S.C. 6295(q)) The fluorescent lamp ballast standards rulemaking delineates product classes based on the maximum number of lamps operated by a ballast, ballast factor, starting method, lumen package,[4] lamp base, market sector, and lamp length. Ballasts contained in the same product class are subject to the same energy conservation standards.

At the 2008 Framework public meeting for the fluorescent lamp ballast standards rulemaking, the Appliance Standards Awareness Project (ASAP) asked DOE to elaborate on how the schedules for the fluorescent lamp ballast energy conservation standard and active mode test procedure rulemakings interact. (ASAP,[5] Public Meeting Transcript, No. 9 at p. 29) Because the fluorescent lamp ballast standards rulemaking is in the preliminary analysis phase of the rulemaking process, the proposed scope of coverage is still in draft form. To ensure consistency in the scope of coverage, DOE plans to publish the final rule for this test procedure rulemaking concurrently with the ballasts standards rulemaking final rule (scheduled for June 30, 2011). Concurrent publication affords DOE the opportunity to synchronize its test procedure with the final scope of coverage for the fluorescent lamp ballast standards rulemaking. If a ballast type [6] is removed from the scope of coverage, DOE will eliminate the pertinent test procedures from the active mode test procedure in the final rule. Conversely, in the event additional ballasts are added to the scope of coverage, DOE will develop test procedures for these ballasts and update the active mode test procedure in a subsequent rulemaking. For example, in the preliminary analyses of the fluorescent lamp ballast standards rulemaking, DOE's preliminary scope of coverage that does not include ballasts capable of dimming. As DOE invites comment on this in the fluorescent lamp ballast standards rulemaking, if DOE's final scope of coverage includes dimming ballasts, DOE will need finalize test procedures for these ballasts. DOE also invites comment in this test procedure rulemaking on suggested methods of measuring the efficiency of dimming-capable ballasts.

2. Effective Date

Because some of the test procedure amendments proposed for Appendix Q1 will change measured efficiency and therefore affect compliance with existing standards, DOE proposes an effective date of the revised test procedure in Appendix Q1 to Subpart B concurrent with the compliance date of the energy conservation standards prescribed by the fluorescent lamp ballast standards rulemaking. DOE also plans to publish the final rule establishing the procedures in Appendix Q1 in the same rule document as the final rule establishing any amended standards. In the fluorescent lamp ballast standards rulemaking, DOE is developing standards that correspond with the active mode test procedure proposed in this rulemaking. The proposed active mode test procedure would be used to test ballast efficiency on or after the compliance date of the fluorescent lamp ballast standards rulemaking (approximately June 2014). Until this compliance date, fluorescent lamp ballasts would continue to be tested using the existing test procedure in Appendix Q to determine compliance with existing standards. Because the modifications to Appendix Q (an update to referenced industry standards) do not affect the measured efficiency, DOE proposes that they be effective 30 days after publication of this test procedure final rule. DOE notes that because use

[3] The July 14, 2009 final rule establishing amended energy conservation standard for general service fluorescent lamps and incandescent reflector lamps (74 FR 34080) adopted a new definition for "rated wattage" that can be found in 10 CFR 430.2. Please *see http://www1.eere.energy.gov/buildings/appliance_standards/residential/incandescent_lamps.html* for further information.

[4] Lumen package refers to the quantity of light generated by a lamp and ballast system. For example, 8-foot RDC high output HO lamps and 4-foot miniature bipin (MiniBP) HO lamps tend to operate at higher currents than 8-foot single pin (SP) slimline lamps and 4-foot MiniBP standard output (SO) lamps, respectively. This difference in operating design increases the quantity of light per unit of lamp length.

[5] A notation in the form "ASAP, Public Meeting Transcript, No. 9 at p. 29" identifies a statement made in a public meeting that DOE has received and has included in the docket of this rulemaking. This particular notation refers to a comment: (1) Submitted during the public meeting on February 6, 2008; (2) in document number 9 in the docket of this rulemaking; and (3) appearing on page 29 of the transcript.

[6] Ballast type refers to a grouping of ballasts that use the same starting method, and operate lamps of the same diameter, lumen package, base type, and length. For example, instant-start ballasts that operate 4-foot medium bipin T8 lamps.

of the test method in Appendix Q1 is not appropriate for those ballasts that cannot operate a resistor load bank, manufacturers would continue to test those ballasts using the test method set forth in Appendix Q. In addition, the test procedures for any ballasts that operate in standby mode are also located in Appendix Q.

Certification and compliance procedures for fluorescent lamp ballasts are also proposed in this rulemaking. Because these provisions also do not affect measured efficiency, DOE proposes that they be effective 30 days after publication of this test procedure final rule. Accordingly, manufacturers of fluorescent lamp ballasts would be required to submit compliance statements and certification reports to certify compliance with existing standards, using the test procedures at Appendix Q, one year following publication of the test procedure final rule. Ballast manufacturers would certify compliance with any amended standards using the test procedures at Appendix Q1 beginning one year following the compliance date of the amended standards.

B. Existing Test Procedure

The existing ballast test procedure (in Appendix Q to Subpart B of 10 CFR part 430) used to determine the energy efficiency of a fluorescent lamp ballast is based on light output measurements and ballast input power. The metric used is called ballast efficacy factor (BEF). BEF is the relative light output divided by the power input of a fluorescent lamp ballast, as measured under test conditions specified in ANSI standard C82.2–1984, or as may be prescribed by the Secretary. 42 U.S.C. 6291(29)(C)

The BEF metric uses light output of the lamp and ballast system instead of ballast electrical output power in its calculation of the efficiency of a ballast. To measure relative light output, ANSI C82.2–1984 directs the user to measure the photocell output [7] of the test ballast operating a reference lamp and the light output of a reference ballast operating the same reference lamp. Dividing photocell output of the test ballast by the photocell output of the reference ballast yields relative light output or ballast factor (BF). Concurrent with measuring relative light output, the user is directed to measure ballast input power. BEF is then calculated by dividing relative light output by input power. A ballast that produces more light than another ballast with the same input power will have a larger BEF.

C. Drawbacks of Existing BEF Test Procedure

In response to the framework document for the fluorescent lamp ballast standards rulemaking, DOE received numerous written and verbal comments from interested parties on the usage of ballast efficacy factor as the metric for describing the energy consumption of fluorescent lamp ballasts. The National Electrical Manufacturers Association (NEMA) commented that in previous rulemakings regarding efficiency of ballasts, the variation in BEF measurements was less of an issue because the range of efficiency in the market was much larger. The spread in the measured energy efficiency between magnetic and electronic ballasts, for example, was much larger than the measurement variation inherent to the existing test procedure. However, in the current market, the spread in efficiency between ballasts has a much smaller range. (NEMA, Public Meeting Transcript, No. 9 at p. 23, pp. 56–57) NEMA commented that DOE should change the metric away from BEF because BEF measurements made in accordance with the current fluorescent lamp ballast test procedure (appendix Q) can be shown to have a measurement uncertainty on the order of 5 percent. NEMA stated that when measuring the same ballast at different test laboratories with different examples of the same reference lamp, the spread in test results is similar to the range of T8 ballast BEFs observed in the market today. NEMA reasoned that in order to have meaningful verification of a standard DOE would need a metric that delineates between the products on the market. According to NEMA, the ballast industry would be challenged to come to consensus on a standard when so much variation existed in the data. (NEMA, Public Meeting Transcript, No. 9 at p. 23, pp. 35–36, pp. 56–58; NEMA,[8] No. 11 at p. 2)

DOE understands NEMA's concerns regarding the measurement uncertainty related to the BEF measurement method under the existing fluorescent lamp ballast test procedure. The measurement uncertainty would negatively impact DOE's ability to set standards for ballasts, as it could be difficult to distinguish between typical and high-efficiency ballasts. DOE agrees with NEMA's description that the range of efficiencies of ballasts available in the market have in general decreased and acknowledges the need for a test method or metric that reduces systematic error and generates more reliable test results. Reduced variation in test procedure calculations will allow for more precise standard setting and certification, compliance, and enforcement testing. DOE is proposing a test procedure that is designed to reduce systematic error and enhance energy conservation standard-setting capabilities.

NEMA also stated that lamp manufacturing variations will create variations in measured BEF values. (NEMA, Public Meeting Transcript, No. 9 at p. 38; NEMA, No. 11 at p. 6; GE, Public Meeting Transcript, No. 9 at p. 43) DOE agrees that a number of factors, in particular the manufacturing variability of lamps, can contribute to producing this uncertainty. Due to lamp manufacturing variability and in order to reduce the performance variation among those lamps selected for testing, industry standards referenced in the test procedure specify a narrower range of operating conditions for reference lamps. ANSI C82.1–1977 (referenced by ANSI C82.2–1984) specifies that a reference lamp must not vary more than 2.5 percent from the lamp parameters given in the ANSI C78 Series (1972 edition and 1975 supplement) for fluorescent lamp electrical characteristics. Even this narrowed variation allowed in the measured lamp power, however, has a significant impact on the variation in BEF. Changes in measured lamp input power result in disproportionate changes to the numerator (ballast factor) and the denominator (input power) in the BEF metric. The percent change in ballast factor is not as great as the percent change in ballast input power for a given change in measured lamp input power. Consequently, the same ballast will generate different values of BEF when tested on reference lamps with different measured power.

GE commented that in addition to reference lamp manufacturing variation, BEF can vary depending on the testing facility. (GE, Public Meeting Transcript, No. 9 at p. 43) DOE agrees that deviations in test facility environmental conditions can result in dissimilarities in measured BEF. ANSI C82.2–1984 (incorporated in the existing test procedure) allows ambient temperature

[7] The photocell output of a light source is measured in units of watts. Photocell output (watts) is one method of measuring the light output of a light source. Through the remainder of this document, DOE refers to the output of a fluorescent lamp as "light output," even though the existing test procedure indicates measuring the light with photocell output.

[8] A notation in the form "NEMA, No. 11 at p. 2" identifies a written comment that DOE has received and has included in the docket of this rulemaking or a written docket submission. This particular notation refers to a comment: (1) Submitted by NEMA; (2) in document number 11 in the docket of this rulemaking; and appearing on page 2.

to vary ±1 degrees Celsius (°C) from 25 °C. Through testing, DOE has shown ambient temperature to have an effect on BEF measurements. Specifically, DOE found that changes in ambient temperature as small as 1 °C resulted in changes in BEF as much as 1.5 percent.

NEMA commented that the BEF measurement requires photometric measurements of a reference lamp attached to the test ballast; thus, BEF values cannot be compared across ballasts that operate different lamp types. A more appropriate metric would not depend on lamp parameters or requirements. (NEMA, Public Meeting Transcript, No. 9 at p. 38, pp. 124–125; NEMA, No. 11 at p. 6) NEMA also stated that an alternative metric that is comparable across all instant-start or programmed-start ballasts and capable of including lamp types yet to be developed would be preferable to the existing test procedure using BEF. (NEMA, Public Meeting Transcript, No. 9 at pp. 76–77, p. 99) NEMA further commented that some lamps do not have ANSI standards governing their operating characteristics. Considerable variation in lamp operating conditions exists among manufacturers for these lamps because the industry has not reached a formal consensus. (NEMA, Public Meeting Transcript, No. 9 at pp. 76–77) NEMA suggested that DOE consider an alternative metric based on measuring ballast input and output electrical power as discussed in section III.E. (NEMA, Public Meeting Transcript, No. 9 at p. 32, pp. 37–38)

DOE recognizes that BEF is not comparable across all ballasts. BEF is measured and calculated using fluorescent lamps that vary in measured power, thereby impacting ballast input power. As a consequence, BEF is dependent on lamp type.[9] DOE plans to organize the covered ballasts into different product classes based on consumer utility and energy efficiency differences. Because DOE will consider a separate energy conservation standard for each of these product classes, the test procedure must make comparisons in energy efficiency possible within a product class. However, the existing BEF method does not allow for such comparisons in all circumstances, as explained in the following paragraph. DOE recognizes that comparison across product classes may also be useful for consumers of fluorescent lamp ballasts. DOE addresses this issue in its discussion of the resistor-based BE method in section III.E.1.

In the ongoing fluorescent lamp ballast standards rulemaking, DOE has tentatively determined there is no distinct consumer utility difference between T8 and T12 ballasts. As a result, DOE is considering grouping T8 and T12 ballasts in the same product class. Due to the difference in rated powers of the reference lamps, however, measured BEF values for T8 and T12 ballasts are not comparable. Because DOE plans to subject certain T8 and T12 ballasts to the same energy conservation standard (by including these ballasts in the same product class), DOE agrees that amendments to the existing active mode test procedure to allow for greater comparability across lamp types is warranted. Therefore, in this notice DOE proposes to revise the test procedure such that the reported BEF for a T12 ballast will be comparable to the reported BEF for a T8 ballast. These proposed revisions are discussed in further detail in section III.F.5.

DOE also agrees that the revised test procedure and metric should be able to encompass newly-developed lamps. The industry has not come to consensus on operating specification standards for some of these new, reduced-wattage lamps. Without consistent industry standards for lamps, light-output-based testing of BEF can vary greatly. DOE proposes to test ballasts while operating one representative load, characterizing the lamp wattage most commonly operated. The development and marketing of new, reduced-wattage lamps (with or without ANSI standards) is not a concern because today's test procedure proposes to specify a particular lamp and ballast combination for testing. *See* section III.F.2 for additional detail on DOE's preliminary decision to test ballasts while operating a load characteristic of the most common wattage lamp.

NEMA commented that lamp filament heating introduces variability into the existing BEF measurement (NEMA, Public Meeting Transcript, No. 9 at p. 39). DOE agrees the existing ballast test procedure is unclear on whether or not electrode heating should be used in the reference circuit. Electrode heating is known to increase the efficiency of a lamp, which means the same amount of input power produces more light. Consequently, the ballast factor of a test ballast tends to be smaller if the reference circuit uses electrode heating compared to a reference circuit without electrode heating. DOE agrees that the current test procedure inserts some variability into the measurement of BF and consequently BEF due to the apparent flexibility in the use of reference circuit heating. In today's proposed test procedure, DOE addresses this issue by specifying that electrode heating should always be used in the reference circuit for medium bipin, recessed double contact, and miniature bipin lamps. Electrode heating should not be used in the reference circuit for single pin lamps. As discussed in section III.E.3, DOE believes specifying whether electrode heating should be used in the reference case limits opportunity for introducing variation in the test procedure. DOE also understands that the efficiency change due to electrode heating may vary from lamp to lamp. DOE believes the variation to be relatively small, though it does not have quantitative data to characterize this variation among lamps. DOE invites comment on reasonable techniques to reduce this source of variation.

NEMA also commented that filament heating should be taken into account in comparison of ballasts with different starting methods. (NEMA, Public Meeting Transcript, No. 9 at p. 39) DOE is aware starting method can impact the measurement of ballast output power. Ballasts that employ constant electrode heating generate smaller BEF values than ballasts without constant electrode heating. Because BEF considers the light output of a ballast, constant cathode heating tends to decrease BEF because some of the ballast output power is used for purposes other than light production. From a system viewpoint, however, BEF reflects the loss in lighting efficiency due to electrode heating. Contrary to NEMA, DOE does not believe that power dissipated by the lamp electrodes should be included in the measurement of output power as this power is not used directly toward the primary function of producing light. DOE notes that it will consider setting specific standards for ballasts that employ electrode heating based on any potential consumer utility differences[10] in the ongoing fluorescent lamp ballast standards rulemaking.

NEMA also indicated T8 ballasts are particularly impacted by measurement

[9] Lamp type describes a grouping of lamps that have the same length, lumen package, base type, and diameter.

[10] In the fluorescent lamp ballast standards rulemaking, DOE has tentatively determined that while rapid-start ballasts do not offer distinct utility compared to instant-start ballasts, programmed-start ballasts do offer distinct utility compared to instant-start ballasts. DOE found that consumers frequently use rapid-start ballasts as replacements for instant-start ballasts. Programmed-start ballasts, however, can increase lamp lifetime for frequent on/off cycling applications (*e.g.* for use with occupancy sensors), providing consumer utility. Therefore, DOE has tentatively determined to group rapid-start ballasts and instant-start ballast in the same product class and place programmed-start ballasts in a separate product class.

uncertainty because much of the T8 ballast market is high-frequency electronic and T8 lamps are first operated on a low-frequency (60-hertz) reference ballast during BEF testing. NEMA asserted that lamps increase in efficiency when switching from low- to high-frequency operation, but that all lamps will not gain exactly the same amount of efficiency. NEMA mentioned it could provide data to show error of several percent when the same ballast is tested at different labs with different lamps due to the high-frequency to low-frequency comparison. (NEMA, Public Meeting Transcript, No. 9 at p. 26, p. 39)

DOE agrees that random error is introduced into the measurement and calculation of BEF due to variation in lamp efficiency gains when switching from magnetic to electronic ballasts. In general, when a lamp is run at high-frequency (electronic ballasts), the lamp requires less power to produce the same amount of light when compared to a low-frequency (magnetic) ballast. Electronic ballasts run at high frequency, so they tend to display higher BEF values than low-frequency magnetic ballasts. Part of this difference is due to the lamp operating at a lower rated wattage (increased efficiency), while the remainder is due to improvements in the electrical efficiency of the ballast. ANSI does not specify high-frequency reference conditions for 32W F32T8, 60W F96T12/ES, 95W F96T12HO/ES, and 110W F96T12HO fluorescent lamps.

Another source of variation in the existing test procedure is lamp and ballast wiring for rapid- and programmed-start ballasts. These ballasts have two wires connected to the pins on each end of the lamp. One of the two wires supplies power to the lamp arc, and the second provides power to the electrode. Depending on which pin the lamp arc wire is connected to, the current supplied to the lamp arc will encounter different amounts of resistance. The difference in resistance is due to the position on the lamp electrode where the current starts and finishes the lamp arc. When this position (hotspot) is in the center of the electrode, wiring differences do not change the measured BEF. However, when the hotspot is closer to one end or the other of the electrode, the current encounters varied resistances based on the distance it must travel through the electrode. Because ballast wires are not identified as delivering energy to the lamp arc or electrode and the position of the hotspot is unknown, this source of variation cannot be eliminated.

At the framework document public meeting, DOE received comments that ballast manufacturers and independent test labs use light output measurements for calculating ballast factor for both rapid-start and instant-start ballasts. (GE, Public Meeting Transcript, No. 9 at p. 73; Philips, Public Meeting Transcript, No. 9 at p. 74) ANSI C82.2–1984 suggests the usage of power measurements for instant-start systems, but common industry practice has been the usage of light output measurements for all ballast starting methods. Ballast factor can be calculated either as a ratio of test and reference circuit light output or as a ratio of measured lamp power. DOE notes that power measurements are somewhat impractical to conduct on ballasts that employ electrode heating because these ballasts use two wires to connect to a lamp electrode. The presence of additional wires requires more measurements to determine output power which introduces error into the results. DOE believes this technique introduces significant error through capacitance to ground and loading effects on ballasts that use electrode heating. As discussed in section III.E.3, DOE believes that one way to reduce this error would be to require light-output measurements to be used for all ballast types.

D. Efficiency Metric for Fluorescent Lamp Ballasts

A joint comment (hereafter the "Joint Comment") submitted by ASAP, the American Council for an Energy-Efficient Economy (ACEEE), the Alliance to Save Energy (ASE), the Natural Resources Defense Council (NRDC), the Northeast Energy Efficiency Partnerships (NEEP), and the Northwest Power and Conservation Council (NPCC) suggested that DOE consider a metric other than BEF that permits comparison between different lamp wattages, ballast types, and numbers of lamps operated by a ballast. (Joint Comment, No. 12 at p. 1) NEMA also recommended that DOE consider changing the metric away from BEF and toward an alternate metric. (NEMA, No. 11 at p. 2, pp. 11–12) NEMA suggested if DOE cannot change the metric from BEF, it should develop a test procedure that requires the measurement of some other metric unrelated to lamp lumen output, such as ballast efficiency [11] or relative system efficacy,[12] and then give correlations to BEF so that BEF can still be used in standard-setting. The New York State Energy Research and Development Authority (NYSERDA) also recommended consideration of RSE as an alternative metric. (NYSERDA, No. 9, pp. 27–28) NEMA asked if DOE might accept a NEMA- and ANSI-supported method of measuring BE, and correlating BE measurements with BEF values. (NEMA, Public Meeting Transcript, No. 9 at p. 32, pp. 37–38)

The energy conservation standard is specified using the metric of ballast efficacy factor. 42 U.S.C. 6295(g)(5), (g)(8) In this rulemaking, DOE proposes measuring an alternate metric (ballast efficiency) and using a set of correlation functions so that BEF values can be reported.

Acuity Brands Lighting also commented that much of the marketplace (end-users, lighting designers, architects, and electrical engineers) do not use the BEF metric and may not have knowledge of it. Acuity Brands indicated that luminaire manufacturers are the primary users of BEF values, using them in ballast purchasing decisions for selection of products compliant with regulations. Acuity Brands also indicated that a change in metric would not impact the end-user as much it may impact luminaire manufacturers. (Acuity Brands Lighting, Public Meeting Transcript, No. 9 at pp. 45–46) DOE understands that the lighting design process involves metrics other than BEF. Lamp, ballast, and luminaire combinations may be more or less efficient when analyzed as a complete system. End-users may make their purchasing decisions from this system viewpoint. DOE appreciates this comment; however, DOE proposes the use of transfer equations to convert BE values to BEF for consistency with use of the BEF metric in 42 U.S.C. 6295(g)(5) and (g)(8).

The Joint Comment suggested that an alternate metric should account for all power loads served by the ballast, including lamp arc power, cathode power, and standby power consumption. (Joint Comment, No. 12 at p. 1) DOE understands the importance of capturing all power loads served by a fluorescent lamp ballast. DOE notes that BEF does capture all power modes listed by the Joint Comment (lamp arc power and cathode power) except for standby mode consumption. However, DOE does not believe it is feasible to incorporate standby power into the BEF metric. The BEF metric relates light

[11] Ballast efficiency aims to capture the electrical efficiency of a ballast by eliminating usage of lamps and photometric measurements in the test method. Ballast efficiency equals ballast output power divided by ballast input power. *See* section III.E.4.

[12] Relative system efficacy provides a greater range of comparability among ballast types in comparison to ballast efficacy factor. RSE is based on the BEF metric and creates minimal incremental testing burden. *See* section III.E.4.

output (relative to a reference system) to input power. Ballasts that produce more light using the same input wattage have a larger BEF value. Standby mode power, however, performs a different function. Instead of using power for light output, standby mode power is used to facilitate activation or deactivation of other functions (active mode functions, *i.e.,* light output) by a remote switch. Because BEF is a measure of light output divided by input power and not energy consumption, DOE does not believe it is feasible to incorporate a measure of standby mode energy use into the BEF metric for active mode energy consumption. While DOE's preliminary determination of the scope of coverage in the fluorescent lamp ballasts standards rulemaking does not include ballasts capable of operating in standby mode, if the scope of coverage changes to include these ballasts, DOE will set separate standby mode energy conservation standards. Test procedures for the measurement of standby mode energy consumption for fluorescent lamp ballasts can be found in Appendix Q.

E. Test Procedure Improvement Options

Given that alternative methods of testing may result in reduced measurement variation compared to the existing test procedure for BEF, DOE considered three new methods for measuring the efficiency of a ballast and one improved version of the existing method. The first method is called the resistor-based ballast efficiency method, and requires first measuring an estimate of ballast electrical efficiency when operating a resistor load and then converting the estimate to BEF. The second method, called the lamp-based ballast efficiency method, involves measuring ballast efficiency using a lamp as the ballast load and then converting that BE to BEF. The third method makes small changes to the existing test procedure to improve the precision of BEF measurement. The fourth method measures relative system efficacy, which is a variation of ballast efficacy factor that is more comparable across ballast types. While DOE proposes the first method to be used as the new test procedure for determination of fluorescent lamp ballast energy consumption, DOE is still considering all of these options for improvement of the test procedure and therefore invites comments on all alternative methods. The following sections discuss the merits and drawbacks of the four methods.

1. Resistor-Based Ballast Efficiency Correlated to Ballast Efficacy Factor

NEMA suggested at the framework document public meeting for the fluorescent lamp ballast standards rulemaking that DOE should consider using the BE metric. (NEMA, Public Meeting Transcript, No. 9 at p. 32, pp. 37–38) Following the public meeting, DOE participated in the NEMA task force on ballast efficiency through June 2009. Through a series of conference calls and meetings, DOE learned about the resistor-based BE method and participated in its development for four-foot 32W MBP T8 normal ballast factor ballasts. Using the data gathered and methodology used in the NEMA task force DOE then continued development of the proposed test procedure for other lamp types. DOE defined additional resistor values, conducted extensive testing for both BE and BEF in many product classes, created transfer equations so that BEF values could be reported, and specified instrumentation specifications in its development of the proposed test procedure.

Ballast efficiency equals lamp arc power divided by ballast input power. Ballast efficiency aims to capture the electrical efficiency of a ballast by eliminating usage of lamps and photometric measurements. Instead of using a lamp and measuring light output, the resistor-based BE method uses resistors (a resistor load bank) to simulate the lamp and makes an electrical measurement of power through the arc-resistor. Because a resistor can be manufactured with much smaller performance tolerances than a fluorescent lamp, the resistor introduces much less variation into the operating characteristics of the ballast.

NEMA commented that a BE measurement does not require lamp electrical and photometric measurements and, thus, is both easier to execute and more accurate. NEMA also stated that BE measurements have lower measurement variation (on the order of 1 to 2 percent) between test facilities and do not require ANSI standards for lamps that the ballast is designed to operate. NEMA believes that the ballast efficiency metric could be used to compare all ballasts of a given type (*e.g.,* all instant-start ballasts, all programmed-start ballasts), regardless of the lamp types that the ballasts support (including lamp types yet to be developed). (NEMA, Public Meeting Transcript, No. 9 at pp. 25–27, p. 36, pp. 76–77, pp. 100–101)

DOE agrees that ballast efficiency would likely show less variation than BEF and would allow for more equitable comparison among ballasts operating different numbers of lamps or lamp wattages. As discussed in section III.C, much of the variation inherent in the existing test procedure is due to variation among reference lamps. The resistor-based BE method reduces much of the measurement variation due to reference lamps by using a resistor load bank to simulate the load placed on a ballast during the measurement of input and output power. Decreased measurement variation allows for more precise standard setting and certification, compliance, and enforcement testing. DOE acknowledges that the BE metric would allow for comparability across large portions of the ballast market and that such comparability provides benefit to consumers. DOE proposes conversion to BEF values, however, to measure energy efficiency in a repeatable manner that provides comparison for products in the same product class and that is also consistent with the statutory metric set forth at 42 U.S.C. 6295(g)(5) and (g)(8).

DOE notes that use of ANSI standards would be required for lamps in today's proposed test method because of the need to define the ballast factor of a ballast. Ballast factor is a necessary input to the transfer equations between BE and BEF as discussed in section III.F.5. Because DOE proposes to test a ballast using only one lamp type, however, new lamps without ANSI standards will not affect the test procedure. The test procedure indicates using currently-available and ANSI-specified lamps for the measurement and calculation of ballast factor.

While NEMA commented that BE is the best descriptor for instant-start energy efficiency measurements, NEMA also stated that electrode heating effects should be taken into account for rapid-start and programmed-start systems (NEMA, Public Meeting Transcript, No. 9 at pp. 37–39). The use of electrode heating impacts the ratio of ballast input power to power dissipated in the lamp arc. Unlike instant-start ballasts, programmed-start and rapid-start ballasts use a portion of the ballast input power to heat the electrodes. Ion bombardment at the electrode (known as sputtering) during the voltage pulse deteriorates the lamp electrode over time. Electrode heating reduces the magnitude of the voltage pulse required to start a lamp, thereby increasing lamp lifetime for applications that require frequent on and off switching. Because the resistor-based BE test method measures only the power across the lamp arc resistor, measured output power (lamp arc power) for ballasts such as rapid-start and some

programmed-start ballasts tends to be smaller than the true total ballast output power. Instant-start ballasts are less affected by this issue because these ballasts do not employ electrode heating. From a lighting efficiency perspective, the BE metric captures the percentage of input power utilized for lighting in the output stage. DOE believes accounting for output power in this way is useful because it does indicate that instant-start ballasts use a greater percentage of input power in the direct production of light. The fluorescent lamp ballast standards rulemaking will consider the impact of starting method on consumer utility and will set energy conservation standards accordingly.

DOE investigated the possibility of measuring the total output power of a ballast for the BE metric to include electrode heating and lamp arc power. To measure the total output power across the entire resistor load bank, a user needs to measure the electrode and lamp arc voltage separately. DOE found this measurement to introduce too much error through capacitance to ground and loading effects on the ballast during high-frequency operation. Accordingly, DOE has tentatively concluded that reducing the number of measurements to ensure a more accurate measurement is the more reasonable approach. Therefore, DOE proposes measuring the voltage drop across the lamp arc resistor and the input current to the resistor load bank to calculate output power for the ballast efficiency metric.

GE commented that ballast manufacturers do not have control over the performance of a lamp or the measurement variation associated with the usage of reference lamps in the existing test procedure. GE noted that the resistor-based BE metric allows ballast designers to meet a specification that is independent of lamp variation. (GE, Public Meeting Transcript, No. 9 at p. 43) DOE understands that ballast designers would prefer ballast energy efficiency to be measured independently from a lamp. DOE agrees that measured BEF is subject to variations in measured lamp wattage and intends to reduce this source of variation. Today's proposed test procedure reduces the effect of reference lamp variation on variation in BEF.

DOE also believes that industry is starting to adopt BE method. NEMA has already initiated the usage of BE in its Premium Ballast Program, where BE is used in an alternative verification procedure. NEMA invited DOE and other interested parties to participate in the investigation process of the BE metric. (NEMA, Public Meeting Transcript, No. 9 at p. 41, pp. 48–50, p. 53; NEMA, No. 11 at p. 3) In particular, NEMA indicated that it has been studying the measurement variation of ballast efficiency through ballast testing and wished to collaborate directly with DOE. NEMA went on to mention that lamp manufacturers as well as the technical coordinators for ANSI C82.11 and the ANSI C82.11 Annex are involved and that lamp manufacturers are aware of the BE effort and have not voiced any resistance to the concept. (NEMA, Public Meeting Transcript, No. 9 at pp. 23–25, p. 42, p. 45, p. 48, pp. 54–55) ASAP stated that DOE's participation could speed the metrics replacement process and that the presence of non-industry experts would increase ASAP's confidence in the new metric. (ASAP, Public Meeting Transcript, No. 9 at p. 47, p. 49)

DOE participated in the NEMA task force on ballast efficiency by taking part in conference calls, providing technical expertise, and participating in ballast testing. NEMA measured ballast efficiency using the resistor-based BE method through a round robin activity (involving multiple ballast manufacturers and independent test labs) for ballasts that operate 32W, 4-foot medium bipin T8 lamps. Using these data, the task force honed the details of the test method and examined the level of variation present in the data. DOE's involvement with the NEMA task force was for the purpose of participating in round robin testing. Once testing was complete, DOE finalized development of today's proposed test procedure.

DOE believes the resistor-based ballast efficiency method reduces measurement variation, in comparison to the existing test method, to a greater extent than RSE or the improved light-output-based test procedure. DOE prefers a test procedure with reduced variation as it will allow for more precise standard setting and certification, compliance, and enforcement testing. DOE invites comment on the effectiveness of the resistor-based BE test method and its expected improvement in measurement variation.

2. Lamp-Based Ballast Efficiency Correlated to Ballast Efficacy Factor

As an alternative to the resistor-based ballast efficiency method (with results correlated through transfer equations to BEF) discussed in the previous section, DOE also considered using a similar method using a lamp (rather than a resistor load bank) as the ballast load. This arrangement has several potential advantages over today's proposed method. As ballasts are designed to operate lamps, not resistors, testing the efficiency of a ballast while operating a lamp may provide for a more accurate representation of power consumption and efficiency than when operating a resistor. For example, a lamp is a dynamic load which changes impedance in response to being operated at different powers. In order to account for this effect using the resistor-based ballast efficiency method, DOE proposes using separate resistors for different bins of ballast factor (as discussed in section III.F.5). Using a lamp load to test ballast efficiency, would allow manufacturers to use a single lamp to act as the appropriate load for ballasts of all ballast factors. Also, as discussed in section III.F.8, DOE found that several ballasts are incompatible with the resistor-based method of testing ballast efficiency. In order to provide a viable test procedure for these ballasts, DOE proposes that manufacturers use the light output-based test to measure BEF directly. Using lamp-based ballast efficiency method could maintain a consistent testing procedure across these ballast types. Below is a brief summary of the lamp-based ballast efficiency (correlated to ballast efficacy factor) test method.

Similar to the resistor-based ballast efficiency method, in the lamp-based ballast efficiency method, input and output power measurements would be simultaneously taken by the technician while the ballast is operating a lamp (specified by the test procedure). To calculate ballast efficiency, the technician would divide the measured output power by the measured input power. More specifically, a lamp would be seasoned at least 12 hours prior to testing to ensure stable electrical characteristics. The lamp and ballast pairing would be selected based on DOE's determination of the most common wattage lamp a ballast operates and the maximum number of lamps a ballast is designed to operate. The lamp or lamps, selected for consistency with the specifications in ANSI C78.81–2005, would be mounted in a standard strip fixture according to ANSI C82.1–2004 and ANSI C78.81–2005. Ballast and output power would be measured using a suitable power analyzer and current probe. DOE would consider the same specifications as proposed the resistor-based method as follows.

Instrumentation for current, voltage, and power measurements would be selected in accordance with ANSI C78.375–1997 Section 9, which specifies that instruments should be "of the true RMS type, essentially free from wave form

errors, and suitable for the frequency of operation." Instrument performance could be further specified within the guidelines of the ANSI C78.375–1997 and ANSI C82.2–2002. Specifically, current would be measured using a galvanically isolated current probe/monitor with frequency response between 40 Hertz (Hz) and 20 MHz. In addition, voltage would be measured directly by a power analyzer with a maximum 100 picofarad (pF) capacitance to ground and have frequency response between 40 Hz and 1 MHz.

Once the ballast is connected to the lamp and fixture, the ballast would be energized at its highest rated input voltage and the lamp and ballast system would be stabilized for up to one hour (at least fifteen minutes) as determined in ANSI C78.375–1997. Within one hour of energizing the ballast and after the lamp and ballast system have stabilized, the technician would record the input power and sum of the output powers measured for each lamp. The technician would then divide the total output power by the input power to yield BE. Finally, if DOE were to adopt the lamp-based BE method, similar to the resistor-based BE method, DOE would establish correlation relationships between BE and BEF.

While DOE recognizes the several advantages to the lamp-based BE method (discussed earlier), DOE tentatively believes that testing for BE using resistor load instead of a lamp load would result in reduced measurement variation by eliminating lamp-to-lamp variability. At this time, DOE does not have test data to support the validity of the lamp-based BE method or for the generation of appropriate transfer equations to correlate lamp-based BE to BEF. DOE requests additional information on this alternative lamp-based BE method, including repeatability and reproducibility statistics and test data. DOE also invites comment on the burden that the lamp-based BE method imposes for testing.

3. Improvements to Existing Test Procedure

As an alternative to the ballast efficiency methods (with results correlated through transfer equations to BEF), DOE considered modifying certain aspects of the existing test procedure. DOE believes that some of the measurement variation inherent in the existing test procedure can be reduced without making fundamental changes. The measurement variation in BEF can be attributed to operating conditions, electrode heating in the reference circuit, variation in measured power of reference lamps, inconsistent output power measurements in determining ballast factor, and ambient temperature. DOE investigated methods for improving the requirements governing these specifications.

The Illuminating Engineering Society of North America (IESNA) Lighting Measurements Testing & Calculation Guide (LM) IESNA LM–9–1999 describes several options for operating a reference lamp. DOE believes that the industry is not uniform in its selection of operating conditions, which results in potential for varied BEF measurements. Under Electrical Settings (section 8.0), IESNA LM–9–1999 states "measurements may be taken with the lamp operating and stabilized at the specified input volts to the reference circuit or, alternatively, measurements may be taken with the lamp stabilized, at the rated lamp power or at a specified current." These different operating conditions can lead to varying reference ballast light outputs for the calculation of ballast factor. For example, if the reference ballast operates the reference lamp such that it produces less light, the ballast factor and BEF of the test ballast will increase. If ballast operators run the reference circuit only at the specified input voltage to the reference circuit, DOE believes the test procedure will be more reproducible between test facilities because only a single operating condition will be permitted. DOE believes using the specified input voltage to the reference circuit is the best option because it is the most common operating condition used by industry and simplest to execute. DOE also notes that the most recent test procedure final rule for general service fluorescent lamps also specifies testing lamps at a constant and specified input voltage. 74 FR 31829, 31834 (July 6, 2009).

The existing ballast test procedure is unclear as to whether electrode heating should be used in the reference circuit. Electrode heating is known to increase the efficiency of a lamp, which means the same amount of input power produces more light. Compared to a reference circuit that employs electrode heating, the ballast factor of the test ballast tends to be larger if the reference circuit does not use electrode heating. An issue arises when instant-start ballasts (no electrode heating) are compared to a reference circuit that uses electrode heating. The additional lamp efficiency in the reference circuit decreases the ballast factor and BEF for an instant-start ballast compared to a test method that uses no electrode heating in the reference circuit. Although DOE acknowledges the effect on BEF due to electrode heating in the reference circuit for instant-start test ballasts, it notes there are no industry supported standards defining reference circuit operating conditions for medium bipin, miniature-bipin, and recessed double contact lamps without electrode heating. These lamps are specified in ANSI standards according to operation with reference ballasts using electrode heating, but instant-start, rapid-start, or programmed-start ballasts can operate these lamps. One cannot simply remove electrode heating from the circuit, as it would alter the way the ballast operates the lamp. Without industry standards, DOE is unable to quantify the effect new operating conditions might have on ballast factor. DOE expects the effect on BEF as a result of increased of lamp efficiency in the reference circuit to be relatively small and consistent among all instant-start ballasts such that no particular product is affected to a greater or lesser extent than any other product. DOE believes that requiring electrode heating in the reference circuit for all ballasts that operate medium bipin, miniature-bipin, and recessed double contact lamps would limit potential variation between test facilities.

The existing test procedure specifies that the reference lamp electrical characteristics must not vary more than 2.5 percent from the specifications in the ANSI C78 Series (1972 Edition and 1975 Supplement) for fluorescent lamp electrical characteristics. While this spread in operating conditions is less than the general requirements for the manufacturing of fluorescent lamps, it still leads to much of the variation in ballast input power and BEF. Tightening the tolerance on lamp electrical characteristics to ± 1 percent of the specifications found in the ANSI C78 Series (1972 Edition and 1975 Supplement) would decrease measurement variation due to variability in measured lamp power. DOE believes this change alone could result in a large reduction in measurement variation.

Decreasing the tolerance for ambient temperature would also reduce measurement variation. Differences in ambient temperature change the effective load a lamp places on a ballast which affects BEF through changes in the input power measurement. DOE found that changes in ambient temperature as small as 1 °C resulted in changes in BEF as large as 1.5 percent. DOE believes limiting ambient temperature to 25 °C ± 0.5 °C would reduce the measurement variation of BEF.

In response to the fluorescent lamp ballast standards rulemaking framework document, DOE also received several comments related to the ANSI standard referenced by the current fluorescent lamp ballast test procedure. In written and verbal comments, NEMA acknowledged that ANSI C82.2–1984 cited in the current fluorescent lamp ballast test procedure is intended only for low-frequency ballasts and, thus, can be confusing for technicians attempting to test high-frequency electronic ballasts. NEMA indicated that ANSI is creating an update of ANSI C82.11–2002 and the associated C82.11–2002 Annex (collectively known as ANSI C82.11 Consolidated-2002 [13]) that specifies an appropriate measurement method for high-frequency electronic ballasts. (NEMA, Public Meeting Transcript, No. 9 at pp. 71–73; NEMA, No. 11 at p. 2)

DOE agrees that the ANSI C82.2–1984 cited in the current test procedure may be confusing for high-frequency ballast operation. Thus, DOE believes updating ANSI C82.2–1984 to ANSI C82.2–2002 [14] and indicating the use of ANSI C82.11–2002 and ANSI C82.11 Annex would improve the clarity of the electronic ballast test method. DOE believes these changes would reduce measurement inconsistencies but not affect the measured energy efficiency of the ballast. Specifically, DOE believes the input power measurement of ANSI C82.2–2002 reduces the interference of instrumentation on the input power measurement as compared to ANSI C82.2–1984. DOE also believes, however, that because modern instrumentation does not significantly interfere with input power measurements, the differences between the input power measurements of the two test procedures are negligible. DOE believes ANSI C82.2–2002 should be used as the guide for measurement for both high- and low-frequency ballasts. For ballast operating conditions, DOE believes ANSI C82.1–2004 should be used for low-frequency (60 Hz) ballasts and ANSI C82.11 Consolidated-2002 for high-frequency ballasts. As discussed later in section III.F.9, while DOE is proposing to adopt the resistor-based BE test method for compliance with any future amended standards (using transfer equations so BEF values can be reported), DOE also proposes updating the ANSI C82.2–1984 reference in the existing test procedure for purposes of compliance with the existing standards. DOE invites comment on this issue.

In the existing test procedure, ballast factor can be calculated either as a ratio of test and reference circuit light output or as a ratio of measured lamp power. Requiring light output measurements to be used for all starting methods in the calculation of ballast factor should reduce measurement variation and increase the consistency and comparability of results. In instant-start systems, power measurements are possible because fewer measurements are required to measure lamp power. For programmed-start and rapid-start ballasts, two wires attach to each end of the lamp, requiring additional voltage and current measurements compared to the instant-start system. During high-frequency operation, these extra measurements make it difficult to accurately capture lamp power due to capacitance and loading effects on the ballast. For this reason, light output measurements are used for rapid-start and programmed-start ballasts for the measurement of ballast factor. Although the existing test procedure indicates the usage of power measurements for instant-start ballasts, industry practice has been to use light output measurements for all starting methods. DOE believes the use of light output for the measurement of ballast factor for all ballast types would render the values of BF more consistent between testing facilities.

Many ballasts are capable of operating lamps with different lamp wattages. For example, a ballast designed to operate two four-foot 32W medium bipin (MBP) T8 lamps can also operate two 30W, 28W, or 25W lamps. The BEF will vary based on the rated wattage of the lamp operated by the ballast. When a ballast operates a lamp with a lower rated wattage, BEF tends to increase due to reduced ballast input power. In an improved light-output-based test procedure, DOE would specify particular lamp-and-ballast combinations for testing such that a ballast is only tested while operating one specific load. DOE believes this method would mitigate testing burden on manufacturers, provide a representative measurement of ballast energy consumption, and make the test procedure more flexible to new lamp-and-ballast combinations. *See* section III.F.2 for additional detail on using one lamp (resistor) and ballast combination for testing.

To test every lamp-and-ballast combination, manufacturers would need to purchase and maintain the requisite number of reference lamps (or in the case of the resistor-based BE method, resistors) for every lamp wattage that a ballast can operate. In the example mentioned above, this would require six lamps (or resistors) in addition to the two required for the 32W lamp. For ballasts that operate more than two lamps, the impact on manufacturers is more significant. Furthermore, ANSI standards do not exist for every reduced wattage lamp. Because industry has not reached a consensus regarding the performance characteristics of each lamp, DOE did not choose a resistor to represent those lamps for which an industry standard does not exist. Thus, to mitigate the testing burden on manufacturers, in the fluorescent lamp ballast standards rulemaking, DOE is considering setting standards based on the ballast operating the most common lamp wattage. Consequently, the test procedure only requires one lamp-and-ballast combination to be tested in each product class. *See* section III.F.2 for additional discussion on why DOE believes testing a ballast while operating one representative load is a reasonable means of determining the efficiency of a ballast.

Similar to lamp wattage, ballasts are designed to operate a certain maximum number of lamps. Many ballasts can operate fewer than the maximum number of lamps. As discussed in section III.F.2, DOE found testing a ballast on all its possible loads (possible numbers of lamps) was unnecessary. DOE believes requiring testing of fluorescent lamps ballasts while operating the maximum number of lamps for which the ballast is designed would reduce testing burden on manufacturers and produce representative energy consumption measurements. Therefore, this test procedure would not require testing of ballasts with every possible number of lamps it can operate.

Some ballasts are also capable of operating at multiple input voltages (universal voltage ballasts). The existing energy conservation standards require ballasts to be tested at both 120 V and 277 V, which increases the testing burden on manufacturers. The Joint Comment suggested testing these multi-voltage ballasts at 277 V for commercial ballasts and 120 V for residential ballasts. (Joint Comment, No. 12 at p. 5) DOE believes that 277 V is the most common input voltage for commercial ballasts and that 120 V is the most common for residential ballasts. Therefore, DOE agrees with the Joint Comment and has tentatively concluded that a revised light-output-based test procedure should test all universal voltage commercial ballasts at 277 V and universal voltage residential

[13] American National Standards for Lamp Ballasts—High Frequency Lamp Ballasts—Supplements," approved January 17, 2002.

[14] "American National Standards for Lamp Ballasts—Method of Measurement of Fluorescent Lamp Ballasts," approved June 6, 2002.

ballasts at 120 V.[15] Ballasts capable of operating only at a single voltage would be tested at the rated ballast input voltage.

DOE believes the aforementioned improvements to the existing test procedure would decrease measurement variation. Furthermore, DOE does not believe the changes would result in significantly increased testing burden for manufacturers. DOE believes, however, that the proposed resistor-based BE method reduces measurement variation to a greater extent than the improved light-output-based test procedure while also imposing only a nominal increase in testing burden. DOE invites comment on the effectiveness of the improved light-output-based test procedure to reduce measurement variation and on the burden it imposes for testing.

4. Relative System Efficacy

DOE considered the RSE metric as another alternative to the existing BEF test procedure. The RSE metric is intended to normalize the existing metric of BEF to rated lamp efficacy to make it more comparable across ballasts operating different numbers of lamps and different lamp wattages. DOE received comments suggesting use of the RSE metric in response to the framework document for the fluorescent lamp ballast standards rulemaking.

NEMA, NYSERDA, and the Joint Comment recommended the investigation of RSE as a potential replacement for the BEF metric. According to comments, the relative system efficacy metric would allow comparisons to be made across different ballast types, thereby enabling the usage of fewer product classes in the energy conservation standard. (NYSERDA, Public Meeting Transcript, No. 9 at pp. 27–28, p. 75; NEMA, Public Meeting Transcript, No. 9 at p. 100; Joint Comment, No. 12 at pp. 6–7)

Relative system efficacy is equal to BEF divided by 100 and multiplied by total rated lamp power. RSE provides a greater range of comparability among ballast types in comparison to BEF. Because RSE is based on the BEF metric, it creates minimal incremental testing burden over the existing test procedure. RSE allows for improved comparison among ballasts designed to operate different number of lamp systems and ballasts designed to operate different lamp wattages. Lamp and ballast systems operating more lamps or higher-rated-wattage lamps tend to have lower BEF values. When these lower BEF values are multiplied by correspondingly larger total-rated-lamp powers, the resulting value is more comparable across different product classes.

NEMA stated that it is attempting to correlate the BE and RSE metrics to the existing BEF metric. NEMA also stated that the RSE metric is likely to be more closely correlated to BE than the BEF metric is to BE. (NEMA, Public Meeting Transcript, No. 9 at p. 28, p. 33) DOE believes NEMA may be correct in its prediction that RSE is more closely correlated to BE than BEF to BE. However, DOE proposes the use of transfer equations to convert BE values to BEF for consistency with use of the BEF metric in 42 U.S.C. 6295(g)(5) and (g)(8). Therefore, DOE did not consider correlating RSE to BE as an option for this proposed test procedure.

Although the RSE metric improves on the BEF metric through increased comparability between product classes with minimal incremental burden, DOE believes RSE would ultimately have the same measurement uncertainty associated with the existing test procedure or the improved light-output based test procedure. In particular, because RSE includes the usage of reference lamps in test measurements, RSE is based on the same varied inputs as BEF. This rulemaking's test procedure revision is intended to reduce measurement variation, and DOE believes the proposed resistor-based BE method reduces measurement variation to a greater extent than RSE. DOE invites comment on its tentative decision not to adopt RSE as a potential test method.

F. Proposed Test Procedure

In consideration of the comments and analysis discussed above, today's proposed test procedure for measuring active mode power consumption is the resistor-based BE method, with results correlated to BEF through the use of transfer equations. This method consists of the following steps: (1) Measurement of input power to the ballast; (2) measurement of simulated lamp arc power to estimate ballast output power; and (3) correlation of the ballast efficiency metric to BEF. DOE believes the resistor-based BE method results in the largest reduction in measurement variation over the existing test procedure. Interested parties are invited to comment on the proposed resistor-based ballast efficiency method, the lamp-based ballast efficiency method, the improvements to the BEF method, and the RSE method described in section III.E, or on any other procedures they believe would be appropriate.

In the sections 1 through 8 that follow, DOE discusses the language proposed for a new appendix Q1 to subpart B of 10 CFR part 430 (hereafter "appendix Q1"). The new appendix Q1 will contain the new test procedure that correlates measured BE to BEF that will be used for the purposes of compliance with future amended standards. Section 9 describes an update to the existing test procedure in appendix Q to subpart B of 10 CFR part 430. The change to appendix Q updates an industry reference from ANSI C82.2–1984 to the current ANSI C82.2–2002. DOE proposes to create a separate appendix Q1 for the proposed new test procedure. DOE will retain the existing BEF test procedure for compliance with existing standards and, once amended standards become effective, for use with ballasts that cannot operate resistors. Section 10 discusses amendments DOE is proposing regarding references to ANSI C82.2–2002.

1. Test Conditions

DOE proposes that prior to measurement, the ballasts would be thermally conditioned at room temperature (25 °C ± 2 °C) for at least 4 hours. During this conditioning period, ballasts are not operating or energized. Providing time for thermal conditioning helps to generate reproducible results as electrical products' performance characteristics tend to change in response to temperature.

In addition, DOE proposes that ballasts be tested using the electrical supply characteristics found in section 4 of ANSI C82.2–2002 with the following changes: (1) Ballasts capable of operating at a single voltage would be tested at the rated ballast input voltage; (2) users of universal voltage ballasts would disregard the input voltage directions in section 4.1 of ANSI C82.2–2002 that indicate a ballast capable of operating at multiple voltages should be tested at both the lowest and highest USA design center voltage; and (3) manufacturers use the most recent revisions to the normative references associated with ANSI C82.2–2002. Instead of testing universal voltage ballasts at the voltages indicated in ANSI C82.2–2002, DOE believes that testing ballasts at a single voltage is more appropriate and less burdensome. DOE believes 277 V is the most common input voltage for commercial ballasts and that 120 V is the most common for residential ballasts. Therefore, DOE proposes that all universal voltage commercial ballasts be tested at 277 V

[15] ANSI C82.77–2002 specifies commercial ballasts must have a power factor greater than 0.9, while residential fluorescent ballasts (with an input power below 120 W) must have a power factor of 0.5 or greater. Residential ballasts are designed and labeled for use in residential applications.

and that universal voltage residential ballasts be tested at 120 V.

2. Test Setup

The resistor load bank is a network of resistors used to model the load placed on a ballast by a fluorescent lamp. It consists of five resistors, two for each of the two electrodes and one for the lamp arc. In a lamp, current can arc from one electrode to the other from any two positions (known as hotspots) on the lamp electrodes. The position can be different each time the current flow alternates from one direction to the other. The exact position determines the effective resistance of the electrode by determining the distance through which current must travel in the electrode. If the hotspots are at the ends of the electrodes for an instant-start system, the total electrode resistance will be greater than if the hotspots are both at the center of the electrode. When the arc begins at the center of the electrode, the length of the resistor is divided in half, creating a circuit with two equivalent resistors in parallel. The hotspots' positions change over time, but the design of the resistor load bank is limited to one fixed position. Therefore, DOE needed to select a position for the hotspot, and model the resistor load bank accordingly.

The selection of the hotspot position was based largely on the design of rapid-start and programmed-start ballasts because the position of the hotspot impacts the measured value of BE. These ballasts use two wires to carry ballast output power to the lamp. One of these wires supplies power for electrode heating, while the other provides power for the lamp arc. Electrode heating requires significantly less power than the lamp arc, so different levels of current and voltage exist in the two ballast wires leading to the lamp. Because these two wires are not labeled by the respective loads they serve, the user does not know which wire is which. With two different resistors, depending on which wire was attached to the larger or smaller resistor, the circuit would display two different output powers. Therefore, DOE modeled a lamp with the hotspot in the middle of the electrode so that the resistance of each path would be equal. Section III.F.7 describes how DOE determined resistor values for each type of lamp.

DOE proposes that the ballast be connected to a main power source and to the resistor load bank according to the ballast manufacturer's wiring instructions. Where the wiring diagram indicates connecting the ballast wire to a lamp, the lead would be connected to a resistor load bank. Ballast wire lengths would be unaltered from the lengths supplied by the ballast manufacturer to accurately capture the ballast efficiency of the product in its original manufactured form. Wires running from the load bank to the power analyzer would be kept loose or unbundled and at a minimal working length, to reduce error introduced to the ballast circuit because of current bypassing the ballast.

DOE also proposes that the ballast be connected to the resistor load bank associated with the most common wattage lamp the ballast is designed to operate. In many cases, a ballast can operate several reduced wattage lamps in addition to the most common variety. For example, ballasts designed to operate four-foot MBP T8 lamps can operate 32 W, 30 W, 28 W, and 25 W lamps. Because ballasts operate differently when connected to different loads, a single resistor load bank is unable to simulate the load induced by all lamp wattages. To test every lamp-and-ballast combination, manufacturers would need to purchase and maintain the requisite number of reference lamps (or in the case of the proposed method, resistors and lamps) for every lamp wattage that a ballast can operate. Maintaining this number of lamps and resistors would impose a significant burden on manufacturers. Additionally, ANSI standards do not exist for every reduced wattage lamp. Because industry has not reached a consensus regarding the performance characteristics of each lamp, DOE could not choose a resistor to represent those lamps for which an industry standard does not exist. Thus, to mitigate the testing burden on manufacturers, the proposed test procedure would only require one lamp-and-ballast combination to be tested in each product class. Therefore, DOE proposes a test procedure based on the ballast operating the most common lamp wattage, resulting in a ballast efficiency that represents the way the product is primarily used in the market and reducing the testing burden on manufacturers.

DOE proposes to test fluorescent lamp ballasts operating the maximum number of lamps for which they are designed. Many ballasts can operate fewer than the maximum number of lamps they are designed to operate. DOE compared the BEF of a ballast operating the maximum number of lamps for which it was designed to a ballast operating the same number of lamps but which was designed to operate more lamps. For example, a 4-lamp ballast operating two lamps has a similar efficiency to a 2-lamp ballast operating two lamps. When operating the same number of lamps, DOE found no correlation between the ballasts capable of operating different maximum numbers of lamps and BEF. Therefore, today's proposed test procedure requires testing of a ballast only while it is operating the number of resistor load banks equal to the maximum number of lamps for which it was designed.

In response to the framework document for the fluorescent lamp ballast standards rulemaking, the Joint Comment stated that DOE should establish performance requirements at specific dimming levels (such as 100, 75, 50, and 25 percent) such that dimming ballasts can be consistently compared. (Joint Comment, No. 12 at p. 5) DOE agrees that a test procedure for dimming ballasts should specify the dimming level or levels at which ballast efficiency should be tested. The preliminary determination of the scope of coverage in the fluorescent lamp ballast standards rulemaking, however, does not include dimming ballasts because these ballasts have an overall market share of about one percent and are already used in energy-saving systems. Thus, DOE did not include them in the preliminary scope of coverage. If DOE determines in the fluorescent lamp ballast standards rulemaking that the scope of coverage should include dimming ballasts, DOE will develop a test procedure for these ballasts. DOE invites comment on potential methods of measurement for determining the efficiency of dimming ballasts in the event dimming ballasts are added to the scope of coverage in the ongoing fluorescent lamp ballast standards rulemaking.

Ballast wiring is different depending on starting method. Instant-start ballasts have only one wire connecting the ballast to each end of the load, while rapid-start and programmed-start ballasts have two wires connected to each end. The second wire in rapid-start and programmed-start systems is used for electrode heating. The resistor load banks have two input wires connected to two electrode resistors. In this test procedure, DOE proposes that the single output wire on an instant-start ballast be shorted with the two input electrode resistors to be consistent with current industry practice. DOE notes that this circuit topology is consistent with the wiring of lamp-and-ballast systems for bipin lamps. For example, a four-foot 32 W MBP T8 lamp has two pins that are shorted together with the ballast output wire using a jumper wire or an adapter. A programmed-start ballast would not need to be shorted together because the ballast uses two wires for ballast output between the ballast and the lamp.

DOE proposes that the power analyzer voltage leads be attached to the wires leading to and from the main power source for input voltage measurements and that the current probe be placed around the same wires for input current. The power analyzer should have at least one channel per lamp plus one additional channel for the ballast input power measurement.

Figure 1 shows the instrumentation placement for the output power measurement for ballasts that operate MBP, recessed double contact (RDC), and miniature-bipin (miniBP) lamps and Figure 2 shows placement for ballasts that operate single pin (SP) lamps.

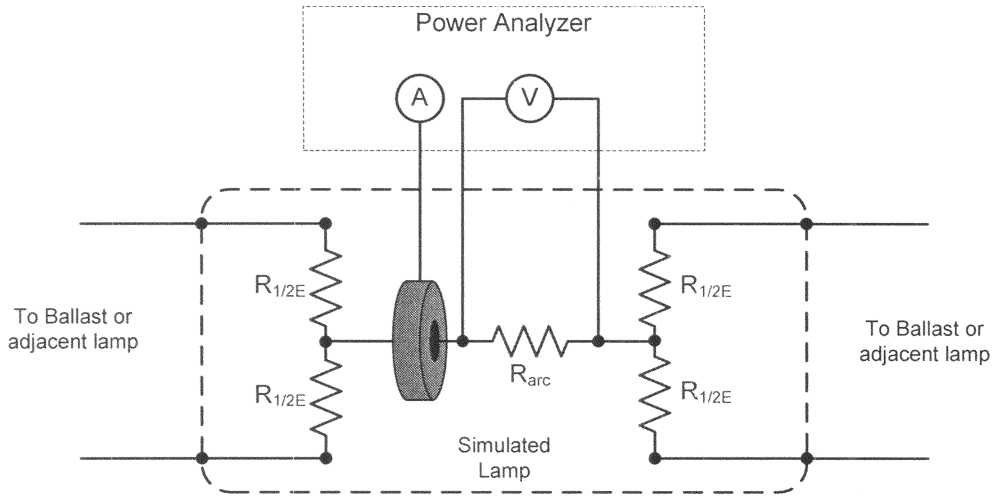

Figure 1. Instrumentation Placement for Ballasts that Operate MBP, RDC, and MiniBP Lamps

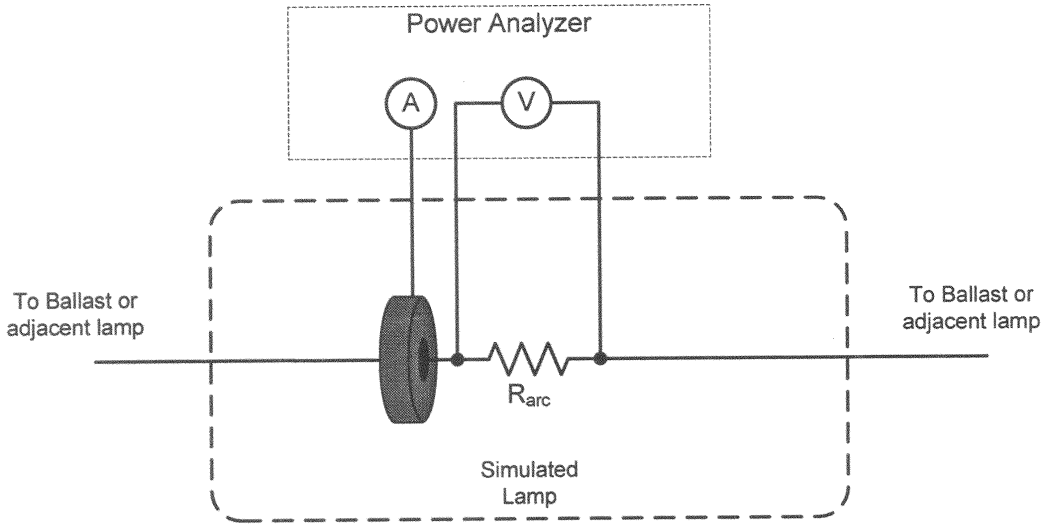

Figure 2. Instrumentation Placement for Ballasts that Operate SP Lamps

3. Test Method

ANSI C82.2–2002 specifies operating the reference lamp with the test ballast for less than 30 seconds to reduce the effect of lamp restabilization on light output and to give the ballast less time to increase in temperature. Following the protocol established in ANSI C82.2–2002, a lamp is first stabilized on a reference ballast and then transferred to a test ballast without being extinguished. The output of a fluorescent lamp remains relatively constant (steady-state) when operated under defined conditions. When these defined conditions change (*e.g.,* switching from a reference ballast to a test ballast) the lamp output

characteristics also change. This change is not immediate, so by limiting the time the test ballast is driving the reference lamp, the reference lamp is kept as close as possible to its reference conditions. In addition, as a ballast operates, it increases in temperature until it reaches steady-state, though it may take more than thirty minutes for a ballast to increase from room temperature to steady-state temperature. Limiting test ballast operation to thirty seconds limits the increase in ballast temperature. DOE believes that over the course of thirty seconds, the change in lamp operating characteristics has a more significant impact on light output than changes in ballast temperature.

For the proposed resistor-based test procedure, DOE found that one minute of operation was required to provide sufficient time to prepare for the data capture while maintaining the ballast and resistor load bank near room temperature. DOE recognizes that it is extending the time of operation compared to the procedures outlined in ANSI C82.2–2002, but it does not believe the additional 30 seconds allow for a significant increase in temperature of the ballast or in the resistance of the resistor load bank. As previously stated, DOE believes the main driver in ANSI's decision to limit operation to 30 seconds was the change in lamp operating characteristics, not ballast temperature. DOE proposes that after one minute of data capture the ballast be switched off, so that the resistor load bank duty cycle not exceed 50 percent (that is, for every operational minute, the load should be rested for one minute) to minimize any issue with thermal drift of the resistor load bank. Thermal drift describes the phenomenon of a resistor exhibiting a different resistance in response to a change in its internal temperature. DOE believes that operating a resistor load bank for one minute followed by one minute of zero power will sufficiently reduce the opportunity for the resistor load bank deviate from its room temperature resistance rating.

During data acquisition, the power analyzer should measure the input voltage and current and the output voltage and current according to the setup described in section III.F.2. DOE proposes that the measured input parameters be voltage (RMS [16]), current (RMS), power, and power factor measured in accordance with ANSI C82.2–2002. The measured output parameters would include lamp arc resistor voltage, current, and power. Instrumentation for current, voltage, and power measurements would be selected in accordance with ANSI C78.375–1997 [17] Section 9, which specifies that instruments should be "of the true RMS type, essentially free from wave form errors, and suitable for the frequency of operation." DOE proposes to further specify instrument performance within the guidelines of the ANSI C78.375–1997 and ANSI C82.2–2002. Specifically, current would be measured using a galvanically isolated current probe/monitor with frequency response between 40 Hertz (Hz) and 20 MHz. In addition, voltage would be measured directly by a power analyzer with a maximum 100 picofarad (pF) capacitance to ground and have frequency response between 40 Hz and 1 MHz.

In addition to making electrical input and output measurements, today's proposed test procedure would also require measurement of ballast factor for the conversion to BEF. As discussed in the ballast factor section of III.F.5, ballast factor affects the apparent load placed on a ballast by a lamp, and consequently the measured BEF. BF helps assign a ballast to a particular product class, and it must be determined empirically. DOE proposes that ballast factor be measured in accordance with ANSI C82.2–2002 section 12, with a few modifications. Because the measurement of ballast factor requires a reference lamp, DOE proposes to adopt some of the improvements to the existing test procedure described in section III.E.3. DOE believes specifying particular electrical operating conditions, clarifying in which circumstances electrode heating should be used in the reference circuit, and using light output measurements instead of power measurements for all ballasts will reduce variation in the measurement of BF. These changes are discussed in greater detail below.

First, DOE notes that there are several options for operating a reference lamp as described in IESNA LM–9–1999. As described in section III.E.3, DOE proposes operating the reference lamp at the specified input voltage to the reference circuit. This method is the simplest to execute and the most common practice in industry. In addition, DOE adopted this method in the test procedure final rule for general service fluorescent lamps. 74 FR 31829, 31834 (July 6, 2009). Second, the existing ballast test procedure is unclear on whether electrode heating should be used in the reference circuit for all ballasts. As described in section III.E.3, the presence or absence of electrode heating in the reference circuit changes the light output of the reference lamp on the reference circuit, thereby changing the measured value of BF. DOE proposes that electrode heating be used in the reference circuit for all ballasts that operate bipin or recessed double contact lamps (MBP, mini-BP, RDC). Single-pin lamps should not use heating in the reference circuit because these ballasts are not capable of undergoing electrode heating and are designed for use with instant-start ballasts. Third, although the existing test procedure requires the usage of power measurements for instant-start ballasts, industry practice has been to use light output measurements for all starting methods. DOE proposes the use of light output for the measurement of ballast factor for all ballast types to make the values of BF more consistent.

In addition, because DOE is considering establishing a ballast efficiency (correlated to BEF) test procedure based on operation of a lamp at the most common wattage, DOE proposes that ballast factor also be measured using the most common wattage lamp. Ballast factor should be measured using a reference lamp with the nominal wattage indicated in section III.F.7 for a given ballast type. This nominal wattage also represents the type of lamp the resistor load bank simulates. Testing each ballast with only the most common wattage lamp produces test results that are most representative of how the end users operate fluorescent lamp ballasts.

DOE does not believe that the usage of reference lamps for the purpose of ballast factor determination creates significant measurement variation. DOE believes that variations in measured lamp power affect ballast input power to a much greater extent than ballast factor. DOE invites comment on the variation of ballast factor due to lamp manufacturing variations and its effect on the measurement variation of BE converted to BEF.

4. Calculations

As described in Equation 1 below, ballast efficiency is equal to output power divided by input power.

$$BE = \frac{\text{Output Power}}{\text{Input Power}}$$

DOE proposes to relate ballast efficacy factor to the measured ballast efficiency

[16] Root mean square (RMS) voltage is a statistical measure of the magnitude of a voltage signal. RMS voltage is equal to the square root of the mean of all squared instantaneous voltages over one complete cycle of the voltage signal.

[17] "American National Standard for Fluorescent Lamps—Guide for Electrical Measurements," approved September 25, 1997.

through the empirically derived transfer equations discussed in section III.F.5.

5. Transfer Equations—General Method

A system of transfer equations is needed for correlating BE to BEF consistent with 42 U.S.C. 6295(g). DOE determined the transfer equations empirically by testing ballasts using both the proposed resistor-based BE and existing BEF test methods. DOE then plotted the results and computed a linear regression to generate an equation for BEF as a function of BE.

The existing test procedure for fluorescent lamp ballasts allows for ballasts to operate the reference lamps under multiple operating modes. The user may operate at constant lamp current, voltage, or power. DOE used constant input voltage to the reference circuits for all of its BEF measurements and for lamp resistor determination. DOE believes this to be the most common industry practice. Therefore, the transfer equations that convert BE to BEF reflect this decision.

Because factors like number of lamps, ballast factor, starting method, and lamp diameter affect the correlation between BE and BEF, DOE considered individual transfer equations for each product class proposed in the fluorescent lamp ballast standards rulemaking. The following paragraphs discuss each of the factors considered in the transfer equation development process. DOE invites comment on the transfer equations.

Number of Lamps

The number of lamps operated by a ballast has a disparate effect on the BE and BEF metrics. BEF decreases for ballasts operating increased number of lamps. This is because ballast input power increases (denominator) but the ballast factor (numerator) does not necessarily change. In contrast, BE changes much less with varying numbers of lamps because the numerator and denominator change by roughly proportional amounts. Therefore, DOE parsed the data into groupings based on the number of lamps the ballast operates. Within these groupings, DOE plotted BE versus BEF and computed a linear regression to generate an equation for BEF as a function of BE.

Ballast Factor

For a given ballast type, ballast factor tends to increase with increased ballast input power. As ballast input power increases, so does the ballast output power and consequently the light output. When a lamp is running at a higher lamp current and power (representative of a ballast with a high BF), lamp impedance decreases and the apparent load the lamp places on the ballast decreases. Therefore, a high BF ballast operating a resistor that simulates normal BF loading will measure a higher BE than when running a load of the appropriate resistance. To account for this change in apparent load with a resistor load bank, DOE identified two options: (1) Modify resistor values to account for the change in apparent load due to lamp current and BF; or (2) conduct all testing with one resistor representing normal BF but develop separate transfer equations for three different ranges of ballast factors (called bins).[18]

For option one, DOE would need to determine resistor values for multiple ballast factors for each ballast type. By appropriately matching resistance to BF, the test procedure would more accurately model the change in apparent load as a function of ballast factor. This method would create an additional burden on DOE at the outset of the test procedure and an even more significant burden on manufacturers. For example, if in order to obtain measurable improvement in testing accuracy compared to option 2, DOE were to assign a separate resistor value to each ballast factor in the low ballast factor product class for 4-foot T8 MBP ballasts, DOE would need to specify four specific resistor values. Specification of multiple resistors based on ballast factor would require the manufacturer to purchase many more resistors than a test procedure that used one resistor for all ballast factors. To limit the impact on manufacturers, DOE could determine resistor values for two to three commonly used BFs per ballast type and establish bins around these ballast factors. Keeping the number of BF-specific resistor values to a minimum would decrease manufacturer burden but still be more burdensome than option 2 without offering any appreciable improvement in testing accuracy compared to option 2.

Option two specifies that ballasts of all BFs are tested using the same resistor value. Under this approach, ballasts designed with a ballast factor different than the ballast factor simulated by the resistor load bank would be operating a load that is non-representative of the effective load placed on the ballast by a real lamp. When testing ballasts of all ballast factors using one resistor, all else held constant, as BF increases, measured BE will tend to increase as well. Because the measured BE will not accurately describe lamp arc power divided by ballast input power, DOE would need to create a scaling technique. DOE can develop transfer equations for converting measured BE to BEF that correspond to bins of ballast factors. Transfer equations could be developed for particular ranges of BF so that DOE can define different relationships between measured BE and BEF for different BF bins. DOE proposes to use three bins because ballasts currently offered in the market are generally centered on three different ballast factors. DOE proposes this option because DOE believes it appropriately balances accurate scaling based on ballast factor with the reduced burden on manufacturers as a result of using one resistor for all ballast factors.

DOE notes that placing ballasts into three bins based on BF results in the measured efficiency of the ballasts with the lowest BF in a particular bin to be relatively smaller than the higher end of the BF bin. Low BF ballasts tend to measure a lower BE than a high BF ballast when operating the same resistor because of the effects of current on lamp impedance discussed previously. This could potentially encourage the industry to produce ballasts at the upper ends of these bins, as the associated energy conservation standard would be less stringent for the higher BF models. DOE invites comment on this issue.

DOE considered two mitigating strategies for reducing the market interference resulting from specifying a small number of BF bins. One possible solution to this problem is to increase the number of BF bins to reduce the range in BF within a bin. DOE was not able to assemble enough data based on the ballast factors currently offered in the market to increase the number of BF bins. The ballast market tends to clump around two to three popular ballast factors, rendering empirical determination of transfer equations for intermediate ballast factors infeasible. DOE also considered creating a continuous function of BE as a function of BF to normalize BE values for the deviation in measured BE as a result of running a ballast on unrepresentative resistive load. These normalized BE values would then be used as inputs to a single transfer equation developed from data obtained by testing ballasts with the ballast factor that the resistive load bank simulates. Similar to efforts to increase the number of BF bins, however, DOE found that the market provided insufficient data for scaling. With only two to three BFs in the data

[18] DOE proposes three ballast factor bins: low, normal, and high. Low-ballast factor ballasts have a ballast factor of 0.78 or less; ballasts designed with a ballast factor between 0.78 and 1.10 are normal-ballast factor; and high-ballast factor ballasts were defined to have a ballast factor of 1.10 or higher.

set, DOE could not be certain of the relationship between BF and measured BE.

Accordingly, based upon the above considerations, DOE has tentatively decided to proceed with option two by developing three transfer equations relating to three different ballasts factor bins. DOE tested ballasts of high-, normal-, and low-ballast factor varieties for each ballast type to develop an equation for BEF as a function of BE specific to the ballast factor type (high, normal, or low). DOE plotted BE and BEF data for a given BF bin (high-, normal-, or low-BF bins) and calculated a linear regression to determine an equation for BEF as a function of BE for the given BF.

Starting Method

Starting method also impacts the correlation between BE and BEF. Instant-start ballasts are in general more efficient than rapid-start and programmed-start ballasts. Because instant-start ballasts do not supply electrode heating, there are fewer losses in the ballasts' internal circuitry and more of the output power goes to the lamp arc. Rapid-start and programmed-start ballasts use part of their output power to heat the lamp electrodes. In short, starting method has nonlinear effects on the light-output-based measurement of BEF and the BE-based measurement of BEF such that specific transfer equations are required for each starting method. Therefore, DOE parsed the data into groupings based on starting method. Within these groupings, DOE plotted BE versus BEF and computed a linear regression to generate an equation for BEF as a function of BE. In the fluorescent lamp ballast standards rulemaking, DOE plans to consider grouping instant-start and rapid-start ballasts in the same product class and programmed-start ballasts in a separate product class based on consumer utility. To create BEF values which are comparable for product classes with instant-start and programmed-start ballasts, DOE proposes to use one transfer equation for converting BE to BEF. This decision was made on the basis that ballasts of the same BE should have the same BEF.

Lamp Diameter

In the fluorescent lamp ballast standards rulemaking, DOE has tentatively determined that there is no distinct consumer utility difference between T8 and T12 ballasts. As a result, DOE is grouping T8 and T12 ballasts in the same product class. At the 2008 public meeting, NEMA commented that BEF measurement requires photometric measurements of a reference lamp attached to the test ballast; thus, BEF values cannot be compared across ballasts that operate different lamp types. (NEMA, Public Meeting Transcript, No. 9 at pp. 124–125; NEMA, No. 11 at p. 6) DOE agrees that under the existing test procedure, the BEF values measured for T8 and T12 ballasts are not comparable because the reference lamps for these ballasts have different rated power. Because certain T8 and T12 ballasts would be subject to the same energy conservation standard (in the preliminary analysis of the fluorescent ballast standards rulemaking these ballasts are in the same product class), DOE proposes to amend the test procedure such that the reported T12 ballast BEF would be comparable to the reported BEF for a T8 ballast. To achieve this, DOE first developed transfer equations based on data for T8 ballasts in a given product class. To generate T12 ballast BEF values which are comparable to T8 ballast BEF values, DOE proposes using the transfer equations developed for the relevant T8 ballasts to generate a BEF for T12 ballasts. As such, a T12 ballast BE value would be used as an input to the relevant T8 transfer equation. The T8 transfer equation would then output a T12 ballast BEF value comparable to BEF values for T8 ballasts. DOE made this decision based on the assumption that T8 and T12 ballasts with the same BE should have the same BEF when reporting compliance with energy conservations standards.

6. Transfer Equations—Testing, Analysis, and Results

In the fluorescent lamp ballast standards rulemaking, DOE has preliminarily categorized ballasts into 70 product classes. In today's test procedure, DOE proposes to generate separate transfer equations for each product class. DOE targeted representative product classes and certain key product classes for extensive testing with the expectation that scaling would be required to establish transfer equations for the remaining product classes. DOE found strong correlation between BE and BEF for the product classes indicated in Table III.1.

DOE believes a linear relationship should exist between BE and BEF for ballasts of the same ballast factor, starting method, number of lamps, and lamp type. All ballasts under these constraints send the same amount of output power to a lamp, and therefore, ballasts of different efficiency vary in input power only. A more efficient ballast requires less input power to yield the same output power as a less efficient ballast. Because both BE and BEF are proportional to the same expression (the inverse of input power), a linear relationship should exist between the two metrics. The test data indicated a linear relationship between BE and BEF, consistent with DOE's expectation. Although DOE tested mostly electronic ballasts, which are generally more efficient than their magnetic counterparts, DOE believes the linear relationship between BE and BEF should exist across all values of BE and BEF. As such, DOE developed linear relationships between BE and BEF such that the equation passed through the origin (a BE of zero should correspond to a BEF of zero). DOE developed transfer equations in the form BEF = slope * BE, establishing a slope for each product class for the conversion of BE to BEF.

Table III.1 Transfer Equation Development Method by Product Class

Ballast and Lamp Type	Starting Method	Ballast Factor	Number of Lamps					
			One	Two	Three	Four	Five	Six
Four-Foot MBP, and Two-Foot U-Shaped	IS and RS (not PS)	High	1	2	3	4	5	6
		Normal	7	8	9	10	11	12
		Low	13	14	15	16	17	18
	PS	High	19	20	21	22	23	24
		Normal	25	26	27	28	29	30
		Low	31	32	33	34	35	36
Four-Foot T5 MiniBP SO	All	High	37	38	---	---	---	---
		Normal	39	40	---	---	---	---
		Low	41	42	---	---	---	---
Four-Foot T5 MiniBP HO	All	All	43	44	45	46	---	---
Eight-Foot SP Slimline	All	High	47	48	---	---	---	---
		Normal	49	50	---	---	---	---
		Low	51	52	---	---	---	---
Eight-Foot RDC HO	IS and RS	All	53	54	---	---	---	---
	PS	All	55	56	---	---	---	---
Residential Ballast, Four-Foot MBP, and Two-Foot U-Shaped	IS and RS (not PS)	All	57	58	59	60	---	---
	PS	All	61	62	63	64	---	---
Sign Ballast	All	All	65	66	67	68	69	70

Gray shading indicates the slope is based on test data directly. Gray shading with diagonal lines indicates the slope is based on a relationship between total rated lamp power and slope. All other product classes (not shaded) have slopes based on scaling relationships. DOE tested ballasts for BE and BEF in underlined product classes.
*IS = Instant-start; RS = Rapid-start; PS = Programmed-start

Based on the test data for 4-foot 32W MBP T8 ballasts, DOE established scaling ratios for ballast factor type, number of lamps operated, and starting method. For ballast factor type, DOE calculated the ratio of the slopes for product classes 2 and 14 compared to product class 8 and used these ratios for scaling all other normal ballast factor product classes to their high and low ballast factor counterparts. For starting method, DOE employed a similar technique to the ballast factor type scaling method. DOE calculated the ratio of the slopes for product class 8 and product class 26 to establish a relationship between the combined instant- and rapid-start ballast product classes and the programmed-start product classes. Again, DOE based scaling for all other combined instant- and rapid-start ballast product classes to their programmed-start counterparts on this ratio between instant- and rapid-start ballast and programmed-start ballasts. For number of lamps operated by a ballast, DOE fit a power regression equation to the slopes for 4-foot MBP T8 instant- and rapid-start normal BF ballasts that operate one, two, or three lamps (product classes 7, 8, and 9). DOE used the equation to extrapolate the slopes for products classes 10, 11, and 12 (four, five, and six lamps) DOE then used the slopes for product classes 7 through 12 to establish ratios between the slopes for ballasts that operate 1, 3, 4, 5, or 6 lamps and the slope for ballasts that operate 2 lamps. Again, DOE based scaling for all other 2 lamp, normal BF ballasts to their 1, 3, 4, 5, and 6 lamp counterparts on the number of lamps ratios generated with product classes 7 through 12.

DOE focused its testing on 4-foot 32W MBP T8 ballasts for the establishment of scaling ratios between BF, number of lamps, and starting method. DOE tested smaller quantities of ballasts from other product classes, but found 8-foot T8 SP slimline ballasts to have a strong correlation between BE and BEF in the available dataset. For 4-foot T5 SO, 4-foot T5 HO, 8-foot RDC HO, and sign ballasts, DOE developed a relationship between total rated lamp power and the slope of the line relating BE to BEF. Total rated lamp power is the sum of the rated lamp wattages (as defined in 10 CFR 430.2) operated by a particular ballast. DOE fit a power regression equation to the slopes and total rated input powers for product classes [19] 7, 8, 9, 49, and 50. Using this relationship, DOE extrapolated and interpolated slopes for product classes product

[19] Product classes are identified by numbers in Table III.1.

classes 39, 40, 43 through 46, 53, 54, and 65 through 70. DOE estimated the slopes based on total rated lamp power for these product classes because there was insufficient correlation in the test data to establish a slope. DOE invites comment on its scaling technique for number of lamps operated by a ballast, starting method, ballast factor, and total rated lamp power.

Table III.2 lists the slope of the line developed by DOE for converting measured BE to BEF. Using the equation BEF = slope * BE, measured BE is converted to BEF.

Table III.2 Transfer Equation Slopes

Ballast and Lamp Type	Starting Method*	Ballast Factor	Number of Lamps					
			One	Two	Three	Four	Five	Six
Four-Foot MBP, and Two-Foot U-Shaped	IS and RS (not PS)	High	3.233	1.624	1.081	0.812	0.650	0.542
		Normal	3.378	1.697	1.129	0.849	0.679	0.566
		Low	3.430	1.723	1.147	0.862	0.690	0.575
	PS	High	3.204	1.610	1.071	0.808	0.644	0.537
		Normal	3.348	1.682	1.119	0.844	0.673	0.561
		Low	3.400	1.708	1.137	0.857	0.684	0.570
Four-Foot T5 MiniBP SO	All	High	2.910	1.584	---	---	---	---
		Normal	3.041	1.655	---	---	---	---
		Low	3.088	1.680	---	---	---	---
Four-Foot T5 MiniBP HO	All	All	1.703	0.927	0.649	0.504	---	---
Eight-Foot SP Slimline	All	High	1.653	0.841	---	---	---	---
		Normal	1.727	0.878	---	---	---	---
		Low	1.754	0.892	---	---	---	---
Eight-Foot RDC HO	IS and RS (not PS)	All	1.128	0.614	---	---	---	---
	PS	All	1.138	0.619	---	---	---	---
Residential Ballast, Four-Foot MBP, and Two-Foot U-Shaped	IS and RS (not PS)	All	3.357	1.686	1.122	0.853	---	---
	PS	All	3.328	1.671	1.113	0.846	---	---
Sign Ballast	All	All	0.888	0.483	0.338	0.263	0.216	0.184

Gray shading indicates the slope is based on test data directly. Gray shading with diagonal lines indicates the slope is based on a relationship between total rated lamp power and slope. All other product classes (not shaded) have slopes based on scaling relationships. DOE tested ballasts for BE and BEF in underlined product classes.
*IS = Instant-start; RS = Rapid-start; PS = Programmed-start

7. Resistor Value Determination

The resistor-based BE method requires a resistive load bank to be used in place of a lamp during ballast operation. Therefore, DOE determined [20] the resistive value corresponding to different lamp types operating at conditions described in ANSI C78.81–2005.[21] In some cases, the resistor value was calculated from data published in ANSI C78.81–2005. ANSI C78.81–2005 provides electrical characteristics of lamps under either high-frequency or low-frequency operation. For T8 and T12 lamps, ANSI C78.81–2005 provides electrical characteristics for low-frequency operation, and for T5 lamps, the standard provides characteristics for high-frequency operation. Since electronic ballasts operate in high-frequency, DOE needed to empirically determine high-frequency resistances for testing electronic ballasts that operate T8 and T12 lamps. Since all T5 ballasts currently offered in the market are electronic, DOE did not need to empirically determine resistor values for low-frequency operation. DOE determined one resistor value per lamp and did not modify the resistance based

[20] DOE determined the simulated lamp arc resistor value at BF = 0.88 for 4-foot 32 W MBP T8 ballasts because 0.88 was used in the NEMA round robin and is the most common BF for this ballast type.

[21] American National Standards for Electric Lamps, Double-Capped Fluorescent Lamps—Dimensional and Electrical Characteristics," approved August 11, 2005.

on each individual different ballast factors as discussed in section III.F.5. Table III.3 lists the resistor values determined empirically and those specified by ANSI C78.81–2005.

TABLE III.3—SIMULATED LAMP RESISTOR VALUES

Ballast type	Nominal lamp wattage	Lamp diameter and base	Low-frequency operation resistance (ohms)		High-frequency operation resistance (ohms)	
			Electrode ($R_{1/2E}$)	Lamp Arc (R_{arc})	Electrode ($R_{1/2E}$)	Lamp Arc (R_{arc})
Ballasts that operate one, two, three, four, five, or six straight-shaped lamps (commonly referred to as 4-foot medium bipin lamps) with medium bipin bases, a nominal overall length of 48 inches, a rated wattage of 25 W or more, and an input voltage at or between 120 V and 277 V.	32 34	T8 MBP ..... T12 MBP	5.75 4.8	439 151	5.75 4.8	760 204
Ballasts that operate one, two, three, four, five, or six U-shaped lamps (commonly referred to as 2-foot U-shaped lamps) with medium bipin bases, a nominal overall length between 22 and 25 inches, a rated wattage of 25 W or more, and an input voltage at or between 120 V and 277 V.	32 34	T8 MBP ..... T12 MBP	5.75 4.8	439 151	5.75 4.8	760 204
Ballasts that operate one or two rapid-start lamps (commonly referred to as 8-foot high output lamps) with recessed double contact bases, a nominal overall length of 96 inches and an input voltage at or between 120 V and 277 V.	86 95	T8 HO RDC T12 HO RDC	N/A 1.6	N/A 131	4.75 1.6	538 204
Ballasts that operate one or two instant-start lamps (commonly referred to as 8-foot slimline lamps) with single pin bases, a nominal overall length of 96 inches, a rated wattage of 52 W or more, and an input voltage at or between 120 V and 277 V.	59 60	T8 ..... slimline SP .. T12 ..... slimline SP ..	N/A* N/A*	876 313	N/A* N/A*	1256 431
Ballasts that operate one or two straight-shaped lamps (commonly referred to as 4-foot miniature bipin standard output lamps) with miniature bipin bases, a nominal length between 45 and 48 inches, a rated wattage of 26 W or more, and an input voltage at or between 120 V and 277 V.	28	T5 Mini-BP ..	N/A	N/A	20	950
Ballasts that operate one, two, three, or four straight-shaped lamps (commonly referred to as 4-foot miniature bipin high output lamps) with miniature bipin bases, a nominal length between 45 and 48 inches, a rated wattage of 49 W or more, and an input voltage at or between 120 V and 277 V.	54	T5 Mini-BP ..	N/A	N/A	4	255
Ballasts that operate one, two, three, or four straight-shaped lamps (commonly referred to as 4-foot medium bipin lamps) with medium bipin bases, a nominal overall length of 48 inches, a rated wattage of 25 W or more, an input voltage at or between 120 V and 277 V, a power factor of less than 0.90, and that are designed and labeled for use in residential applications.	32 34	T8 MBP ..... T12 MBP	5.75 4.8	439 151	5.75 4.8	760 204
Ballasts that operate one, two, three, four, five, or six rapid-start lamps (commonly referred to as 8-foot high output lamps) with recessed double contact bases, a nominal overall length of 96 inches, an input voltage at or between 120 V and 277 V, and that operate at ambient temperatures of 20 °F or less and are used in outdoor signs.	86 110	T8 HO RDC T12 HO RDC	N/A 1.6	N/A 166	4.75 1.6	538 275

MBP, Mini-BP, RDC, and SP represent medium bipin, miniature bipin, recessed double contact, and single pin, respectively.
* The resistor load bank representing 8-foot slimline single pin (SP) lamps does not have electrode resistors.

ANSI C78.81–2005 specifies the electrode resistance a lamp manufacturer must achieve through design and manufacturing. Electrode resistance is assumed to be the same for low-frequency and high-frequency operation because a tungsten filament (lamp electrode) has high impedance at both frequencies. For the lamp arc, the ANSI standard provides electrical characteristics for either high or low frequency, depending on the lamp type. By dividing lamp arc wattage by the square of lamp current, DOE calculated the resistance of the lamp arc resistor.

Where lamp specification sheets do not specify electrical characteristics for the desired frequency of operation, DOE determined resistor values empirically. DOE empirically determined resistor values for high-frequency operation of 32 W F32T8, 60 W F96T12/ES, 95 W F96T12HO/ES, and 110 W F96T12HO lamps. To determine the resistor values empirically, DOE first measured the light output of a reference lamp operated by a reference ballast at low frequency. Next, DOE connected the same reference lamp to a reference ballast operating at high frequency. By adjusting the voltage and current provided to the lamp, DOE achieved the same light output for high-frequency operation as measured in low-frequency operation. Then, DOE calculated the apparent resistance of the lamp under high-frequency operation using measured current and voltage.

DOE notes that the measurement of lamp arc power is slightly different than actual lamp arc power due to the empirical method of determining the resistor value. DOE calculated the lamp arc resistor using measured lamp voltage and current at a predetermined

light output. Part of this voltage is applied across the lamp electrodes, so the calculated lamp arc resistor value tends to be slightly larger than reality. DOE believes the increase in calculated lamp arc resistance due to voltage drop in the electrodes to be minimal in comparison to the true lamp arc resistance. Because DOE cannot measure lamp electrode resistance independently of the lamp arc, DOE was unable to account for this problem. Design of the fluorescent lamp prevents DOE from making this measurement. In addition, DOE does not identify the resistance for a discrete electrode resistor for ballasts that operate eight-foot slimline SP lamps because DOE could not determine this value empirically and ANSI C78.81–2005 does not list the resistance. In effect, the empirical resistor value determination method includes the resistance of the electrodes in the resistance of the lamp arc resistor. Because the SP lamps only have one pin, the electrodes and lamp arc are all connected in series. When DOE measured the resistance for the "lamp arc resistor," DOE was unable to separate the resistance of the electrodes from the lamp arc due to design of a fluorescent lamp. While it was necessary to use electrode resistors in medium bipin, miniature-bipin, and recessed double contact lamps to allow for an electrode heating circuit, single-pin lamps do not have this functionality and are only designed for use with instant-start ballasts. Therefore, the lamp arc resistor for single-pin lamps includes the effective resistance of the entire lamp in a single resistor.

In addition, today's proposed high-frequency lamp arc resistor values for ballasts that operate one, two, three, four, five, or six straight-shaped and U-shaped lamps with medium bipin bases, a nominal overall length of 48 inches, a rated wattage of 25 W or more, and an input voltage at or between 120 V and 277 V are based on a ballast factor of 0.88. This value resulted from DOE's participation in the NEMA round robin testing for the development of the resistor-based BE method. DOE selected a resistor for four-foot MBP ballasts that represented a 0.88 ballast factor, which is the most common ballast factor for this ballast type. For other ballast types, DOE used the electrical characteristics in ANSI C78.81–2005 to develop high-frequency lamp arc resistor values. These characteristics correspond to a ballast factor of 1.0. DOE does not believe that the quality of the test procedure is affected by the use of a different ballast factor for the 4-foot T8 MBP ballasts. DOE invites comment on this issue.

8. Non-Operational Ballasts When Connected to a Resistor

During the testing process, DOE targeted certain product classes spanning ranges of ballast factor, starting method, lamp type, and number of lamps for extensive testing of both BEF and BE. *See* section III.F.6 for additional detail on the specific product classes chosen for testing. DOE selected several ballasts, ranging from one to approximately fifteen, within each chosen product class and tested three samples of each ballast. As part of its testing process for developing transfer equations between BEF and BE, DOE identified seven different ballast models that did not operate the resistor load bank. Therefore, DOE was therefore unable to calculate these ballasts' BE. These ballasts were from different product classes and different manufacturers. In some cases, all three examples of a particular ballast did not operate a resistor, while in the other cases only one or two ballast examples did not operate a resistor. DOE also confirmed that the ballasts did operate properly when connected to fluorescent lamps. DOE does not know specifically why some ballasts do not operate resistor load banks. It appears these ballasts sensed the load was not a real fluorescent lamp and turned off. For ballasts found to not operate resistors, DOE proposes that manufacturers use the existing BEF test procedure found in appendix Q. In addition, DOE is considering an alternative proposal in which it would include improvements to the light-output-based test procedure in the procedure for ballasts that do not operate resistors. DOE believes this would improve the precision of the BEF measurements for ballasts that do not operate resistors. The improved light-output-based test procedure could be outlined as a separate section in Appendix Q1 only for use with ballasts that do not operate resistors. DOE invites comment on why some ballasts do not operate when connected to a resistor load bank.

9. Existing Test Procedure Update

As discussed in III.E.2, DOE proposes to update the reference in the existing test procedure (appendix Q) from ANSI C82.2–1984 to ANSI C82.2–2002, and to specify that where ANSI C82.2–2002 references ANSI C82.1–1997, the operator shall use ANSI C82.1–2004 for testing low-frequency ballasts and shall use ANSI C82.11–2002 for high-frequency ballasts. These changes to the existing test procedure to modernize the ANSI reference would be effective 30 days following publication of the test procedure final rule. DOE does not believe the updated standard will impose increased testing burden, nor will it alter the measured BEF of fluorescent lamp ballasts. Because the active mode and standby mode test procedures now both reference ANSI C82.2–2002, DOE proposes to both update the reference and reorganize the test procedure outlined in appendix Q for clarity.

10. References to ANSI C82.2–2002

As stated, in this NOPR DOE is proposing amendments to the fluorescent lamp ballast test procedure that would incorporate references to ANSI C82.2–2002 into appendix Q and appendix Q1. In examining the ANSI standard, DOE found that within ANSI C82.2–2002 there are references other ANSI standards. In particular, section 2 of ANSI C82.2–2002 states that "when American National Standards referred to in this document [ANSI C82.2–2002] are superseded by a revision approved by the American National Standards Institute, Inc. the revision shall apply." Revisions to these normative standards could potentially impact compliance with energy conservation standards by changing the tested value for energy efficiency. Therefore, DOE proposes to specify the particular versions of the ANSI standards that would be used in conjunction with ANSI C82.2–2002. DOE proposes to use ANSI C78.81–2005, ANSI C78.901–2005, ANSI C82.1–2004, ANSI C82.11–2002, and ANSI C82.13–2002 in support of ANSI C82.2–2002. All other normative references would be as directly specified in ANSI C82.2–2002. These specifications would apply to the ANSI C82.2–2002 references in Appendix Q and to the ANSI C82.2–2002 references in Appendix Q1. DOE conducted testing in development of today's proposed test procedure for Appendix Q1 in accordance with the aforementioned industry references.

G. Burden To Conduct the Proposed Test Procedure

EPCA requires that "[a]ny test procedures prescribed or amended under this section shall be reasonably designed to produce test results which measure energy efficiency, energy use * * * or estimated annual operating cost of a covered product during a representative average use cycle or period of use * * * and shall not be unduly burdensome to conduct." (42 U.S.C. 6293(b)(3)). Today's proposed test procedure seeks to calculate the efficiency of a ballast by computing the

ratio of ballast output power (simulated lamp arc power) to ballast input power. This ratio is then converted to ballast efficacy factor, the statutorily required efficiency metric. DOE believes its proposed method minimizes burden on manufacturers while still achieving an effective test procedure.

DOE sought to reduce manufacturer burden wherever possible. As described in section III.F.2, DOE chose to test each ballast type using only one resistor load bank instead of using a different load for each ballast factor and number of lamps associated with a ballast. DOE believes this choice reduces burden on the manufacturer. In addition, the proposed test procedure requires no additional measurement instrumentation beyond what ballast manufacturers use for the existing test procedure and other general uses. The required measurement of ballast factor is no different than the procedure manufacturers already use for reporting BF in their literature. The use of resistors for measuring ballast input power and lamp arc power, however, does impose a small incremental burden compared to the existing test procedure. DOE estimates the initial purchase cost of resistors for a two-lamp ballast to be about $1000 to $2000 and does not believe this additional materials burden is unreasonable due to the low cost and the fact that the materials cost can be amortized over the span of many years because the resistors maintain integrity over a long lifespan. The test procedure imposes a minimal incremental labor burden of about 30 to 60 minutes for a two-lamp ballast over the existing test procedure to measure BE using the ballast-resistor setup. For these reasons, even for small ballast manufacturers, DOE believes the testing burden is not unduly burdensome. DOE invites comment on this issue.

H. Impact on Measured Energy Efficiency

In any rulemaking to amend a test procedure, DOE must determine "to what extent, if any, the proposed test procedure would alter the measured energy efficiency * * * of any covered product as determined under the existing test procedure." (42 U.S.C. 6293(e)(1)) If DOE determines that the amended test procedure would alter the measured efficiency of a covered product, DOE must amend the applicable energy conservation standard accordingly. (42 U.S.C. 6293(e)(2)) This proposed active mode test procedure does impact the reported BEF value. Some products will test with higher or lower efficiency based on the new test procedure because of the transfer equation between the measured parameters and the reported BEF value. DOE is currently amending energy conservation standards for fluorescent lamp ballasts in the fluorescent lamp ballast standards rulemaking. In that rulemaking, DOE will consider standards based on the measured efficiency of the ballast in accordance with the test procedure proposed in this active mode test procedure rulemaking consistent with 42 U.S.C. 6293(e)(2). DOE will use test data that it collects in the course of both this test procedure rulemaking and the fluorescent lamp ballast standards rulemaking when setting energy conservation standards for fluorescent lamp ballasts.

I. Certification and Enforcement

Ballast manufacturers are currently not required to submit compliance statements and certification reports. In this rulemaking, DOE proposes to require fluorescent lamp ballast manufacturers to follow the certification and enforcement requirements summarized in subpart F of 10 CFR part 430.

DOE regulations at 10 CFR 430.62(a)(4) describe the format and content of a certification report for consumer products. DOE proposes to include fluorescent lamp ballasts in the list of products for which certification reports are required (along with specific energy consumption metrics). The revised submission of data section will indicate that ballast manufacturers should report ballast efficacy factor and power factor in certification reports. The definition of "basic model" can be found at 10 CFR 430.2; the fluorescent lamp ballast test procedure can be found in 10 CFR part 430, subpart B, Appendix Q, and the sampling plan can be found at 10 CFR 430.24(q). Manufacturers would be required to follow all other provisions of subpart F of 10 CFR part 430 for certification and enforcement applicable to all covered ballasts.

DOE proposes that certification statements and compliance reports be submitted in accordance with the existing energy conservation standards one year after publication of this rulemaking (publication approximately June 30, 2011). In addition, DOE proposes that certification statements and compliance reports be submitted in accordance with the revised energy conservation standards and possible expansion of scope of coverage one year after these standards become effective (effective date of standards approximately June 30, 2014).

IV. Procedural Issues and Regulatory Review

A. Executive Order 12866

Today's proposed rule has been determined to not be a "significant regulatory action" under Executive Order 12866, "Regulatory Planning and Review," 58 FR 51735 (Oct. 4, 1993). Accordingly, this action was not subject to review under that Executive Order by the Office of Information and Regulatory Affairs (OIRA) of the Office of Management and Budget (OMB).

B. National Environmental Policy Act

In this proposed rule, DOE proposes test procedure amendments that it expects will be used to develop and implement future energy conservation standards for ballasts. DOE has determined that this rule falls into a class of actions that are categorically excluded from review under the National Environmental Policy Act of 1969 (42 U.S.C. 4321 *et seq.*) and DOE's implementing regulations at 10 CFR part 1021. Specifically, this proposed rule would amend the existing test procedures without affecting the amount, quality or distribution of energy usage, and, therefore, would not result in any environmental impacts. Thus, this rulemaking is covered by Categorical Exclusion A5 under 10 CFR part 1021, subpart D, which applies to any rulemaking that interprets or amends an existing rule without changing the environmental effect of that rule. Accordingly, neither an environmental assessment nor an environmental impact statement is required.

C. Regulatory Flexibility Act

The Regulatory Flexibility Act (5 U.S.C. 601 *et seq.*) requires preparation of an initial regulatory flexibility analysis for any rule that by law must be proposed for public comment, unless the agency certifies that the rule, if promulgated, will not have a significant economic impact on a substantial number of small entities. As required by Executive Order 13272, "Proper Consideration of Small Entities in Agency Rulemaking," 67 FR 53461 (August 16, 2002), DOE published procedures and policies on February 19, 2003, to ensure that the potential impacts of its rules on small entities are properly considered during the DOE rulemaking process. 68 FR 7990. DOE has made its procedures and policies available on the Office of the General Counsel's Web site: *http://www.gc.doe.gov.*

The Small Business Administration (SBA) has set size thresholds for

manufacturers of fluorescent lamp ballasts that define those entities classified as "small businesses" for the purposes of the RFA. DOE used the SBA's small business size standards to determine whether any small manufacturers of fluorescent lamp ballasts would be subject to the requirements of the rule. 65 FR 30836, 30850 (May 15, 2000), as amended at 65 FR 53533, 53545 (September 5, 2000) and codified at 13 CFR part 121. The size standards are listed by North American Industry Classification System (NAICS) code and industry description and are available at *http://www.sba.gov/idc/groups/public/documents/sba_homepage/serv_sstd_tablepdf.pdf.* Fluorescent lamp ballast manufacturing is classified under NAICS 335311, *Power, Distribution, & Specialty Transformer Manufacturing.* The SBA sets a threshold of 750 employees or less for an entity to be considered as a small business for this category.

To better assess the potential impacts of the proposed standards for fluorescent lamp ballasts on small entities, DOE conducted a more focused inquiry of the companies that could be small manufacturers of fluorescent lamp ballasts. During its market survey, DOE used all available public information to identify potential small manufacturers. DOE's research involved several industry trade association membership directories, product databases, individual company Web sites, and marketing research tools (*e.g.,* Dunn and Bradstreet reports) to create a list of every company that manufactures or sells fluorescent lamp ballasts covered by this rulemaking. DOE reviewed all publicly-available data and contacted select companies on its list, as necessary, to determine whether they met the SBA's definition of a small business manufacturer of covered fluorescent lamp ballasts. DOE screened out companies that did not offer fluorescent lamp ballasts covered by this rulemaking, did not meet the definition of a "small business," or are foreign owned and operated. Ultimately, DOE identified approximately 15 fluorescent lamp ballast manufacturers that produce covered fluorescent lamp ballasts and can potentially be considered small businesses.

The proposed rule includes revisions to appendix Q and appendix Q1, as well as certification reporting requirements. The revisions to appendix Q update an industry reference and do not change the test method or increase testing burden. The only difference between the two test procedures relates to the interference of testing instrumentation. Specifically, the input power measurement of ANSI C82.2–2002 reduces the interference of instrumentation on the input power measurement as compared to ANSI C82.2–1984. The vast majority of companies and testing facilities, however, already employ modern instrumentation that does not significantly interfere with input power measurements. Thus, updating this industry reference would not impose additional financial burden in terms of labor or materials. The proposed test procedure in appendix Q1 imposes a minimal incremental burden compared to the existing test procedure and industry practices. For a 2-lamp ballast, the new procedure requires a small increase in the labor burden of 30 to 60 minutes and a relatively small increase in materials costs ($1000 to $2000 initial purchase price). Finally, DOE estimates that the proposed certification reporting requirements would average 30 hours per response.

To analyze the testing burden impacts described above on small business manufacturers, DOE identified small business manufacturers of fluorescent lamp ballasts included in the preliminary scope of coverage considered in the fluorescent lamp ballast standards rulemaking as described above. DOE sought to examine publically available financial data for these companies to compare revenue and profit to the anticipated testing burden associated with this proposed test procedure. DOE determined that all the identified small business manufacturers were privately owned, and as a result, financial data was not publically available. Instead, DOE estimated testing burden for a small business with 0.1 percent market share of covered fluorescent lamp ballasts and revenue of approximately one million dollars. DOE assumed that this small manufacturer would sell approximately 30 basic models of a single ballast type. Based on the assumptions stated in the previous paragraphs, DOE estimated that the annual testing costs for this small business would be about $10,000, constituting 1 percent of annual revenue. Including the 30 hours per response for certification reporting, DOE believes this to be a small percentage of revenue and not a significant impact.

On the basis of the foregoing, DOE tentatively concludes and certifies that this proposed rule would not have a significant impact on a substantial number of small entities. Accordingly, DOE has not prepared a regulatory flexibility analysis for this rulemaking. DOE will provide its certification and supporting statement of factual basis to the Chief Counsel for Advocacy of the Small Business Administration for review under 5 U.S.C. 605(b).

D. Paperwork Reduction Act

This rule contains a collection-of-information requirement subject to the Paperwork Reduction Act (PRA) which has been approved by OMB under control number 1910–1400. Public reporting burden for compliance reporting for energy and water conservation standards is estimated to average 30 hours per response, including the time for reviewing instructions, searching existing data sources, gathering and maintaining the data needed, and completing and reviewing the collection of information. Send comments regarding this burden estimate, or any other aspect of this data collection, including suggestions for reducing the burden, to DOE (*see* **ADDRESSES**) and by e-mail to *Christine_J._Kymn@omb.eop.gov.*

Notwithstanding any other provision of the law, no person is required to respond to, nor shall any person be subject to a penalty for failure to comply with, a collection of information subject to the requirements of the PRA, unless that collection of information displays a currently valid OMB Control Number.

E. Unfunded Mandates Reform Act of 1995

Title II of the Unfunded Mandates Reform Act of 1995 (UMRA) (Pub. L. 104–4) requires each Federal agency to assess the effects of Federal regulatory actions on State, local, and Tribal governments and the private sector. For proposed regulatory actions likely to result in a rule that may cause expenditures by State, local, and Tribal governments, in the aggregate, or by the private sector of $100 million or more in any one year (adjusted annually for inflation), section 202 of UMRA requires a Federal agency to publish estimates of the resulting costs, benefits, and other effects on the national economy. (2 U.S.C. 1532(a), (b)) UMRA also requires Federal agencies to develop an effective process to permit timely input by elected officers of State, local, and Tribal governments on a proposed "significant intergovernmental mandate." In addition, UMRA requires an agency plan for giving notice and opportunity for timely input to small governments that may be affected before establishing a requirement that might significantly or uniquely affect them. On March 18, 1997, DOE published a statement of policy on its process for intergovernmental consultation under UMRA. 62 FR 12820. (This policy is

also available at *http://www.gc.doe.gov*). Today's proposed rule contains neither an intergovernmental mandate, nor a mandate that may result in the expenditure of $100 million or more in any year, so these requirements do not apply.

F. Treasury and General Government Appropriations Act, 1999

Section 654 of the Treasury and General Government Appropriations Act, 1999 (Pub. L. 105–277) requires Federal agencies to issue a Family Policymaking Assessment for any proposed rule that may affect family well-being. Today's proposed rule would not have any impact on the autonomy or integrity of the family as an institution. Accordingly, DOE has concluded that it is unnecessary to prepare a Family Policymaking Assessment.

G. Executive Order 13132

Executive Order 13132, "Federalism," 64 FR 43255 (August 4, 1999) imposes certain requirements on agencies formulating and implementing policies or regulations that preempt State law or that have Federalism implications. The Executive Order requires agencies to examine the constitutional and statutory authority supporting any action that would limit the policymaking discretion of the States and to carefully assess the necessity for such actions. The Executive Order also requires agencies to have an accountable process to ensure meaningful and timely input by State and local officials in the development of regulatory policies that have Federalism implications. On March 14, 2000, DOE published a statement of policy describing the intergovernmental consultation process it will follow in the development of such regulations. 65 FR 13735. DOE has examined this proposed rule and has determined that it would not have a substantial direct effect on the States, on the relationship between the national government and the States, or on the distribution of power and responsibilities among the various levels of government. EPCA governs and prescribes Federal preemption of State regulations as to energy conservation for the products that are the subject of today's proposed rule. States can petition DOE for exemption from such preemption to the extent, and based on criteria, set forth in EPCA. (42 U.S.C. 6297(d)) No further action is required by Executive Order 13132.

H. Executive Order 12988

With respect to the review of existing regulations and the promulgation of new regulations, section 3(a) of Executive Order 12988, "Civil Justice Reform," 61 FR 4729 (Feb. 7, 1996), imposes on Federal agencies the general duty to adhere to the following requirements: (1) Eliminate drafting errors and ambiguity; (2) write regulations to minimize litigation; (3) provide a clear legal standard for affected conduct rather than a general standard; and (4) promote simplification and burden reduction. Section 3(b) of Executive Order 12988 specifically requires that Executive agencies make every reasonable effort to ensure that the regulation: (1) Clearly specifies the preemptive effect, if any; (2) clearly specifies any effect on existing Federal law or regulation; (3) provides a clear legal standard for affected conduct while promoting simplification and burden reduction; (4) specifies the retroactive effect, if any; (5) adequately defines key terms; and (6) addresses other important issues affecting clarity and general draftsmanship under any guidelines issued by the Attorney General. Section 3(c) of Executive Order 12988 requires Executive agencies to review regulations in light of applicable standards in sections 3(a) and 3(b) to determine whether they are met or it is unreasonable to meet one or more of them. DOE has completed the required review and determined that, to the extent permitted by law, the proposed rule meets the relevant standards of Executive Order 12988.

I. Treasury and General Government Appropriations Act, 2001

Section 515 of the Treasury and General Government Appropriations Act, 2001 (Pub. L. 106–554; 44 U.S.C. 3516 note) provides for agencies to review most disseminations of information to the public under guidelines established by each agency pursuant to general guidelines issued by OMB. OMB's guidelines were published at 67 FR 8452 (Feb. 22, 2002), and DOE's guidelines were published at 67 FR 62446 (Oct. 7, 2002). DOE has reviewed today's proposed rule under the OMB and DOE guidelines and has concluded that it is consistent with applicable policies in those guidelines.

J. Executive Order 13211

Executive Order 13211, "Actions Concerning Regulations That Significantly Affect Energy Supply, Distribution, or Use," 66 FR 28355 (May 22, 2001), requires Federal agencies to prepare and submit to OMB, a Statement of Energy Effects for any proposed significant energy action. A "significant energy action" is defined as any action by an agency that promulgated or is expected to lead to promulgation of a final rule, and that: (1) Is a significant regulatory action under Executive Order 12866, or any successor order; and (2) is likely to have a significant adverse effect on the supply, distribution, or use of energy; or (3) is designated by the Administrator of OIRA as a significant energy action. For any proposed significant energy action, the agency must give a detailed statement of any adverse effects on energy supply, distribution, or use should the proposal be implemented, and of reasonable alternatives to the action and their expected benefits on energy supply, distribution, and use. Today's regulatory action to amend the test procedure for measuring the energy efficiency of fluorescent lamp ballasts is not a significant regulatory action under Executive Order 12866. Moreover, it would not have a significant adverse effect on the supply, distribution, or use of energy, nor has it been designated as a significant energy action by the Administrator of OIRA. Therefore, it is not a significant energy action, and, accordingly, DOE has not prepared a Statement of Energy Effects.

K. Executive Order 12630

Pursuant to Executive Order 12630, "Governmental Actions and Interference with Constitutionally Protected Property Rights," 53 FR 8859 (March 15, 1988), DOE has determined that this rule would not result in any takings that might require compensation under the Fifth Amendment to the United States Constitution.

L. Section 32 of the Federal Energy Administration Act of 1974

Under section 301 of the Department of Energy Organization Act (Pub. L. 95–91; 42 U.S.C. 7101), DOE must comply with section 32 of the Federal Energy Administration Act of 1974, as amended by the Federal Energy Administration Authorization Act of 1977. (15 U.S.C. 788; FEAA) Section 32 essentially provides in relevant part that, where a proposed rule authorizes or requires use of commercial standards, the notice of proposed rulemaking must inform the public of the use and background of such standards. In addition, section 32(c) requires DOE to consult with the Attorney General and the Chairman of the Federal Trade Commission (FTC) concerning the impact of the commercial or industry standards on competition. The proposed rule incorporates testing methods contained in the following commercial standards: ANSI C82.2–2002, Method of Measurement of Fluorescent Lamp Ballasts. While today's proposed test

procedure is not exclusively based on ANSI C82.2–2002, one component of the test procedure, namely measurement of ballast factor, adopts a measurement technique from ANSI C82.2–2002 without amendment. The Department has evaluated these standards and is unable to conclude whether they fully comply with the requirements of section 32(b) of the FEAA, (*i.e.,* that they were developed in a manner that fully provides for public participation, comment, and review). DOE will consult with the Attorney General and the Chairman of the FTC concerning the impact of these test procedures on competition, prior to prescribing a final rule.

V. Public Participation

A. Attendance at Public Meeting

The time, date and location of the public meeting are listed in the **DATES** and **ADDRESSES** sections at the beginning of this NOPR. To attend the public meeting, please notify Ms. Brenda Edwards at (202) 586–2945. As explained in the **ADDRESSES** section, foreign nationals visiting DOE headquarters are subject to advance security screening procedures.

B. Procedure for Submitting Requests To Speak

Any person who has an interest in the topics addressed in this notice, or who is a representative of a group or class of persons that has an interest in these issues, may request an opportunity to make an oral presentation at the public meeting. Such persons may hand-deliver requests to speak to the address shown in the **ADDRESSES** section at the beginning of this notice between 9 a.m. and 4 p.m., Monday through Friday, except Federal holidays. Requests may also be sent by mail or e-mail to: Ms. Brenda Edwards, U.S. Department of Energy, Building Technologies Program, Mailstop EE–2J, 1000 Independence Avenue, SW., Washington, DC 20585–0121, or *Brenda.Edwards@ee.doe.gov.* Persons who wish to speak should include in their request a computer diskette or CD in WordPerfect, Microsoft Word, PDF, or text (ASCII) file format that briefly describes the nature of their interest in this rulemaking and the topics they wish to discuss. Such persons should also provide a daytime telephone number where they can be reached.

DOE requests that those persons who are scheduled to speak submit a copy of their statements at least one week prior to the public meeting. DOE may permit any person who cannot supply an advance copy of this statement to participate, if that person has made alternative arrangements with the Building Technologies Program in advance. When necessary, the request to give an oral presentation should ask for such alternative arrangements.

C. Conduct of Public Meeting

DOE will designate a DOE official to preside at the public meeting and may also employ a professional facilitator to aid discussion. The public meeting will be conducted in an informal, conference style. The meeting will not be a judicial or evidentiary public hearing, but DOE will conduct it in accordance with section 336 of EPCA (42 U.S.C. 6306). There shall not be discussion of proprietary information, costs or prices, market share, or other commercial matters regulated by U.S. anti-trust laws.

DOE reserves the right to schedule the order of presentations and to establish the procedures governing the conduct of the public meeting. A court reporter will record the proceedings and prepare a transcript.

At the public meeting, DOE will present summaries of comments received before the public meeting, allow time for presentations by participants, and encourage all interested parties to share their views on issues affecting this rulemaking. Each participant may present a prepared general statement (within time limits determined by DOE) before the discussion of specific topics. Other participants may comment briefly on any general statements. At the end of the prepared statements on each specific topic, participants may clarify their statements briefly and comment on statements made by others. Participants should be prepared to answer questions from DOE and other participants. DOE representatives may also ask questions about other matters relevant to this rulemaking. The official conducting the public meeting will accept additional comments or questions from those attending, as time permits. The presiding official will announce any further procedural rules or modification of procedures needed for the proper conduct of the public meeting.

DOE will make the entire record of this proposed rulemaking, including the transcript from the public meeting, available for inspection at the U.S. Department of Energy, 6th Floor, 950 L'Enfant Plaza, SW., Washington, DC 20024, (202) 586–2945, between 9 a.m. and 4 p.m., Monday through Friday, except Federal holidays. The official transcript will also be posted on the Web page at *http://www1.eere.energy.gov/buildings/appliance_standards/residential/fluorescent_lamp_ballasts.html.*

D. Submission of Comments

DOE will accept comments, data, and information regarding the proposed rule no later than the date provided at the beginning of this notice. Comments, data, and information submitted to DOE's e-mail address for this rulemaking should be provided in WordPerfect, Microsoft Word, PDF, or text (ASCII) file format. Stakeholders should avoid the use of special characters or any form of encryption, and wherever possible, comments should include the electronic signature of the author. Comments, data, and information submitted to DOE via mail or hand delivery/courier should include one signed paper original. No telefacsimiles (faxes) will be accepted.

According to 10 CFR 1004.11, any person submitting information that he or she believes to be confidential and exempt by law from public disclosure should submit two copies: one copy of the document including all the information believed to be confidential, and one copy of the document with the information believed to be confidential deleted. DOE will make its own determination as to the confidential status of the information and treat it according to its determination.

Factors of interest to DOE when evaluating requests to treat submitted information as confidential include: (1) A description of the items; (2) whether and why such items are customarily treated as confidential within the industry; (3) whether the information is generally known by or available from other sources; (4) whether the information has previously been made available to others without obligation concerning its confidentiality; (5) an explanation of the competitive injury to the submitting person which would result from public disclosure; (6) a date upon which such information might lose its confidential nature due to the passage of time; and (7) why disclosure of the information would be contrary to the public interest.

E. Issues on Which DOE Seeks Comment

Although comments are welcome on all aspects of this rulemaking, DOE is particularly interested in receiving comments and views of interested parties concerning the following issues:

1. All Aspects of the Existing Test Procedure for Active Mode Energy Consumption

DOE invites comment on all aspects of the existing test procedure for fluorescent lamp ballasts for active

mode energy consumption that appear at 10 CFR part 430, subpart B, appendix Q ("Uniform Test Method for Measuring the Energy Consumption of Fluorescent Lamp Ballasts").

2. Appropriate Usage of ANSI Standards

DOE seeks comment on the appropriate use of ANSI C82.2–2002, ANSI C82.11 Consolidated-2002, and ANSI C82.1–2004. *See* section III.E.3 for further detail.

3. Method of Measurement for Dimming Ballasts

DOE seeks comment on potential methods of measurement to determine the efficiency of dimming ballasts if DOE decides to include them in the scope of energy conservation standards. *See* section III.F.2 for further detail.

4. Resistor-Based Ballast Efficiency Test Method

DOE seeks comment on the effectiveness of the proposed resistor-based BE test method and its expected improvement in measurement variation. *See* section III.E.1 for further details.

5. Alternative Approaches To Amending the Test Procedure

DOE seeks comment from interested parties who do not support the proposed resistor-based ballast efficiency method on the lamp-based BE method and the light-output-based and RSE test procedures (*see* sections III.E.2, III.E.3, and III.E.4 for further detail), or any other procedure they believe is appropriate.

6. Ballasts That Do Not Operate Resistors

DOE seeks comment on why some ballasts do not operate when connected to a resistor load bank and DOE's proposal to measure BEF directly (as a light output measurement) for these ballasts. DOE invites comment on other approaches to test these ballasts. *See* section III.F.8 for further detail.

7. Ballast Factor Variation Due to Variations in Measured Lamp Power

DOE recognizes that in order to correlate measured BE to BEF using DOE's proposed test procedure, the BF of the test ballast must be determined. DOE seeks comment on DOE's approach to use light output-based measurement to determine ballast factor and the resulting variation in ballast factor due to lamp manufacturing variations. DOE also requests comment on impact of this variation in BF on the calculated BEF (according to the proposed test procedure). *See* section III.F.3 for further detail.

8. Ballast Factor Binning

DOE seeks comment on the effect of DOE's approach of using a single resistor value for measuring ballasts of all ballast factors (for a particular ballast) and correlating measured BE to correlated BEF using transfer equations specific to ballast factor bins. *See* section III.F.5 for further detail.

9. Transfer Equations

DOE seeks comment on the transfer equations developed to convert BE to BEF. *See* section III.F.5 for further detail.

10. Scaling Transfer Equations

DOE seeks comment on the transfer equation scaling techniques (across number of lamps operated by a ballast, starting method, ballast factor, and total rated lamp power) used for product classes in which there was insufficient correlation in the test data to establish a slope. *See* section III.F.6 for further detail.

11. Burden on Manufacturers and Testing Facilities

DOE seeks comment on its assessment of the anticipated burden imposed by the proposed test method. *See* section III.G for further detail.

VI. Approval of the Office of the Secretary

The Secretary of Energy has approved publication of this proposed rule.

List of Subjects in 10 CFR Part 430

Administrative practice and procedure, Confidential business information, Energy conservation, Household appliances, Imports, Incorporation by reference, Intergovernmental relations, Small businesses.

Issued in Washington, DC on February 12, 2010.

Cathy Zoi,

Assistant Secretary, Energy Efficiency and Renewable Energy.

For the reasons stated in the preamble, DOE is proposing to amend Part 430 of Chapter II of Title 10, Code of Federal Regulations as set forth below:

PART 430–ENERGY CONSERVATION PROGRAM FOR CONSUMER PRODUCTS

1. The authority citation for Part 430 continues to read as follows:

Authority: 42 U.S.C. 6291–6309; 28 U.S.C. 2461 note.

2. Section 430.3 is amended by:

a. Amending paragraphs (c)(5), (c)(7) and (c)(11) by adding at the end of the paragraphs the words "and Appendix Q1 of subpart B".

b. Redesignating paragraphs (c)(11) as (c)(12); (c)(12) as (c)(15); and (c)(13) as (c)(16).

c. Adding new paragraphs (c)(11), (c)(13) and (c)(14).

These revisions and additions read as follows:

§ 430.3 Materials incorporated by reference.

* * * * *

(c) * * *

(11) ANSI C82.1–2004, Revision of ANSI C82.1–1997 ("ANSI C82.1"), American National Standard for Lamp Ballast—Line-Frequency Fluorescent Lamp Ballast, approved November 19, 2004; IBR approved for Appendix Q of subpart B and Appendix Q1 of subpart B.

* * * * *

(13) ANSI C82.11–2002, Revision of ANSI C82.11–1993 ("ANSI C82.11"), American National Standard for Lamp Ballasts—High-frequency Fluorescent Lamp Ballasts, approved January 17, 2002; IBR approved for Appendix Q of subpart B and Appendix Q1 of subpart B.

(14) ANSI C82.13–2002 ("ANSI C82.13"), American National Standard for Lamp Ballasts—Definitions for Fluorescent Lamps and Ballasts, approved July 23, 2002; IBR approved for Appendix Q of subpart B and Appendix Q1 of subpart B.

* * * * *

3. Section 430.23 is amended by revising paragraph (q) to read as follows:

§ 430.23 Test procedures for the measurement of energy and water consumption.

* * * * *

(q) *Fluorescent Lamp Ballasts.* (1) The Estimated Annual Energy Consumption (EAEC) for fluorescent lamp ballasts, expressed in kilowatt-hours per year, shall be the product of:

(i) The input power in kilowatts as determined in accordance with section 3.1.3.1 of appendix Q to this subpart before the compliance date of the amended standards for fluorescent lamp ballasts or section 7.1.2.2 of appendix Q1 to this subpart beginning on the compliance date of the amended standards for fluorescent lamp ballasts; and

(ii) The representative average use cycle of 1,000 hours per year, the resulting product then being rounded off to the nearest kilowatt-hour per year.

(2) Ballast Efficacy Factor (BEF) shall be as determined in section 4.2 of appendix Q of this subpart before the compliance date of the amended

standards for fluorescent lamp ballasts or section 8.3 of appendix Q1 to this subpart beginning on the compliance date of the amended standards for fluorescent lamp ballasts.

(3) The Estimated Annual Operating Cost (EAOC) for fluorescent lamp ballasts, expressed in dollars per year, shall be the product of:

(i) The representative average unit energy cost of electricity in dollars per kilowatt-hour as provided by the Secretary,

(ii) The representative average use cycle of 1,000 hours per year, and

(iii) The input power in kilowatts as determined in accordance with section 3.1.3.1 of appendix Q to this subpart before the compliance date of the amended standards for fluorescent lamp ballasts or section 7.1.2.2 of appendix Q1 to this subpart beginning on the compliance date of the amended standards for fluorescent lamp ballasts, the resulting product then being rounded off to the nearest dollar per year.

(4) Standby power consumption of certain fluorescent lamp ballasts shall be measured in accordance with section 3.2 of appendix Q to this subpart.

* * * * *

4. Appendix Q to Subpart B of Part 430 is amended by:

a. Adding introductory text.

b. Revising sections 1.15, 1.16, and 1.17.

c. Removing section 2.1, redesignating section 2.2 as section 2, and revising redesignated section 2.

d. Redesignating sections 3.1, 3.2, 3.3, 3.3.1, 3.3.2, 3.3.3, 3.4, 3.4.1, and 3.4.2 as sections 3.1.1, 3.1.2, 3.1.3, 3.1.3.1, 3.1.3.2, 3.1.3.3, 3.1.4, 3.1.4.1, and 3.1.4.2, respectively.

e. Revising redesignated sections 3.1.1, 3.1.2, 3.1.3.1, 3.1.3.2, 3.1.3.3, 3.1.4.1, and 3.1.4.2.

f. Redesignating sections 3.5, 3.5.1, 3.5.2, 3.5.3, 3.5.3.1, 3.5.3.2, 3.5.3.3, and 3.5.3.4 as sections 3.2, 3.2.2, 3.2.3, 3.2.4, 3.2.4.1, 3.2.4.2, 3.2.4.3, and 3.2.4.4, respectively.

g. Adding sections 3.1 and 3.2.1.

h. Revising section 4.

These revisions and additions read as follows:

Appendix Q to Subpart B of Part 430—Uniform Test Method for Measuring the Energy Consumption of Fluorescent Lamp Ballasts

Appendix Q is effective until the compliance date of the amended standards for fluorescent lamp ballasts. After this date, all fluorescent lamp ballasts shall be tested using the provisions of Appendix Q1 except where Appendix Q1 specifies use Appendix Q for testing certain ballasts that do not operate resistors.

* * * * *

1. Definitions

* * * * *

1.15 *Power Factor* means the power input divided by the product of ballast input voltage and input current of a fluorescent lamp ballast, as measured under test conditions specified in ANSI C82.2–2002 (incorporated by reference; *see* § 430.3).

1.16 *Power input* means the power consumption in watts of a ballast an fluorescent lamp or lamps, as determined in accordance with the test procedures specified in ANSI C82.2–2002 (incorporated by reference; *see* § 430.3).

1.17 *Relative light output* means the light output delivered through the use of a ballast divided by the light output of a reference ballast, expressed as a percent, as determined in accordance with the test procedures specified in ANSI C82.2–2002 (incorporated by reference; *see* § 430.3).

* * * * *

2. Test Conditions

The measurement of standby mode power need not be performed to determine compliance with energy conservation standards for fluorescent lamp ballasts at this time. The above statement will be removed as part of a rulemaking to amend the energy conservation standards for fluorescent lamp ballasts to account for standby mode energy consumption, and the following shall apply on the compliance date for such requirements. The test conditions for testing fluorescent lamp ballasts shall be done in accordance with ANSI C82.2–2002 (incorporated by reference; *see* § 430.3). Any subsequent amendment to this standard by the standard setting organization will not affect the DOE test procedures unless and until amended by DOE. The test conditions for measuring active mode energy consumption are described in sections 4, 5, and 6 of ANSI C82.2–2002. The test conditions for measuring standby power are described in sections 5, 7, and 8 of ANSI C82.2–2002. Fluorescent lamp ballasts that are capable of connections to control devices shall be tested with all commercially available compatible control devices connected in all possible configurations. For each configuration, a separate measurement of standby power shall be made in accordance with section 4 of the test procedure.

3. * * *

3.1 Active Mode Energy Efficiency Measurement

3.1.1 The test method for testing the active mode energy efficiency of fluorescent lamp ballasts shall be done in accordance with ANSI C82.2–2002 (incorporated by reference; *see* § 430.3). Where ANSI C82.2–2002 references ANSI C82.1–1997, the operator shall use ANSI C82.1 (incorporated by reference; *see* § 430.3) for testing low-frequency ballasts and ANSI C82.11 (incorporated by reference; *see* § 430.3) for high-frequency ballasts.

3.1.2 *Instrumentation.* The instrumentation shall be as specified by sections 5, 7, 8, and 15 of ANSI C82.2–2002 (incorporated by reference; *see* § 430.3).

3.1.3 * * *

3.1.3.1 *Input Power.* Measure the input power (watts) to the ballast in accordance with ANSI C82.2–2002 (incorporated by reference; *see* § 430.3), section 4.

3.1.3.2 *Input Voltage.* Measure the input voltage (volts) (RMS) to the ballast in accordance with ANSI C82.2–2002 (incorporated by reference; *see* § 430.3), section 3.2.1 and section 4.

3.1.3.3 *Input Current.* Measure the input current (amps) (RMS) to the ballast in accordance with ANSI C82.2–2002 (incorporated by reference; *see* § 430.3), section 3.2.1 and section 4.

3.1.4 * * *

3.1.4.1 Measure the light output of the reference lamp with the reference ballast in accordance with ANSI C82.2–2002 (incorporated by reference; *see* § 430.3), section 12.

3.1.4.2 Measure the light output of the reference lamp with the test ballast in accordance with ANSI C82.2–2002 (incorporated by reference; *see* § 430.3), section 12.

3.2. * * *

3.2.1 The test for measuring standby mode energy consumption of fluorescent lamp ballasts shall be done in accordance with ANSI C82.2–2002 (incorporated by reference; *see* § 430.3).

* * * * *

4. Calculations

4.1 Calculate Relative Light Output

$$\frac{\text{Photocell output of lamp on test ballast}}{\text{Photocell output of lamp on ref. ballast}} \times 100 = \textit{relative light}\ \text{output}$$

Where:

Photocell output of lamp on test ballast is determined in accordance with section 3.1.4.2, expressed in watts, and

Photocell output of lamp on ref. ballast is determined in accordance with section 3.1.4.1, expressed in watts.

4.2 Determine the Ballast Efficacy Factor (BEF) Using the Following Equations

(a) Single lamp ballast.

$$BEF = \frac{\text{relative light output}}{\text{input power}}$$

(b) Multiple lamp ballast.

$$BEF = \frac{\text{average relative light output}}{\text{input power}}$$

Where:

Input power is determined in accordance with section 3.1.3.1,

Relative light output as defined in section 4.1, and

Average relative light output is the relative light output, as defined in section 4.1, for all lamps, divided by the total number of lamps.

4.3 Determine Ballast Power Factor (PF)

$$PF = \frac{Input\ power}{\text{Input voltage} \times \text{input current}}$$

Where:

Input power is as defined in section 3.1.3.1,

Input voltage is determined in accordance with section 3.1.3.2, expressed in volts, and

Input current is determined in accordance with section 3.1.3.3, expressed in amps.

5. Appendix Q1 is added to Subpart B of Part 430 to read as follows:

Appendix Q1 to Subpart B of Part 430—Uniform Test Method for Measuring the Energy Consumption of Fluorescent Lamp Ballasts

Appendix Q1 is effective on the compliance date of the amended standards for fluorescent lamp ballasts. Prior to this date, all fluorescent lamp ballasts shall be tested using the provisions of Appendix Q.

1. If the operator determines that a ballast does not operate a resistor load bank, then the operator should use the test procedure described in Appendix Q to Subpart B of Part 430. To determine that a ballast does not operate a resistor load bank, the input power, voltage, or current to the ballast should equal zero when tested in accordance with this Appendix Q1 to Subpart B of Part 430.

2. Where ANSI C82.2–2002 (incorporated by reference; *see* § 430.3) references ANSI C82.1–1997, the operator shall use ANSI C82.1 (incorporated by reference; *see* § 430.3) for testing low-frequency ballasts and shall use ANSI C82.11 (incorporated by reference; *see* § 430.3) for high-frequency ballasts.

3. Definitions

3.1. *Commercial ballast* is a fluorescent lamp ballast that is not a residential ballast as defined in Section 3.8 and meets technical standards for non-consumer RF lighting devices as specified in subpart C of 47 CFR part 18.

3.2. *Electrode heating* refers to power delivered to the lamp by the ballast for the purpose of raising the temperature of the lamp electrode or filament. ANSI standards generally refer to this process as cathode heating.

3.3. *High-frequency ballast* is as defined in ANSI C82.13 (incorporated by reference; *see* § 430.3).

3.4. *Instant-start* is the starting method used instant-start systems as defined in ANSI C82.13 (incorporated by reference; *see* § 430.3).

3.5. *Low-frequency ballast* is a fluorescent lamp ballast that operates at a supply frequency of 50 to 60 Hz and operates the lamp at the same frequency as the supply.

3.6. *Programmed-start* is the starting method used in programmed start systems as defined in ANSI C82.13 (incorporated by reference; *see* § 430.3).

3.7. *Rapid-start* is the starting method used in rapid-start type systems as defined in ANSI C82.13 (incorporated by reference; *see* § 430.3).

3.8. *Residential ballast* is a fluorescent lamp ballast designed and labeled for use in residential applications. Residential ballasts must meet the technical standards for consumer RF lighting devices as specified in subpart C of 47 CFR part 18.

3.9. *Resistor load bank* means a network of resistors used to model the load placed on a fluorescent lamp ballast by a fluorescent lamp.

3.10. *RMS* is the root mean square of a varying quantity.

4. Instruments

4.1. All instruments shall be as specified by ANSI C82.2–2002 (incorporated by reference; *see* § 430.3).

4.2. *Power Analyzer.* In addition to the specifications in ANSI C82.2–2002 (incorporated by reference; *see* § 430.3), the power analyzer shall have a maximum 100 pF capacitance to ground and frequency response between 40 Hz and 1 MHz.

4.3. *Current Probe.* In addition to the specifications in ANSI C82.2–2002 (incorporated by reference; *see* § 430.3), the current probe shall be galvanically isolated and have frequency response between 40 Hz and 20 MHz.

5. Test Setup

5.1. The ballast shall be connected to a main power source and to the resistor load bank according to the manufacturer's wiring instructions. Where the wiring diagram indicates connecting the ballast lead to a lamp, the lead should be connected to a resistor load bank.

5.1.1. Figures 1 and 2 illustrate the resistor load bank used to model one fluorescent lamp. The four resistors labeled as $R_{1/2E}$ represent the electrodes, and R_{arc} represents the lamp arc.

5.1.2. Wire lengths between the ballast and resistor load bank shall be the length provided by the ballast manufacturer.

5.2. A ballast shall be tested using one resistor load bank to simulate one lamp. A ballast shall be connected to the number of resistor load banks equal to the maximum number of lamps a ballast is designed to operate.

5.3. A ballast designed to operate a lamp at high-frequency (as defined in section 3.3) shall use a resistor with resistance that simulates high-frequency operation. A ballast designed to operate a lamp a low-frequency (as defined in section 3.5) shall use a resistor with resistance that simulates low-frequency operation.

5.4. A ballast shall be tested with a resistor load bank with the resistances indicated in Table A.

5.5. Power Analyzer

5.5.1. The power analyzer shall have n+1 channels where n is the number of lamps a ballast operates.

5.5.2. *Output Voltage.* Leads from the power analyzer should attach to each resistor load bank according to Figure 1 for rapid- and programmed-start ballasts and Figure 2 for instant-start ballasts.

5.5.3. *Output Current.* A current probe shall be positioned on each resistor load bank according to Figure 1 for rapid- and programmed-start ballasts and Figure 2 for instant-start ballasts.

TABLE A—SIMULATED LAMP RESISTOR VALUES

Ballast type	Nominal lamp wattage	Lamp diameter and base	Low-frequency operation resistance (Ohms)		High-frequency operation resistance (Ohms)	
			Electrode ($R_{1/2E}$)	Lamp arc (R_{arc})	Electrode ($R_{1/2E}$)	Lamp arc (R_{arc})
Ballasts that operate one, two, three, four, five, or six straight-shaped lamps (commonly referred to as 4-foot medium bipin lamps) with medium bipin bases, a nominal overall length of 48 inches, a rated wattage of 25W or more, and an input voltage at or between 120V and 277V.	32	T8 MBP	5.75	439	5.75	760
	34	T12 MBP	4.8	151	4.8	204

TABLE A—SIMULATED LAMP RESISTOR VALUES—Continued

Ballast type	Nominal lamp wattage	Lamp diameter and base	Low-frequency operation resistance (Ohms)		High-frequency operation resistance (Ohms)	
			Electrode ($R_{1/2E}$)	Lamp arc (R_{arc})	Electrode ($R_{1/2E}$)	Lamp arc (R_{arc})
Ballasts that operate one, two, three, four, five, or six U-shaped lamps (commonly referred to as 2-foot U-shaped lamps) with medium bipin bases, a nominal overall length between 22 and 25 inches, a rated wattage of 25W or more, and an input voltage at or between 120V and 277V.	32 34	T8 MBP ..... T12 MBP	5.75 4.8	439 151	5.75 4.8	760 204
Ballasts that operate one or two rapid-start lamps (commonly referred to as 8-foot high output lamps) with recessed double contact bases, a nominal overall length of 96 inches and an input voltage at or between 120V and 277V.	86 95	T8 HO RDC T12 HO RDC	N/A 1.6	N/A 131	4.75 1.6	538 204
Ballasts that operate one or two instant-start lamps (commonly referred to as 8-foot slimline lamps) with single pin bases, a nominal overall length of 96 inches, a rated wattage of 52W or more, and an input voltage at or between 120V and 277V.	59 60	T8 slimline SP. T12 slimline SP.	N/A* N/A*	876 313	N/A* N/A*	1256 431
Ballasts that operate one or two straight-shaped lamps (commonly referred to as 4-foot miniature bipin standard output lamps) with miniature bipin bases, a nominal length between 45 and 48 inches, a rated wattage of 26W or more, and an input voltage at or between 120V and 277V.	28	T5 Mini-BP ..	N/A	N/A	20	950
Ballasts that operate one, two, three, or four straight-shaped lamps (commonly referred to as 4-foot miniature bipin high output lamps) with miniature bipin bases, a nominal length between 45 and 48 inches, a rated wattage of 49W or more, and an input voltage at or between 120V and 277V.	54	T5 Mini-BP ..	N/A	N/A	4	255
Ballasts that operate one, two, three, or four straight-shaped lamps (commonly referred to as 4-foot medium bipin lamps) with medium bipin bases, a nominal overall length of 48 inches, a rated wattage of 25W or more, an input voltage at or between 120V and 277V, a power factor of less than 0.90, and that are designed and labeled for use in residential applications.	32 34	T8 MBP ..... T12 MBP	5.75 4.8	439 151	5.75 4.8	760 204
Ballasts that operate one, two, three, four, five, or six rapid-start lamps (commonly referred to as 8-foot high output lamps) with recessed double contact bases, a nominal overall length of 96 inches, an input voltage at or between 120V and 277V, and that operate at ambient temperatures of 20 °F or less and are used in outdoor signs.	86 110	T8 HO RDC T12 HO RDC	N/A 1.6	N/A 166	4.75 1.6	538 275

MBP, Mini-BP, RDC, and SP represent medium bipin, miniature bipin, recessed double contact, and single pin, respectively.

* The resistor load bank representing 8-foot slimline single pin (SP) lamps does not have electrode resistors.

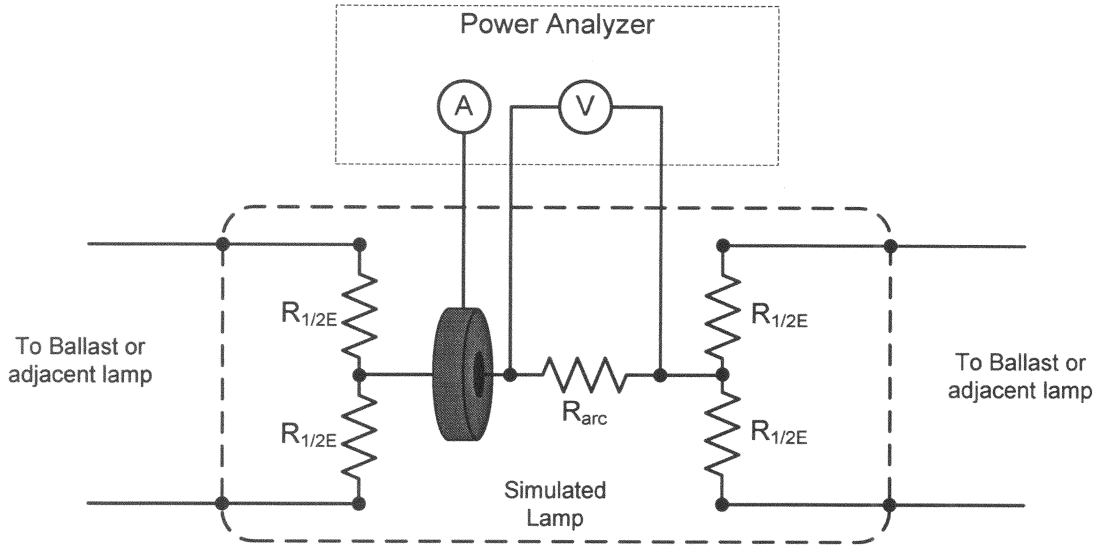

Figure 1 Instrumentation Placement for Ballasts that Operate MBP, RDC, and MiniBP Lamps

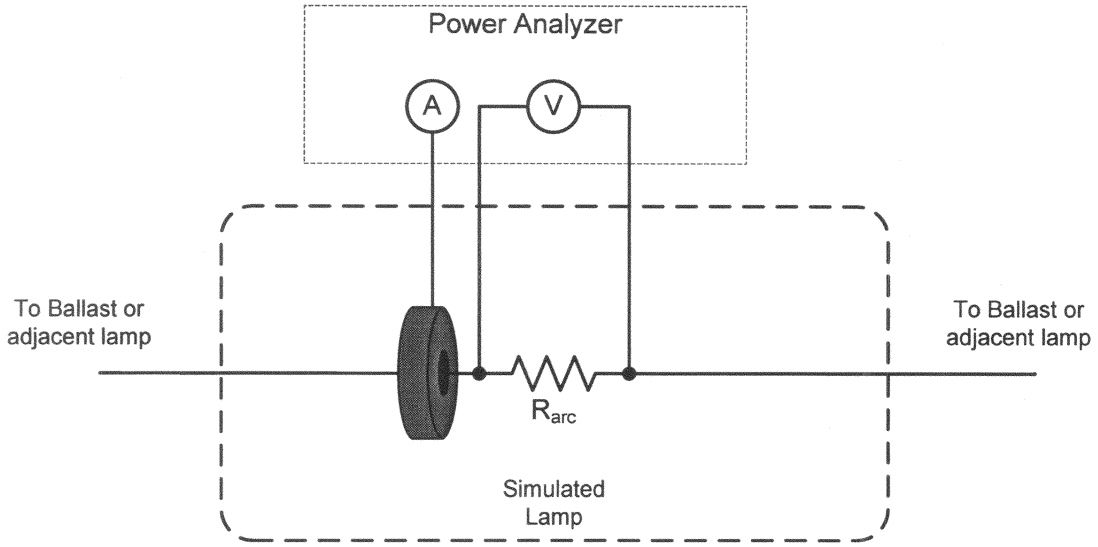

Figure 2 Instrumentation Placement for Ballasts that Operate SP Lamps

6. Test Conditions

6.1. The test conditions for testing fluorescent lamp ballasts shall be done in accordance with ANSI C82.2–2002 (incorporated by reference; *see* § 430.3). DOE further specifies that the following revisions of the normative references indicated in ANSI C82.2–2002) should be used in place of the references directly specified in ANSI C82.2–2002: ANSI C78.81 (incorporated by reference; *see* § 430.3), ANSI C78.901 (incorporated by reference; *see* § 430.3), ANSI C82.1 (incorporated by reference; *see* § 430.3), ANSI C82.3 (incorporated by reference; *see* § 430.3), ANSI C82.11 (incorporated by reference; *see* § 430.3), and ANSI C82.13 (incorporated by reference; *see* § 430.3). All other normative references shall be as specified in ANSI C82.2–2002.

6.2. *Temperature Stabilization.* Ballasts shall be thermally conditioned for at least 4 hours at room temperature (25 ± 2 °C), with normal room or lab ventilation.

6.3. *Input Voltage.* The directions in ANSI C82.2–2002 (incorporated by reference; *see* § 430.3) section 4.1 should be ignored with the following directions for input voltage used instead. For commercial ballasts capable of operating at multiple voltages, the ballast shall be tested 277V ± 0.1%. For ballasts designed and labeled for residential applications and capable or operating at multiple voltages, the ballast shall be tested at 120V ± 0.1%.

6.4. *Duty Cycle.* The duty cycle shall be no more than 50%. For every operational minute, the resistor load bank shall be rested at zero power for at least one minute.

7. Test Method

7.1. Ballast Efficiency

7.1.1. The ballast shall be connected to the appropriate resistor load bank and to measurement instrumentation as indicated by the Test Setup in section 5.

7.1.2. The ballast shall be operated for one minute followed by an instantaneous data

capture of the parameters described in sections 7.1.2.1 through 7.1.2.4.

7.1.2.1. *Output Power.* The power analyzer shall calculate output power by capturing voltage across each lamp arc resistor using the setup described in 5.5.2 and current to the lamp according to the setup described in 5.5.3 and summing the power for each lamp.

7.1.2.2. *Input Power.* Measure the input power (watts) to the ballast in accordance with ANSI C82.2–2002 (incorporated by reference; *see* § 430.3), section 7.

7.1.2.3. *Input Voltage.* Measure the input voltage (volts) (RMS) to the ballast in accordance with ANSI C82.2–2002 (incorporated by reference; *see* § 430.3), section 3.2.1 and section 4.

7.1.2.4. *Input Current.* Measure the input current (amps) (RMS) to the ballast in accordance with ANSI C82.2–2002 (incorporated by reference; *see* § 430.3), section 3.2.1 and section 4.

7.2. Ballast Factor

7.2.1. ANSI C82.2–2002 (incorporated by reference; *see* § 430.3) shall be further specified for the purpose of measuring ballast factor by the following:

7.2.1.1. The reference lamp shall be operated at the specified input voltage to the reference circuit.

7.2.1.2. Electrode heating shall be used in the reference circuit for all ballasts that operate bipin (MBP, mini-BP) or recessed double contact (RDC) lamps as indicated in Table A. Electrode heating shall not be used in the reference circuit for single pin lamps.

7.2.1.3. Light output measurements shall be used for all ballasts, including instant-start ballasts. Power measurements shall not be used.

7.2.2. Measure the light output of the reference lamp with the reference ballast in accordance with ANSI C82.2–2002 (incorporated by reference; *see* § 430.3), section 12, using section 7.2.1 to further specify ANSI C82.2–2002. The reference lamp shall have the nominal wattage corresponding to the test ballast as indicated in Table A.

7.2.3. Measure the light output of the reference lamp with the test ballast in accordance with ANSI C82.2–2002 (incorporated by reference; *see* § 430.3), section 12, using section 7.2.1 to further specify ANSI C82.2–2002 The reference lamp shall have the nominal wattage corresponding to the test ballast as indicated in Table A.

8. Calculations

8.1. Calculate Ballast Factor (BF)

$$\text{Ballast Factor} = \frac{\text{Photocell output of lamp on test ballast}}{\text{Photocell output of lamp on reference ballast}} \times 100$$

Where:

Photocell output of lamp on test ballast is determined in accordance with section 7.2.2, expressed in watts, and

Photocell output of lamp on reference ballast is determined in accordance with section 7.2.3, expressed in watts.

8.2. Calculate Ballast Efficiency (BE)

8.3. Calculate Ballast Efficacy Factor (BEF). Multiply BE by the Appropriate Conversion Factor in Table B. BEF = Conversion Factor × BE

TABLE B—CONVERSION FACTOR, BE TO BEF

Ballast and lamp type	Starting method*	Ballast factor**	Number of lamps					
			One	Two	Three	Four	Five	Six
Four-Foot MBP, and Two-Foot U–Shaped.	IS and RS (not PS)	High	3.233	1.624	1.081	0.812	0.650	0.542
		Normal	3.378	1.697	1.129	0.849	0.679	0.566
		Low	3.430	1.723	1.147	0.862	0.690	0.575
	PS	High	3.204	1.610	1.071	0.808	0.644	0.537
		Normal	3.348	1.682	1.119	0.844	0.673	0.561
		Low	3.400	1.708	1.137	0.857	0.684	0.570
Four-Foot T5, MiniBP SO	All	High	2.910	1.584	.....	.....	.....	.....
		Normal	3.041	1.655	.....	.....	.....	.....
		Low	3.088	1.680	.....	.....	.....	.....
Four-Foot T5, MiniBP HO	All	All	1.703	0.927	0.649	0.504	.....	.....
Eight-Foot SP Slimline	All	High	1.653	0.841	.....	.....	.....	.....
		Normal	1.727	0.878	.....	.....	.....	.....
		Low	1.754	0.892	.....	.....	.....	.....
Eight-Foot RDC HO	IS and RS (not PS)	All	1.128	0.614	.....	.....	.....	.....
	PS	All	1.138	0.619	.....	.....	.....	.....
Residential Ballast, Four-Foot MBP, and Two-Foot U–Shaped.	IS and RS (not PS)	All	3.357	1.686	1.122	0.853	.....	.....
	PS	All	3.328	1.671	1.113	0.846	.....	.....
Sign Ballast	All	All	0.888	0.483	0.338	0.263	0.216	0.184

*IS = Instant-start; RS = Rapid-start; PS = Programmed-start

**High ballast factor: BF ≥ 1.10; Normal ballast factor: 0.78 > BF >1.10; Low ballast factor: BF ≤ 0.78.

8.4. Calculate Power Factor (PF)

$$\text{Power Factor} = \frac{\text{Input Power}}{\text{Input Voltage} \times \text{Input Current}}$$

Where:

Input power is determined in accordance with section 7.1.2.2,

Input voltage is determined in accordance with section 7.1.2.2, and

Input current is determined in accordance with section 7.1.2.3.

6. Section 430.62 is amended by revising paragraph (a)(1), and adding new paragraphs (a)(4)(xxv) and (a)(6) to read as follows:

§ 430.62 Submission of data.

(a)(1) Except as provided in paragraph (a)(2) and (a)(6) of this section, each manufacturer or private labeler before distributing in commerce any basic model of a covered product subject to the applicable energy conservation standard or water conservation standard (in the case of faucets, showerheads, water closets, and urinals) set forth in subpart C of this part shall certify by means of a compliance statement and a certification report that each basic model(s) meets the applicable energy conservation standard or water conservation standard (in the case of faucets, showerheads, water closets, and urinals) as prescribed in section 325 of the Act. The compliance statement, signed by the company official submitting the statement, and the certification report(s) shall be sent by certified mail to: Department of Energy, Office of Energy Efficiency and Renewable Energy, Office of Codes and Standards, Forrestal Building, 1000 Independence Avenue, SW., Washington, DC 20585–0121.

* * * * *

(4) * * *

(xxv) Fluorescent Lamp Ballasts, the ballast efficacy factor (BEF) and the ballast power factor (PF).

* * * * *

(6) Each manufacturer or private labeler of a basic model of a covered fluorescent lamp ballast shall file a compliance statement and a certification report to DOE using the test procedure described in Appendix Q to Subpart B of Part 430 within 1 year of publication of the fluorescent lamp ballast test procedure and energy conservation standard final rulemaking. Furthermore, each manufacturer or private labeler of a basic model of a covered fluorescent lamp ballast shall file a compliance statement and a certification report to DOE using the test procedure described in Appendix Q1 to Subpart B of Part 430 before within 4 years of publication of the fluorescent lamp ballast test procedure and energy conservation standards final rulemaking.

* * * * *

[FR Doc. 2010–6374 Filed 3–23–10; 8:45 am]

BILLING CODE 6450–01–P

DEPARTMENT OF ENERGY

10 CFR Part 430

[Docket No. EERE–2007–BT–STD–0016]

RIN 1904–AB50

Energy Conservation Standards for Fluorescent Lamp Ballasts: Public Meeting and Availability of the Preliminary Technical Support Document

AGENCY: Office of Energy Efficiency and Renewable Energy, Department of Energy.

ACTION: Notice of public meeting and availability of preliminary technical support document.

SUMMARY: The U.S. Department of Energy (DOE) will hold a public meeting to discuss and receive comments on: the product classes that DOE plans to analyze for purposes of establishing energy conservation standards for fluorescent lamp ballasts; the analytical framework, models, and tools that DOE is using to evaluate standards for these products; the results of preliminary analyses DOE performed for these products; and potential energy conservation standard levels derived from these analyses that DOE could consider for these products. DOE encourages written comments on these subjects. To inform interested parties and facilitate this process, DOE has prepared an agenda, a preliminary technical support document (TSD), and briefing materials, which are available at *http://www1.eere.energy.gov/buildings/appliance_standards/residential/fluorescent_lamp_ballasts.html.*

DATES: DOE will hold a public meeting on Monday, April 26, 2010, beginning at 9 a.m. in Washington, DC. The agenda for the public meeting will first cover the concurrent test procedure rulemaking for fluorescent lamp ballasts (see proposal in today's **Federal Register**), and then this energy conservation standards rulemaking for the same products. Any person requesting to speak at the public meeting should submit such a request, along with an electronic copy of the statement to be given at the public meeting, before 4 p.m., Monday, April 12, 2010. Written comments are welcome, especially following the public meeting, and should be submitted by May 10, 2010.

ADDRESSES: The public meeting will be held at the U.S. Department of Energy, Forrestal Building, Room 8E–089, 1000 Independence Avenue, SW., Washington, DC 20585–0121. Please note that foreign nationals participating in the public meeting are subject to advance security screening procedures. If a foreign national wishes to participate in the public meeting, please inform DOE of this fact as soon as possible by contacting Ms. Brenda Edwards at (202) 586–2945 so that the necessary procedures can be completed. Interested persons may submit comments, identified by docket number EERE–2007–BT–STD–0016, by any of the following methods:

- *Federal eRulemaking Portal: http://www.regulations.gov.* Follow the instructions for submitting comments.
- *E-mail: ballasts.rulemaking@ee.doe.gov.* Include EERE–2007–BT–STD–0016 and/or RIN 1904–AB50 in the subject line of the message.
- *Postal Mail:* Ms. Brenda Edwards, U.S. Department of Energy, Building Technologies Program, Mailstop EE–2J, Public Meeting for Fluorescent Lamp Ballasts, EERE–2007–BT–STD–0016, 1000 Independence Avenue, SW., Washington, DC 20585–0121. Telephone (202) 586–2945. Please submit one signed paper original.
- *Hand Delivery/Courier:* Ms. Brenda Edwards, U.S. Department of Energy, Building Technologies Program, Sixth Floor, 950 L'Enfant Plaza, SW., Washington, DC 20024. Telephone (202) 586–2945. Please submit one signed paper original.

Instructions: All submissions received must include the agency name and docket number.

Docket: For access to the docket to read background documents or a copy of the transcript of the public meeting or comments received, go to the U.S. Department of Energy, Sixth Floor, 950 L'Enfant Plaza, SW., Washington, DC 20024, (202) 586–2945, between 9 a.m. and 4 p.m., Monday through Friday, except Federal holidays. Please call Ms. Brenda Edwards at (202) 586–2945 for additional information regarding visiting the Resource Room.

FOR FURTHER INFORMATION CONTACT: Direct requests for additional information to Ms. Linda Graves, U.S. Department of Energy, Office of Energy Efficiency and Renewable Energy, Building Technologies, EE–2J, 1000 Independence Avenue, SW., Washington, DC 20585–0121, (202) 586–8654. E-mail: *Linda.Graves@ee.doe.gov.* In the Office of General Counsel, contact Ms. Francine Pinto or Ms. Elizabeth Kohl, U.S. Department of Energy, Office of General Counsel, GC–71, 1000 Independence Avenue, SW., Washington, DC 20585, (202) 586–7432. E-mail: *Francine.Pinto@hq.doe.gov; Elizabeth.Kohl@hq.doe.gov.*

SUPPLEMENTARY INFORMATION:

I. Statutory Authority
II. History of Standards Rulemaking for Fluorescent Lamp Ballasts
A. Background
B. Current Rulemaking Process
III. Summary of the Analyses
A. Engineering Analysis
B. Energy Use Characterization
C. Markups To Determine Installed Price
D. Life-Cycle Cost and Payback Period Analyses
E. National Impact Analysis

I. Statutory Authority

The Energy Policy and Conservation Act (EPCA) of 1975, Public Law 94–163 (42 U.S.C. 6291–6309), established an energy conservation program for major household appliances. Amendments to EPCA in the National Appliance Energy Conservation Amendments of 1988 (NAECA 1988), Public Law 100–357, established energy conservation standards for fluorescent lamp ballasts. These amendments also required that DOE (1) conduct two rulemaking cycles to determine whether these standards should be amended; and (2) for each rulemaking cycle, determine whether the standards in effect for fluorescent lamp ballasts should be amended to apply to additional fluorescent lamp ballasts. (42 U.S.C. 6295(g)(7)(A)–(B)). On September 19, 2000, DOE published a final rule in the **Federal Register**, which completed the first rulemaking cycle to amend energy conservation standards for fluorescent lamp ballasts. 65 FR 56740, 56740–56749 (September 19, 2000). This rulemaking encompasses DOE's second cycle of review to determine whether the standards in effect for fluorescent lamp ballasts should be amended and whether the standards should be applicable to additional fluorescent lamp ballasts.

DOE must design each standard for these products to (1) achieve the maximum improvement in energy efficiency that is technologically feasible and economically justified, and (2) result in significant conservation of energy. (42 U.S.C. 6295(o)(2)(A) and (o)(3)) To determine whether a proposed standard is economically justified, DOE must determine whether the benefits of the standard exceed its burdens to the greatest extent practicable, weighing the following seven factors:

1. The economic impact of the standard on manufacturers and consumers of products subject to the standard;

2. The savings in operating costs throughout the estimated average life of the covered products in the type (or class) compared to any increase in the price, initial charges, or maintenance expenses for the covered products which are likely to result from the imposition of the standard;

3. The total projected amount of energy savings likely to result directly from the imposition of the standard;

4. Any lessening of the utility or the performance of the covered products likely to result from the imposition of the standard;

5. The impact of any lessening of competition, as determined in writing by the Attorney General, that is likely to result from the imposition of the standard;

6. The need for national energy conservation; and

7. Other factors the Secretary [of Energy] considers relevant.

(42 U.S.C. 6295(o)(2)(B)(i))

Before proposing a standard, DOE typically seeks public input on the analytical framework, models, and tools that will be used to evaluate standards; the results of preliminary analyses; and potential energy conservation standard levels derived from these analyses. DOE is publishing this document to announce the availability of the preliminary technical support document (TSD), which details the preliminary analyses, discusses the comments on the framework document, and summarizes the preliminary results. In addition, DOE is announcing a public meeting to solicit feedback from interested parties on its analytical framework, models, and preliminary results.

II. History of Standards Rulemaking for Fluorescent Lamp Ballasts

A. Background

As mentioned above, NAECA 1988 amended EPCA to establish energy conservation standards for fluorescent lamp ballasts and require that DOE (1) conduct two rulemaking cycles to determine whether these standards should be amended; and (2) for each rulemaking cycle, determine whether the standards in effect for fluorescent lamp ballasts should be amended so that they would be applicable to additional fluorescent lamp ballasts. (42 U.S.C. 6295(g)(7)(A)-(B)) On September 19, 2000, DOE published a final rule in the **Federal Register**, which completed the first of the two rulemaking cycles to evaluate and amend the energy conservation standards for fluorescent lamp ballasts (hereafter "the 2000 Ballast Rule"). 65 FR 56740 (September 19, 2000). This rulemaking established a consensus standard representing an agreement between the fluorescent lamp ballast industry and energy efficiency advocacy organizations. A table of the standards DOE codified can be found in appendix 3A of the preliminary TSD and in 10 CFR 430.32(m)(3).

Congress promulgated new energy conservation standards for certain fluorescent lamp ballasts under the Energy Policy Act of 2005 (EPACT 2005), Public Law 109–58. (EPACT section 135(c)(2); codified at 42 U.S.C. 6295(g)(8)(A)) On October 18, 2005, DOE published a final rule in the **Federal Register** codifying those new fluorescent lamp ballast standards into the Code of Federal Regulations at 10 CFR 430.32(m). 70 FR 60407. These standards established ballast efficacy requirements for "energy saver" versions of full-wattage ballasts, such as the F34T12 ballast.

On December 19, 2007, the President signed the Energy Independence and Security Act of 2007 (EISA 2007; Pub. L. 110–140). EISA 2007 did not amend standards for fluorescent lamp ballasts, but instead directed DOE to amend its test procedure for fluorescent lamp ballasts to incorporate a measure of standby mode and off mode energy consumption. (42 U.S.C. 6295(gg)(2)) DOE published a notice of proposed rulemaking (NOPR) for the standby and off mode test procedure on January 21, 2009. 74 FR 3450. In addition, DOE is directed to incorporate standby mode and off mode energy use in any amended (or new) standard adopted after July 1, 2010. (42 USC 6295(gg)(3)) Because this energy conservation standards rulemaking for fluorescent lamp ballasts will be completed in 2011, the requirement to incorporate standby mode energy use into the energy conservation standards analysis is applicable.

This rulemaking encompasses DOE's second cycle of review to determine whether the standards in effect for fluorescent lamp ballasts should be amended and whether the standards should be made applicable to additional fluorescent lamp ballasts. This rulemaking also addresses 42 U.S.C. 6295(gg)(3), in which DOE is directed to incorporate standby mode and off mode

energy use in any amended (or new) standard adopted after July 1, 2010.

Under the consolidated Consent Decree in *New York* v. *Bodman,* No. 05 Civ. 7807 (S.D.N.Y. filed Sept. 7, 2005) and *Natural Resources Defense Council* v. *Bodman,* No. 05 Civ. 7808 (S.D.N.Y. filed Sept. 7, 2005) the U.S. Department of Energy is required to publish a final rule amending energy conservation standards for fluorescent lamp ballasts no later than June 30, 2011.

B. Current Rulemaking Process

On January 22, 2008, DOE published a notice announcing the availability of the framework document, "Energy Conservation Standards Rulemaking Framework Document for Fluorescent Lamp Ballasts," and a public meeting to discuss the proposed analytical framework for the rulemaking. 73 FR 3653. DOE also posted the framework document on its website describing the procedural and analytical approaches DOE anticipated using to evaluate the establishment of energy conservation standards for fluorescent lamp ballasts. This document is available at *http://www1.eere.energy.gov/buildings/appliance_standards/residential/pdfs/ballast_framework_011408.pdf.*

DOE held a public meeting on February 6, 2008, to describe the various rulemaking analyses DOE would conduct, such as the engineering analysis, the life-cycle cost (LCC) and payback period (PBP) analyses, and the national impact analysis (NIA); the methods for conducting them; and the relationship among the various analyses. Manufacturers, trade associations, and environmental advocates attended the meeting. The participants discussed multiple issues, including the scope of covered fluorescent lamp ballasts, definitions, test procedures, the ballast efficiency metric, DOE's engineering analysis, life-cycle costs, efficiency levels, and energy savings.

Comments received since publication of the framework document have helped DOE identify and resolve issues involved in the preliminary analyses. Chapter 2 of the preliminary TSD summarizes and addresses the comments DOE received.

III. Summary of the Analyses

DOE conducted in-depth technical analyses in the following areas for the fluorescent lamp ballasts currently under consideration: (1) Engineering, (2) energy-use characterization, (3) markups to determine product price, (4) LCC and PBP, and (5) national impact. The preliminary TSD presents the methodology and results of each analysis. The analyses are described in more detail below.

DOE conducted several other analyses that either support the five major analyses or are preliminary analyses that will be expanded in the NOPR. These include the market and technology assessment; the screening analysis, which contributes to the engineering analysis; and the shipments analysis, which contributes to the NIA. DOE has begun some preliminary work on the manufacturer impact analysis and identified the methods to be used for the LCC subgroup analysis, the environmental assessment, the employment analysis, the regulatory impact analysis, and the utility impact analysis. DOE will expand on these in the NOPR.

A. Engineering Analysis

The engineering analysis establishes the relationship between the manufacturer selling price and the efficiency of the product. This relationship serves as the basis for cost-benefit calculations for individual consumers, manufacturers, and the nation. The engineering analysis identifies representative baseline models, which is the starting point for analyzing technologies that provide energy efficiency improvements. A baseline model refers to a model or models having features and technologies typically found in products currently offered for sale. The baseline model in each equipment class represents the characteristics of certain fluorescent lamp ballasts in that class and, for ballasts already subject to energy conservation standards, usually is a model that just meets the current standard. Chapter 5 of the preliminary TSD discusses the engineering analysis.

B. Energy Use Characterization

The energy use characterization provides estimates of annual energy consumption for fluorescent lamp ballasts, which DOE uses in the LCC and PBP analyses and the NIA. DOE developed energy consumption estimates for all of the product classes analyzed in the engineering analysis as the basis for its energy use estimates. Chapters 2 and 6 of the preliminary TSD provide detail on the energy use characterization.

C. Markups to Determine Installed Price

DOE derives the installed prices for products based on manufacturer markups, retailer markups, distributor markups, contractor markups, builder markups, and sales taxes. In deriving these markups, DOE has determined the distribution channels for product sales, the markup associated with each party in the distribution channels, and the existence and magnitude of differences between markups for baseline products (baseline markups) and for more-efficient products (incremental markups). DOE calculates both overall baseline and overall incremental markups based on the product markups at each step in the distribution channel. The overall incremental markup relates the change in the manufacturer sales price of higher-efficiency models (the incremental cost increase) to the change in the retailer or distributor sales price. Chapters 2 and 7 of the preliminary TSD provide detail on the estimation of markups.

D. Life-Cycle Cost and Payback Period Analyses

The LCC and PBP analyses determine the economic impact of potential standards on individual consumers. The LCC is the total consumer expense for a product over the life of the product. The LCC analysis compares the LCCs of products designed to meet possible energy conservation standards with the LCCs of the products likely to be installed in the absence of standards. DOE determines LCCs by considering (1) total installed cost to the purchaser (which consists of manufacturer selling price, sales taxes, distribution chain markups, and installation cost); (2) the operating expenses of the products (energy use and maintenance); (3) product lifetime; and (4) a discount rate that reflects the real consumer cost of capital and puts the LCC in present-value terms. The PBP represents the number of years needed to recover the increase in purchase price (including installation cost) of more efficient products through savings in the operating cost of the product. PBP is equal to the change in total installed cost due to increased efficiency divided by the change in annual operating cost from increased efficiency. Chapters 2 and 8 of the preliminary TSD provide detail on the LCC and PBP analyses.

E. National Impact Analysis

The NIA estimates the NES and the NPV of total consumer costs and savings expected to result from new standards at specific efficiency levels (referred to as candidate standard levels). DOE calculated NES and NPV for each level for each candidate standard for fluorescent lamp ballasts as the difference between a base-case forecast (without new standards) and the standards-case forecast (with standards). DOE determined national annual energy consumption by multiplying the number of units in use (by vintage) by

the average unit energy consumption (also by vintage). Cumulative energy savings are the sum of the annual NES determined over a specified time period. The national NPV is the sum over time of the discounted net savings each year, which consists of the difference between total operating cost savings and increases in total installed costs. Critical inputs to this analysis include shipments projections, retirement rates (based on estimated product lifetimes), and estimates of changes in shipments and retirement rates in response to changes in product costs due to standards. Chapters 2 and 10 of the preliminary TSD provide detail on the NIA.

DOE consulted with interested parties on all of the analyses and invites further input on these topics. The preliminary analytical results are subject to revision following review and input from the public. A revised TSD will be made available upon issuance of a NOPR. The final rule will contain the final analysis results and be accompanied by a final rule TSD.

DOE encourages those who wish to participate in the public meeting to obtain the preliminary TSD and be prepared to discuss its contents. However, public meeting participants need not limit their comments to the topics identified in the preliminary TSD. DOE is also interested in receiving information on other relevant issues that participants believe would affect energy conservation standards for these products or that DOE should address in the NOPR.

DOE welcomes all interested parties, regardless of whether they participate in the public meeting, to submit comments and information in writing by May 10, 2010.

The public meeting will be conducted in an informal, conference style. A court reporter will be present to record the minutes of the meeting. There shall be no discussion of proprietary information, costs or prices, market shares, or other commercial matters regulated by United States antitrust laws.

After considering all comments and additional information it receives from interested parties or through further analyses, DOE will prepare and publish in the **Federal Register** a NOPR. The NOPR will include proposed energy conservation standards for the products covered by the rulemaking. Members of the public will have an opportunity to submit written and oral comments on the proposed standards.

Issued in Washington, DC, on February 22, 2010.

Cathy Zoi,

Assistant Secretary, Energy Efficiency and Renewable Energy.

[FR Doc. 2010–6373 Filed 3–23–10; 8:45 am]

BILLING CODE 6450–01–P

Reader Aids

Federal Register

Vol. 75, No. 56

Wednesday, March 24, 2010

CUSTOMER SERVICE AND INFORMATION

Federal Register/Code of Federal Regulations	
General Information, indexes and other finding aids	**202–741–6000**
Laws	**741–6000**
Presidential Documents	
Executive orders and proclamations	**741–6000**
The United States Government Manual	**741–6000**
Other Services	
Electronic and on-line services (voice)	**741–6020**
Privacy Act Compilation	**741–6064**
Public Laws Update Service (numbers, dates, etc.)	**741–6043**
TTY for the deaf-and-hard-of-hearing	**741–6086**

ELECTRONIC RESEARCH

World Wide Web

Full text of the daily Federal Register, CFR and other publications is located at: **http://www.gpoaccess.gov/nara/index.html**

Federal Register information and research tools, including Public Inspection List, indexes, and links to GPO Access are located at: **http://www.archives.gov/federal__register**

E-mail

FEDREGTOC-L (Federal Register Table of Contents LISTSERV) is an open e-mail service that provides subscribers with a digital form of the Federal Register Table of Contents. The digital form of the Federal Register Table of Contents includes HTML and PDF links to the full text of each document.

To join or leave, go to **http://listserv.access.gpo.gov** and select *Online mailing list archives, FEDREGTOC-L, Join or leave the list (or change settings);* then follow the instructions.

PENS (Public Law Electronic Notification Service) is an e-mail service that notifies subscribers of recently enacted laws.

To subscribe, go to **http://listserv.gsa.gov/archives/publaws-l.html** and select *Join or leave the list (or change settings);* then follow the instructions.

FEDREGTOC-L and **PENS** are mailing lists only. We cannot respond to specific inquiries.

Reference questions. Send questions and comments about the Federal Register system to: **fedreg.info@nara.gov**

The Federal Register staff cannot interpret specific documents or regulations.

Reminders. Effective January 1, 2009, the Reminders, including Rules Going Into Effect and Comments Due Next Week, no longer appear in the Reader Aids section of the Federal Register. This information can be found online at **http://www.regulations.gov.**

CFR Checklist. Effective January 1, 2009, the CFR Checklist no longer appears in the Federal Register. This information can be found online at **http://bookstore.gpo.gov/.**

FEDERAL REGISTER PAGES AND DATE, MARCH

9085–9326 1
9327–9514 2
9515–9752 3
9753–10158 4
10159–10408 5
10409–10630 8
10631–10990 9
10991–11418 10
11419–11732 11
11733–12118 12
12119–12432 15
12433–12656 16
12657–12960 17
12961–13214 18
13215–13426 19
13427–13666 22
13667–14068 23
14069–14322 24

CFR PARTS AFFECTED DURING MARCH

At the end of each month, the Office of the Federal Register publishes separately a List of CFR Sections Affected (LSA), which lists parts and sections affected by documents published since the revision date of each title.

3 CFR

Proclamations:
8478 9325
8479 10159
8480 10161
8481 10631
8482 10991
8483 10993
8484 13215

Executive Orders:
13394 (revoked by 13533) 10163
13532 9749
13533 10163
13534 12433

Administrative Orders:
Notices:
Notice of February 26, 2010 10157
Notice of March 10, 2010 12117
Memorandums:
Memorandums of March 10, 2010 ..... 12119, 13427

5 CFR

2423 13429

6 CFR

5 ..... 9085, 10633, 12437

7 CFR

301 12961
354 10634
966 10409
1000 10122
1001 10122
1005 10122
1006 10122
1007 10122
1030 10122
1032 10122
1033 10122
1124 10122
1126 10122
1131 10122
1580 9087

Proposed Rules:
46 11472
319 11071
923 10442
930 12702
932 9536
985 13445
1208 13238
1218 12707
3550 10194

9 CFR

53 10645
56 10645
145 10645
146 10645
147 10645

10 CFR

50 10410
430 13217
431 ..... 10874, 10950
440 11419

Proposed Rules:
73 10444
170 11376
171 11376
430 ..... 12144, 14288, 14319
431 9120

11 CFR

100 13223
106 13223

12 CFR

201 9093
360 12962
617 10411

Proposed Rules:
205 9120
226 12334
230 9126
652 13682
906 10446
1207 10446
1807 12408

13 CFR

301 11733

Proposed Rules:
121 ..... 9129, 10030
124 9129
125 9129
126 9129
127 10030
134 ..... 9129, 10030

14 CFR

1 9095
21 9095
25 12965
26 11734
39 ..... 9515, 9753, 9756, 9760, 10658, 10664, 10667, 10669, 11422, 11428, 11433, 11435, 11439, 12438, 12439, 12441, 12657, 12659, 12661, 12663, 12665, 12667, 12670, 12968, 12971, 13225
43 9095
45 9095
61 9763
63 9763
65 9763
71 ..... 12674, 12675, 12676, 12677, 12678, 12679, 12680,

12972, 12973, 12974, 12975, 13667, 13368, 13669, 13670, 13671
73 ..... 12976, 14069
91 9327
95 10995
97 .... 9095, 9098, 12977, 12979
121 12121
Proposed Rules:
29 11799
35 13238
39 ..... 9137, 9140, 9809, 9811, 9814, 9816, 10694, 10696, 10701, 11072, 12148, 12150, 12152, 12154, 12158, 12464, 12466, 12468, 12710, 12713, 13045, 13046, 13239, 13451, 13682, 13684, 13686, 13689, 13695
71 ..... 9538, 11475, 11476, 11477, 11479, 11480, 11481, 12161, 12162, 12163, 12165, 12166, 13049, 13453, 13697, 13698
234 11075

15 CFR
774 ..... 13672, 13674
902 11441
Proposed Rules:
801 10704
904 13050

16 CFR
610 9726
Proposed Rules:
Ch. I 12715
305 11483
306 12470
322 10707
1450 12167

17 CFR
242 11232
249 9100
270 10060
274 10060

18 CFR
1301 11735
Proposed Rules:
40 ..... 14097, 14103
410 11502

19 CFR
Ch. I 12445
Ch. IV 12445
12 ..... 10411, 13676
163 13676
Proposed Rules:
111 13699
113 9359
159 12483
163 13699
191 9359

20 CFR
655 10396
Proposed Rules:
404 9821
416 9821

21 CFR
3 13678
333 9767
514 10413
520 ..... 10165, 12981
522 ..... 9333, 10165, 13225
524 10165
526 10165
558 ..... 9334, 11451
1140 13225
1301 10671
1303 10671
1304 10671
1307 10671
1308 ..... 10671, 13678
1309 10671
1310 10671
1312 10671
1313 ..... 10168, 10671
1314 10671
1315 10671
1316 10671
1321 10671
Proposed Rules:
1140 13241
1314 13702

22 CFR
Proposed Rules:
22 14111

24 CFR
Proposed Rules:
1000 13243

26 CFR
1 ..... 9101, 10172, 13679
Proposed Rules:
1 ..... 9141, 9142
31 9142
301 9142

27 CFR
Proposed Rules:
9 ..... 9827, 9831
28 9359
44 9359

28 CFR
0 14070
2 9516
43 9102
571 13680
Proposed Rules:
115 11077
513 13705
545 9544

29 CFR
1910 12681
1915 12681
1926 12681
2520 9334
4022 12121
4044 12121
Proposed Rules:
9 13382
1904 10738
1910 ..... 10739, 12485, 12718
1915 ..... 12485, 12718
1926 ..... 12485, 12718
2550 9360

31 CFR
515 ..... 10996, 10997
538 10997
560 10997

32 CFR
706 10413
Proposed Rules:
157 9548
240 9142

33 CFR
117 ..... 9521, 10172, 12686, 12688
165 ..... 10687, 11000, 12688, 13232, 13433, 14072
401 10688
Proposed Rules:
100 13454
117 9557
165 ..... 9370, 10195, 10446, 13707
334 12718

34 CFR
Ch. II 12004
280 9777
Proposed Rules:
206 13814
642 13814
643 13814
644 13814
645 13814
646 13814
647 13814
694 13814

36 CFR
1254 10414
Proposed Rules:
1191 13457
1193 13457
1194 13457

37 CFR
383 14074

38 CFR
Proposed Rules:
3 13051

39 CFR
111 ..... 9343, 12981, 14076
121 9343
310 12123
320 12123
3020 ..... 9523, 11452, 12445

40 CFR
49 10174
52 ..... 9103, 10182, 10415, 10416, 10420, 10690, 11461, 11464, 11738, 12088, 12449, 13436, 14077
55 9780
63 ..... 9648, 10184, 12988
70 9106
80 9107
81 ..... 9781, 13436, 14077
93 14260
98 ..... 12451, 14081
180 ..... 9527, 10186, 11740, 12691, 12695, 14082, 14086
260 12989
261 ..... 11002, 12989
262 12989
263 12989
264 12989
265 12989
266 12989
268 12989
270 12989
271 9345
300 ..... 9782, 9790
450 10438
Proposed Rules:
52 ..... 9146, 9373, 9834, 10198, 10449, 11503, 12090, 12168, 13058, 13468, 13710, 14116
70 9147
81 ..... 12090, 13710
98 12489
131 11079
260 13066
261 13066
262 13066
263 13066
264 13066
265 13066
266 13066
268 13066
270 13066
300 9843

43 CFR
10 12378

44 CFR
64 9111
65 11744
67 ..... 11468, 14091
Proposed Rules:
67 9561

45 CFR
Proposed Rules:
170 11328

46 CFR
Proposed Rules:
10 13715
11 13715
12 13715
15 13715

47 CFR
1 9797
2 10439
15 9113
25 14094
63 13235
73 ..... 9114, 9530, 9797, 10692, 13235, 13236, 13681
74 9113
76 ..... 9692, 12458
80 10692
Proposed Rules:
15 9850
54 10199
64 13471
68 13471
73 ..... 9856, 9859

48 CFR
Ch. 1 ..... 14058, 14067
Ch. 2 14095
1 ..... 13412, 13425
2 14059
9 14059
12 14059
13 13413
14 13425
15 ..... 13414, 13415
16 13416
25 13421
42 14059
52 ..... 13421, 13422, 14059

53 13415
217 ....9114, 10190
237 10191
252 10191
Ch. 13 10568

Proposed Rules:

204 9563
252 9563
1809 9860
1827 9860
1837 9860
1852 9860

49 CFR

40 13009
172 10974
395 13441
541 11005
571 12123

Proposed Rules:

71 9568
172 9147
173 9147
175 9147
389 12720
395 9376
575 ....10740, 11806

50 CFR

10 9282
17 ....11010, 12816
21 ....9314, 9316
223 13012
229 12698
300 13024
600 9531
622 ....9116, 10693, 11068
635 12700
648 ....11441, 12141, 12462
660 11068
679 ....9358, 9534, 10441, 11471, 11749, 11778, 12463, 13237, 13444

Proposed Rules:

16 11808
17 ....9377, 11081, 12598, 13068, 13715, 13717, 13720, 13910
223 12598
224 12598
622 ....9864, 12169
648 10450
660 11829
679 14016

LIST OF PUBLIC LAWS

This is a continuing list of public bills from the current session of Congress which have become Federal laws. It may be used in conjunction with "P L U S" (Public Laws Update Service) on 202–741–6043. This list is also available online at *http://www.archives.gov/federal-register/laws.html*.

The text of laws is not published in the **Federal Register** but may be ordered in "slip law" (individual pamphlet) form from the Superintendent of Documents, U.S. Government Printing Office, Washington, DC 20402 (phone, 202–512–1808). The text will also be made available on the Internet from GPO Access at *http://www.gpoaccess.gov/plaws/index.html*. Some laws may not yet be available.

S. 2968/P.L. 111–146
Trademark Technical and Conforming Amendment Act of 2010 (Mar. 17, 2010; 124 Stat. 66)

H.R. 2847/P.L. 111–147
Hiring Incentives to Restore Employment Act (Mar. 18, 2010; 124 Stat. 71)

Last List March 8, 2010

Public Laws Electronic Notification Service (PENS)

PENS is a free electronic mail notification service of newly enacted public laws. To subscribe, go to *http://listserv.gsa.gov/archives/publaws-l.html*

Note: This service is strictly for E-mail notification of new laws. The text of laws is not available through this service. **PENS** cannot respond to specific inquiries sent to this address.