4–7–10 Wednesday
Vol. 75 No. 66 Apr. 7, 2010

Pages 17555–17846

Federal Register

The **FEDERAL REGISTER** (ISSN 0097–6326) is published daily, Monday through Friday, except official holidays, by the Office of the Federal Register, National Archives and Records Administration, Washington, DC 20408, under the Federal Register Act (44 U.S.C. Ch. 15) and the regulations of the Administrative Committee of the Federal Register (1 CFR Ch. I). The Superintendent of Documents, U.S. Government Printing Office, Washington, DC 20402 is the exclusive distributor of the official edition. Periodicals postage is paid at Washington, DC.

The **FEDERAL REGISTER** provides a uniform system for making available to the public regulations and legal notices issued by Federal agencies. These include Presidential proclamations and Executive Orders, Federal agency documents having general applicability and legal effect, documents required to be published by act of Congress, and other Federal agency documents of public interest.

Documents are on file for public inspection in the Office of the Federal Register the day before they are published, unless the issuing agency requests earlier filing. For a list of documents currently on file for public inspection, see *www.federalregister.gov.*

The seal of the National Archives and Records Administration authenticates the Federal Register as the official serial publication established under the Federal Register Act. Under 44 U.S.C. 1507, the contents of the **Federal Register** shall be judicially noticed.

The **Federal Register** is published in paper and on 24x microfiche. It is also available online at no charge as one of the databases on GPO Access, a service of the U.S. Government Printing Office.

The online edition of the **Federal Register**, *www.gpoaccess.gov/nara,* available through GPO Access, is issued under the authority of the Administrative Committee of the Federal Register as the official legal equivalent of the paper and microfiche editions (44 U.S.C. 4101 and 1 CFR 5.10). It is updated by 6 a.m. each day the **Federal Register** is published and includes both text and graphics from Volume 59, Number 1 (January 2, 1994) forward.

For more information about GPO Access, contact the GPO Access User Support Team, call toll free 1-888-293-6498; DC area 202-512-1530; fax at 202-512-1262; or via e-mail at *gpoaccess@gpo.gov.* The Support Team is available between 7:00 a.m. and 9:00 p.m. Eastern Time, Monday–Friday, except official holidays.

The annual subscription price for the **Federal Register** paper edition is $749 plus postage, or $808, plus postage, for a combined **Federal Register, Federal Register** Index and List of CFR Sections Affected (LSA) subscription; the microfiche edition of the **Federal Register** including the **Federal Register** Index and LSA is $165, plus postage. Six month subscriptions are available for one-half the annual rate. The prevailing postal rates will be applied to orders according to the delivery method requested. The price of a single copy of the daily **Federal Register,** including postage, is based on the number of pages: $11 for an issue containing less than 200 pages; $22 for an issue containing 200 to 400 pages; and $33 for an issue containing more than 400 pages. Single issues of the microfiche edition may be purchased for $3 per copy, including postage. Remit check or money order, made payable to the Superintendent of Documents, or charge to your GPO Deposit Account, VISA, MasterCard, American Express, or Discover. Mail to: U.S. Government Printing Office—New Orders, P.O. Box 979050, St. Louis, MO 63197-9000; or call toll free 1-866-512-1800, DC area 202-512-1800; or go to the U.S. Government Online Bookstore site, see *bookstore.gpo.gov.*

There are no restrictions on the republication of material appearing in the **Federal Register.**

How To Cite This Publication: Use the volume number and the page number. Example: 75 FR 12345.

Postmaster: Send address changes to the Superintendent of Documents, Federal Register, U.S. Government Printing Office, Washington, DC 20402, along with the entire mailing label from the last issue received.

SUBSCRIPTIONS AND COPIES

PUBLIC

Subscriptions:

Paper or fiche	**202–512–1800**
Assistance with public subscriptions	**202–512–1806**
General online information	**202–512–1530; 1–888–293–6498**

Single copies/back copies:

Paper or fiche	**202–512–1800**
Assistance with public single copies	**1–866–512–1800 (Toll-Free)**

FEDERAL AGENCIES

Subscriptions:

Paper or fiche	**202–741–6005**
Assistance with Federal agency subscriptions	**202–741–6005**

Printed on recycled paper.

Contents

Federal Register

Vol. 75, No. 66

Wednesday, April 7, 2010

Agricultural Marketing Service
RULES
Department of Agriculture Civil Monetary Penalties Adjustment, 17555–17561
NOTICES
Agency Information Collection Activities; Proposals, Submissions, and Approvals, 17682–17683

Agriculture Department
See Agricultural Marketing Service
See Commodity Credit Corporation
See Grain Inspection, Packers and Stockyards Administration
RULES
Department of Agriculture Civil Monetary Penalties Adjustment, 17555–17561
NOTICES
Agency Information Collection Activities; Proposals, Submissions, and Approvals, 17681–17682

Centers for Disease Control and Prevention
NOTICES
Meetings:
Board of Scientific Counselors, National Center for Health Statistics, 17754

Coast Guard
RULES
Drawbridge Operation Regulations:
Upper Mississippi River, Rock Island, IL, 17561–17562
Port Access Route Studies:
Approaches to Los Angeles – Long Beach and Santa Barbara Channel, 17562–17564
NOTICES
Certificate of Alternative Compliance:
Lift Boat GARY CHIASSON ELEVATOR, 17754
Offshore Supply Vessel C–ATLAS, 17755
Offshore Supply Vessel GULF TIGER, 17755

Commerce Department
See Foreign-Trade Zones Board
See International Trade Administration
See National Oceanic and Atmospheric Administration

Commodity Credit Corporation
RULES
Department of Agriculture Civil Monetary Penalties Adjustment, 17555–17561
NOTICES
Cooperative Conservation Partnership Initiative:
Chesapeake Bay Watershed, 17683–17690

Department of Transportation
See Pipeline and Hazardous Materials Safety Administration

Employment and Training Administration
NOTICES
Availability of Funds and Solicitation for Grant Applications:
Category 1—Healthcare Virtual Career Platform and Category 2—Enhancing the Ability of Community- and Faith-Based Organizations, etc., 17771–17786

Energy Department
See Energy Information Administration
See Federal Energy Regulatory Commission
NOTICES
Energy Efficient Building Systems Regional Innovation Cluster Initiative:
Joint Federal Funding Opportunity Announcement Information Session II, 17700–17701
Meetings:
Environmental Management Site-Specific Advisory Board Chairs, 17701
High Energy Physics Advisory Panel, 17701

Energy Information Administration
NOTICES
Agency Information Collection Activities; Proposals, Submissions, and Approvals, 17702–17703

Environmental Protection Agency
RULES
Extension of Time-Limited Pesticide Tolerances:
Chlorantraniliprole, 17564–17566
Pesticide Tolerances:
Aminopyralid, 17579–17584
Flutolanil, 17566–17571
Nicosulfuron, 17573–17579
Pendimethalin, 17571–17573
PROPOSED RULES
Reassessment of Use Authorizations:
Polychlorinated Biphenyls (PCBs), 17645–17667
NOTICES
Adequacy Status of Knoxville, TN 1997 PM2.5 Attainment Demonstration Motor Vehicle Emissions Budgets, 17709–17710
Agency Information Collection Activities; Proposals, Submissions, and Approvals, 17710
Agency Information Collection Activities; Proposals, Submissions, and Approvals:
NSPS for Ammonium Sulfate Manufacturing Plants (Renewal), 17711–17712
Cancellation Orders for Amendments to Terminate Uses:
Malathion and Diquat Dibromide, 17712–17713
Receipt of Applications for Emergency Exemptions; Solicitation of Public Comment:
Spirotetramat, 17713–17715
Receipt of Pesticide Petition Filed for Temporary Tolerance Exemption:
Residues of Prohydrojasmon on Red Apple Varieties, 17715–17716
Receipt of Requests to Voluntarily Cancel Certain Pesticide Registrations, 17716–17732
Receipt of Requests to Voluntarily Cancel Pesticide Registrations:
Methidathion, 17735–17737
Monosodium Methanearsonate, 17733–17735
Transfer of Data:
Industrial Economics, Inc., 17737–17738

Executive Office of the President
See Presidential Documents

Federal Aviation Administration
RULES
Amendments to Restricted Area R–2510A:
El Centro, CA, 17561
PROPOSED RULES
Airworthiness Directives:
Bombardier–Rotax GmbH Type 912 F, 912 S, and 914 F Series Reciprocating Engines, 17632–17637
Rolls–Royce plc RB211 Trent 700 and Trent 800 Series Turbofan Engines, 17630–17632
Proposed Amendments of Class E Airspace:
Cherokee, IA, 17637–17638

Federal Communications Commission
RULES
Schools and Libraries Universal Service Support Mechanism, 17584–17590
NOTICES
Privacy Act; Systems of Records, 17738–17741

Federal Deposit Insurance Corporation
NOTICES
Meetings:
FDIC Advisory Committee on Community Banking, 17741–17742

Federal Election Commission
NOTICES
Filing Dates for the Georgia Special Election in the 9th Congressional District, 17742–17743

Federal Energy Regulatory Commission
NOTICES
Combined Notice of Filings, 17703–17706
Complaints:
Flint Hills Resources, LP v. Mid-America Pipeline Co., LLC, 17706
FPL Energy Maine Hydro LLC v. Great Lakes Hydro America LLC et al., 17706
Declaration of Intention and Soliciting Comments, Protests, and/or Motions to Intervene:
Alaska Power & Telephone Co., 17707
Filings:
Arlington Storage Co., LLC, 17707–17708
Request Under Blanket Authorization:
Kinder Morgan Louisiana Pipeline LLC, 17708
Workshops on Penalty Guidelines:
Enforcement of Statutes, Orders, Rules and Regulations, 17708–17709

Federal Highway Administration
NOTICES
Environmental Impact Statements; Availability, etc.:
Gilpin, Clear Creek, and Jefferson Counties, CO; Rescinded, 17826
Meetings:
Motorcyclist Advisory Council to the Federal Highway Administration, 17829–17830

Federal Housing Enterprise Oversight Office
PROPOSED RULES
Equal Access to Justice Act Implementation, 17622–17630

Federal Housing Finance Agency
PROPOSED RULES
Equal Access to Justice Act Implementation, 17622–17630

Federal Maritime Commission
NOTICES
Ocean Transportation Intermediary License; Applicants, 17743
Ocean Transportation Intermediary License; Reissuance, 17743–17744
Ocean Transportation Intermediary License; Revocation, 17744

Federal Reserve System
NOTICES
Change in Bank Control Notices; Acquisition of Shares of Bank or Bank Holding Companies, 17743

Fish and Wildlife Service
PROPOSED RULES
Endangered and Threatened Wildlife and Plants:
12-Month Finding on Petition to Reclassify Delta Smelt from Threatened to Endangered Throughout Its Range, 17667–17680
NOTICES
Agency Information Collection Activities; Proposals, Submissions, and Approvals:
Federal Fish and Wildlife License/Permit Applications and Reports, Migratory Birds, 17757–17758
Approved Recovery Plan for the Scaleshell Mussel, 17758–17760
Endangered and Threatened Wildlife and Plants:
Spectacled Eider (Somateria fischeri): Initiation of 5-Year Status Review, 17760–17761
Environmental Impact Statements; Availability, etc.:
Arctic National Wildlife Refuge, Fairbanks, AK; Comprehensive Conservation Plan, 17763–17765

Foreign-Trade Zones Board
NOTICES
Foreign-Trade Zone 196; Application for Manufacturing Authority:
ATC Logistics & Electronics (Cell Phone Kitting and Distribution), Fort Worth, TX, 17691
Foreign-Trade Zone 196; Application for Temporary/Interim Manufacturing Authority:
ATC Logistics & Electronics (Cell Phone Kitting and Distribution), Fort Worth, TX, 17691–17692
Foreign-Trade Zone 75 — Phoenix, AZ:
Application for Reorganization under Alternative Site Framework, 17692
Foreign-Trade Zone 82; Application for Subzone Authority:
ThyssenKrupp Steel and Stainless USA, LLC, 17692–17693

Grain Inspection, Packers and Stockyards Administration
RULES
Department of Agriculture Civil Monetary Penalties Adjustment, 17555–17561

Health and Human Services Department
See Centers for Disease Control and Prevention
See Indian Health Service
See National Institutes of Health
NOTICES
Meetings:
HIT Policy Committee Advisory, 17744

Homeland Security Department
See Coast Guard

Housing and Urban Development Department
See Federal Housing Enterprise Oversight Office

Indian Health Service
NOTICES
Funding Announcement:
Tribal Management Grant Program, 17745–17754

Interior Department
See Fish and Wildlife Service
See Land Management Bureau
See National Park Service
NOTICES
Environmental Impact Statements; Availability, etc.:
Chattahoochee River National Recreation Area, Georgia; Final General Management Plan, 17756
Meetings:
John H. Chafee Blackstone River Valley National Heritage Corridor Commission, 17756–17757

International Trade Administration
NOTICES
Extension of Time Limit for Preliminary Results of Antidumping Duty Administrative Review:
Stainless Steel Sheet and Strip in Coils from Mexico, 17690–17691
Initiation of Antidumping Duty Administrative Reviews:
Certain Frozen Warmwater Shrimp from Brazil, India, and Thailand, 17693–17699
Quarterly Update to Annual Listing of Foreign Government Subsidies on Articles of Cheese Subject to InQuota Rate of Duty, 17699–17700

International Trade Commission
NOTICES
Investigations:
Certain Products Advertised as Containing Creatine Ethyl Ester, 17769–17770
Glyphosate From China, 17768–17769

Justice Department
NOTICES
Lodging of Consent Decree Under the Comprehensive Environmental Response, Compensation, and Liability Act, 17770

Labor Department
See Employment and Training Administration
NOTICES
Agency Information Collection Activities; Proposals, Submissions, and Approvals:
Jobs for Veterans Act Priority of Service Provisions, 17771

Land Management Bureau
NOTICES
Environmental Impact Statements; Availability, etc.:
Chevron Energy Solutions/Solar Millennium Palen Solar Power Plant, etc., 17765–17766
Solar Millennium's Ridgecrest Solar Power Project, etc., 17762–17763

National Archives and Records Administration
PROPOSED RULES
National Historical Publications and Records Commission Regulations, 17638–17641

National Highway Traffic Safety Administration
RULES
Federal Motor Vehicle Safety Standards:
Roof Crush Resistance, 17590–17618
Roof Crush Resistance; Correcting Amendment, 17604–17605
NOTICES
Grant of Petition for Decision of Inconsequential Noncompliance:
China Manufacturers Alliance, LLC, 17826–17827
Goodyear Tire & Rubber Co., 17827–17828
Michelin North America, Inc., 17828–17829
Receipt of Petition for Decision of Inconsequential Noncompliance:
Continental Tire North America, Inc., 17830–17831
Reports, Forms, and Recordkeeping Requirements, 17831–17832

National Institutes of Health
NOTICES
Agency Information Collection Activities; Proposals, Submissions, and Approvals:
Jackson Heart Study, 17744–17745

National Oceanic and Atmospheric Administration
RULES
Fisheries of the Northeastern United States:
Black Sea Bass Recreational Fishery; Emergency Rule Correction and Extension, 17618–17621

National Park Service
NOTICES
Environmental Impact Statements; Availability, etc.:
General Management Plan for Kings Mountain National Military Park, SC; Termination, 17761–17762
National Park Service Benefits-Sharing, 17763
Special Resource Study for Castle Nugent Farms, St. Croix, U.S. Virgin Islands; Termination, 17765
National Register of Historic Places:
Notification of Pending Nominations and Related Actions, 17767–17768
Weekly Listing of Historic Properties, 17766–17767

National Science Foundation
NOTICES
Meetings; Sunshine Act, 17786

Nuclear Regulatory Commission
NOTICES
Meetings:
ACRS Subcommittee on Power Uprates, 17786–17787

Office of Federal Housing Enterprise Oversight
See Federal Housing Enterprise Oversight Office

Personnel Management Office
NOTICES
Agency Information Collection Activities; Proposals, Submissions, and Approvals, 17787–17788
Privacy Act; Computer Matching Program, 17788–17789

Pipeline and Hazardous Materials Safety Administration
NOTICES
Agency Information Collection Activities; Proposals, Submissions, and Approvals, 17825

Postal Regulatory Commission
NOTICES
Nationwide Change in Frequency of Postal Delivery, 17789–17791

Presidential Documents
PROCLAMATIONS
Special Observances:
Census Day (Proc. 8488), 17835–17838
National Cancer Control Month (Proc. 8489), 17839–17840
National Child Abuse Prevention Month (Proc. 8490), 17841–17842
National Donate Life Month (Proc. 8491), 17843–17844
National Sexual Assault Awareness Month (Proc. 8492), 17845–17846

Securities and Exchange Commission
NOTICES
Applications:
American Vantage Companies, 17796–17798
Medallion Financial Corp., 17794–17796
Pioneer Bond Fund, et al., 17798–17799
Order of Suspension of Trading:
AB Liquidating Corp. (f/k/a Adaptive Broadband Corp.), et al., 17799
Self-Regulatory Organizations; Proposed Rule Changes:
Financial Industry Regulatory Authority, Inc., 17806–17813
NASDAQ OMX BX, Inc., 17802–17803
NASDAQ OMX PHLX, Inc., 17803–17805, 17820–17822
New York Stock Exchange LLC, 17814–17818
NYSE Amex LLC, 17799–17801, 17813–17814, 17818–17820
Options Clearing Corp., 17805–17806

Small Business Administration
NOTICES
Disaster Declarations:
California, 17792–17793
District of Columbia, 17791
Maine, 17792
New Jersey, 17791–17792
North Carolina, 17792
Exemption Under Section 312 of the Small Business Investment Act, Conflicts of Interest:
Gemini Investors IV, L.P., 17793
Meetings:
National Small Business Development Center Advisory Board
National Small Business Development Center Advisory Board, 17793
Region III Regulatory Fairness Board; Public Federal Regulatory Enforcement Fairness Hearing, 17793

State Department
NOTICES
Designation and Determination Pursuant to the Foreign Missions Act, 17822
Meetings:
Cultural Property Advisory Committee, 17823
Shipping Coordinating Committee, 17822–17823
Proposal to Extend the Memorandum of Understanding:
Government of the United States of America and Government of the Republic of Italy; Imposition of Import Restrictions, etc., 17823

Transportation Department
See Federal Aviation Administration
See Federal Highway Administration
See National Highway Traffic Safety Administration
See Pipeline and Hazardous Materials Safety Administration
NOTICES
Passenger Facility Charge Refunds; Interpretation of 49 CFR (Section 158.45), 17823–17825

Treasury Department
See United States Mint

United States Mint
NOTICES
Pricing for 2010 Lincoln One-Cent Coin Two-Roll Set, 17832

Veterans Affairs Department
PROPOSED RULES
Update to NFPA 101, Life Safety Code, for State Home Facilities, 17644–17645
Updating Fire Safety Standards, 17641–17644
NOTICES
Agency Information Collection Activities; Proposals, Submissions, and Approvals:
Monthly Certification of Flight Training, 17832–17833
VA Loan Electronic Reporting Interface (VALERI) System, 17832

Separate Parts In This Issue

Part II
Presidential Documents, 17835–17846

Reader Aids
Consult the Reader Aids section at the end of this page for phone numbers, online resources, finding aids, reminders, and notice of recently enacted public laws.

To subscribe to the Federal Register Table of Contents LISTSERV electronic mailing list, go to http://listserv.access.gpo.gov and select Online mailing list archives, FEDREGTOC-L, Join or leave the list (or change settings); then follow the instructions.

CFR PARTS AFFECTED IN THIS ISSUE

A cumulative list of the parts affected this month can be found in the Reader Aids section at the end of this issue.

3 CFR

Proclamations:

8488 17837
8489 17839
8490 17841
8491 17843
8492 17845

7 CFR

1 17555
3 17555
205 17555
735 17555
800 17555
900 17555
1170 17555
1435 17555

12 CFR

Proposed Rules:

1203 17622
1705 17622

14 CFR

73 17561

Proposed Rules:

39 (2 documents) 17630, 17632
71 17637

33 CFR

117 17561
167 17562

36 CFR

Proposed Rules:

1206 17638

38 CFR

Proposed Rules:

17 17641
51 17644
59 17641

40 CFR

180 (5 documents) 17564, 17566, 17571, 17573, 17579

Proposed Rules:

761 17645

47 CFR

54 17584

49 CFR

571 (3 documents) 17590, 17604, 17605

50 CFR

648 17618

Proposed Rules:

17 17667

Rules and Regulations

Federal Register

Vol. 75, No. 66

Wednesday, April 7, 2010

This section of the FEDERAL REGISTER contains regulatory documents having general applicability and legal effect, most of which are keyed to and codified in the Code of Federal Regulations, which is published under 50 titles pursuant to 44 U.S.C. 1510.

The Code of Federal Regulations is sold by the Superintendent of Documents. Prices of new books are listed in the first FEDERAL REGISTER issue of each week.

DEPARTMENT OF AGRICULTURE

Office of the Secretary

7 CFR Parts 1 and 3

Agricultural Marketing Service

7 CFR Parts 205, 900, and 1170

Grain Inspection, Packers and Stockyards Administration

Farm Service Agency

7 CFR Part 735

7 CFR Part 800

Commodity Credit Corporation

7 CFR Part 1435

RIN 0510–AA03

Department of Agriculture Civil Monetary Penalties Adjustment

AGENCY: Office of the Secretary, Agricultural Marketing Service, Grain Inspection, Packers and Stockyards Administration, Commodity Credit Corporation, USDA.

ACTION: Final rule.

SUMMARY: In accordance with the Federal Civil Penalties Inflation Adjustment Act of 1990, as amended, this final rule adjusts civil monetary penalties imposed by agencies within USDA to incorporate an inflation adjustment.

DATES: *Effective Date:* Effective May 7, 2010.

FOR FURTHER INFORMATION CONTACT: Maureen James, Esq., OGC, USDA, Room 2011–S, 1400 Independence Avenue, SW., Washington, DC 20250–1400, (202) 260–1615.

SUPPLEMENTARY INFORMATION:

I. The Federal Civil Penalties Inflation Adjustment Act of 1990

The Federal Civil Penalties Inflation Adjustment Act of 1990 (28 U.S.C. 2461 note, Pub. L. 101–410) (Act) requires Federal agencies to periodically adjust certain civil monetary penalties (CMPs) for inflation. Under the Act, a CMP is defined as any penalty, fine, or other sanction for which a Federal statute specifies a monetary amount, including a range of minimum and maximum amounts. Each Executive Agency is responsible for adjusting, pursuant to the Act, all CMPs within the agency's jurisdiction. The Act does not apply to any CMP under the Internal Revenue Code of 1986, the Tariff Act of 1930, the Occupational Safety and Health Act of 1970, or the Social Security Act.

The Act requires each Executive Agency to make an initial inflation adjustment for all applicable CMPs not later than 180 days after the enactment of the Debt Collection Improvement Act of 1996 (31 U.S.C. 3701 note, section 31001 of Pub. L. 104–134, 110 Stat. 1321) and subsequent inflation adjustments at least once every 4 years thereafter. USDA published its initial round of inflation adjustments in the **Federal Register** on July 31, 1997, and those adjustments became effective on September 2, 1997 (62 FR 40924). USDA published its second round of inflation adjustments in the **Federal Register** on May 24, 2005, and those adjustments became effective on June 23, 2005 (70 FR 29573). All USDA CMP adjustments are codified in subpart I of part 3 of title 7 of the Code of the Federal Regulations (7 CFR 3.91).

This final rule amends 7 CFR 3.91(b) to reflect the third round of USDA inflation adjustments and 7 CFR 3.91(a)(2) to reflect the new effective date of this rule. This final rule also makes conforming amendments to other agency regulations that currently specify dollar amounts for CMPs that are being adjusted by this final rule.

Method of Calculation

Under the Act, the required inflation adjustment is determined by adjusting each applicable CMP by the "cost of living adjustment" (COLA). The COLA is defined in the Act as the percentage (if any) by which the Consumer Price Index (CPI) for the month of June of the calendar year preceding the adjustment, exceeds the CPI for the month of June of the calendar year in which the amount of such CMP was last set or adjusted pursuant to law. As required by the Act, USDA used the CPI for all urban consumers published by the U.S. Department of Labor. In calculating the COLA, USDA rounded to the nearest tenth.

When USDA first adjusted its CMPs pursuant to the Act in 1997, USDA explained that "[t]he rule contained in this notice reflects the initial adjustment to the listed civil monetary penalties required by the Act" (62 FR 40924; July 31, 1997). USDA continues to interpret the Act such that all listed CMPs undergo the required adjustment whenever USDA adjusts those CMPs by regulation pursuant to the Act and publishes the regulation in the **Federal Register.** In other words, the CMP is considered to have been adjusted even though the dollar amount of the penalty does not increase (a situation that arises due to application of the rounding formulas in section 5(a) of the Act). Thus, all CMPs contained in the final rule are being adjusted pursuant to the Act. USDA believes that this interpretation most accurately reflects the plain language of the statutory text.

For all CMP adjustments in this final rule, USDA used the CPI for the month of June 2008 (218.8) as the numerator CPI. However, USDA used different denominator CPI values depending on the penalty being adjusted:

1. For those CMPs that were last adjusted in 2005, USDA used the CPI for the month of June 2005 (194.5). Nearly all the CMPs being adjusted in this final rule fall into this category.

2. For those CMPs specified in statutory provisions that became effective after the effective date of the last round of USDA CMP adjustments (June 23, 2005), USDA used the CPI for the month of June of the year in which those CMPs were last set in statute. The CMPs in this category are specified in the following 6 subparagraphs of 7 CFR 3.91(b), as amended by this final rule: (1)(lv), (3)(i), (10)(i) parts of (2)(ii), (2)(v) and (2)(vii).

3. For those CMPs specified in statute provisions that were effective prior to June 23, 2005, but were erroneously excluded from the earlier rounds of USDA CMP adjustments, USDA used the CPI for the month of June of the year in which those CMPs were last set in statute. The CMPs in that category are specified in the following 9 subparagraphs of 7 CFR 3.91(b), as amended by this final rule: (1)(liv), (1)(lvi), (9)(i), (10)(ii), (10)(iii), (10)(iv), (10)(v), (11)(i) and (11)(ii).

Limitations on Adjustment—Rounding

The adjustment of these CMPs is limited by six specific rounding formulas set forth in section 5(a) of the Act. Under the Act, raw inflationary increases are rounded to the nearest: (1) Multiple of $10 in the case of penalties less than or equal to $100; (2) multiple of $100 in the case of penalties greater than $100 but less than or equal to $1,000; (3) multiple of $1,000 in the case of penalties greater than $1,000 but less than or equal to $10,000; (4) multiple of $5,000 in the case of penalties greater than $10,000 but less than or equal to $100,000; (5) multiple of $10,000 in the case of penalties greater than $100,000 but less than or equal to $200,000; and (6) multiple of $25,000 in the case of penalties greater than $200,000.

Due to these restrictive rounding rules, not all CMP amounts are being increased in this final rule. For example, the CMP for a violation of the licensing requirements under the Perishable Agricultural Commodities Act has a maximum of $1,200. Making a 2009 cost of living adjustment to this penalty would result in a raw inflationary increase of $120. However, since the penalty is greater than $1,000 but less than $10,000, rounding formula #3 applies. It requires that the $120 increase be rounded to the nearest multiple of $1,000, which is zero. Thus the penalty amount remains unchanged.

Determining which rounding formula to apply depends on the current amount of the CMP, not on the size of the raw inflationary increase. Thus, in the example above, the $120 raw inflationary increase is subject to rounding formula #3 because the amount of that CMP is $1,200.

Limitations on Adjustment—The "10 Percent" Cap on Initial Adjustments

Adjustment of CMPs under the Act is limited in another important respect. The Act specifies that the first adjustment of a CMP may not exceed 10 percent of such penalty. Again, USDA interprets the Act such that the required adjustment takes place each time USDA adjusts its CMPs under the Act via regulation published in the **Federal Register.** Therefore, all CMPs that are currently in 7 CFR 3.91 underwent their initial adjustment and were subject to the 10 percent cap when the first or second round of adjustments became effective, September 2, 1997 or June 23, 2005, respectively.

In this final rule, USDA applied the 10 percent cap only to those CMPs specified in statues that became effective (1) after June 23, 2005; or (2) before June 23, 2005, but were erroneously excluded from the second round of USDA adjustments. The CMPs in these two categories are considered to have undergone their initial adjustment in this final rule, regardless of whether the CMP dollar amounts are being increased.

II. Civil Monetary Penalties Affected by This Rule

Several USDA agencies administer laws that provide for the imposition of CMPs being adjusted by this final rule. Those agencies are: (1) Agricultural Marketing Service; (2) Animal and Plant Health Inspection Service; (3) Food and Nutrition Service; (4) Food Safety and Inspection Service; (5) Forest Service; (6) Grain Inspection, Packers and Stockyards Administration; (7) Federal Crop Insurance Corporation; (8) Rural Housing Service, (9) Farm Service Agency, (10) Commodity Credit Corporation, and (11) Office of the Secretary. The CMPs in this final rule are listed according to the applicable administering agency.

III. Waiver of Proposed Rulemaking

In developing this final rule, we are waiving the usual notice of proposed rulemaking and public comment procedures contained in 5 U.S.C. 553. We have determined that, under 5 U.S.C. 553(b)(3)(B), good cause exists for dispensing with the notice of proposed rulemaking and public comment procedures for this rule. Specifically the rulemaking comports with and is consistent with the statutory authority required by the Federal Civil Penalties Inflation Adjustment Act of 1990, as amended, with no issue of policy discretion. Accordingly, we have determined that opportunity for prior comment is unnecessary and contrary to the public interest, and are issuing this revised regulation as a final rule that will apply to all future cases.

IV. Procedural Requirements

Executive Order 12866

The Office of Management and Budget (OMB) has reviewed this regulatory action in accordance with the provisions of Executive Order 12866, Regulatory Planning and Review, and has determined that it does not meet the criteria for significant regulatory action. As indicated above, the provisions of this final rulemaking contain inflation adjustments in compliance with the Federal Civil Penalties Inflation Adjustment Act of 1990. The great majority of individuals, organizations, and entities affected by this regulation do not engage in prohibited activities and practices, and as a result, we believe that any aggregate economic impact of this revised regulation will be minimal, affecting only those limited few who may engage in prohibited behavior in violation of the statutes.

Regulatory Flexibility Act

The provisions of the Regulatory Flexibility Act relating to an initial and final regulatory flexibility analysis (5 U.S.C. 603, 604) are not applicable to this final rule because USDA was not required to publish notice of proposed rulemaking under 5 U.S.C. 553 or any other law. Accordingly, a regulatory flexibility analysis is not required.

Paperwork Reduction Act

This final rule imposes no new reporting or recordkeeping requirements necessitating clearance by OMB.

List of Subjects in 7 CFR Parts 1, 3, 205, 800, 900, 1170, and 1435

Administrative practice and procedure, Debt management, Penalties.

■ For the reasons set forth in the preamble, amend 7 CFR parts 1, 3, 205, 800, 900, 1170, and 1435 to read as follows:

PART 1—ADMINISTRATIVE REGULATIONS

■ 1. The authority for part 1 continues to read as follows:

Authority: 5 U.S.C. 301, 552; 7 U.S.C. 3125a; 31 U.S.C. 9701; and 7 CFR 2.28(b)(7)(viii).

§ 1.303 [Amended]

■ 2. Amend § 1.303(a)(1)(iv) by removing "$5,000" and adding in its place "the amount specified at § 3.91(b)(11)(i) of this title".

■ 3. Amend § 1.303(b)(1)(ii) by removing "$5,000" and adding in its place "the amount specified at § 3.91(b)(11)(ii) of this title".

PART 3—DEBT MANAGEMENT

Subpart I—Adjusted Civil Monetary Penalties

■ 4. The authority citation for subpart I continues to read as follows:

Authority: 28 U.S.C. 2461 note.

■ 5. In § 3.91, revise paragraphs (a)(2) and (b) to read as follows:

§ 3.91 Adjusted civil monetary penalties.

(a) * * *

(2) Any increase in the dollar amount of a civil monetary penalty listed in paragraph (b) of this section shall apply

only to violations occurring after May 7, 2010.

* * * * *

(b) *Penalties.*

(1) *Agricultural Marketing Service*—

(i) Civil penalty for improper record keeping codified at 7 U.S.C. 136i–1(d), has: a maximum of $750 in the case of the first offense, and a minimum of $1,100 in the case of subsequent offenses, except that the penalty shall be less than $1,100 if the Secretary determines that the person made a good faith effort to comply.

(ii) Civil penalty for a violation of the unfair conduct rule under the Perishable Agricultural Commodities Act, in lieu of license revocation or suspension, codified at 7 U.S.C. 499b(5), has a maximum of $2,200.

(iii) Civil penalty for violation of the licensing requirements under the Perishable Agricultural Commodities Act, codified at 7 U.S.C. 499c(a), has a maximum of $1,200 for each such offense and not more than $350 for each day it continues, or a maximum of $350 for each offense if the Secretary determines the violation was not willful.

(iv) Civil penalty in lieu of license suspension under the Perishable Agricultural Commodities Act, codified at 7 U.S.C. 499h(e), has a maximum penalty of $2,000 for each violative transaction or each day the violation continues.

(v) Civil penalty for a violation of the Export Apple Act, codified at 7 U.S.C. 586, has a minimum of $110 and a maximum of $11,000.

(vi) Civil penalty for a violation of the Export Grape and Plum Act, codified at 7 U.S.C. 596, has a minimum of $110 and a maximum of $11,000.

(vii) Civil penalty for a violation of an order issued by the Secretary under the Agricultural Adjustment Act, reenacted with amendments by the Agricultural Marketing Agreement Act of 1937, codified at 7 U.S.C. 608c(14)(B), has a maximum of $1,100.

(viii) Civil penalty for failure to file certain reports under the Agricultural Adjustment Act, reenacted by the Agricultural Marketing Agreement Act of 1937, codified at 7 U.S.C. 610(c), has a maximum of $110.

(ix) Civil penalty for a violation of a seed program under the Federal Seed Act, codified at 7 U.S.C. 1596(b), has a minimum of $37.50 and a maximum of $750.

(x) Civil penalty for failure to collect any assessment or fee for a violation of the Cotton Research and Promotion Act, codified at 7 U.S.C. 2112(b), has a maximum of $1,100.

(xi) Civil penalty for failure to obey a cease and desist order, or for deceptive marketing, under the Plant Variety Protection Act, codified at 7 U.S.C. 2568(b), has a minimum of $750 and a maximum of $11,000.

(xii) Civil penalty for failure to pay, collect, or remit any assessment or fee for a violation of a program under the Potato Research and Promotion Act, codified at 7 U.S.C. 2621(b)(1), has a minimum of $750 and a maximum of $7,500.

(xiii) Civil penalty for failure to obey a cease and desist order under the Potato Research and Promotion Act, codified at 7 U.S.C. 2621(b)(3), has a maximum of $750.

(xiv) Civil penalty for failure to pay, collect, or remit any assessment or fee or for a violation of a program under the Egg Research and Consumer Information Act, codified at 7 U.S.C. 2714(b)(1), has a minimum of $750 and a maximum of $7,500.

(xv) Civil penalty for failure to obey a cease and desist order under the Egg Research and Consumer Information Act, codified at 7 U.S.C. 2714(b)(3), has a maximum of $750.

(xvi) Civil penalty for failure to remit any assessment or fee or for a violation of a program under the Beef Research and Information Act, codified at 7 U.S.C. 2908(a)(2), has a maximum of $7,500.

(xvii) Civil penalty for failure to remit any assessment or for a violation of a program regarding wheat and wheat foods research, codified at 7 U.S.C. 3410(b), has a maximum of $1,100.

(xviii) Civil penalty for failure to pay, collect, or remit any assessment or fee or for a violation of a program under the Floral Research and Consumer Information Act, codified at 7 U.S.C. 4314(b)(1), has a minimum of $750 and a maximum of $7,500.

(xix) Civil penalty for failure to obey a cease and desist order under the Floral Research and Consumer Information Act, codified at 7 U.S.C. 4314(b)(3), has a maximum of $750.

(xx) Civil penalty for violation of an order under the Dairy Promotion Program, codified at 7 U.S.C. 4510(b), has a maximum of $1,100.

(xxi) Civil penalty for pay, collect, or remit any assessment or fee or for a violation of the Honey Research, Promotion, and Consumer Information Act, codified at 7 U.S.C. 4610(b)(1), has a minimum of $750 and a maximum of $7,500.

(xxii) Civil penalty for failure to obey a cease and desist order under the Honey Research, Promotion, and Consumer Information Act, codified at 7 U.S.C. 4610(b)(3), has a maximum of $750.

(xxiii) Civil penalty for a violation of a program under the Pork Promotion, Research, and Consumer Information Act of 1985, codified at 7 U.S.C. 4815(b)(1)(A)(i), has a maximum of $1,100.

(xxiv) Civil penalty for failure to obey a cease and desist order under the Pork Promotion, Research, and Consumer Information Act of 1985, codified at 7 U.S.C. 4815(b)(3)(A), has a maximum of $750.

(xxv) Civil penalty for failure to pay, collect, or remit any assessment or fee or for a violation of a program under the Watermelon Research and Promotion Act, codified at 7 U.S.C. 4910(b)(1), has a minimum of $750 and a maximum of $7,500.

(xxvi) Civil penalty for failure to obey a cease and desist order under the Watermelon Research and Promotion Act, codified at 7 U.S.C. 4910(b)(3), has a maximum of $750.

(xxvii) Civil penalty for failure to pay, collect, or remit any assessment or fee or for a violation of a program under the Pecan Promotion and Research Act of 1990, codified a 7 U.S.C. 6009(c)(1), has a minimum of $1,100 and a maximum of $11,000.

(xxviii) Civil penalty for failure to obey a cease and desist order under the Pecan Promotion and Research Act of 1990, codified a 7 U.S.C. 6009(e), has a maximum of $1,100.

(xxix) Civil penalty for failure to pay, collect, or remit any assessment or fee or for a violation of a program under the Mushroom Promotion, Research, and Consumer Information Act of 1990, codified at 7 U.S.C. 6107(c)(1), has a minimum of $750 and a maximum of $7,500.

(xxx) Civil penalty for failure to obey a cease and desist order under the Mushroom Promotion, Research, and Consumer Information Act of 1990, codified at 7 U.S.C. 6107(e), has a maximum of $750.

(xxxi) Civil penalty for failure to pay, collect, or remit any assessment or fee or for a violation of the Lime Research, Promotion, and Consumer Information Act of 1990, codified at 7 U.S.C. 6207(c)(1), has a minimum of $750 and a maximum of $7,500.

(xxxii) Civil penalty for failure to obey a cease and desist order under the Lime Research, Promotion, and Consumer Information Act of 1990, codified at 7 U.S.C. 6207(e), has a maximum of $750.

(xxxiii) Civil penalty for failure to pay, collect, or remit any assessment or fee or for a violation of a program under the Soybean Promotion, Research, and Consumer Information Act, codified a 7

U.S.C. 6307(c)(1)(A), has a maximum of $1,100.

(xxxiv) Civil penalty for failure to obey a cease and desist order under the Soybean Promotion, Research, and Consumer Information Act, codified at 7 U.S.C. 6307(e), has a maximum of $7,500.

(xxxv) Civil penalty for failure to pay, collect, or remit any assessment or fee or for a violation of a program under the Fluid Milk Promotion Act of 1990, codified at 7 U.S.C. 6411(c)(1)(A), has a minimum of $750 and a maximum of $7,500, or in the case of a violation that is willful, codified at 7 U.S.C. 6411(c)(1)(B), has a minimum of $11,000 and a maximum of $140,000.

(xxxvi) Civil penalty for failure to obey a cease and desist order under the Fluid Milk Promotion Act of 1990, codified at 7 U.S.C. 6411(e), has a maximum of $7,500.

(xxxvii) Civil penalty for knowingly labeling or selling a product as organic except in accordance with the Organic Foods Production Act of 1990, codified at 7 U.S.C. 6519(a), has a maximum of $11,000.

(xxxviii) Civil penalty for failure to pay, collect, or remit any assessment or fee or for a violation of a program under the Fresh Cut Flowers and Fresh Cut Greens Promotion and Information Act of 1993, codified at 7 U.S.C. 6808(c)(1)(A)(i), has a minimum of $750 and a maximum of $7,500.

(xxxix) Civil penalty for failure to obey a cease and desist order under the Fresh Cut Flowers and Fresh Cut Greens Promotion and Information Act of 1993, codified at 7 U.S.C. 6808(e)(1), has a maximum of $7,500.

(xl) Civil penalty for a violation of a program under the Sheep Promotion, Research, and Information Act of 1994, codified at 7 U.S.C. 7107(c)(1)(A), has a maximum of $1,100.

(xli) Civil penalty for failure to obey a cease and desist order under the Sheep Promotion, Research, and Information Act of 1994, codified at 7 U.S.C. 7107(e), has a maximum of $750.

(xlii) Civil penalty for a violation of an order or regulation issued under the Commodity Promotion, Research, and Information Act of 1996, codified at 7 U.S.C. 7419(c)(1), has a minimum of $1,200 and a maximum of $12,000 for each violation.

(xliii) Civil penalty for failure to obey a cease and desist order under the Commodity Promotion, Research, and Information Act of 1996, codified at 7 U.S.C. 7419(e), has a minimum of $1,200 and a maximum of $12,000 for each day the violation occurs.

(xliv) Civil penalty for a violation of an order or regulation issued under the Canola and Rapeseed Research, Promotion, and Consumer Information Act, codified at 7 U.S.C. 7448(c)(1)(A)(i), has a maximum of $1,200 for each violation.

(xlv) Civil penalty for failure to obey a cease and desist order under the Canola and Rapeseed Research, Promotion, and Consumer Information Act, codified at 7 U.S.C. 7448(e), has a maximum of $7,000 for each day the violation occurs.

(xlvi) Civil penalty for violation of an order or regulation issued under the National Kiwifruit Research, Promotion, and Consumer Information Act, codified at 7 U.S.C. 7468(c)(1), has a minimum of $700 and a maximum of $7,000 for each violation.

(xlvii) Civil penalty for failure to obey a cease and desist order under the National Kiwifruit Research, Promotion, and Consumer Information Act, codified at 7 U.S.C. 7468(e), has a maximum of $700 for each day the violation occurs.

(xlviii) Civil penalty for a violation of an order or regulation under the Popcorn Promotion, Research, and Consumer Information Act, codified at 7 U.S.C. 7487(a), has a maximum of $1,200 for each violation.

(xlix) Civil penalty for certain violations under the Egg Products Inspection Act, codified at 21 U.S.C. 1041(c)(1)(A), has a maximum of $7,500 for each violation.

(l) Civil penalty for violation of an order or regulation issued under the Hass Avocado Promotion, Research, and Information Act of 2000, codified at 7 U.S.C. 7807(c)(1)(A)(i), has a minimum of $1,100 and a maximum of $11,000 for each violation.

(li) Civil penalty for failure to obey a cease and desist order under the Hass Avocado Promotion, Research, and Information Act of 2000, codified at 7 U.S.C. 7807(e)(1), has a maximum of $11,000 for each offense.

(lii) Civil penalty for violation of certain provisions of the Livestock Mandatory Reporting Act of 1999, codified a 7 U.S.C. 1636b(a)(1), has a maximum of $11,000 for each violation.

(liii) Civil penalty for failure to obey a cease and desist order under the Livestock Mandatory Reporting Act of 1999, codified a 7 U.S.C. 1636b(g)(3), has a maximum of $11,000 for each violation.

(liv) Civil penalty for failure to obey an order of the Secretary issued pursuant to the Dairy Product Mandatory Reporting program, codified at 7 U.S.C. 1637b(c)(4)(D)(iii), has a maximum of $11,000 for each offense.

(lv) Civil penalty for a willful violation of the Country of Origin Labeling program by a retailer or person engaged in the business of supplying a covered commodity to a retailer, codified at 7 U.S.C. 1638b(b)(2), has a maximum of $1,000 for each violation.

(lvi) Civil penalty for violations of the Dairy Research Program, codified at 7 U.S.C. 4535 & 4510(b), has a maximum of $1,100 for each violation.

(2) *Animal and Plant Health Inspection Service*—

(i) Civil penalty for a violation of the imported seed provisions of the Federal Seed Act, codified at 7 U.S.C. 1596(b), has a minimum of $37.50 and a maximum of $750.

(ii) Civil penalty for a violation of the Animal Welfare Act, codified at 7 U.S.C. 2149(b), has a maximum of $10,000, and knowing failure to obey a cease and desist order has a civil penalty of $1,650.

(iii) Civil penalty for any person that causes harm to, or interferes with, an animal used for the purposes of official inspection by the Department, codified at 7 U.S.C. 2279e(a), has a maximum of $11,000.

(iv) Civil penalty for a violation of the Swine Health Protection Act, codified at 7 U.S.C. 3805(a), has a maximum of $11,000.

(v) Civil penalty for any person that violates the Plant Protection Act (PPA), or that forges, counterfeits, or, without authority from the Secretary, uses, alters, defaces, or destroys any certificate, permit, or other document provided for in the PPA, codified a 7 U.S.C. 7734(b)(1), has a maximum of the greater of: $60,000 in the case of any individual (except that the civil penalty may not exceed $1,100 in the case of an initial violation of the PPA by an individual moving regulated articles not for monetary gain), $300,000 in the case of any other person for each violation, $500,000 for all violations adjudicated in a single proceeding if the violations do not include a willful violation, and $1,000,000 for all violations adjudicated in a single proceeding if the violations include a willful violation; or twice the gross gain or gross loss for any violation, forgery, counterfeiting, unauthorized use, defacing, or destruction of a certificate, permit, or other document provided for in the PPA that results in the person deriving pecuniary gain or causing pecuniary loss to another.

(vi) Civil penalty for any person [except as provided in 7 U.S.C. 8309(d)] that violates the Animal Health Protection Act (AHPA), or that forges, counterfeits, or, without authority from the Secretary, uses, alters, defaces, or destroys any certificate, permit, or other document provided under the AHPA, codified at 7 U.S.C. 8313(b)(1), has a maximum of the greater of: $60,000 in

the case of any individual, except that the civil penalty may not exceed $1,100 in the case of an initial violation of the AHPA by an individual moving regulated articles not for monetary gain, $300,000 in the case of any other person for each violation, $500,000 for all violations adjudicated in a single proceeding if the violations do not include a willful violation, and $1,000,000 for all violations adjudicated in a single proceeding if the violations include a willful violation; or twice the gross gain or gross loss for any violation, forgery, counterfeiting, unauthorized use, defacing, or destruction of a certificate, permit, or other document provided under the AHPA that results in the person's deriving pecuniary gain or causing pecuniary loss to another person.

(vii) Civil penalty for any person that violates certain regulations under the Agricultural Bioterrorism Protection Act of 2002 regarding transfers of listed agents and toxins or possession and use of listed agents and toxins, codified at 7 U.S.C. 8401(i)(1), has a maximum of $300,000 in the case of an individual and $600,000 in the case of any other person.

(viii) Civil penalty for violation of the Horse Protection Act, codified at 15 U.S.C. 1825(b)(1), has a maximum of $2,200.

(ix) Civil penalty for failure to obey Horse Protection Act disqualification, codified at 15 U.S.C. 1825(c), has a maximum of $4,300.

(x) Civil penalty for knowingly violating, or, if in the business as an importer or exporter, violating, with respect to terrestrial plants, any provision of the Endangered Species Act of 1973, any permit or certificate issued thereunder, or any regulation issued pursuant to section 9(a)(1)(A) through (F), (a)(2)(A) through (D), (c), (d) (other than regulations relating to recordkeeping or filing reports), (f), or (g) of the Endangered Species Act of 1973 (16 U.S.C. 1538(a)(1)(A) through (F), (a)(2)(A) through (D), (c), (d), (f), and (g)), as set forth at 16 U.S.C. 1540(a), has a maximum of $37,500.

(xi) Civil penalty for knowingly violating, or, if in the business as an importer or exporter, violating, with respect to terrestrial plants, any other regulation under the Endangered Species Act of 1973, as set forth at 16 U.S.C. 1540(a), has a maximum of $18,200.

(xii) Civil penalty for violation, with respect to terrestrial plants, of the Endangered Species Act of 1973, or any regulation, permit, or certificate issued thereunder, as set forth at 16 U.S.C. 1540(a), has a maximum of $750.

(xiii) Civil penalty for knowingly and willfully violating 49 U.S.C. 80502 with respect to the transportation of animals by any rail carrier, express carrier, or common carrier (except by air or water), a receiver, trustee, or lessee of one of those carriers, or an owner or master of a vessel, codified at 49 U.S.C. 80502(d), has a minimum of $110 and a maximum of $650.

(3) *Food and Nutrition Service*—

(i) Civil penalty for violating a provision of the Food and Nutrition Act of 2008 (Act), or a regulation under the Act, by a retail food store or wholesale food concern, codified at 7 U.S.C. 2021(a) and (c), has a maximum of $100,000 for each violation.

(ii) Civil penalty for trafficking in food coupons, codified at 7 U.S.C. 2021(b)(3)(B), has a maximum of $32,000 for each violation, except that the maximum penalty for violations occurring during a single investigation is $59,000.

(iii) Civil penalty for the sale of firearms, ammunitions, explosives, or controlled substances for coupons, codified at 7 U.S.C. 2021(b)(3)(C), has a maximum of $32,000 for each violation, except that the maximum penalty for violations occurring during a single investigation is $59,000.

(iv) Civil penalty for any entity that submits a bid to supply infant formula to carry out the Special Supplemental Nutrition Program for Women, Infants and Children and discloses the amount of the bid, rebate or discount practices in advance of the bid opening or for any entity that makes a statement prior to the opening of bids for the purpose of influencing a bid, codified at 42 U.S.C. 1786(h)(8)(H)(i), has a maximum of $145,200,000.

(v) Civil penalty for a vendor convicted of trafficking in food instruments, codified at 42 U.S.C. 1786(o)(1)(A) and 42 U.S.C. 1786(o)(4)(B), has a maximum of $11,000 for each violation, except that the maximum penalty for violations occurring during a single investigation is $49,000.

(vi) Civil penalty for a vendor convicted of selling firearms, ammunition, explosives, or controlled substances in exchange for food instruments, codified at 42 U.S.C. 1786(o)(1)(B) and 42 U.S.C. 1786(o)(4)(B), has a maximum of $11,000 for each violation, except that the maximum penalty for violations occurring during a single investigation is $49,000.

(4) *Food Safety and Inspection Service*—

(i) Civil penalty for certain violations under the Egg Products Inspection Act, codified at 21 U.S.C. 1041(c)(1)(A), has a maximum of $7,500 for each violation.

(ii) Civil penalty for failure to timely file certain reports, codified at 21 U.S.C. 467d, has a maximum of $110 per day for each day the report is not filed.

(iii) Civil penalty for failure to timely file certain reports, codified at 21 U.S.C. 677, has a maximum of $110 per day for each day the report is not filed.

(iv) Civil penalty for failure to timely file certain reports, codified at 21 U.S.C. 1051, has a maximum of $110 per day for each day the report is not filed.

(5) *Forest Service*—

(i) Civil penalty for willful disregard of the prohibition against the export of unprocessed timber originating from Federal lands, codified at 16 U.S.C. 620d(c)(1)(A), has a maximum of $750,000 per violation or three times the gross value of the unprocessed timber, whichever is greater.

(ii) Civil penalty for a violation in disregard of the Forest Resources Conservation and Shortage Relief Act or the regulations that implement such Act regardless of whether such violation caused the export of unprocessed timber originating from Federal lands, codified at 16 U.S.C. 620d(c)(2)(A)(i), has a maximum of $107,500 per violation.

(iii) Civil penalty for a person that should have known that an action was a violation of the Forest Resources Conservation and Shortage Relief Act or the regulations that implement such Act regardless of whether such violation caused the export of unprocessed timber originating from Federal lands, codified at 16 U.S.C. 620d(c)(2)(A)(ii), has a maximum of $70,000 per violation.

(iv) Civil penalty for a willful violation of the Forest Resources Conservation and Shortage Relief Act or the regulations that implement such Act regardless of whether such violation caused the export of unprocessed timber originating from Federal lands, codified at 16 U.S.C. 620d(c)(2)(A)(iii), has a maximum of $725,000.

(v) Civil penalty for a violation involving protections of caves, codified at 16 U.S.C. 4307(a)(2), has a maximum of $11,000.

(6) *Grain Inspection, Packers and Stockyards Administration*—

(i) Civil penalty for a packer or swine contractor violation, codified at 7 U.S.C. 193(b), has a maximum of $11,000.

(ii) Civil penalty for a livestock market agency or dealer failure to register, codified at 7 U.S.C. 203, has a maximum of $750 and not more than $37.50 for each day the violation continues.

(iii) Civil penalty for operating without filing, or in violation of, a stockyard rate schedule, or of a

regulation or order of the Secretary made thereunder, codified at 7 U.S.C. 207(g), has a maximum of $750 and not more than $37.50 for each day the violation continues.

(iv) Civil penalty for a stockyard owner, livestock market agency and dealer violation, codified at 7 U.S.C. 213(b), has a maximum of $11,000.

(v) Civil penalty for a stockyard owner, livestock market agency and dealer compliance order, codified at 7 U.S.C. 215(a), has a maximum of $750.

(vi) Civil penalty for failure to file required reports, codified at 15 U.S.C. 50, has a maximum of $110.

(vii) Civil penalty for live poultry dealer violations, codified at 7 U.S.C. 228b–2(b), has a maximum of $32,000.

(viii) Civil penalty for a violation, codified at 7 U.S.C. 86(c), has a maximum of $107,500.

(7) *Federal Crop Insurance Corporation*—

(i) Civil penalty for any person who willfully and intentionally provides any false or inaccurate information to the Federal Crop Insurance Corporation or to an approved insurance provider with respect to any insurance plan or policy that is offered under the authority of the Federal Crop Insurance Act, codified at 7 U.S.C. 1506(n)(1)(A), has a maximum of $11,000.

(ii) Civil penalty for any person who willfully and intentionally provides any false or inaccurate information to the Federal Crop Insurance Corporation or to an approved insurance provider with respect to any insurance plan or policy that is offered under the authority of the Federal Crop Insurance Act, or who fails to comply with a requirement of the Federal Crop Insurance Corporation, codified at 7 U.S.C. 1515(h)(3)(A), has a maximum of the greater of: the amount of the pecuniary gain obtained as a result of the false or inaccurate information or the noncompliance; or $11,000.

(8) *Rural Housing Service*—

(i) Civil penalty for a violation of section 536 of Title V of the Housing Act of 1949, codified at 42 U.S.C. 1490p(e)(2), has a maximum of $120,000 in the case of an individual, and a maximum of $1,200,000 in the case of an applicant other than an individual.

(ii) Civil penalty for equity skimming under section 543(a) of the Housing Act of 1949, codified at 42 U.S.C. 1490s(a)(2), has a maximum of $32,500.

(iii) Civil penalty under section 543b of the Housing Act of 1949 for a violation of regulations or agreements made in accordance with Title V of the Housing Act of 1949, by submitting false information, submitting false certifications, failing to timely submit information, failing to maintain real property in good repair and condition, failing to provide acceptable management for a project, or failing to comply with applicable civil rights statutes and regulations, codified at 42 U.S.C. 1490s(b)(3)(A), has a maximum of the greater of: twice the damages the Department, guaranteed lender, or project that is secured for a loan under Title V, suffered or would have suffered as a result of the violation; or $60,000 per violation.

(9) *Farm Service Agency*—

(i) Civil penalty for failure to comply with certain provisions of the U.S. Warehouse Act, codified at 7 U.S.C. 254, has a maximum of $27,500 per violation if an agricultural product is not involved in the violation.

(10) *Commodity Credit Corporation*—

(i) Civil penalty for willful failure or refusal to furnish information, or willful furnishing of false information under of section 156 of the Federal Agricultural Improvement and Reform Act of 1996, codified at 7 U.S.C. 7272(g)(5), has a maximum of $10,000 for each violation.

(ii) Civil penalty for willful failure or refusal to furnish information or willful furnishing of false data by a processor, refiner, or importer of sugar, syrup and molasses under section 156 of the Federal Agriculture Improvement and Reform Act of 1996, codified at 7 U.S.C. 7272(g)(5), has a maximum of $10,000 for each violation.

(iii) Civil penalty for filing a false acreage report that exceeds tolerance under section 156 of the Federal Agriculture Improvement and Reform Act of 1996, codified at 7 U.S.C. 7272(g)(5), has a maximum of $10,000 for each violation.

(iv) Civil penalty for knowingly violating any regulation of the Secretary of the Commodity Credit Corporation pertaining to flexible marketing allotments for sugar under section 359h(b) of the Agricultural Adjustment Act of 1938, codified at 7 U.S.C. 1359hh(b), has a maximum of $5,500 for each violation.

(v) Civil penalty for knowing violation of regulations promulgated by the Secretary pertaining to cotton insect eradication under section 104(d) of the Agricultural Act of 1949, codified at 7 U.S.C. 1444a(d), has a maximum of $5,500 for each offense.

(11) *Office of the Secretary*—

(i) Civil penalty for making, presenting, submitting or causing to be made, presented or submitted, a false, fictitious, or fraudulent claim as defined under the Program Fraud Civil Remedies Act of 1986, codified at 31 U.S.C. 3802(a)(1), has a maximum of $5,500.

(ii) Civil penalty for making, presenting, submitting or causing to be made, presented or submitted, a false, fictitious, or fraudulent written statement as defined under the Program Fraud Civil Remedies Act of 1986, codified at 31 U.S.C. 3802(a)(2), has a maximum of $5,500.

PART 205—NATIONAL ORGANIC PROGRAM

■ 6. The authority citation for part 205 continues to read as follows:

Authority: 7 U.S.C. 6501–6522.

§ 205.662 [Amended]

■ 7. Amend § 205.662(g)(1) by removing "$10,000" and adding in its place "the amount specified in § 3.91(b)(1)(xxxvii) of this title".

PART 735—REGULATIONS FOR THE UNITED STATES WAREHOUSE ACT

■ 8. The authority for part 735 continues to read as follows:

Authority: 7 U.S.C. 241 *et seq.*

§ 735.5 [Amended]

■ 9. Amend § 735.5(a) by removing "$25,000" and adding in its place "the amount specified in § 3.91(b)(10)(i) of this title".

PART 800—GENERAL REGULATIONS

■ 10. The authority for part 800 continues to read as follows:

Authority: 7 U.S.C. 71–87k.

§ 800.50 [Amended]

■ 11. Amend § 800.50(d) by removing "$75,000" and adding in its place "the amount specified at § 3.91(b)(6)(viii) of this title".

PART 900—GENERAL REGULATIONS

■ 12. The authority citation for part 900 continues to read as follows:

Authority: 7 U.S.C. 601–674 and 7 U.S.C. 7401.

§ 900.211 [Amended]

■ 13. Amend § 900.211 by removing "$100" and adding in its place "the amount specified at § 3.91(b)(1) (viii) of this title".

PART 1170—DAIRY PRODUCT MANDATORY REPORTING PROGRAM

■ 14. The authority citation for part 1170 continues to read as follows:

Authority: 7 U.S.C. 1637–1637b, as amended by Pub. L. 106–532, 114 Stat. 2541 and Pub. L. 107–171, 116 Stat. 207.

§ 1170.16 [Amended]

■ 15. Amend § 1170.16(c) by removing "$10,000" and adding in its place "the amount specified at § 3.91(b)(1)(liv) of this title".

PART 1435—SUGAR PROGRAM

■ 16. The authority citation for part 1435 continues to read as follows:

Authority: 7 U.S.C. 1359aa–1359jj and 7272 *et seq.;* 15 U.S.C. 714b and 714c.

§ 1435.201 [Amended]

■ 17. Amend § 1435.201(a) by removing "$10,000" and adding in its place "the amount specified at § 3.91(b)(10)(ii) of this title".

§ 1435.318 [Amended]

■ 18. Amend § 1435.318(e) by removing "$10,000" and adding in its place "the amount specified at § 3.91(b)(10)(iii) of this title".

■ 19. Amend § 1435.318(f) by removing "$5,000" and adding in its place "the amount specified at § 3.91(b)(10)(iv) of this title".

Dated: January 12, 2010.

Thomas J. Vilsack,

Secretary, U.S. Department of Agriculture.

Dated: January 26, 2010.

David Shipman,

Associate Administrator, Agricultural Marketing Service.

Dated: February 19, 2010.

J. Dudley Butler,

Administrator, Grain Inspection, Packers and Stockyards Administration.

Dated: February 19, 2010.

Jonathan Coppess,

Administrator, Farm Service Agency.

[FR Doc. 2010–6560 Filed 4–6–10; 8:45 am]

BILLING CODE P

DEPARTMENT OF TRANSPORTATION

Federal Aviation Administration

14 CFR Part 73

[Docket No. FAA–2010–0346; Airspace Docket No. 10–AWP–3]

RIN 2120–AA66

Amendment to Restricted Area R–2510A; El Centro, CA

AGENCY: Federal Aviation Administration (FAA), DOT.

ACTION: Technical amendment.

SUMMARY: In a final rule published in the **Federal Register** on November 9, 1993, an error was made in the airspace description for Restricted Area R–2510A, El Centro, CA. Specifically, the action inadvertently omitted the reference to nautical miles in the boundaries section of the description. This action corrects that error.

DATES: Effective date 0901 UTC, April 7, 2010.

FOR FURTHER INFORMATION CONTACT: Ken McElroy, Airspace and Rules Group, Office of System Operations Airspace and AIM, Federal Aviation Administration, 800 Independence Avenue, SW., Washington, DC 20591; telephone: (202) 267–8783.

SUPPLEMENTARY INFORMATION:

History

On November 9, 1993, the FAA published a final rule in the **Federal Register** (58 FR 27527), Airspace Docket No. 92–AWP–15 entitled "Alteration and Subdivision of Restricted Area R–2510A; El Centro, CA". That action inadvertently omitted the nautical miles reference in the description. The impact of this action was not apparent until recently, when the U.S. Navy requested clarification of the airspace description. Without reference to nautical miles, the description reads in statute miles. However, the FAA's National Aeronautical Navigation Services office currently charts the airspace in nautical miles. Since this is an administrative change and does not affect the boundaries, altitudes, or operating requirements of the airspace, notice and public comment under 5 U.S.C. 553(b) are unnecessary.

List of Subjects in 14 CFR Part 73

Airspace, Prohibited areas, Restricted areas.

Adoption of the Amendment

■ In consideration of the foregoing, the Federal Aviation Administration amends 14 CFR part 73 as follows:

PART 73—SPECIAL USE AIRSPACE

■ 1. The authority citation for part 73 continues to read as follows:

Authority: 49 U.S.C. 106(g), 40103, 40113, 40120; E.O. 10854, 24 FR 9565, 3 CFR, 1959–1963 Comp., p.389.

§ 73.25 [Amended]

■ 2. § 73.25 is amended as follows:

* * * * *

R–2510A El Centro, CA

Boundaries. Beginning at lat. 32°59′35″ N., long. 115°43′33″ W.; to lat. 32°55′35″ N., long. 115°40′18″ W.; to lat. 32°54′04″ N., long. 115°40′18″ W.; thence counterclockwise along a 4.3-NM mile radius circle centered at lat. 32°49′45″ N., long. 115°40′18″ W.; to lat. 32°50′05″ N., long. 115°45′23″ W.; to lat. 32°50′05″ N., long. 115°55′03″ W.; to lat. 32°55′50″ N., long. 115°55′03″ W.; to lat. 33°01′20″ N., long. 116°02′18″ W.; to lat. 33°06′35″ N., long. 115°56′53″ W.; to lat. 33°06′35″ N., long. 115°51′15″ W.; to the point of beginning.

Designated altitudes. Surface to 15,000 feet MSL.

Time of designation. 0700–2300 local time daily; other times by NOTAM at least 24 hours in advance.

Controlling agency. FAA, Los Angeles ARTCC.

Using agency. Commanding Officer, U.S. Navy Fleet Area Control and Surveillance Facility, San Diego, CA.

Issued in Washington, DC, on April 1, 2010.

Ellen Crum,

Acting Manager, Airspace and Rules Group.

[FR Doc. 2010–7802 Filed 4–6–10; 8:45 am]

BILLING CODE 4910–13–P

DEPARTMENT OF HOMELAND SECURITY

Coast Guard

33 CFR Part 117

[Docket Number USCG–2010–0210]

Drawbridge Operation Regulations; Upper Mississippi River, Rock Island, IL

AGENCY: Coast Guard, DHS.

ACTION: Notice of temporary deviation from regulations.

SUMMARY: The Commander, Eighth Coast Guard District, has issued a temporary deviation from the regulation governing the operations of the Rock Island Railroad and Highway Drawbridge across the Upper Mississippi River, Mile 482.9, Rock Island, Illinois. The deviation is necessary to allow the Quad Cities Heart Walkers to cross the bridge. This deviation allows the bridge to be maintained in the closed-to-navigation position for two hours from 8:30 a.m. to 10:30 a.m. on May 15, 2010.

DATES: This deviation is effective from 8:30 a.m. to 10:30 a.m. on May 15, 2010.

ADDRESSES: Documents mentioned in this preamble as being available in the docket are part of docket USCG–2010–0210 and are available online by going to *http://www.regulations.gov,* inserting USCG–2010–0210 in the "Keyword" box and then clicking "Search". They are also available for inspection or copying at the Docket Management Facility (M–30), U.S. Department of Transportation, West Building Ground Floor, Room W12–140, 1200 New Jersey Avenue, SE., Washington, DC 20590, between 9 a.m.

and 5 p.m., Monday through Friday, except Federal holidays.

FOR FURTHER INFORMATION CONTACT: If you have questions on this rule, call or e-mail Roger K. Wiebusch, Bridge Administrator, Coast Guard; telephone (314) 269–2378, e-mail *Roger.K.Wiebusch@uscg.mil.* If you have questions on viewing the docket, call Renee V. Wright, Program Manager, Docket Operations, telephone (202) 366–9826.

SUPPLEMENTARY INFORMATION: The U.S. Army Rock Island Arsenal requested a temporary deviation for the Rock Island Railroad and Highway Drawbridge, across the Upper Mississippi, mile 482.9, at Rock Island, Illinois to remain closed-to-navigation position for a two-hour period while a heart walk is held in the city of Davenport, IA. The Rock Island Railroad and Highway Drawbridge currently operates in accordance with 33 CFR 117.5, which states the general requirement that drawbridges shall open promptly and fully for the passage of vessels when a request to open is given in accordance with the subpart.

There are no alternate routes for vessels transiting this section of the Upper Mississippi River.

The Rock Island Railroad and Highway Drawbridge, in the closed-to-navigation position, provides a vertical clearance of 23.8 feet above normal pool. Navigation on the waterway consists primarily of commercial tows and recreational watercraft. This temporary deviation has been coordinated with waterway users. No objections were received.

In accordance with 33 CFR 117.35(e), the drawbridge must return to its regular operating schedule immediately at the end of the designated time period. This deviation from the operating regulations is authorized under 33 CFR 117.35.

Dated: March 26, 2010.

Roger K. Wiebusch,

Bridge Administrator.

[FR Doc. 2010–7828 Filed 4–6–10; 8:45 am]

BILLING CODE 9110–04–P

DEPARTMENT OF HOMELAND SECURITY

Coast Guard

33 CFR Part 167

[USCG–2009–0765]

Port Access Route Study: In the Approaches to Los Angeles-Long Beach and in the Santa Barbara Channel

AGENCY: Coast Guard, DHS.

ACTION: Notice of study; request for comments.

SUMMARY: The Coast Guard is conducting a Port Access Route Study (PARS) to evaluate the continued applicability of and the need for modifications to current vessel routing in the approaches to Los Angeles-Long Beach and in the Santa Barbara Channel. The goal of the study is to help reduce the risk of marine casualties and increase the efficiency of vessel traffic in the study area. The recommendations of the study may lead to future rulemaking action or appropriate international agreements.

DATES: Comments and related material must either be submitted to our online docket via *http://www.regulations.gov* on or before June 7, 2010 or reach the Docket Management Facility by that date.

ADDRESSES: You may submit comments identified by docket number USCG–2009–0765 using any one of the following methods:

(1) *Federal eRulemaking Portal: http://www.regulations.gov.*

(2) *Fax:* 202–493–2251.

(3) *Mail:* Docket Management Facility (M–30), U.S. Department of Transportation, West Building Ground Floor, Room W12–140, 1200 New Jersey Avenue, SE., Washington, DC 20590–0001.

(4) *Hand delivery:* Same as mail address above, between 9 a.m. and 5 p.m., Monday through Friday, except Federal holidays. The telephone number is 202–366–9329. To avoid duplication, please use only one of these four methods. See the "Public Participation and Request for Comments" portion of the **SUPPLEMENTARY INFORMATION** section below for instructions on submitting comments.

FOR FURTHER INFORMATION CONTACT: If you have questions on this notice of study, call or e-mail Lieutenant Morgan Barbieri, Project Officer, Eleventh Coast Guard District, telephone 510–437–2978; e-mail *Morgan.R.Barbieri@uscg.mil*; or George Detweiler, Office of Waterways Management, Coast Guard, telephone 202–372–1566, e-mail *George.H.Detweiler@uscg.mil.* If you have questions on viewing or submitting material to the docket, call Ms. Renee K. Wright, Program Manager, Docket Operations, telephone 202–366–9826.

SUPPLEMENTARY INFORMATION:

I. Public Participation and Request for Comments

We encourage you to participate in this study by submitting comments and related materials. All comments received will be posted, without change, to *http://www.regulations.gov* and will include any personal information you have provided.

A. Submitting comments: If you submit comments, please include the docket number for this notice (USCG–2009–0765), indicate the specific section of this document to which each comment applies, and provide a reason for each suggestion or recommendation. You may submit your comments and material online, or by fax, mail or hand delivery, but please use only one of these means. We recommend that you include your name and a mailing address, an e-mail address, or a telephone number in the body of your document so that we can contact you if we have questions regarding your submission.

To submit your comment online, go to *http://www.regulations.gov,* click on the "submit a comment" box, which will then become highlighted in blue. In the "Document Type" drop down menu select "Notices" and insert "USCG–2009–0576" in the "Keyword" box. Click "Search" then click on the balloon shape in the "Actions" column. If you submit your comments by mail or hand delivery, submit them in an unbound format, no larger than 8½ by 11 inches, suitable for copying and electronic filing. If you submit them by mail and would like to know that they reached the Facility, please enclose a stamped, self-addressed postcard or envelope. We will consider all comments and material received during the comment period.

B. Viewing the comments and documents: To view comments and documents mentioned in this preamble as being available in the docket, go to *http://www.regulations.gov,* click on the "read comments" box, which will then become highlighted in blue. In the "Keyword" box insert "USCG–2009–0765" and click "Search." Click the "Open Docket Folder" in the "Actions" column. If you do not have access to the Internet, you may view the docket online by visiting the Docket Management Facility in Room W12–140

on the ground floor of the Department of Transportation West Building, 1200 New Jersey Avenue, SE., Washington, DC 20590, between 9 a.m. and 5 p.m., Monday through Friday, except Federal holidays. We have an agreement with the Department of Transportation to use the Docket Management Facility.

C. Privacy Act: Anyone can search the electronic form of comments received into any of our dockets by the name of the individual submitting the comment (or signing the comment, if submitted on behalf of an association, business, labor union, *etc.*). You may review a Privacy Act, system of records notice regarding our public dockets in the January 17, 2008, issue of the **Federal Register** (73 FR 3316).

II. Definitions

The following definitions (except "Regulated Navigation Area") are from the International Maritime Organization's (IMO's) publication "Ships' Routeing" and should help you review this notice:

Area to be avoided (*ATBA*) means a routing measure comprising an area within defined limits in which either navigation is particularly hazardous or it is exceptionally important to avoid casualties and which should be avoided by all vessels, or certain classes of vessels.

Deep-water route means a route within defined limits, which has been accurately surveyed for clearance of sea bottom and submerged obstacles as indicated on nautical charts.

Inshore traffic zone means a routing measure comprising a designated area between the landward boundary of a traffic separation scheme and the adjacent coast, to be used in accordance with the provisions of Rule 10(d), as amended, of the International Regulations for Preventing Collisions at Sea, 1972 (COLREGS).

Precautionary area means a routing measure comprising an area within defined limits where vessels must navigate with particular caution and within which the direction of traffic flow may be recommended.

Recommended route means a route of undefined width, for the convenience of vessels in transit, which is often marked by centerline buoys.

Recommended track is a route which has been specially examined to ensure so far as possible that it is free of dangers and along which vessels are advised to navigate.

Regulated Navigation Area (RNA) means a water area within a defined boundary for which regulations for vessels navigating within the area have been established under 33 CFR part 165.

Roundabout means a routing measure comprising a separation point or circular separation zone and a circular traffic lane within defined limits. Traffic within the roundabout is separated by moving in a counterclockwise direction around the separation point or zone.

Separation Zone or *separation line* means a zone or line separating the traffic lanes which vessels are proceeding in opposite or nearly opposite directions; or from the adjacent sea area; or separating traffic lanes designated for particular classes of vessels proceeding in the same direction.

Traffic lane means an area within defined limits in which one-way traffic is established. Natural obstacles, including those forming separation zones, may constitute a boundary.

Traffic Separation Scheme (TSS) means a routing measure aimed at the separation of opposing streams of traffic by appropriate means and by the establishment of traffic lanes.

Two-way route means a route within defined limits inside which two-way traffic is established, aimed at providing safe passage of ships through waters where navigation is difficult or dangerous.

Vessel routing system means any system of one or more routes or routing measure aimed at reducing the risk of casualties; it includes traffic separation schemes, two-way routes, recommended tracks, areas to be avoided, no anchoring areas, inshore traffic zones, roundabouts, precautionary areas, and deep-water routes.

III. Background and Purpose

A. Requirement for port access route studies: Under the Ports and Waterways Safety Act (PWSA) (33 U.S.C. 1223(C)), the Commandant of the Coast Guard may designate necessary fairways and traffic separation schemes (TSSs) to provide safe access routes for vessels proceeding to and from United States ports. The designation of fairways and TSSs recognizes the paramount right of navigation over all other uses in the designated areas.

The PWSA requires the Coast Guard to conduct a study of potential traffic density and the need for safe access routes for vessels before establishing or adjusting fairways or TSSs. Through the study process, we must coordinate with Federal, State, and foreign State agencies (as appropriate) and consider the views of maritime community representatives, environmental groups, and other interested stakeholders. A primary purpose of this coordination is, to the extent practicable, to reconcile the need for safe access routes with other reasonable waterway uses.

B. Previous port access route studies: From 1993 through 1996, the Coast Guard conducted a port access route study to analyze vessel routing measures in the approaches to California ports. We published the study results in the **Federal Register** on October 25, 1996 (61 FR 55248). The study recommended shifting the southern approach lanes of the existing TSS off San Francisco westward (seaward) and extending the existing TSS in the Santa Barbara Channel from Point Conception to Point Arguello. The study concluded that no changes to the TSS in the approaches to Los Angeles-Long Beach were necessary at that time.

In 1995, the Ports of Los Angeles and Long Beach initiated major port improvement projects. These projects are completed and included the following:

Lengthening of the Los Angeles Approach Channel to extend approximately 3.5 nautical miles beyond the Los Angeles breakwater.

Deepening of the Los Angeles Approach Channel to a project depth of 81 feet.

A slight shift of the Long Beach Approach to a 355 deg. True inbound course.

Deepening of the Long Beach Approach Channel to a project depth of 69 feet.

The Coast Guard published a notice of study in the **Federal Register** (64 FR 12139, March 11, 1999) which announced that we would conduct a PARS for the approaches to Los Angeles-Long Beach. The Coast Guard published a notice of study results in the **Federal Register** on May 19, 2000 (65 FR 31856). The PARS evaluated the potential effects of the port improvement projects on navigational safety and vessel traffic management efficiency. It concluded that modifications to the TSS in the approaches to Los Angeles-Long Beach and the Precautionary Area were necessary for the safety of the maritime community utilizing the Ports of Los Angeles and Long Beach.

C. Necessity for a new port access route study: The Coast Guard is always seeking ways to enhance the safety of life at sea. Increased vessel traffic has been observed bypassing the Santa Barbara Channel TSS and opting for routes south of San Miguel, Santa Rosa and Santa Cruz Islands approaching the San Pedro Channel. Vessels, which have traditionally utilized the established TSS in the Santa Barbara Channel to access ports in Los Angeles-Long Beach, have recently shifted to transit in the

area south of San Miguel, Santa Rosa and Santa Cruz Islands.

The Coast Guard has identified a potential safety enhancement by increasing predictability of vessel traffic patterns in this area with an established vessel routing system. When vessels follow predictable and charted routing measures such as a TSS, congestion may be reduced, and mariners may be better able to predict where vessel interactions may occur and act accordingly.

This study will assess whether the creation of a vessel routing system is necessary to increase the predictability of vessel movements, which may decrease the potential for collisions, oil spills, and other events that could threaten the marine environment.

IV. Timeline, Study Area, and Process of This PARS

The Eleventh Coast Guard District will conduct this PARS. The study will begin upon publication of this notice and should take 6 to 12 months to complete.

The study area will be the area with a northern boundary at 34°30′ N; a western boundary 121°00′ W; a southern boundary at 33°15′ N; and an eastern boundary along the shoreline. This area encompasses the TSSs in the Santa Barbara Channel and in the approaches to Los Angeles-Long Beach and the approach to the San Pedro Channel from the Pacific Ocean, particularly the area south of San Miguel, Santa Rosa and Santa Cruz Islands and north of San Nicholas, Santa Barbara, and Santa Catalina Islands where an increase in vessel traffic has been identified.

As part of this study, we will analyze vessel traffic density, agency and stakeholder experience in vessel traffic management, navigation, ship handling, and effects of weather. We encourage you to participate in the study process by submitting comments in response to this notice.

We will publish the results of the PARS in the **Federal Register**. It is possible that the study may validate existing vessel routing measures and conclude that no changes are necessary. It is also possible that the study may recommend one or more changes to enhance navigational safety and the efficiency of vessel traffic management. The recommendations may lead to future rulemakings or appropriate international agreements.

Possible Scope of the Recommendations

We are attempting to determine the scope of any safety problems associated with vessel transits in the study area. We expect that information gathered during the study will help us identify any problems and appropriate solutions. The study may recommend that we—

- Maintain the current vessel routing measures,
- Modify the existing traffic separations schemes;
- Create one or more precautionary areas;
- Create one or more inshore traffic zones;
- Establish area(s) to be avoided;
- Create deep-draft routes;
- Establish a regulated navigation Area (RNA) with specific vessel operating requirements to ensure safe navigation near shallow water; and
- Identify any other appropriate ships' routing measures.

Questions

To help us conduct the port access route study, we request information that will help answer the following questions, although comments on other issues addressed in this notice are also welcome. In responding to a question, please explain your reasons for each answer and follow the instructions under "Public Participation and Request for Comments" above.

1. What navigational hazards do vessels operating in the study area face? Please describe.

2. Are there strains on the current vessel routing system, such as increasing traffic density? Please describe.

3. Are modifications to existing vessel routing measures needed to improve traffic management efficiency in the study area? If so, please describe.

4. What costs and benefits are associated with the potential study recommendations listed above? What measures do you think are most cost-effective?

5. What impacts, both positive and negative, would changes to existing vessel routing measures or establishing new routing measures have on the study area?

This notice is issued under authority of 33 U.S.C. 1223(c) and 5 U.S.C. 552.

Dated: March 11, 2010.

J.R. Castillo,

Rear Admiral, U.S. Coast Guard, Commander, Eleventh Coast Guard District.

[FR Doc. 2010–7815 Filed 4–6–10; 8:45 am]

BILLING CODE 9110–04–P

ENVIRONMENTAL PROTECTION AGENCY

40 CFR Part 180

[EPA–HQ–OPP–2008–0770; FRL–8820–3]

Chlorantraniliprole; Extension of Time-Limited Pesticide Tolerances

AGENCY: Environmental Protection Agency (EPA).

ACTION: Final rule.

SUMMARY: This regulation extends the time-limited tolerances for indirect or inadvertent residues of the insecticide chlorantraniliprole (3-bromo-N–[4-chloro-2-methyl-6-[(methylamino)carbonyl]phenyl]-1-(3-chloro-2-pyridinyl)-1H-pyrazole-5-carboxamide) in or on grain, cereal, forage, fodder, and straw, group 16; leek; onion, green; onion, Welsh; peanut, hay; shallot; soybean, forage; soybean, hay; and vegetable, leaves of root and tuber, group 2 at 0.20 parts per million (ppm). The current tolerances are set to expire on April 10, 2010. This rule extends the expiration/revocation date of these time-limited tolerances for an additional 4–year period, to April 10, 2014.

DATES: This regulation is effective April 7, 2010. Objections and requests for hearings must be received on or before June 7, 2010, and must be filed in accordance with the instructions provided in 40 CFR part 178 (see also Unit I.C. of the **SUPPLEMENTARY INFORMATION**).

ADDRESSES: EPA has established a docket for this action under docket identification (ID) number EPA–HQ–OPP–2008–0770. All documents in the docket are listed in the docket index available at *http://www.regulations.gov*. Although listed in the index, some information is not publicly available, e.g., Confidential Business Information (CBI) or other information whose disclosure is restricted by statute. Certain other material, such as copyrighted material, is not placed on the Internet and will be publicly available only in hard copy form. Publicly available docket materials are available in the electronic docket at *http://www.regulations.gov*, or, if only available in hard copy, at the OPP Regulatory Public Docket in Rm. S–4400, One Potomac Yard (South Bldg.), 2777 S. Crystal Dr., Arlington, VA. The Docket Facility is open from 8:30 a.m. to 4 p.m., Monday through Friday, excluding legal holidays. The Docket Facility telephone number is (703) 305–5805.

FOR FURTHER INFORMATION CONTACT: Julie Chao, Registration Division (7505P), Office of Pesticide Programs, Environmental Protection Agency, 1200 Pennsylvania Ave., NW., Washington, DC 20460–0001; telephone number: (703) 308–8735; e-mail address: *chao.julie@epa.gov*.

SUPPLEMENTARY INFORMATION:

I. General Information

A. Does this Action Apply to Me?

You may be potentially affected by this action if you are an agricultural producer, food manufacturer, or pesticide manufacturer. Potentially affected entities may include, but are not limited to:

- Crop production (NAICS code 111).
- Animal production (NAICS code 112).
- Food manufacturing (NAICS code 311).
- Pesticide manufacturing (NAICS code 32532).

This listing is not intended to be exhaustive, but rather provides a guide for readers regarding entities likely to be affected by this action. Other types of entities not listed in this unit could also be affected. The North American Industrial Classification System (NAICS) codes have been provided to assist you and others in determining whether this action might apply to certain entities. If you have any questions regarding the applicability of this action to a particular entity, consult the person listed under **FOR FURTHER INFORMATION CONTACT**.

B. How Can I Get Electronic Access to Other Related Information?

You may access a frequently updated electronic version of 40 CFR part 180 through the Government Printing Office's e-CFR site at *http://www.gpoaccess.gov/ecfr*.

C. Can I File an Objection or Hearing Request?

Under section 408(g) of Federal Food, Drug, and Cosmetic Act (FFDCA), 21 U.S.C. 346a, any person may file an objection to any aspect of this regulation and may also request a hearing on those objections. The EPA procedural regulations which govern the submission of objections and requests for hearings appear in 40 CFR part 178. You must file your objection or request a hearing on this regulation in accordance with the instructions provided in 40 CFR part 178. To ensure proper receipt by EPA, you must identify docket ID number EPA–HQ–OPP–2008–0770 in the subject line on the first page of your submission. All requests must be in writing, and must be mailed or delivered to the Hearing Clerk on or before June 7, 2010.

In addition to filing an objection or hearing request with the Hearing Clerk as described in 40 CFR part 178, please submit a copy of the filing that does not contain any CBI for inclusion in the public docket that is described in **ADDRESSES**. Information not marked confidential pursuant to 40 CFR part 2 may be disclosed publicly by EPA without prior notice. Submit your copies, identified by docket ID number EPA–HQ–OPP–2008–0770, by one of the following methods:

- *Federal eRulemaking Portal*: *http://www.regulations.gov*. Follow the on-line instructions for submitting comments.
- *Mail*: Office of Pesticide Programs (OPP) Regulatory Public Docket (7502P), Environmental Protection Agency, 1200 Pennsylvania Ave., NW., Washington, DC 20460–0001.
- *Delivery*: OPP Regulatory Public Docket (7502P), Environmental Protection Agency, Rm. S–4400, One Potomac Yard (South Bldg.), 2777 S. Crystal Dr., Arlington, VA. Deliveries are only accepted during the Docket Facility's normal hours of operation (8:30 a.m. to 4 p.m., Monday through Friday, excluding legal holidays). Special arrangements should be made for deliveries of boxed information. The Docket Facility telephone number is (703) 305–5805.

II. Background and Statutory Findings

In a final rule published in the **Federal Register** of June 26, 2009 (74 FR 30470) (FRL–8413–6), EPA amended 40 CFR 180.628 by establishing time-limited tolerances for indirect or inadvertent residues of chlorantraniliprole in or on cowpea, forage and hay at 0.20 ppm; field pea, vines and hay at 0.20 ppm; cereal grain, forage, fodder and straw, crop group 16 at 0.20 ppm; grass, forage, fodder and hay, crop group 17 at 0.20 ppm; vegetable, leaves of root and tuber, crop group 2 at 0.20 ppm; leek at 0.20 ppm; nongrass animal feed, forage, fodder, straw and hay, crop group 18 at 0.20 ppm; okra at 0.70 ppm; onion, green at 0.20 ppm; onion, welsh at 0.20 ppm; peanut, hay at 0.20 ppm; shallot at 0.20 ppm; soybean, forage and hay at 0.20 ppm; strawberry at 1.2 ppm; and sugarcane, sugar at 0.20 ppm, with an expiration date of April 10, 2010.

In the **Federal Register** of February 3, 2010 (75 FR 5526) (FRL–8809–3), permanent tolerances were established for various commodities and crop groups, including vegetables, foliage of legume, except soybean, crop group 7A, forage and hay (includes cowpea, forage and hay; field pea, vines and hay); grass, forage, fodder and hay, crop group 17; okra; strawberry; and sugarcane, cane and molasses. Therefore, the previously established time-limited tolerances for cowpea, forage and hay; field pea, vines and hay; grass, forage, fodder and hay, crop group 17; okra; strawberry; and sugarcane were deleted.

The Agency, acting on its own initiative, is extending the current remaining time-limited tolerances for indirect or inadvertent residues of chlorantraniliprole in or on cereal grain, forage, fodder, and straw, crop group 16 at 0.20 ppm; leek at 0.20 ppm; onion, green at 0.20 ppm; onion, welsh at 0.20 ppm; peanut, hay at 0.20 ppm; shallot at 0.20 ppm; soybean, forage and soybean, hay at 0.20 ppm; and vegetable, leaves of root and tuber, crop group 2 at 0.20 ppm. The current tolerances are set to expire on April 10, 2010. This rule extends the expiration/revocation date of these time-limited tolerances for an additional 4–year period, to April 10, 2014. This extension will provide additional time for the registrant to submit data to support permanent tolerances on these commodities.

III. Statutory and Executive Order Reviews

This final rule establishes a tolerance under section 408(d) of FFDCA in response to a petition submitted to the Agency. The Office of Management and Budget (OMB) has exempted these types of actions from review under Executive Order 12866, entitled *Regulatory Planning and Review* (58 FR 51735, October 4, 1993). Because this final rule has been exempted from review under Executive Order 12866, this final rule is not subject to Executive Order 13211, entitled *Actions Concerning Regulations That Significantly Affect Energy Supply, Distribution, or Use* (66 FR 28355, May 22, 2001) or Executive Order 13045, entitled *Protection of Children from Environmental Health Risks and Safety Risks* (62 FR 19885, April 23, 1997). This final rule does not contain any information collections subject to OMB approval under the Paperwork Reduction Act (PRA), 44 U.S.C. 3501 *et seq.*, nor does it require any special considerations under Executive Order 12898, entitled *Federal Actions to Address Environmental Justice in Minority Populations and Low-Income Populations* (59 FR 7629, February 16, 1994).

Since tolerances and exemptions that are established on the basis of a petition under section 408(d) of FFDCA, such as the tolerances in this final rule, do not require the issuance of a proposed rule,

the requirements of the Regulatory Flexibility Act (RFA) (5 U.S.C. 601 *et seq.*) do not apply.

This final rule directly regulates growers, food processors, food handlers, and food retailers, not States or tribes, nor does this action alter the relationships or distribution of power and responsibilities established by Congress in the preemption provisions of section 408(n)(4) of FFDCA. As such, the Agency has determined that this action will not have a substantial direct effect on States or tribal governments, on the relationship between the national government and the States or tribal governments, or on the distribution of power and responsibilities among the various levels of government or between the Federal Government and Indian tribes. Thus, the Agency has determined that Executive Order 13132, entitled *Federalism* (64 FR 43255, August 10, 1999) and Executive Order 13175, entitled *Consultation and Coordination with Indian Tribal Governments* (65 FR 67249, November 9, 2000) do not apply to this final rule. In addition, this final rule does not impose any enforceable duty or contain any unfunded mandate as described under Title II of the Unfunded Mandates Reform Act of 1995 (UMRA) (Public Law 104–4).

This action does not involve any technical standards that would require Agency consideration of voluntary consensus standards pursuant to section 12(d) of the National Technology Transfer and Advancement Act of 1995 (NTTAA), Public Law 104–113, section 12(d) (15 U.S.C. 272 note).

IV. Congressional Review Act

The Congressional Review Act, 5 U.S.C. 801 *et seq.*, generally provides that before a rule may take effect, the agency promulgating the rule must submit a rule report to each House of the Congress and to the Comptroller General of the United States. EPA will submit a report containing this rule and other required information to the U.S. Senate, the U.S. House of Representatives, and the Comptroller General of the United States prior to publication of this final rule in the **Federal Register**. This final rule is not a "major rule" as defined by 5 U.S.C. 804(2).

List of Subjects in 40 CFR Part 180

Environmental protection, Administrative practice and procedure, Agricultural commodities, Pesticides and pests, Reporting and recordkeeping requirements.

Dated: March 26, 2010.

Lois Rossi,

Director, Registration Division, Office of Pesticide Programs.

■ Therefore, 40 CFR chapter I is amended as follows:

PART 180—[AMENDED]

■ 1. The authority citation for part 180 continues to read as follows:

Authority: 21 U.S.C. 321(q), 346a and 371.

§ 180.628 [Amended]

■ 2. In § 180.628, amend the table in paragraph (d) by revising the expiration/revocation dates "4/10/10" to read "4/10/14," each time it appears.

[FR Doc. 2010–7744 Filed 4–6–10; 8:45 am]

BILLING CODE 6560–50–S

ENVIRONMENTAL PROTECTION AGENCY

40 CFR Part 180

[EPA–HQ–OPP–2009–0553; FRL–8817–9]

Flutolanil; Pesticide Tolerances

AGENCY: Environmental Protection Agency (EPA).

ACTION: Final rule.

SUMMARY: This regulation establishes tolerances for residues of flutolanil in or on cotton and soybean. Nichino America, Inc. requested these tolerances under the Federal Food, Drug, and Cosmetic Act (FFDCA).

DATES: This regulation is effective April 7, 2010. Objections and requests for hearings must be received on or before June 7, 2010, and must be filed in accordance with the instructions provided in 40 CFR part 178 (see also Unit I.C. of the **SUPPLEMENTARY INFORMATION**).

ADDRESSES: EPA has established a docket for this action under docket identification (ID) number EPA–HQ–OPP–2009–0553. All documents in the docket are listed in the docket index available at *http://www.regulations.gov*. Although listed in the index, some information is not publicly available, e.g., Confidential Business Information (CBI) or other information whose disclosure is restricted by statute. Certain other material, such as copyrighted material, is not placed on the Internet and will be publicly available only in hard copy form. Publicly available docket materials are available in the electronic docket at *http://www.regulations.gov*, or, if only available in hard copy, at the OPP Regulatory Public Docket in Rm. S–4400, One Potomac Yard (South Bldg.), 2777 S. Crystal Dr., Arlington, VA. The Docket Facility is open from 8:30 a.m. to 4 p.m., Monday through Friday, excluding legal holidays. The Docket Facility telephone number is (703) 305–5805.

FOR FURTHER INFORMATION CONTACT: Lisa Jones, Registration Division, Office of Pesticide Programs, Environmental Protection Agency, 1200 Pennsylvania Ave., NW., Washington, DC 20460–0001; telephone number: (703) 308–9424; e-mail address: *jones.lisa@epa.gov*.

SUPPLEMENTARY INFORMATION:

I. General Information

A. Does this Action Apply to Me?

You may be potentially affected by this action if you are an agricultural producer, food manufacturer, or pesticide manufacturer. Potentially affected entities may include, but are not limited to those engaged in the following activities:

- Crop production (NAICS code 111).
- Animal production (NAICS code 112).
- Food manufacturing (NAICS code 311).
- Pesticide manufacturing (NAICS code 32532).

This listing is not intended to be exhaustive, but rather to provide a guide for readers regarding entities likely to be affected by this action. Other types of entities not listed in this unit could also be affected. The North American Industrial Classification System (NAICS) codes have been provided to assist you and others in determining whether this action might apply to certain entities. If you have any questions regarding the applicability of this action to a particular entity, consult the person listed under **FOR FURTHER INFORMATION CONTACT**.

B. How Can I Get Electronic Access to Other Related Information?

You may access a frequently updated electronic version of EPA's tolerance regulations at 40 CFR part 180 through the Government Printing Office's e-CFR cite at *http://www.gpoaccess.gov/ecfr*. To access the OPPTS harmonized test guidelines referenced in this document electronically, please go *http://www.epa.gov/oppts* and select "Test Methods and Guidelines."

C. Can I File an Objection or Hearing Request?

Under section 408(g) of FFDCA, 21 U.S.C. 346a, any person may file an objection to any aspect of this regulation and may also request a hearing on those

objections. You must file your objection or request a hearing on this regulation in accordance with the instructions provided in 40 CFR part 178. To ensure proper receipt by EPA, you must identify docket ID number EPA–HQ–OPP–2009–0553 in the subject line on the first page of your submission. All objections and requests for a hearing must be in writing, and must be received by the Hearing Clerk on or before June 7, 2010. Addresses for mail and hand delivery of objections and hearing requests are provided in 40 CFR 178.25(b).

In addition to filing an objection or hearing request with the Hearing Clerk as described in 40 CFR part 178, please submit a copy of the filing that does not contain any CBI for inclusion in the public docket that is described in **ADDRESSES**. Information not marked confidential pursuant to 40 CFR part 2 may be disclosed publicly by EPA without prior notice. Submit this copy, identified by docket ID number EPA–HQ–OPP–2009–0553, by one of the following methods:

• *Federal eRulemaking Portal*: *http://www.regulations.gov*. Follow the on-line instructions for submitting comments.

• *Mail*: Office of Pesticide Programs (OPP) Regulatory Public Docket (7502P), Environmental Protection Agency, 1200 Pennsylvania Ave., NW., Washington, DC 20460–0001.

• *Delivery*: OPP Regulatory Public Docket (7502P), Environmental Protection Agency, Rm. S–4400, One Potomac Yard (South Bldg.), 2777 S. Crystal Dr., Arlington, VA. Deliveries are only accepted during the Docket Facility's normal hours of operation (8:30 a.m. to 4 p.m., Monday through Friday, excluding legal holidays). Special arrangements should be made for deliveries of boxed information. The Docket Facility telephone number is (703) 305–5805.

II. Petition for Tolerance

In the **Federal Register** of September 4, 2009 (74 FR 45848) (FRL–8434–4), EPA issued a notice pursuant to section 408(d)(3) of FFDCA, 21 U.S.C. 346a(d)(3), announcing the filing of a pesticide petition (PP 9F7542) by Nichino America, Inc., 4550 New Linden Hill Rd., Suite 501, Wilmington, DE 19808. The petition requested that 40 CFR 180.484 be amended by establishing tolerances for residues of the fungicide flutolanil, (*N*-(3-(1-methylethoxy) phenyl) -2-(trifluoromethyl) benzamide) and its metabolite, M-4, desisopropylflutolanil (*N*-(3-hydroxyphenyl)-2-(trifluromethyl) benzamide), expressed as 2-trifluoromethyl benzoic acid and calculated as flutolanil, in or on cotton at 0.05 parts per million (ppm) and in or on soybean at 0.05 ppm. That notice referenced a summary of the petition prepared by Nichino America, Inc., the registrant, which is available to the public in the docket, *http://www.regulations.gov*. Comments were received on the notice of filing. EPA's response to these comments is discussed in Unit IV.C.

EPA has modified the proposed tolerance expression to: "residues of flutolanil, (*N*-(3-(1-methylethoxy) phenyl)-2-(trifluoromethyl) benzamide), including its metabolites and degradates, in or on the commodities in the table below. Compliance with the tolerance levels specified below is to be determined by measuring only flutolanil and its metabolites converted to 2-(trifluoromethyl) benzamide and calculated as flutolanil." Based on review of the data supporting the petition, EPA has also modified the proposed tolerances to be established under paragraph (a), *General*, for flutolanil at 40 CFR 180.484 as follows: Soybean, seed, 0.20 ppm; soybean, forage, 8.0 ppm; soybean, hay, 2.5 ppm; cotton, undelinted seed, 0.20 ppm and cotton, gin byproducts, 0.20 ppm. Additionally, the following tolerances will be removed from paragraph (d), *Indirect or inadvertent residues*, for flutolanil as redundant: Soybean, seed 0.20 ppm; soybean, forage, 8.0 ppm and soybean hay, 2.5 ppm. The reasons for these changes are explained in Unit IV.D.

III. Aggregate Risk Assessment and Determination of Safety

Section 408(b)(2)(A)(i) of FFDCA allows EPA to establish a tolerance (the legal limit for a pesticide chemical residue in or on a food) only if EPA determines that the tolerance is "safe." Section 408(b)(2)(A)(ii) of FFDCA defines "safe" to mean that "there is a reasonable certainty that no harm will result from aggregate exposure to the pesticide chemical residue, including all anticipated dietary exposures and all other exposures for which there is reliable information." This includes exposure through drinking water and in residential settings, but does not include occupational exposure. Section 408(b)(2)(C) of FFDCA requires EPA to give special consideration to exposure of infants and children to the pesticide chemical residue in establishing a tolerance and to "ensure that there is a reasonable certainty that no harm will result to infants and children from aggregate exposure to the pesticide chemical residue. . . . "

Consistent with section 408(b)(2)(D) of FFDCA, and the factors specified in section 408(b)(2)(D) of FFDCA, EPA has reviewed the available scientific data and other relevant information in support of this action. EPA has sufficient data to assess the hazards of and to make a determination on aggregate exposure for flutolanil including exposure resulting from the tolerances established by this action. EPA's assessment of exposures and risks associated with flutolanil follows.

A. Toxicological Profile

EPA has evaluated the available toxicity data and considered its validity, completeness, and reliability as well as the relationship of the results of the studies to human risk. EPA has also considered available information concerning the variability of the sensitivities of major identifiable subgroups of consumers, including infants and children.

Specific information on the studies received and the nature of the adverse effects caused by flutolanil as well as the no-observed-adverse-effect-level (NOAEL) and the lowest-observed-adverse-effect-level (LOAEL) from the toxicity studies are discussed in the final rule published in the **Federal Register** of June 11, 2008, (73 FR 33013) (FRL–8365–6). The complete toxicological profile for flutolanil can be found at *http://www.regulations.gov* on pages 7 through 12 in the document "Flutolanil, Human Health Risk Assessment: Requests for Inadvertent or Indirect Tolerances for Use on Soybean, Wheat, Corn and Cotton" in docket ID number EPA–HQ–OPP–2007–1021.

B. Toxicological Points of Departure/Levels of Concern

Once a pesticide's toxicological profile is determined, EPA identifies toxicological points of departure (POD) and levels of concern to use in evaluating the risk posed by human exposure to the pesticide. For hazards that have a threshold below which there is no appreciable risk, the toxicological POD is used as the basis for derivation of reference values for risk assessment. PODs are developed based on a careful analysis of the doses in each toxicological study to determine the dose at which no adverse effects are observed (the NOAEL) and the lowest dose at which adverse effects of concern are identified (the LOAEL). Uncertainty/safety factors are used in conjunction with the POD to calculate a safe exposure level-generally referred to as a population-adjusted dose (PAD) or a reference dose (RfD) and a safe margin of exposure (MOE). For non-threshold

risks, the Agency assumes that any amount of exposure will lead to some degree of risk. Thus, the Agency estimates risk in terms of the probability of an occurrence of the adverse effect expected in a lifetime. For more information on the general principles EPA uses in risk characterization and a complete description of the risk assessment process, see *http://www.epa.gov/pesticides/factsheets/riskassess.htm*.

A summary of the toxicological endpoints for flutolanil used for human risk assessment is discussed in Unit III, *Aggregate Risk Assessment and Determination of Safety*, of the final rule published in the **Federal Register** of June 11, 2008 (73 FR 33013) (FRL–8365–6).

C. Exposure Assessment

1. *Dietary exposure from food and feed uses*. In evaluating dietary exposure to flutolanil, EPA considered exposure under the petitioned-for tolerances as well as all existing flutolanil tolerances in 40 CFR 180.484. EPA assessed dietary exposures from flutolanil in food as follows:

i. *Acute exposure*. Quantitative acute dietary exposure and risk assessments are performed for a food-use pesticide, if a toxicological study has indicated the possibility of an effect of concern occurring as a result of a 1–day or single exposure.

No such effects were identified in the toxicological studies for flutolanil; therefore, a quantitative acute dietary exposure assessment is unnecessary.

ii. *Chronic exposure*. In conducting the chronic dietary exposure assessment EPA used the food consumption data from the U.S. Department of Agriculture (USDA) 1994–1996 and 1998 Continuing Survey of Food Intake by Individuals (CSFII). As to residue levels in food, the chronic dietary analysis included tolerance level residues, 100 percent crop treated estimates and processing factors (default).

iii. *Cancer*. EPA determines whether quantitative cancer exposure and risk assessments are appropriate for a food-use pesticide based on the weight-of-the-evidence from cancer studies and other relevant data. Cancer risk is quantified using a linear or nonlinear approach. If sufficient information on the carcinogenic mode of action is available, a threshold or non-linear approach is used and a cancer RfD is calculated based on an earlier noncancer key event. If carcinogenic mode of action data are not available, or if the mode of action data determines a mutagenic mode of action, a default linear cancer slope factor approach is utilized. Based on the lack of evidence of carcinogenicity in two rodent studies and the lack of evidence of mutagenicity, flutolanil is not expected to pose a cancer risk to humans. Therefore, a dietary exposure assessment for the purpose of assessing cancer risk is unnecessary.

iv. *Anticipated residue and percent crop treaded (PCT) information*. EPA did not use anticipated residue and/or PCT information in the dietary assessment for flutolanil. Tolerance level residues and/or 100% CT were assumed for all food commodities.

2. *Dietary exposure from drinking water*. The Agency used screening level water exposure models in the dietary exposure analysis and risk assessment for flutolanil in drinking water. These simulation models take into account data on the physical, chemical, and fate/transport characteristics of flutolanil. Further information regarding EPA drinking water models used in pesticide exposure assessment can be found at *http://www.epa.gov/oppefed1/models/water/index.htm*.

The Agency used the First Approximation Rice Model (FARM) to estimate pesticide concentrations in surface water after applying flutolanil on rice and Screening Concentrations in Ground Water (SCI-GROW), which predicts pesticide concentrations in ground water. In general, EPA will use Generic Expected Environmental Concentrations (GENEEC) (a Tier 1 model) before using Pesticide Root Zone/Exposure Analysis Modeling System (PRZM/EXAMS) (a Tier 2 model) for a screening-level assessment for surface water, but given the unique hydrological issues arising from pesticide application to rice paddies, EPA used the FARM rather than GENEEC or PRZM/EXAMS for surface water estimates.

Based on the SCI-GROW model, and the FARM (to estimate pesticide concentrations in surface water after applying flutolanil on rice) the estimated environmental concentrations (EECs) of flutolanil for acute exposures are estimated to be 3.8 parts per billion (ppb) for surface water and 0.34 ppb for ground water. The EEC for peak acute exposure is estimated to be 11.6 ppb for surface water. The EECs for chronic exposures are estimated to be 3.8 ppb for surface water and 0.34 ppb for ground water.

For chronic dietary risk assessment, the water concentration of value 3.8 ppb was used to assess the contribution to drinking water.

3. *From non-dietary exposure*. The term "residential exposure" is used in this document to refer to non-occupational, non-dietary exposure (e.g., for lawn and garden pest control, indoor pest control, termiticides, and flea and tick control on pets).

Flutolanil is currently registered for the following uses that could result in residential exposures: Turf grass and ornamental plants. EPA assessed residential exposure using the following assumptions: Although residential (non-occupational) exposure exists, a quantitative exposure assessment was not conducted since no toxicological endpoint attributable to acute, short-term or intermediate-term exposure have been identified and the current use pattern does not indicate chronic or long-term exposure (6 or more months of continuous exposure) potential. Further information regarding EPA standard assumptions and generic inputs for residential exposures may be found at *http://www.epa.gov/pesticides/trac/science/trac6a05.pdf*.

4. *Cumulative effects from substances with a common mechanism of toxicity*. Section 408(b)(2)(D)(v) of FFDCA requires that, when considering whether to establish, modify, or revoke a tolerance, the Agency consider "available information" concerning the cumulative effects of a particular pesticide's residues and "other substances that have a common mechanism of toxicity."

EPA has not found flutolanil to share a common mechanism of toxicity with any other substances, and flutolanil does not appear to produce a toxic metabolite produced by other substances. For the purposes of this tolerance action, therefore, EPA has assumed that flutolanil does not have a common mechanism of toxicity with other substances. For information regarding EPA's efforts to determine which chemicals have a common mechanism of toxicity and to evaluate the cumulative effects of such chemicals, see EPA's website at *http://www.epa.gov/pesticides/cumulative*.

D. Safety Factor for Infants and Children

1. *In general*. Section 408(b)(2)(C) of FFDCA provides that EPA shall apply an additional tenfold (10X) margin of safety for infants and children in the case of threshold effects to account for prenatal and postnatal toxicity and the completeness of the database on toxicity and exposure unless EPA determines based on reliable data that a different margin of safety will be safe for infants and children. This additional margin of safety is commonly referred to as the FQPA Safety Factor (SF). In applying this provision, EPA either retains the default value of 10X, or uses a different

additional safety factor when reliable data available to EPA support the choice of a different factor.

2. *Prenatal and postnatal sensitivity*. There was no evidence of increased susceptibility of rat or rabbit fetuses to *in utero* exposure or rat pups to post-natal exposure to flutolanil. Flutolanil is not a developmental or reproductive toxicant. No maternal, reproductive, or developmental toxicity was observed at the limit dose.

3. *Conclusion*. EPA has determined that reliable data show the safety of infants and children would be adequately protected if the FQPA SF were reduced to 1X. That decision is based on the following findings:

i. The toxicity database for flutolanil is complete except for acute and subchronic neurotoxicity and immunotoxicity studies. Recent changes to 40 CFR part 158 make acute and subchronic neurotoxicity testing (OPPTS Test Guideline 870.6200), and immunotoxicity testing (OPPTS Test Guideline 870.7800) required for pesticide registration. However, the available data for flutolanil do not suggest that the compound produces hematological or thymus/spleen organ effects indicative of immunotoxicity. Further, there is no evidence of neurotoxicity in any study in the toxicity database for flutolanil. Therefore, EPA does not believe that conducting neurotoxicity and immunotoxicity studies will result in a NOAEL lower than the NOAEL of 50 milligrams/kilogram/day (mg/kg/day) already established for flutolanil. Consequently, an additional database uncertainty factor does not need to be applied.

ii. There is no indication that flutolanil is a neurotoxic chemical and there is no need for a developmental neurotoxicity study or additional UFs to account for neurotoxicity.

iii. There is no evidence that flutolanil results in increased susceptibility in *in utero* rats or rabbits in the prenatal developmental studies or in young rats in the 2–generation reproduction study.

iv. There are no residual uncertainties identified in the exposure databases. The dietary food exposure assessments were performed based on 100% CT and tolerance-level residues. EPA made conservative (protective) assumptions in the ground water and surface water modeling used to assess exposure to flutolanil in drinking water. Residential exposure does not pose a concern for flutolanil because (1) chronic residential exposure is not expected; and (2) although short-term or intermediate-term residential exposure may occur, no relevant adverse effects were identified for dermal or incidental oral or inhalation exposure related to residential use. These assessments will not underestimate the exposure and risks posed by flutolanil.

E. Aggregate Risks and Determination of Safety

EPA determines whether acute and chronic dietary pesticide exposures are safe by comparing aggregate exposure estimates to the acute population adjusted dose (aPAD) and chronic population adjusted dose (cPAD). For linear cancer risks, EPA calculates the lifetime probability of acquiring cancer given the estimated aggregate exposure. Short-term, intermediate-term, and chronic-term risks are evaluated by comparing the estimated aggregate food, water, and residential exposure to the appropriate PODs to ensure that an adequate MOE exists.

1. *Acute Risk.* An acute aggregate risk assessment takes into account acute exposure estimates from dietary consumption of food and drinking water. No adverse effect resulting from a single oral exposure was identified and no acute dietary endpoint was selected. Therefore, flutolanil is not expected to pose an acute risk.

2. *Chronic risk*. Using the exposure assumptions described in this unit for chronic exposure, EPA has concluded that chronic exposure to flutolanil from food and water will utilize 2% of the cPAD for children between 1 to 2 years old, the population group receiving the greatest exposure. Based on the explanation in Unit III.C.3., regarding residential use patterns, chronic residential exposure to residues of flutolanil is not expected.

3. *Short-term and intermediate-term risk*. Short-term and intermediate-term aggregate exposure take into account short-term and intermediate-term residential exposure plus chronic exposure to food and water (considered to be a background exposure level).

Because no short- or intermediate-term adverse effect was identified, flutolanil is not expected to pose a short-term or intermediate-term risk.

4. *Aggregate cancer risk for U.S. population*. EPA has classified flutolanil as "not likely" to be a human carcinogen.

5. *Determination of safety*. Based on these risk assessments, EPA concludes that there is a reasonable certainty that no harm will result to the general population, or to infants and children from aggregate exposure to flutolanil residues.

IV. Other Considerations

A. Analytical Enforcement Methodology

An adequate enforcement methodology, (Method AU/95R/04), a common moiety Gas Chromatography/Mass Spectrometry (GC/MS) method which determines residues of flutolanil and metabolites as 2-trifluoromethyl benzoic acid (2-TFBA) is available to enforce the tolerance expression.

The method may be requested from: Chief, Analytical Chemistry Branch, Environmental Science Center, 701 Mapes Rd., Ft. Meade, MD 20755–5350; telephone number: (410) 305–2905; e-mail address: *residuemethods@epa.gov*.

B. International Residue Limits

Codex maximum residue limits (MRLs) are established for residues of flutolanil in rice commodities at 1–10 ppm, and in livestock commodities at 0.05–0.2 ppm. No Canadian or Mexican MRLs have been established. No Codex MRLs are established for soybean, cotton seed, or sugar beet commodities.

C. Response to Comments

One comment was received from a private citizen objecting to the establishment of tolerances for flutolanil. The commenter criticized EPA's reliance on toxicology testing on animals. The Agency has received, and responded to, similar comments from this commenter on numerous previous occasions. Refer to the **Federal Register** issues of June 30, 2005 (70 FR 37686), January 7, 2005 (70 FR 1354), October 28, 2004 (FR 69 63096) for the Agency's response to these objections.

D. Revisions to Petitioned-For Tolerances

The Agency is establishing tolerances that are greater than the proposed tolerance for soybean seed and cotton seed because the enforcement analytical method has not been validated at a level below 0.20 ppm, and the greater tolerance value is needed to accommodate indirect residues from soybean rotational crops. Additional tolerances are established for cotton gin byproducts, as the radiolabeled seed treatment study revealed residues on cotton gin trash, and soybean hay to accommodate the seed treatment use and the inadvertent residue from soybean as a rotational crop.

EPA is revising the tolerance expression in §180.484 to clarify that, as provided in FFDCA section 408(a)(3), the tolerance covers metabolites and degradates of flutolanil not specifically mentioned; and that compliance with the specified tolerance levels is to be determined by measuring only the

specific compounds mentioned in the tolerance expression. The tolerance definition previously read "residues of the fungicide flutolanil, *N*-(3-(1-methylethoxy)phenyl)-2-(trifluoromethyl)benzamide, and its metabolites converted to 2-(trifluoromethyl) benzoic acid and calculated as flutolanil." It is being changed to "residues of flutolanil, *N*-(3-(1-methylethoxy)phenyl)-2-(trifluoromethyl)benzamide, including its metabolites and degradates, in or on the commodities. Compliance with the tolerance levels is to be determined by measuring only flutolanil and its metabolites converted to 2-(trifluoromethyl) benzoic acid and calculated as flutolanil."

Finally, the inadvertent residue, rotational crop tolerances previously established for soybean forage and soybean hay encompass the use on soybean as a seed treatment. Therefore the tolerances established under paragraph (d), *Indirect or inadvertent residues*, for soybean, seed at 0.20 ppm; soybean, forage at 8.0 ppm, and soybean hay at 2.5 ppm are being revoked since the same tolerance values are being established under paragraph (a), *General*.

V. Conclusion

Therefore, tolerances are established for residues of flutolanil, *N*-(3-(1-methylethoxy)phenyl)-2-(trifluoromethyl)benzamide, including its metabolites and degradates, in or on cotton, undelinted seed at 0.20 ppm; soybean, seed at 0.20 ppm; soybean, forage at 8.0 ppm; soybean, hay at 2.5 ppm; cotton, gin byproducts at 0.20 ppm. Compliance with the tolerance levels is to be determined by measuring only flutolanil and its metabolites converted to 2-(trifluoromethyl) benzoic acid and calculated as flutolanil.

VI. Statutory and Executive Order Reviews

This final rule establishes tolerances under section 408(d) of FFDCA in response to a petition submitted to the Agency. The Office of Management and Budget (OMB) has exempted these types of actions from review under Executive Order 12866, entitled *Regulatory Planning and Review* (58 FR 51735, October 4, 1993). Because this final rule has been exempted from review under Executive Order 12866, this final rule is not subject to Executive Order 13211, entitled *Actions Concerning Regulations That Significantly Affect Energy Supply, Distribution, or Use* (66 FR 28355, May 22, 2001) or Executive Order 13045, entitled *Protection of Children from Environmental Health Risks and Safety Risks* (62 FR 19885, April 23, 1997). This final rule does not contain any information collections subject to OMB approval under the Paperwork Reduction Act (PRA), 44 U.S.C. 3501 *et seq.*, nor does it require any special considerations under Executive Order 12898, entitled *Federal Actions to Address Environmental Justice in Minority Populations and Low-Income Populations* (59 FR 7629, February 16, 1994).

Since tolerances and exemptions that are established on the basis of a petition under section 408(d) of FFDCA, such as the tolerance in this final rule, do not require the issuance of a proposed rule, the requirements of the Regulatory Flexibility Act (RFA) (5 U.S.C. 601 *et seq.*) do not apply.

This final rule directly regulates growers, food processors, food handlers, and food retailers, not States or tribes, nor does this action alter the relationships or distribution of power and responsibilities established by Congress in the preemption provisions of section 408(n)(4) of FFDCA. As such, the Agency has determined that this action will not have a substantial direct effect on States or tribal governments, on the relationship between the national government and the States or tribal governments, or on the distribution of power and responsibilities among the various levels of government or between the Federal Government and Indian tribes. Thus, the Agency has determined that Executive Order 13132, entitled *Federalism* (64 FR 43255, August 10, 1999) and Executive Order 13175, entitled *Consultation and Coordination with Indian Tribal Governments* (65 FR 67249, November 9, 2000) do not apply to this final rule. In addition, this final rule does not impose any enforceable duty or contain any unfunded mandate as described under Title II of the Unfunded Mandates Reform Act of 1995 (UMRA) (Public Law 104–4).

This action does not involve any technical standards that would require Agency consideration of voluntary consensus standards pursuant to section 12(d) of the National Technology Transfer and Advancement Act of 1995 (NTTAA), Public Law 104–113, section 12(d) (15 U.S.C. 272 note).

VII. Congressional Review Act

The Congressional Review Act, 5 U.S.C. 801 *et seq.*, generally provides that before a rule may take effect, the agency promulgating the rule must submit a rule report to each House of the Congress and to the Comptroller General of the United States. EPA will submit a report containing this rule and other required information to the U.S. Senate, the U.S. House of Representatives, and the Comptroller General of the United States prior to publication of this final rule in the **Federal Register**. This final rule is not a "major rule" as defined by 5 U.S.C. 804(2).

List of Subjects in 40 CFR Part 180

Environmental protection, Administrative practice and procedure, Agricultural commodities, Pesticides and pests, Reporting and recordkeeping requirements.

Dated: March 26, 2010.

Lois Rossi,

Director, Registration Division, Office of Pesticide Prorgams.

■ Therefore, 40 CFR chapter I is amended as follows:

PART 180—[AMENDED]

■ 1. The authority citation for part 180 continues to read as follows:

Authority: 21 U.S.C. 321(q), 346a and 371.

■ 2. Section 180.484 is amended as follows:

a. Revise the section heading.

b. Revise the introductory text of paragraph (a).

c. Add alphabetically entries to the table in paragraph (a) for cotton, gin byproducts; cotton, undelinted seed; soybean forage; soybean, hay; and soybean, seed.

d. Revise paragraph (d).

§ 180.484 Flutolanil; tolerances for residues.

(a) *General*. Tolerances are established for residues of flutolanil, *N*-(3-(1-methylethoxy) phenyl)-2-(trifluoromethyl)benzamide, including its metabolites and degradates, in or on the commodities in the table below. Compliance with the tolerance levels specified below is to be determined by measuring only flutolanil and its metabolites converted to 2-(trifluoromethyl) benzoic acid and calculated as flutolanil, in or on the following commodities:

Commodity	Parts per million
* * *	* *
Cotton, gin byproducts ...	0.20
Cotton, undelinted seed	0.20
* * *	* *
Soybean, forage	8.0
Soybean, hay	2.5
Soybean, seed	0.20

* * * * *

(d) *Indirect or inadvertent residues.* Tolerances are established for the indirect or inadvertent residues of

flutolanil, *N*-(3-(1-methylethoxy)phenyl)-2-(trifluoromethyl)benzamide, including its metabolites and degradates, in or on the commodities in the table below. Compliance with the tolerance levels specified below is to be determined by measuring only flutolanil and its metabolites converted to 2-(trifluoromethyl) benzoic acid and calculated as flutolanil, in or on the following commodities.

Commodity	Parts per million
Wheat, bran	0.20
Wheat, forage	2.5
Wheat, grain	0.05
Wheat, hay	1.2
Wheat, straw	0.20

* * * * *

[FR Doc. 2010–7624 Filed 4–6–10; 8:45 am]

BILLING CODE 6560–50–S

ENVIRONMENTAL PROTECTION AGENCY

40 CFR Part 180

[EPA–HQ–OPP–2009–0673; FRL–8817–4]

Pendimethalin; Pesticide Tolerances

AGENCY: Environmental Protection Agency (EPA).

ACTION: Final rule.

SUMMARY: This regulation amends the current tolerance for combined residues of pendimethalin and its metabolite, expressed as pendimethalin equivalents, in or on alfalfa forage. BASF Corporation requested this tolerance amendment under the Federal Food, Drug, and Cosmetic Act (FFDCA).

DATES: This regulation is effective April 7, 2010. Objections and requests for hearings must be received on or before June 7, 2010, and must be filed in accordance with the instructions provided in 40 CFR part 178 (see also Unit I.C. of the **SUPPLEMENTARY INFORMATION**).

ADDRESSES: EPA has established a docket for this action under docket identification (ID) number EPA–HQ–OPP–2009– 0673. All documents in the docket are listed in the docket index available at *http://www.regulations.gov*. Although listed in the index, some information is not publicly available, e.g., Confidential Business Information (CBI) or other information whose disclosure is restricted by statute. Certain other material, such as copyrighted material, is not placed on the Internet and will be publicly available only in hard copy form. Publicly available docket materials are available in the electronic docket at *http://www.regulations.gov*, or, if only available in hard copy, at the OPP Regulatory Public Docket in Rm. S–4400, One Potomac Yard (South Bldg.), 2777 S. Crystal Dr., Arlington, VA. The Docket Facility is open from 8:30 a.m. to 4 p.m., Monday through Friday, excluding legal holidays. The Docket Facility telephone number is (703) 305–5805.

FOR FURTHER INFORMATION CONTACT: Jim Tompkins, Registration Division (7505P), Office of Pesticide Programs, Environmental Protection Agency, 1200 Pennsylvania Ave., NW., Washington, DC 20460–0001; telephone number: (703) 305–5697; e-mail address: *tompkins.jim@epa.gov*.

SUPPLEMENTARY INFORMATION:

I. General Information

A. Does this Action Apply to Me?

You may be potentially affected by this action if you are an agricultural producer, food manufacturer, or pesticide manufacturer. Potentially affected entities may include, but are not limited to those engaged in the following activities:

- Crop production (NAICS code 111).
- Animal production (NAICS code 112).
- Food manufacturing (NAICS code 311).
- Pesticide manufacturing (NAICS code 32532).

This listing is not intended to be exhaustive, but rather to provide a guide for readers regarding entities likely to be affected by this action. Other types of entities not listed in this unit could also be affected. The North American Industrial Classification System (NAICS) codes have been provided to assist you and others in determining whether this action might apply to certain entities. If you have any questions regarding the applicability of this action to a particular entity, consult the person listed under **FOR FURTHER INFORMATION CONTACT**.

B. How Can I Get Electronic Access to Other Related Information?

You may access a frequently updated electronic version of EPA's tolerance regulations at 40 CFR part 180 through the Government Printing Office's e-CFR cite at *http://www.gpoaccess.gov/ecfr*.

C. Can I File an Objection or Hearing Request?

Under section 408(g) of FFDCA, 21 U.S.C. 346a, any person may file an objection to any aspect of this regulation and may also request a hearing on those objections. You must file your objection or request a hearing on this regulation in accordance with the instructions provided in 40 CFR part 178. To ensure proper receipt by EPA, you must identify docket ID number EPA–HQ–OPP–2009–0673 in the subject line on the first page of your submission. All objections and requests for a hearing must be in writing, and must be received by the Hearing Clerk on or before June 7, 2010. Addresses for mail and hand delivery of objections and hearing requests are provided in 40 CFR 178.25(b).

In addition to filing an objection or hearing request with the Hearing Clerk as described in 40 CFR part 178, please submit a copy of the filing that does not contain any CBI for inclusion in the public docket that is described in **ADDRESSES**. Information not marked confidential pursuant to 40 CFR part 2 may be disclosed publicly by EPA without prior notice. Submit this copy, identified by docket ID number EPA–HQ–OPP–2009–0673, by one of the following methods:

- *Federal eRulemaking Portal*: *http://www.regulations.gov*. Follow the on-line instructions for submitting comments.
- *Mail*: Office of Pesticide Programs (OPP) Regulatory Public Docket (7502P), Environmental Protection Agency, 1200 Pennsylvania Ave., NW., Washington, DC 20460–0001.
- *Delivery*: OPP Regulatory Public Docket (7502P), Environmental Protection Agency, Rm. S–4400, One Potomac Yard (South Bldg.), 2777 S. Crystal Dr., Arlington, VA. Deliveries are only accepted during the Docket Facility's normal hours of operation (8:30 a.m. to 4 p.m., Monday through Friday, excluding legal holidays). Special arrangements should be made for deliveries of boxed information. The Docket Facility telephone number is (703) 305–5805.

II. Petition for Tolerance

In the **Federal Register** of January 6, 2010 (75 FR 864) (FRL–8801–5), EPA issued a notice pursuant to section 408(d)(3) of FFDCA, 21 U.S.C. 346a(d)(3), announcing the filing of a pesticide petition (PP 9F7576) by BASF Corporation, 26 Davis Drive, Research Triangle Park, NC 27709. The petition requested that 40 CFR 180.361 be amended by increasing the tolerance for the combined residues of the herbicide pendimethalin, [*N*-(1-ethylpropyl)-3,4-dimethyl-2,6-dinitrobenzenamine], and its metabolite 4-[(1-ethylpropyl)amino]-2-methyl-3,5-dinitrobenzyl alcohol, in or on alfalfa, forage from 3.0 parts per million (ppm) to 3.5 (ppm). That notice referenced a summary of the petition

prepared by BASF Corporation, the registrant, which is available in the docket, *http://www.regulations.gov*. Comments were received on the notice of filing. EPA's response to these comments is discussed in Unit IV.D.

III. Aggregate Risk Assessment and Determination of Safety

Section 408(b)(2)(A)(i) of FFDCA allows EPA to establish a tolerance (the legal limit for a pesticide chemical residue in or on a food) only if EPA determines that the tolerance is "safe." Section 408(b)(2)(A)(ii) of FFDCA defines "safe" to mean that "there is a reasonable certainty that no harm will result from aggregate exposure to the pesticide chemical residue, including all anticipated dietary exposures and all other exposures for which there is reliable information." This includes exposure through drinking water and in residential settings, but does not include occupational exposure. Section 408(b)(2)(C) of FFDCA requires EPA to give special consideration to exposure of infants and children to the pesticide chemical residue in establishing a tolerance and to "ensure that there is a reasonable certainty that no harm will result to infants and children from aggregate exposure to the pesticide chemical residue...."

Consistent with section 408(b)(2)(D) of FFDCA, and the factors specified in section 408(b)(2)(D) of FFDCA, EPA has reviewed the available scientific data and other relevant information in support of this action. EPA has sufficient data to assess the hazards of and to make a determination on aggregate exposure for combined residues of pendimethalin and its metabolite including exposure resulting from the tolerance established by this action. EPA's assessment of exposures and risks associated with pendimethalin, [*N*-(1-ethylpropyl)-3,4-dimethyl-2,6-dinitrobenzenamine] and its metabolite 4-[(1-ethylpropyl)amino]-2-methyl-3,5-dinitrobenzyl alcohol follows.

On January 27, 2010, the Agency published a final rule (75 FR 4279, FRL–8804–2) establishing tolerances for combined residues of pendimethalin and its metabolite in or on various grass commodities in crop group 17. When the Agency conducted the risk assessment in support of the January, 2010 tolerance action, it considered the use of pendimethalin on alfalfa, including potential residues of pendimethalin and its metabolite in or on alfalfa hay and forage. EPA also considered the potential for secondary residues of pendimethalin in livestock commodities from consumption of treated alfalfa hay and forage and determined that there was no reasonable expectation of finite residues to occur. Since alfalfa hay and alfalfa forage are both categorized as roughage, EPA assessed the pendimethalin dietary burden of livestock using the higher (more conservative) of the two tolerances (alfalfa hay at 4.0 ppm). Increasing the tolerance for alfalfa forage to 3.5 ppm will not affect the estimated livestock dietary burden or the estimated aggregate risks resulting from use of pendimethalin, as discussed in the January 27, 2010 (75 FR 4279–4284, FRL–8804–2) **Federal Register**. Refer to this **Federal Register** document, available at *http://www.regulations.gov*, for a detailed discussion of the aggregate risk assessments and determination of safety. EPA relies upon those risk assessments and the findings made in the **Federal Register** document in support of this action.

Therefore, based on the risk assessments discussed in the final rule published in the **Federal Register** of January 27, 2010 (75 FR 4279, FRL–8804–2), EPA concludes that there is a reasonable certainty that no harm will result to the general population, or to infants and children from aggregate exposure to pendimethalin residues.

IV. Other Considerations

A. Analytical Enforcement Methodology

Adequate enforcement methodology, using liquid chromatography/mass spectrometry analysis (LC/MS/MS), is available to enforce the tolerance expression. The method may be requested from: Chief, Analytical Chemistry Branch, Environmental Science Center, 701 Mapes Rd., Ft. Meade, MD 20755–5350; telephone number: (410) 305–2905; e-mail address: *residuemethods@epa.gov*

B. International Residue Limits

There are no established or proposed Codex maximum residue limits (MRLs) for pendimethalin.

C. Revisions to Petitioned-for Tolerances

EPA has revised the pendimethalin tolerance expression for the new and existing tolerances to clarify the chemical moieties that are covered by the tolerances and specify how compliance with the tolerances is to be measured. The revised tolerance expression makes clear that the tolerances cover residues of pendimethalin and its metabolites and degradates, but that compliance with the tolerance levels will be determined by measuring only pendimethalin, [*N*-(1-ethylpropyl)-3,4-dimethyl-2,6-dinitrobenzenamine], and its metabolite 4-[(1-ethylpropyl)amino]-2-methyl-3,5-dinitrobenzyl alcohol, calculated as the stoichiometric equivalent of pendimethalin.

EPA has determined that it is reasonable to make this change final without prior proposal and opportunity for comment, because public comment is not necessary, in that the change has no substantive effect on the tolerance, but rather is merely intended to clarify the existing tolerance expression.

D. Response to Comments

EPA received comments from an anonymous submitter objecting to pesticides and other "toxic" chemicals generally and recommending against any tolerances greater than zero for this product. The Agency understands the commenter's concerns and recognizes that some individuals believe that pesticides should be banned completely. However, the existing legal framework provided by section 408 of the Federal Food, Drug and Cosmetic Act (FFDCA) contemplates that tolerances greater than zero may be set when persons seeking such tolerances or exemptions have demonstrated that the pesticide meets the safety standard imposed by that statute. This submitter's comments appear to be directed at the underlying statute and not EPA's implementation of it; the citizen has made no contention that EPA has acted in violation of the statutory framework.

V. Conclusion

Therefore, a tolerance is established for residues of pendimethalin, including its metabolites and degradates, in or on the alfalfa, forage at 3.5 ppm. Compliance with the tolerance level is to be determined by measuring only pendimethalin, [*N*-(1-ethylpropyl)-3,4-dimethyl-2,6-dinitrobenzenamine], and its metabolite, 4-[(ethylpropyl) amino]-2-methyl-3,5-dinitrobenzyl alcohol, calculated as the stoichiometric equivalent of pendimethalin, in or on alfalfa, forage.

VI. Statutory and Executive Order Reviews

This final rule establishes tolerances under section 408(d) of FFDCA in response to a petition submitted to the Agency. The Office of Management and Budget (OMB) has exempted these types of actions from review under Executive Order 12866, entitled *Regulatory Planning and Review* (58 FR 51735, October 4, 1993). Because this final rule has been exempted from review under Executive Order 12866, this final rule is not subject to Executive Order 13211,

entitled *Actions Concerning Regulations That Significantly Affect Energy Supply, Distribution, or Use* (66 FR 28355, May 22, 2001) or Executive Order 13045, entitled *Protection of Children from Environmental Health Risks and Safety Risks* (62 FR 19885, April 23, 1997). This final rule does not contain any information collections subject to OMB approval under the Paperwork Reduction Act (PRA), 44 U.S.C. 3501 *et seq.*, nor does it require any special considerations under Executive Order 12898, entitled *Federal Actions to Address Environmental Justice in Minority Populations and Low-Income Populations* (59 FR 7629, February 16, 1994).

Since tolerances and exemptions that are established on the basis of a petition under section 408(d) of FFDCA, such as the tolerance in this final rule, do not require the issuance of a proposed rule, the requirements of the Regulatory Flexibility Act (RFA) (5 U.S.C. 601 *et seq.*) do not apply.

This final rule directly regulates growers, food processors, food handlers, and food retailers, not States or tribes, nor does this action alter the relationships or distribution of power and responsibilities established by Congress in the preemption provisions of section 408(n)(4) of FFDCA. As such, the Agency has determined that this action will not have a substantial direct effect on States or tribal governments, on the relationship between the national government and the States or tribal governments, or on the distribution of power and responsibilities among the various levels of government or between the Federal Government and Indian tribes. Thus, the Agency has determined that Executive Order 13132, entitled *Federalism* (64 FR 43255, August 10, 1999) and Executive Order 13175, entitled *Consultation and Coordination with Indian Tribal Governments* (65 FR 67249, November 9, 2000) do not apply to this final rule. In addition, this final rule does not impose any enforceable duty or contain any unfunded mandate as described under Title II of the Unfunded Mandates Reform Act of 1995 (UMRA) (Public Law 104–4).

This action does not involve any technical standards that would require Agency consideration of voluntary consensus standards pursuant to section 12(d) of the National Technology Transfer and Advancement Act of 1995 (NTTAA), Public Law 104–113, section 12(d) (15 U.S.C. 272 note).

VII. Congressional Review Act

The Congressional Review Act, 5 U.S.C. 801 *et seq.*, generally provides that before a rule may take effect, the agency promulgating the rule must submit a rule report to each House of the Congress and to the Comptroller General of the United States. EPA will submit a report containing this rule and other required information to the U.S. Senate, the U.S. House of Representatives, and the Comptroller General of the United States prior to publication of this final rule in the **Federal Register**. This final rule is not a "major rule" as defined by 5 U.S.C. 804(2).

List of Subjects in 40 CFR Part 180

Environmental protection, Administrative practice and procedure, Agricultural commodities, Pesticides and pests, Reporting and recordkeeping requirements.

Dated: March 26, 2010.

Lois Rossi,

Director, Registration Division, Office of Pesticide Programs.

■ Therefore, 40 CFR chapter I is amended as follows:

PART 180—[AMENDED]

■ 1. The authority citation for part 180 continues to read as follows:

Authority: 21 U.S.C. 321(q), 346a and 371.

■ 2. Section 180.361, revise the introductory text and the entry for Alfalfa, forage in the table in paragraph (a) to read as follows:

§ 180.361 Pendimethalin; tolerances for residues.

(a) *General.* Tolerances are established for residues of the herbicide pendimethalin, including its metabolites and degradates, in or on the commodities. Compliance with the tolerance levels specified in the following table below is to be determined by measuring only pendimethalin, [*N*- (1-ethylpropyl)-3,4-dimethyl-2,6-dinitrobenzenamine], and its metabolite, 4-[(1-ethylpropyl)amino]-2-methyl-3,5-dinitrobenzyl alcohol, calculated as the stoichiometric equivalent of pendimethalin, in or on the following commodities:

Commodity	Parts per million
Alfalfa, forage	3.5
* * * * *	

* * * * *

[FR Doc. 2010–7740 Filed 4–6–10; 8:45 am]

BILLING CODE 6560–50–S

ENVIRONMENTAL PROTECTION AGENCY

40 CFR Part 180

[EPA–HQ–OPP–2009–0057; FRL–8818–4]

Nicosulfuron; Pesticide Tolerances

AGENCY: Environmental Protection Agency (EPA).

ACTION: Final rule.

SUMMARY: This regulation establishes tolerances for residues of nicosulfuron in or on cattle, fat; cattle, meat; cattle, meat byproducts; goat, fat; goat, meat; goat, meat byproducts; grass, forage; grass, hay; horse, fat; horse, meat; horse, meat byproducts; milk; sheep, fat; sheep, meat; and sheep, meat byproducts. E. I. du Pont de Nemours and Company requested these tolerances under the Federal Food, Drug, and Cosmetic Act (FFDCA). This regulation also removes the existing tolerance for residues of nicosulfuron on corn, forage.

DATES: This regulation is effective April 7, 2010. Objections and requests for hearings must be received on or before June 7, 2010, and must be filed in accordance with the instructions provided in 40 CFR part 178 (see also Unit I.C. of the **SUPPLEMENTARY INFORMATION**).

ADDRESSES: EPA has established a docket for this action under docket identification (ID) number EPA–HQ–OPP–2009–0057. All documents in the docket are listed in the docket index available at *http://www.regulations.gov*. Although listed in the index, some information is not publicly available, e.g., Confidential Business Information (CBI) or other information whose disclosure is restricted by statute. Certain other material, such as copyrighted material, is not placed on the Internet and will be publicly available only in hard copy form. Publicly available docket materials are available in the electronic docket at *http://www.regulations.gov*, or, if only available in hard copy, at the OPP Regulatory Public Docket in Rm. S–

4400, One Potomac Yard (South Bldg.), 2777 S. Crystal Dr., Arlington, VA. The Docket Facility is open from 8:30 a.m. to 4 p.m., Monday through Friday, excluding legal holidays. The Docket Facility telephone number is (703) 305–5805.

FOR FURTHER INFORMATION CONTACT:

Mindy Ondish, Registration Division (7505P), Office of Pesticide Programs, Environmental Protection Agency, 1200 Pennsylvania Ave., NW., Washington, DC 20460–0001; telephone number: (703) 605-0723; e-mail address: *ondish.mindy@epa.gov*.

SUPPLEMENTARY INFORMATION:

I. General Information

A. Does this Action Apply to Me?

You may be potentially affected by this action if you are an agricultural producer, food manufacturer, or pesticide manufacturer. Potentially affected entities may include, but are not limited to those engaged in the following activities:

- Crop production (NAICS code 111).
- Animal production (NAICS code 112).
- Food manufacturing (NAICS code 311).
- Pesticide manufacturing (NAICS code 32532).

This listing is not intended to be exhaustive, but rather to provide a guide for readers regarding entities likely to be affected by this action. Other types of entities not listed in this unit could also be affected. The North American Industrial Classification System (NAICS) codes have been provided to assist you and others in determining whether this action might apply to certain entities. If you have any questions regarding the applicability of this action to a particular entity, consult the person listed under **FOR FURTHER INFORMATION CONTACT**.

B. How Can I Get Electronic Access to Other Related Information?

You may access a frequently updated electronic version of EPA's tolerance regulations at 40 CFR part 180 through the Government Printing Office's e-CFR site at *http://www.gpoaccess.gov/ecfr*. You may also access the OPPTS harmonized test guidelines referenced in this document electronically at *http://www.epa.gov/oppts* and select "Test Methods and Guideline."

C. Can I File an Objection or Hearing Request?

Under section 408(g) of FFDCA, 21 U.S.C. 346a, any person may file an objection to any aspect of this regulation and may also request a hearing on those objections. You must file your objection or request a hearing on this regulation in accordance with the instructions provided in 40 CFR part 178. To ensure proper receipt by EPA, you must identify docket ID number EPA–HQ–OPP–2009–0057 in the subject line on the first page of your submission. All requests must be in writing, and must be mailed or delivered to the Hearing Clerk as required by 40 CFR part 178 on or before June 7, 2010.

In addition to filing an objection or hearing request with the Hearing Clerk as described in 40 CFR part 178, please submit a copy of the filing that does not contain any CBI for inclusion in the public docket that is described in **ADDRESSES**. Information not marked confidential pursuant to 40 CFR part 2 may be disclosed publicly by EPA without prior notice. Submit this copy, identified by docket ID number EPA–HQ–OPP–2009–0057, by one of the following methods:

- *Federal eRulemaking Portal*: *http://www.regulations.gov*. Follow the on-line instructions for submitting comments.
- *Mail*: Office of Pesticide Programs (OPP) Regulatory Public Docket (7502P), Environmental Protection Agency, 1200 Pennsylvania Ave., NW., Washington, DC 20460–0001.
- *Delivery*: OPP Regulatory Public Docket (7502P), Environmental Protection Agency, Rm. S–4400, One Potomac Yard (South Bldg.), 2777 S. Crystal Dr., Arlington, VA. Deliveries are only accepted during the Docket Facility's normal hours of operation (8:30 a.m. to 4 p.m., Monday through Friday, excluding legal holidays). Special arrangements should be made for deliveries of boxed information. The Docket Facility telephone number is (703) 305–5805.

II. Petition for Tolerance

In the **Federal Register** of April 8, 2009 (74 FR 15971) (FRL–8407–4), EPA issued a notice pursuant to section 408(d)(3) of FFDCA, 21 U.S.C. 346a(d)(3), announcing the filing of a pesticide petition (PP 8F7501) by E. I. du Pont de Nemours and Company, P.O. Box 80038, Wilmington, DE 19880–0038. The petition requested that 40 CFR 180.454 be amended by establishing tolerances for residues of the herbicide nicosulfuron, 3-Pyridinecarboxamide, 2-[[[[(4,6-dimethoxy-2-pyrimidinyl)amino] carbonyl]amino]sulfonyl]-N,N-dimethyl-, in or on grass, forage at 9.0 parts per million (ppm); grass, hay at 25.0 ppm; fat (of cattle, goat, hog, horse, and sheep) at 0.05 ppm; meat (of cattle, goat, hog, horse, and sheep) at 0.05 ppm; meat byproducts (of cattle, goat, hog, horse, and sheep) at 0.05 ppm; milk at 0.05 ppm; and milk, fat at 0.02 ppm. That notice referenced a summary of the petition prepared by E. I. du Pont de Nemours and Company, the registrant, which is available to the public in the docket, *http://www.regulations.gov*. There were no comments received in response to the notice of filing.

Based upon review of the data supporting the petition, EPA is not establishing the proposed tolerances for hog, fat; hog, meat; hog, meat byproducts; and milk, fat. The proposed tolerance levels for cattle, fat; cattle, meat; goat, fat; goat, meat; horse, fat; horse, meat; milk; sheep, fat; and sheep, meat are being established at 0.01 ppm, not 0.05 ppm. The reasons for these changes are explained in Unit IV.C.

III. Aggregate Risk Assessment and Determination of Safety

Section 408(b)(2)(A)(i) of FFDCA allows EPA to establish a tolerance (the legal limit for a pesticide chemical residue in or on a food) only if EPA determines that the tolerance is "safe." Section 408(b)(2)(A)(ii) of FFDCA defines "safe" to mean that "there is a reasonable certainty that no harm will result from aggregate exposure to the pesticide chemical residue, including all anticipated dietary exposures and all other exposures for which there is reliable information." This includes exposure through drinking water and in residential settings, but does not include occupational exposure. Section 408(b)(2)(C) of FFDCA requires EPA to give special consideration to exposure of infants and children to the pesticide chemical residue in establishing a tolerance and to "ensure that there is a reasonable certainty that no harm will result to infants and children from aggregate exposure to the pesticide chemical residue."

Consistent with section 408(b)(2)(D) of FFDCA, and the factors specified in section 408(b)(2)(D) of FFDCA, EPA has reviewed the available scientific data and other relevant information in support of this action. EPA has sufficient data to assess the hazards of and to make a determination on aggregate exposure for the petitioned-for tolerances for residues of nicosulfuron and its metabolites and degradates in or on cattle, fat at 0.01 ppm; cattle, meat at 0.01 ppm; cattle, meat byproducts at 0.05 ppm; goat, fat at 0.01 ppm; goat, meat at 0.01 ppm; goat, meat byproducts at 0.05 ppm; grass, forage at 9.0 ppm; grass, hay at 25.0 ppm; horse, fat at 0.01 ppm; horse, meat at 0.01 ppm; horse, meat byproducts at 0.05 ppm; milk at 0.01 ppm; sheep, fat at 0.01 ppm; sheep, meat at 0.01 ppm; and sheep, meat

byproducts at 0.05 ppm. EPA's assessment of exposures and risks associated with establishing tolerances follows.

A. Toxicological Profile

EPA has evaluated the available toxicity data and considered its validity, completeness, and reliability as well as the relationship of the results of the studies to human risk. EPA has also considered available information concerning the variability of the sensitivities of major identifiable subgroups of consumers, including infants and children. Specific information on the studies received and the nature of the adverse effects caused by nicosulfuron as well as the no-observed-adverse-effect-level (NOAEL) and the lowest-observed-adverse-effect-level (LOAEL) from the toxicity studies can be found at *http://www.regulations.gov* in document "Nicosulfuron Human Health Risk Assessment for the Proposed Use on Grasses," p. 30 in docket ID number EPA–HQ–OPP–2009–0057.

Nicosulfuron has low acute toxicity by oral, dermal, and inhalation routes of exposure. It is a moderate eye irritant and is not a dermal sensitizer. No adverse effects were observed following subchronic or chronic dietary administrations of doses exceeding the limit dose in rats and mice. Chronic dietary administration to dogs produced mild effects (decreased body weight gains in males, increased relative liver and kidney weights) at the limit dose. No findings were reported in dogs following subchronic dosing at comparable dietary levels.

There was no evidence of potential immunotoxicity or neurotoxicity in the submitted studies.

Nicosulfuron was classified by EPA as a "not likely" human carcinogen based on the lack of evidence of carcinogenicity in studies conducted in rats and mice and in the *in vitro* and *in vivo* genotoxicity studies.

B. Toxicological Endpoints

For hazards that have a threshold below which there is no appreciable risk, a toxicological point of departure (POD) is identified as the basis for derivation of reference values for risk assessment. The POD may be defined as the highest dose at which no adverse effects are observed (the NOAEL) in the toxicology study identified as appropriate for use in risk assessment. However, if a NOAEL cannot be determined, the lowest dose at which adverse effects of concern are identified (the LOAEL) or a benchmark dose (BMD) approach is sometimes used for risk assessment. Uncertainty/safety factors (UFs) are used in conjunction with the POD to take into account uncertainties inherent in the extrapolation from laboratory animal data to humans and in the variations in sensitivity among members of the human population as well as other unknowns. Safety is assessed for acute and chronic dietary risks by comparing aggregate food and water exposure to the pesticide to the acute population adjusted dose (aPAD) and chronic population adjusted dose (cPAD). The aPAD and cPAD are calculated by dividing the POD by all applicable UFs. Aggregate short-, intermediate-, and chronic-term risks are evaluated by comparing food, water, and residential exposure to the POD to ensure that the margin of exposure (MOE) called for by the product of all applicable UFs is not exceeded. This latter value is referred to as the level of concern (LOC).

For non-threshold risks, the Agency assumes that any amount of exposure will lead to some degree of risk. Thus, the Agency estimates risk in terms of the probability of an occurrence of the adverse effect greater than that expected in a lifetime. For more information on the general principles EPA uses in risk characterization and a complete description of the risk assessment process, see *http://www.epa.gov/pesticides/factsheets/riskassess.htm*.

A summary of the toxicological endpoints for nicosulfuron used for human risk assessment can be found at *http://www.regulations.gov* in document "Nicosulfuron Human Health Risk Assessment for the Proposed Use on Grasses," p. 15 in docket ID number EPA–HQ–OPP–2009–0057.

C. Exposure Assessment

1. *Dietary exposure from food and feed uses*. In evaluating dietary exposure to nicosulfuron, EPA considered exposure under the petitioned-for tolerances as well as all existing nicosulfuron tolerances in 40 CFR 180.454. EPA assessed dietary exposures from nicosulfuron in food as follows:

i. *Acute exposure*. Quantitative acute dietary exposure and risk assessments are performed for a food-use pesticide, if a toxicological study has indicated the possibility of an effect of concern occurring as a result of a 1–day or single exposure.

No such effects were identified in the toxicological studies for nicosulfuron; therefore, a quantitative acute dietary exposure assessment is unnecessary.

ii. *Chronic exposure*. In conducting the chronic dietary exposure assessment EPA used the food consumption data from the USDA 1994–1996 and 1998 CSFII. As to residue levels in food, EPA assumed tolerance-level residues and 100 percent crop treated (PCT) for all existing (corn) and new uses (meat and milk commodities) of nicosulfuron.

iii. *Cancer*. Based on the lack of evidence of carcinogenicity observed in the 2–year rat and 18–month mouse carcinogenicity studies and a lack of evidence of mutagenicity in the *in vitro* and *in vivo* genotoxicity studies, EPA does not expect nicosulfuron to pose a cancer risk to humans. Therefore, an exposure assessment for evaluating cancer risk is not needed for this chemical.

iv. *Anticipated residue and PCT information*. EPA did not use anticipated residue and/or PCT information in the dietary assessment for nicosulfuron. Tolerance level residues and/or 100 PCT were assumed for all food commodities.

2. *Dietary exposure from drinking water*. The Agency used screening level water exposure models in the dietary exposure analysis and risk assessment for nicosulfuron in drinking water. These simulation models take into account data on the physical, chemical, and fate/transport characteristics of nicosulfuron. Further information regarding EPA drinking water models used in pesticide exposure assessment can be found at *http://www.epa.gov/oppefed1/models/water/index.htm*.

Based on the First Index Reservoir Screening Tool (FIRST) and Screening Concentration in Ground Water (SCI-GROW) models, the estimated drinking water concentrations (EDWCs) of nicosulfuron for chronic exposures for non-cancer assessments are estimated to be 0.685 ppb for surface water and 0.056 ppb for ground water. EDWCs of nicosulfuron for acute exposures and chronic exposures for cancer assessments are not relevant to this dietary exposure assessment as explained in unit III.C.1.

Modeled estimates of drinking water concentrations were directly entered into the dietary exposure model. For chronic dietary risk assessment, the water concentration of value 0.685 ppb was used to assess the contribution to drinking water. The surface water value was used in the chronic, non-cancer dietary risk assessment since it was higher than the ground water value and, therefore, more protective.

3. *From non-dietary exposure*. The term "residential exposure" is used in this document to refer to non-occupational, non-dietary exposure (e.g., for lawn and garden pest control, indoor pest control, termiticides, and flea and tick control on pets).

Nicosulfuron is not registered for any specific use patterns that would result in residential exposure.

4. *Cumulative effects from substances with a common mechanism of toxicity.* Section 408(b)(2)(D)(v) of FFDCA requires that, when considering whether to establish, modify, or revoke a tolerance, the Agency consider "available information" concerning the cumulative effects of a particular pesticide's residues and "other substances that have a common mechanism of toxicity."

EPA has not found nicosulfuron to share a common mechanism of toxicity with any other substances, and nicosulfuron does not appear to produce a toxic metabolite produced by other substances. For the purposes of this tolerance action, therefore, EPA has assumed that nicosulfuron does not have a common mechanism of toxicity with other substances. For information regarding EPA's efforts to determine which chemicals have a common mechanism of toxicity and to evaluate the cumulative effects of such chemicals, see EPA's website at *http://www.epa.gov/pesticides/cumulative*.

D. Safety Factor for Infants and Children

1. *In general.* Section 408(b)(2)(C) of FFDCA provides that EPA shall apply an additional tenfold (10X) margin of safety for infants and children in the case of threshold effects to account for prenatal and postnatal toxicity and the completeness of the database on toxicity and exposure unless EPA determines based on reliable data that a different margin of safety will be safe for infants and children. This additional margin of safety is commonly referred to as the FQPA SF. In applying this provision, EPA either retains the default value of 10X, or uses a different additional safety factor when reliable data available to EPA support the choice of a different factor.

2. *Prenatal and postnatal sensitivity.* In the developmental toxicity in rats, no developmental toxicity was seen at the highest dose tested (6,000 mg/kg/day). In the developmental study in rabbits, developmental toxicity (decreased fetal body weight, post-implantation loss) occurred at the same dose (500 mg/kg/day) as the dose (500 mg/kg/day) resulting in maternal toxicity (abortions, clinical signs, decreased body weight gain, post-implantation loss). In the 2-generation reproductive toxicity study in rats, F2a offspring effects (decreased litter size at birth, decreased pup weights at postpartum day 14 through 21) also occurred at the same dose (1265 mg/kg/day) as the dose (1265 mg/kg/day) resulting in parental toxicity (decreased body weight gain in F1 females during the last week of gestation). Consequently, there is no quantitative or qualitative evidence of increased susceptibility following pre- and/or postnatal exposure to nicosulfuron.

3. *Conclusion.* EPA has determined that reliable data show the safety of infants and children would be adequately protected if the FQPA SF were reduced to 1X. That decision is based on the following findings:

i. The toxicity database for nicosulfuron is adequate to assess potential pre- and/or postnatal toxicity. In accordance with 40 CFR part 158 Toxicology Data Requirements, an immunotoxicity study (870.7800), and acute and subchronic neurotoxicity studies (870.6200) are required for nicosulfuron. Despite the absence of specific immunotoxicity and neurotoxicity studies, EPA has evaluated the available toxicity data and has determined that there is no evidence that nicosulfuron either causes neurotoxic effects or targets the immune system, and, therefore, EPA does not expect that these studies will result in a lower NOAEL than the NOAEL currently used in assessing nicosulfuron risk.

ii. There is no indication that nicosulfuron is a neurotoxic chemical and there is no need for a developmental neurotoxicity study or additional UFs to account for neurotoxicity.

iii. There is no evidence that nicosulfuron results in increased susceptibility in *in utero* rats or rabbits in the prenatal developmental studies or in young rats in the 2–generation reproduction study.

iv. There are no significant residual uncertainties identified in the exposure databases for nicosulfuron. Additional storage stability studies are required for residues of nicosulfuron in grass forage and hay, and in livestock tissues. However, as explained in this Unit, EPA does not expect these studies to have a measurable impact on exposure estimates for nicosulfuron.

a. Data must be submitted on the stability of nicosulfuron and its metabolite in grass forage and hay stored frozen for intervals of up to 9.6 and 12.4 months, respectively. Interim data are available showing that residues of nicosulfuron in grass hay and forage are stable when stored frozen up to 3 months. Additionally, storage stability data are available for corn, a related crop, which indicate that nicosulfuron residues are stable when stored frozen up to 12 months. Based on these data, EPA expects nicosulfuron to be stable in grass forage and hay stored frozen for the required 9.6 and 12.4 month intervals but is requiring submission of the final study reports as confirmation.

b. Data must also be submitted on the stability of nicosulfuron and its metabolite in livestock tissues stored frozen up to 9.4 months. Despite the absence of data, EPA has assumed that nicosulfuron is stable in frozen livestock tissues, based on data for similar sulfonylurea (SU) pesticides, such as prosulfuron, where studies have shown residues to be stable for up to 25 months. In addition, EPA notes that dietary exposure to nicosulfuron is low (< 1% of the cPAD for all population subgroups), and that the contribution of residues in livestock to overall dietary exposure to nicosulfuron is minor, accounting for only 2.5% of total exposure for children 1-2 years old, the population subgroup with the highest estimated dietary exposure to nicosulfuron. Therefore, any adjustments in livestock residue estimates that might be necessary following submission of the required storage stability data would have little impact on overall dietary exposure estimates.

The dietary food exposure assessments were performed based on 100 PCT and tolerance-level residues. EPA made conservative (protective) assumptions in the ground and surface water modeling used to assess exposure to nicosulfuron in drinking water. There are no residential uses for nicosulfuron; therefore, residential exposure is not expected. These assessments will not underestimate the exposure and risks posed by nicosulfuron.

E. Aggregate Risks and Determination of Safety

EPA determines whether acute and chronic pesticide exposures are safe by comparing aggregate exposure estimates to the aPAD and cPAD. The aPAD and cPAD represent the highest safe exposures, taking into account all appropriate SFs. EPA calculates the aPAD and cPAD by dividing the POD by all applicable UFs. For linear cancer risks, EPA calculates the probability of additional cancer cases given the estimated aggregate exposure. Short-, intermediate-, and chronic-term risks are evaluated by comparing the estimated aggregate food, water, and residential exposure to the POD to ensure that the MOE called for by the product of all applicable UFs is not exceeded.

1. *Acute risk.* An acute aggregate risk assessment takes into account exposure estimates from acute dietary

consumption of food and drinking water. No adverse effect resulting from a single-oral exposure was identified and no acute dietary endpoint was selected. Therefore, nicosulfuron is not expected to pose an acute risk.

2. *Chronic risk*. Using the exposure assumptions described in this unit for chronic exposure, EPA has concluded that chronic exposure to nicosulfuron from food and water will utilize <1% of the cPAD for the general population and all population subgroups, including children 1-2 years old, the population group receiving the greatest exposure. There are no residential uses for nicosulfuron.

3. *Short-term risk*. Short-term aggregate exposure takes into account short-term residential exposure plus chronic exposure to food and water (considered to be a background exposure level).

Nicosulfuron is not registered for any use patterns that would result in residential exposure. Therefore, the short-term aggregate risk is the sum of the risk from exposure to nicosulfuron through food and water and will not be greater than the chronic aggregate risk.

4. *Intermediate-term risk*. Intermediate-term aggregate exposure takes into account intermediate-term residential exposure plus chronic exposure to food and water (considered to be a background exposure level).

Nicosulfuron is not registered for any use patterns that would result in intermediate-term residential exposure. Therefore, the intermediate-term aggregate risk is the sum of the risk from exposure to nicosulfuron through food and water, which has already been addressed, and will not be greater than the chronic aggregate risk.

5. *Aggregate cancer risk for U.S. population*. Based on a lack of evidence for carcinogenicity in mice and rats following long-term dietary administration and lack of evidence for mutagenicity in a battery of genotoxicity studies, nicosulfuron is not expected to pose a cancer risk.

6. *Determination of safety*. Based on these risk assessments, EPA concludes that there is a reasonable certainty that no harm will result to the general population or to infants and children from aggregate exposure to nicosulfuron residues.

IV. Other Considerations

A. Analytical Enforcement Methodology

Adequate enforcement methodology (high performance liquid chromatography with tandem mass spectrometric (HPLC/MS/MS) detection method) is available to enforce the tolerance expression. The method may be requested from: Chief, Analytical Chemistry Branch, Environmental Science Center, 701 Mapes Rd., Ft. Meade, MD 20755–5350; telephone number: (410) 305–2905; e-mail address: *residuemethods@epa.gov*.

B. International Residue Limits

There are currently no established Codex or Mexican maximum residue limits (MRLs) for residues of nicosulfuron. Canadian MRLs are established on blueberries and corn, and are expressed in terms of nicosulfuron. There are no Canadian MRLs established on the grass and livestock commodities associated with this petition.

C. Revisions to Petitioned-For Tolerances

EPA is not establishing the proposed tolerances for hog, fat; hog, meat; and hog, meat byproducts because there are no swine feed items associated with the proposed use on grasses, and the dietary burden to swine resulting from registered use on corn is low enough that there is no reasonable expectation of finite residues in hog commodities. The proposed tolerance for milk fat is not being established because residues did not concentrate in cream and thus the tolerance for milk will be sufficient to cover residues in milk fat from legal uses of nicosulfuron. The proposed tolerances for cattle, fat; cattle, meat; goat, fat; goat, meat; horse, fat; horse, meat; milk; sheep, fat; and sheep, meat were lowered from 0.05 ppm to the level of quantitation (LOQ) at 0.01 ppm, since the maximum adjusted residue for meat and fat was at 0.008 ppm.

EPA has also revised the tolerance expression for all existing and new nicosulfuron tolerances. The revised tolerance expression makes clear that the tolerances cover "residues of nicosulfuron, including its metabolites and degradates" and that compliance with the tolerance levels will be determined by measuring only nicosulfuron, 3-Pyridinecarboxamide, 2-[[[[(4,6-dimethoxy-2-pyrimidinyl)amino] carbonyl]amino]sulfonyl]-N,N-dimethyl-. EPA has determined that it is reasonable to make this change in the tolerance expression final without prior proposal and opportunity for comment, because public comment is not necessary, in that the change has no substantive effect on the tolerance, but rather is merely intended to clarify the existing tolerance expression.

Finally, EPA is removing the redundant and obsolete tolerance for residues of nicosulfuron on "corn, forage" at 0.1 ppm. "Corn, forage" is an obsolete commodity term that has been replaced by the terms "corn, field, forage" and "corn, sweet, forage." Since there are existing tolerances for residues of nicosulfuron on "corn, field, forage" and "corn, sweet, forage" at 0.1 ppm, the tolerance on "corn, forage" at the same level is unnecessary. EPA is making this change final without prior proposal and opportunity for comment because it merely corrects a redundancy in the nicosulfuron tolerances and has no substantive effect on them.

V. Conclusion

Therefore, tolerances are established for residues of nicosulfuron, including its metabolites and degradates, in or on cattle, fat at 0.01 ppm; cattle, meat at 0.01 ppm; cattle, meat byproducts at 0.05 ppm; goat, fat at 0.01 ppm; goat, meat at 0.01 ppm; goat, meat byproducts at 0.05 ppm; grass, forage at 9.0 ppm; grass, hay at 25.0 ppm; horse, fat at 0.01 ppm; horse, meat at 0.01 ppm; horse, meat byproducts at 0.05 ppm; milk at 0.01 ppm; sheep, fat at 0.01 ppm; sheep, meat at 0.01 ppm; and sheep, meat byproducts at 0.05 ppm.

VI. Statutory and Executive Order Reviews

This final rule establishes tolerances under section 408(d) of FFDCA in response to a petition submitted to the Agency. The Office of Management and Budget (OMB) has exempted these types of actions from review under Executive Order 12866, entitled *Regulatory Planning and Review* (58 FR 51735, October 4, 1993). Because this final rule has been exempted from review under Executive Order 12866, this final rule is not subject to Executive Order 13211, entitled *Actions Concerning Regulations That Significantly Affect Energy Supply, Distribution, or Use* (66 FR 28355, May 22, 2001) or Executive Order 13045, entitled *Protection of Children from Environmental Health Risks and Safety Risks* (62 FR 19885, April 23, 1997). This final rule does not contain any information collections subject to OMB approval under the Paperwork Reduction Act (PRA), 44 U.S.C. 3501 *et seq.*, nor does it require any special considerations under Executive Order 12898, entitled *Federal Actions to Address Environmental Justice in Minority Populations and Low-Income Populations* (59 FR 7629, February 16, 1994).

Since tolerances and exemptions that are established on the basis of a petition under section 408(d) of FFDCA, such as the tolerance in this final rule, do not require the issuance of a proposed rule, the requirements of the Regulatory

Flexibility Act (RFA) (5 U.S.C. 601 *et seq.*) do not apply.

This final rule directly regulates growers, food processors, food handlers, and food retailers, not States or tribes, nor does this action alter the relationships or distribution of power and responsibilities established by Congress in the preemption provisions of section 408(n)(4) of FFDCA. As such, the Agency has determined that this action will not have a substantial direct effect on States or tribal governments, on the relationship between the national government and the States or tribal governments, or on the distribution of power and responsibilities among the various levels of government or between the Federal Government and Indian tribes. Thus, the Agency has determined that Executive Order 13132, entitled *Federalism* (64 FR 43255, August 10, 1999) and Executive Order 13175, entitled *Consultation and Coordination with Indian Tribal Governments* (65 FR 67249, November 9, 2000) do not apply to this final rule. In addition, this final rule does not impose any enforceable duty or contain any unfunded mandate as described under Title II of the Unfunded Mandates Reform Act of 1995 (UMRA) (Public Law 104–4).

This action does not involve any technical standards that would require Agency consideration of voluntary consensus standards pursuant to section 12(d) of the National Technology Transfer and Advancement Act of 1995 (NTTAA), Public Law 104–113, section 12(d) (15 U.S.C. 272 note).

VII. Congressional Review Act

The Congressional Review Act, 5 U.S.C. 801 *et seq.*, generally provides that before a rule may take effect, the agency promulgating the rule must submit a rule report to each House of the Congress and to the Comptroller General of the United States. EPA will submit a report containing this rule and other required information to the U.S. Senate, the U.S. House of Representatives, and the Comptroller General of the United States prior to publication of this final rule in the **Federal Register**. This final rule is not a "major rule" as defined by 5 U.S.C. 804(2).

List of Subjects in 40 CFR Part 180

Environmental protection, Administrative practice and procedure, Agricultural commodities, Pesticides and pests, Reporting and recordkeeping requirements.

Dated: March 26, 2010.

Lois Rossi,

Director, Registration Division, Office of Pesticide Programs.

■ Therefore, 40 CFR chapter I is amended as follows:

PART 180—[AMENDED]

■ 1. The authority citation for part 180 continues to read as follows:

Authority: 21 U.S.C. 321(q), 346a and 371.

■ 2. Section 180.454 is revised to read as follows:

§ 180.454 Nicosulfuron; tolerances for residues.

(a) *General*. Tolerances are established for residues of the herbicide nicosulfuron, including its metabolites and degradates, in or on the commodities in the following table [below]. Compliance with the tolerance levels specified in the following table [below] is to be determined by measuring only nicosulfuron, 3-Pyridinecarboxamide, 2-[[[[(4,6-dimethoxy-2-pyrimidinyl)amino] carbonyl]amino]sulfonyl]-N,N-dimethyl-.

Commodity	Parts per million
Cattle, fat	0.01
Cattle, meat	0.01
Cattle, meat byproducts	0.05
Corn, field, forage	0.1
Corn, field, grain	0.1
Corn, field, stover	0.1
Corn, pop, grain	0.1
Corn, pop, stover	0.1
Corn, sweet, forage	0.1
Corn, sweet, kernel plus cob with husks removed	0.1
Corn, sweet, stover	0.1
Goat, fat	0.01
Goat, meat	0.01
Goat, meat byproducts	0.05
Grass, forage	9.0
Grass, hay	25.0
Horse, fat	0.01
Horse, meat	0.01
Horse, meat byproducts	0.05
Milk	0.01
Sheep, fat	0.01
Sheep, meat	0.01
Sheep, meat byproducts	0.05

(b) *Section 18 emergency exemptions*. Time-limited tolerances specified in the following table [below] are established for residues of the herbicide nicosulfuron, 3-Pyridinecarboxamide, 2-[[[[(4,6-dimethoxy-2-pyrimidinyl)amino] carbonyl]amino]sulfonyl]-N,N-dimethyl-, in or on the specified agricultural commodities, resulting from use of the pesticide pursuant to FFIFRA section 18 emergency exemptions. The tolerances expire and are revoked on the date specified in the table.

Commodity	Parts per million	Expiration/ Revokation Date
Bermuda grass, forage	10	12/31/11
Bermuda grass, hay	25	12/31/11

(c) *Tolerances with regional registrations.* [Reserved]

(d) *Indirect or inadvertent residues.* [Reserved]

[FR Doc. 2010–7745 Filed 4–6–10; 8:45 am]

BILLING CODE 6560–50–S

ENVIRONMENTAL PROTECTION AGENCY

40 CFR Part 180

[EPA–HQ–OPP–2009–0141; FRL–8808–9]

Aminopyralid; Pesticide Tolerances

AGENCY: Environmental Protection Agency (EPA).

ACTION: Final rule.

SUMMARY: This regulation establishes tolerances for residues of aminopyralid, including its metabolites and degradates, in or on corn, field, forage; corn, field, grain; and corn, field, stover. Dow AgroSciences requested these tolerances under the Federal Food, Drug, and Cosmetic Act (FFDCA).

DATES: This regulation is effective April 7, 2010. Objections and requests for hearings must be received on or before June 7, 2010, and must be filed in accordance with the instructions provided in 40 CFR part 178 (see also Unit I.C. of the **SUPPLEMENTARY INFORMATION**).

ADDRESSES: EPA has established a docket for this action under docket identification (ID) number EPA–HQ–OPP–2009–0141. All documents in the docket are listed in the docket index available at *http://www.regulations.gov*. Although listed in the index, some information is not publicly available, e.g., Confidential Business Information (CBI) or other information whose disclosure is restricted by statute. Certain other material, such as copyrighted material, is not placed on the Internet and will be publicly available only in hard copy form. Publicly available docket materials are available in the electronic docket at *http://www.regulations.gov*, or, if only available in hard copy, at the OPP Regulatory Public Docket in Rm. S–4400, One Potomac Yard (South Bldg.), 2777 S. Crystal Dr., Arlington, VA. The Docket Facility is open from 8:30 a.m. to 4 p.m., Monday through Friday, excluding legal holidays. The Docket Facility telephone number is (703) 305–5805.

FOR FURTHER INFORMATION CONTACT: Susan Stanton, Registration Division (7505P), Office of Pesticide Programs, Environmental Protection Agency, 1200 Pennsylvania Ave., NW., Washington, DC 20460–0001; telephone number: (703) 305–5218; e-mail address: *stanton.susan@epa.gov*.

SUPPLEMENTARY INFORMATION:

I. General Information

A. Does this Action Apply to Me?

You may be potentially affected by this action if you are an agricultural producer, food manufacturer, or pesticide manufacturer. Potentially affected entities may include, but are not limited to those engaged in the following activities:

- Crop production (NAICS code 111).
- Animal production (NAICS code 112).
- Food manufacturing (NAICS code 311).
- Pesticide manufacturing (NAICS code 32532).

This listing is not intended to be exhaustive, but rather to provide a guide for readers regarding entities likely to be affected by this action. Other types of entities not listed in this unit could also be affected. The North American Industrial Classification System (NAICS) codes have been provided to assist you and others in determining whether this action might apply to certain entities. If you have any questions regarding the applicability of this action to a particular entity, consult the person listed under **FOR FURTHER INFORMATION CONTACT**.

B. How Can I Get Electronic Access to Other Related Information?

You may access a frequently updated electronic version of EPA's tolerance regulations at 40 CFR part 180 through the Government Printing Office's e-CFR cite at *http://www.gpoaccess.gov/ecfr*. To access the OPPTS harmonized test guidelines referenced in this document electronically, please go to *http://www.epa.gov/oppts* and select "Test Methods & Guidelines" on the left-side navigation menu.

C. Can I File an Objection or Hearing Request?

Under section 408(g) of FFDCA, 21 U.S.C. 346a, any person may file an objection to any aspect of this regulation and may also request a hearing on those objections. You must file your objection or request a hearing on this regulation in accordance with the instructions provided in 40 CFR part 178. To ensure proper receipt by EPA, you must identify docket ID number EPA–HQ–OPP–2009–0141 in the subject line on the first page of your submission. All requests must be in writing, and must be mailed or delivered to the Hearing Clerk as required by 40 CFR part 178 on or before June 7, 2010.

In addition to filing an objection or hearing request with the Hearing Clerk as described in 40 CFR part 178, please submit a copy of the filing that does not contain any CBI for inclusion in the public docket that is described in **ADDRESSES**. Information not marked confidential pursuant to 40 CFR part 2 may be disclosed publicly by EPA without prior notice. Submit this copy, identified by docket ID number EPA–HQ–OPP–2009–0141, by one of the following methods:

- *Federal eRulemaking Portal*: *http://www.regulations.gov*. Follow the on-line instructions for submitting comments.
- *Mail*: Office of Pesticide Programs (OPP) Regulatory Public Docket (7502P), Environmental Protection Agency, 1200 Pennsylvania Ave., NW., Washington, DC 20460–0001.
- *Delivery*: OPP Regulatory Public Docket (7502P), Environmental Protection Agency, Rm. S–4400, One Potomac Yard (South Bldg.), 2777 S. Crystal Dr., Arlington, VA. Deliveries are only accepted during the Docket Facility's normal hours of operation (8:30 a.m. to 4 p.m., Monday through Friday, excluding legal holidays). Special arrangements should be made for deliveries of boxed information. The Docket Facility telephone number is (703) 305–5805.

II. Petition for Tolerance

In the **Federal Register** of May 6, 2009 (74 FR 20947) (FRL–8412–7), EPA issued a notice pursuant to section 408(d)(3) of FFDCA, 21 U.S.C. 346a(d)(3), announcing the filing of a pesticide petition (PP 8F7455) by Dow AgroSciences, 9330 Zionsville Rd., Indianapolis, IN 46268. The petition requested that 40 CFR 180.610 be amended by establishing tolerances for combined residues of the herbicide aminopyralid, 4-amino-3,6-dichloro-2-pyridinecarboxylic acid, and its glucose conjugate, expressed as total parent, in or on corn, forage at 0.30 parts per million (ppm); corn, grain at 0.20 ppm; and corn, stover at 0.20 ppm. That notice referenced a summary of the petition prepared by Dow AgroSciences, the registrant, which is available to the public in the docket, *http://www.regulations.gov*. Comments were

received on the notice of filing. EPA's response to these comments is discussed in Unit IV.C.

Based upon review of the data supporting the petition, EPA has revised the corn commodity terminology and tolerance expression for aminopyralid. The reasons for these changes are explained in Unit IV.D.

III. Aggregate Risk Assessment and Determination of Safety

Section 408(b)(2)(A)(i) of FFDCA allows EPA to establish a tolerance (the legal limit for a pesticide chemical residue in or on a food) only if EPA determines that the tolerance is "safe." Section 408(b)(2)(A)(ii) of FFDCA defines "safe" to mean that "there is a reasonable certainty that no harm will result from aggregate exposure to the pesticide chemical residue, including all anticipated dietary exposures and all other exposures for which there is reliable information." This includes exposure through drinking water and in residential settings, but does not include occupational exposure. Section 408(b)(2)(C) of FFDCA requires EPA to give special consideration to exposure of infants and children to the pesticide chemical residue in establishing a tolerance and to "ensure that there is a reasonable certainty that no harm will result to infants and children from aggregate exposure to the pesticide chemical residue."

Consistent with section 408(b)(2)(D) of FFDCA, and the factors specified in section 408(b)(2)(D) of FFDCA, EPA has reviewed the available scientific data and other relevant information in support of this action. EPA has sufficient data to assess the hazards of and to make a determination on aggregate exposure for the petitioned-for tolerances for residues of aminopyralid, including its metabolites and degradates, on corn, field, forage at 0.30 ppm; corn, field, grain at 0.20 ppm; and corn, field, stover at 0.20 ppm. EPA's assessment of exposures and risks associated with establishing tolerances follows.

A. Toxicological Profile

EPA has evaluated the available toxicity data and considered its validity, completeness, and reliability as well as the relationship of the results of the studies to human risk. EPA has also considered available information concerning the variability of the sensitivities of major identifiable subgroups of consumers, including infants and children.

The toxicology database for aminopyralid includes toxicity studies conducted with the acid (XDE-750) and the triisopropanolammonium (TIPA) salt (GF-871). The acute toxicity data indicate that both the acid and salt have low toxicity via oral, dermal, and inhalation routes of exposure; and that neither is a skin irritant or skin sensitizer. The TIPA salt is not irritating to the eye; however, aminopyralid acid is severely irritating to the eye.

Longer term studies indicate that the stomach, ileum, and cecum are targets for aminopyralid. In a subchronic feeding study in rats (XDE-750), hyperplasia of the mucosal epithelium of the ileum and cecum was observed at the highest dose tested (HDT) of 1,000 milligrams/kilograms/day (mg/kg/day). Chronic exposure in rats (XDE-750) also resulted in hyperplasia of the mucosal epithelium, along with cecal enlargement and decreased body weights at a lower dose of 500 mg/kg/day. Hypertrophy and hyperplasia of the mucosal epithelium were seen after subchronic exposure in dogs (XDE-750) at the HDT of 929 mg/kg/day. Thickening of the stomach mucosa (females), hyperplasia and hypertrophy of the mucosal epithelium, slight lymphoid hyperplasia of the gastric mucosa, and very slight/slight chronic mucosal inflammation were observed in dogs after chronic exposure at the HDT of 967 mg/kg/day. No adverse effects were observed in subchronic or chronic feeding studies in mice.

Stomach effects were also observed in a developmental toxicity study in rabbits conducted with the acid (XDE-750). Ulcers and erosions were seen in the glandular mucosa of the stomach at 500 mg/kg/day in maternal animals. Other effects noted were decreased body weights and incoordinated gait. No developmental effects were seen in fetuses at 500 mg/kg/day. The high dose group was removed from the study because of the severity of the clinical signs that were observed (incoordinated gait, significant body weight losses, and decreased food intake). In another developmental rabbit study conducted with the TIPA salt (GF-871), severe inanition (exhaustion from lack of food), body weight loss, decreased fecal output, and incoordinated gait were observed at 260 mg/kg/day. At 520 mg/kg/day, decreased fetal body weights were observed. No effects were noted in developmental toxicity studies in rats with XDE-750 or GF-871 or a reproduction study in rats with XDE-750. There was no qualitative or quantitative evidence of increased susceptibility of fetuses or offspring in any of the developmental and reproduction toxicity studies conducted with aminopyralid.

No systemic toxic effects were observed in a 28–day dermal toxicity study in rats with XDE-750; however, dermal toxicity was indicated by slight epidermal hyperplasia in males at 1,000 mg/kg/day.

In an acute neurotoxicity study in rats (XDE-750), fecal soiling in males and urine soiling in females were observed at 2,000 mg/kg/day. No adverse effects were observed in a chronic neurotoxicity study in rats up to 1,000 mg/kg/day.

Aminopyralid is classified as "not likely to be carcinogenic to humans." No increase in any tumors was found in carcinogenicity studies in rats and mice. Aminopyralid was negative in all mutagenicity studies, except for an *in vitro* chromosome aberration assay in Sprague Dawley rats. In this assay, XDE-750 induced chromosome aberrations, but only at cytotoxic concentrations. The clastogenic response was induced secondarily to toxicity.

Specific information on the studies received and the nature of the adverse effects caused by aminopyralid as well as the no-observed-adverse-effect-level (NOAEL) and the lowest-observed-adverse-effect-level (LOAEL) from the toxicity studies can be found at *http://www.regulations.gov* in the document "*Aminopyralid. Human Health Risk Assessment for the Proposed Use on Field Corn (PP#8F7455)*" at page 40 in docket ID number EPA–HQ–OPP–2009–0141.

B. Toxicological Endpoints

For hazards that have a threshold below which there is no appreciable risk, a toxicological point of departure (POD) is identified as the basis for derivation of reference values for risk assessment. The POD may be defined as the highest dose at which no adverse effects are observed (the NOAEL) in the toxicology study identified as appropriate for use in risk assessment. However, if a NOAEL cannot be determined, the lowest dose at which adverse effects of concern are identified (the LOAEL) or a benchmark dose (BMD) approach is sometimes used for risk assessment. Uncertainty/safety factors (UFs) are used in conjunction with the POD to take into account uncertainties inherent in the extrapolation from laboratory animal data to humans and in the variations in sensitivity among members of the human population as well as other unknowns. Safety is assessed for acute and chronic dietary risks by comparing aggregate food and water exposure to the pesticide to the acute population adjusted dose (aPAD) and chronic population adjusted dose (cPAD). The

aPAD and cPAD are calculated by dividing the POD by all applicable UFs. Aggregate short-, intermediate-, and chronic-term risks are evaluated by comparing food, water, and residential exposure to the POD to ensure that the margin of exposure (MOE) called for by the product of all applicable UFs is not exceeded. This latter value is referred to as the level of concern (LOC).

For non-threshold risks, the Agency assumes that any amount of exposure will lead to some degree of risk. Thus, the Agency estimates risk in terms of the probability of an occurrence of the adverse effect greater than that expected in a lifetime. For more information on the general principles EPA uses in risk characterization and a complete description of the risk assessment process, see *http://www.epa.gov/pesticides/factsheets/riskassess.htm*.

A summary of the toxicological endpoints for aminopyralid used for human risk assessment can be found at *http://www.regulations.gov* in the document "*Aminopyralid: Human Health Risk Assessment for the Proposed Use on Field Corn (PP#8F7455)*" at page 20 in docket ID number EPA–HQ–OPP–2009–0141.

C. Exposure Assessment

1. *Dietary exposure from food and feed uses*. In evaluating dietary exposure to aminopyralid, EPA considered exposure under the petitioned-for tolerances as well as all existing aminopyralid tolerances in 40 CFR 180.610. EPA assessed dietary exposures from aminopyralid in food as follows:

i. *Acute exposure*. Quantitative acute dietary exposure and risk assessments are performed for a food-use pesticide, if a toxicological study has indicated the possibility of an effect of concern occurring as a result of a 1–day or single exposure. No such effects were identified in the toxicological studies for aminopyralid; therefore, a quantitative acute dietary exposure assessment is unnecessary.

ii. *Chronic exposure*. In conducting the chronic dietary exposure assessment EPA used the food consumption data from the U.S. Department of Agriculture (USDA) 1994–1996 and 1998 Continuing Survey of Food Intake by Individuals (CSFII). As to residue levels in food, EPA assumed that residues are present in all commodities at the tolerance level and that 100% of commodities are treated with aminopyralid. The Dietary Exposure Evaluation Model (DEEM)(tm) 7.81 default concentration factors were used to estimate residues of aminopyralid in processed commodities.

iii. *Cancer*. Based on the results of carcinogenicity studies in rats and mice, EPA classified aminopyralid as "not likely to be carcinogenic to humans." Therefore, an exposure assessment to evaluate cancer risk is unnecessary for this chemical.

iv. *Anticipated residue and percent crop treated (PCT) information*. EPA did not use anticipated residue or PCT information in the dietary assessment for aminopyralid. Tolerance level residues and 100 PCT were assumed for all food commodities.

2. *Dietary exposure from drinking water*. The Agency used screening level water exposure models in the dietary exposure analysis and risk assessment for aminopyralid in drinking water. These simulation models take into account data on the physical, chemical, and fate/transport characteristics of aminopyralid. Further information regarding EPA drinking water models used in pesticide exposure assessment can be found at *http://www.epa.gov/oppefed1/models/water/index.htm*.

Based on the First Index Reservoir Screening Tool (FIRST) and Screening Concentration in Ground Water (SCI-GROW) models, the estimated drinking water concentrations (EDWCs) of aminopyralid for chronic exposures for non-cancer assessments (the only dietary exposure scenario of concern for aminopyralid) are estimated to be 1.937 parts per billion (ppb) for surface water and 0.63 ppb for ground water.

Modeled estimates of drinking water concentrations were directly entered into the dietary exposure model. For chronic dietary risk assessment, the water concentration of value 1.937 ppb was used to assess the contribution to drinking water.

3. *From non-dietary exposure*. The term "residential exposure" is used in this document to refer to non-occupational, non-dietary exposure (e.g., for lawn and garden pest control, indoor pest control, termiticides, and flea and tick control on pets).

Aminopyralid is currently registered for the following uses that could result in residential exposures: Natural recreation areas, such as wildlife management areas, campgrounds, trailheads and trails. EPA assessed residential exposure using the following assumptions:

Aminopyralid is not applied by homeowners to residential or recreational settings; therefore, only post-application residential exposures were considered. A dermal endpoint of concern has not been identified for aminopyralid and postapplication inhalation exposure following treatment of recreation areas is expected to be negligible for adults and children. There is, however, the potential for short-term postapplication oral exposure of children playing in areas treated with aminopyralid. EPA assessed the following incidental oral exposure scenarios: Hand-to-mouth transfer of residues; object-to-mouth transfer of residues; and ingestion of soil containing aminopyralid residues.

4. *Cumulative effects from substances with a common mechanism of toxicity*. Section 408(b)(2)(D)(v) of FFDCA requires that, when considering whether to establish, modify, or revoke a tolerance, the Agency consider "available information" concerning the cumulative effects of a particular pesticide's residues and "other substances that have a common mechanism of toxicity."

EPA has not found aminopyralid to share a common mechanism of toxicity with any other substances, and aminopyralid does not appear to produce a toxic metabolite produced by other substances. For the purposes of this tolerance action, therefore, EPA has assumed that aminopyralid does not have a common mechanism of toxicity with other substances. For information regarding EPA's efforts to determine which chemicals have a common mechanism of toxicity and to evaluate the cumulative effects of such chemicals, see EPA's website at *http://www.epa.gov/pesticides/cumulative*.

D. Safety Factor for Infants and Children

1. *In general*. Section 408(b)(2)(C) of FFDCA provides that EPA shall apply an additional tenfold (10X) margin of safety for infants and children in the case of threshold effects to account for prenatal and postnatal toxicity and the completeness of the database on toxicity and exposure unless EPA determines based on reliable data that a different margin of safety will be safe for infants and children. This additional margin of safety is commonly referred to as the Food Quality Protection Act Safety Factors (FQPA SF). In applying this provision, EPA either retains the default value of 10X, or uses a different additional safety factor when reliable data available to EPA support the choice of a different factor.

2. *Prenatal and postnatal sensitivity*. The prenatal and postnatal toxicity database for aminopyralid includes harmonized guideline rat and rabbit developmental toxicity studies for both the acid and TIPA salt of aminopyralid and a two-generation reproduction toxicity study in rats conducted using aminopyralid acid. As discussed in Unit III.A (Toxicological Profile), there is no

quantitative or qualitative evidence of increased susceptibility of fetuses or offspring in any of these studies.

3. *Conclusion*. EPA has determined that reliable data show the safety of infants and children would be adequately protected if the FQPA SF were reduced to 1X. That decision is based on the following findings:

i. The toxicity database for aminopyralid is adequate to assess pre- and postnatal toxicity. In accordance with 40 CFR part 158 Toxicology Data requirements, an immunotoxicity study (guideline 870.7800) is required for aminopyralid. In the absence of specific immunotoxicity studies, EPA has evaluated the available aminopyralid data to determine whether an additional uncertainty factor is needed to account for potential immunotoxicity. The toxicology database for aminopyralid does not show any evidence of treatment-related effects on the immune system. The overall weight-of-evidence suggests that this chemical does not directly target the immune system, and the Agency does not believe that conducting a functional immunotoxicity study will result in a lower POD than that currently used for overall risk assessment. Therefore, a database uncertainty factor (UFDB) is not needed to account for the lack of this study.

ii. No evidence of neurotoxicity was observed in acute or chronic neurotoxicity studies. Incoordinated gait, along with a lack of ambulatory movement, was observed in developmental toxicity studies (XDE-750 and GF-871) in rabbits at 500 mg/kg/day. However, the incoordination was transient (complete resolution within 2 hours postdosing) and considered to be a result of frank toxicity, rather than a neurotoxic event. Additionally, no signs of neurotoxicity were observed in other toxicity studies, and no evidence of quantitative or qualitative susceptibility was observed in developmental toxicity studies in rats or rabbits or a reproduction study in rats. Based on these findings, EPA has concluded that there is no need for a developmental neurotoxicity study or additional UFs to account for neurotoxicity.

iii. There is no evidence that aminopyralid results in increased susceptibility in *in utero* rats or rabbits in the prenatal developmental studies or offspring in the 2–generation reproduction study.

iv. There are no residual uncertainties identified in the exposure databases. The dietary food exposure assessments were performed based on 100 PCT and tolerance-level residues. EPA made conservative (protective) assumptions in the ground and surface water modeling used to assess exposure to aminopyralid in drinking water. EPA used similarly conservative assumptions to assess postapplication exposure of children as well as incidental oral exposure of toddlers. These assessments will not underestimate the exposure and risks posed by aminopyralid.

E. Aggregate Risks and Determination of Safety

EPA determines whether acute and chronic pesticide exposures are safe by comparing aggregate exposure estimates to the aPAD and cPAD. The aPAD and cPAD represent the highest safe exposures, taking into account all appropriate SFs. EPA calculates the aPAD and cPAD by dividing the POD by all applicable UFs. For linear cancer risks, EPA calculates the probability of additional cancer cases given the estimated aggregate exposure. Short-, intermediate-, and chronic-term risks are evaluated by comparing the estimated aggregate food, water, and residential exposure to the POD to ensure that the MOE called for by the product of all applicable UFs is not exceeded.

1. *Acute risk*. An acute aggregate risk assessment takes into account exposure estimates from acute dietary consumption of food and drinking water. No adverse effect resulting from a single-oral exposure was identified and no acute dietary endpoint was selected. Therefore, aminopyralid is not expected to pose an acute risk.

2. *Chronic risk*. Using the exposure assumptions described in this unit for chronic exposure, EPA has concluded that chronic exposure to aminopyralid from food and water will utilize <1% of the cPAD for the general U.S. population and all population subgroups, including children 1 to 2 years old, the population group receiving the greatest exposure. Based on the explanation in Unit III.C.3., regarding residential use patterns, chronic residential exposure to residues of aminopyralid is not expected.

3. *Short-term risk*. Short-term aggregate exposure takes into account short-term residential exposure plus chronic exposure to food and water (considered to be a background exposure level). Aminopyralid is currently registered for uses that could result in short-term residential exposure and the Agency has determined that it is appropriate to aggregate chronic exposure through food and water with short-term residential exposures to aminopyralid.

Using the exposure assumptions described in this unit for short-term exposures, EPA has concluded the combined short-term food, water, and residential exposures aggregated result in aggregate MOEs of between 25,000 and 33,000 for children's population subgroups. The aggregate MOEs include dietary exposures from food and drinking water as well as postapplication incidental oral exposure of children and toddlers playing in recreational areas treated with aminopyralid. Although short-term residential postapplication exposure of adults could result from the use of aminopyralid, inhalation exposures are expected to be negligible and a dermal endpoint of concern has not been identified for aminopyralid. Therefore, the short-term aggregate risk for adults is the sum of the risk from exposure to aminopyralid through food and water, which has already been addressed, and will not be greater than the chronic aggregate risk.

4. *Intermediate-term risk*. Intermediate-term aggregate exposure takes into account intermediate-term residential exposure plus chronic exposure to food and water (considered to be a background exposure level). Aminopyralid is not registered for any use patterns that would result in intermediate-term residential exposure. Therefore, the intermediate-term aggregate risk is the sum of the risk from exposure to aminopyralid through food and water, which has already been addressed, and will not be greater than the chronic aggregate risk.

5. *Aggregate cancer risk for U.S. population*. Based on a lack of evidence for carcinogenicity in mice and rats following long-term dietary administration, aminopyralid is not expected to pose a cancer risk.

6. *Determination of safety*. Based on these risk assessments, EPA concludes that there is a reasonable certainty that no harm will result to the general population, or to infants and children from aggregate exposure to aminopyralid residues.

IV. Other Considerations

A. Analytical Enforcement Methodology

Adequate enforcement methodology, Liquid Chromatography/Mass Spectrometry/Mass Spectrometry (LC/MS/MS), Method GRM 07.07, is available to enforce the tolerance expression. The method may be requested from: Chief, Analytical Chemistry Branch, Environmental Science Center, 701 Mapes Rd., Ft. Meade, MD 20755–5350; telephone number: (410) 305–2905; e-mail address: *residuemethods@epa.gov*.

B. International Residue Limits

No Codex, Canadian or Mexican MRLs have been established for corn commodities.

C. Response to Comments

EPA received comments from an anonymous submitter objecting to pesticides and other "toxic" chemicals generally and recommending against any tolerances greater than zero for this product. The Agency understands the commenter's concerns and recognizes that some individuals believe that pesticides should be banned completely. However, the existing legal framework provided by section 408 of the FFDCA contemplates that tolerances greater than zero may be set when persons seeking such tolerances or exemptions have demonstrated that the pesticide meets the safety standard imposed by that statute. This submitter's comments appear to be directed at the underlying statute and not EPA's implementation of it; the citizen has made no contention that EPA has acted in violation of the statutory framework.

D. Revisions to Petitioned-For Tolerances

EPA has revised the commodity terms "corn, forage," "corn, grain," and "corn, stover," to read "corn, field, forage," "corn, field, grain," and "corn, field, stover" to agree with the Agency's Food and Feed Commodity Vocabulary.

EPA is also revising the tolerance expression for existing tolerances and the new tolerances on corn commodities to clarify the chemical moieties that are covered by the tolerances and specify how compliance with the tolerances is to be measured. Plant tolerances are currently expressed in terms of "free and conjugated residues of the herbicide aminopyralid, 2-pyridine carboxylic acid, 4-amino-3,6-dichloro-, calculated as aminopyralid." Livestock tolerances are currently expressed in terms of "residues of the herbicide aminopyralid." The tolerance expression for plants is being revised to make clear that the tolerances cover residues of aminopyralid, 4-amino-3,6-dichloro-2-pyridinecarboxylic acid, including its metabolites and degradates. Compliance with the tolerances is to be determined by measuring only free and conjugated aminopyralid. Similarly, the tolerance expression for livestock commodities is being revised to clarify that the tolerances cover residues of aminopyralid, including its metabolites and degradates, but that compliance with the tolerance levels will be determined by measuring only aminopyralid.

EPA has determined that it is reasonable to make these changes final without prior proposal and opportunity for comment, because public comment is not necessary, in that the changes have no substantive effect on the tolerances, but rather are merely intended to clarify the existing tolerance expressions.

V. Conclusion

Therefore, tolerances are established for residues of aminopyralid, 4-amino-3,6-dichloro-2-pyridinecarboxylic acid, including its metabolites and degradates, in or on corn, field, forage at 0.30 ppm; corn, field, grain at 0.20 ppm; and corn, field, stover at 0.20 ppm. Compliance with these tolerance levels is to be determined by measuring only free and conjugated aminopyralid.

VI. Statutory and Executive Order Reviews

This final rule establishes tolerances under section 408(d) of FFDCA in response to a petition submitted to the Agency. The Office of Management and Budget (OMB) has exempted these types of actions from review under Executive Order 12866, entitled *Regulatory Planning and Review* (58 FR 51735, October 4, 1993). Because this final rule has been exempted from review under Executive Order 12866, this final rule is not subject to Executive Order 13211, entitled *Actions Concerning Regulations That Significantly Affect Energy Supply, Distribution, or Use* (66 FR 28355, May 22, 2001) or Executive Order 13045, entitled *Protection of Children from Environmental Health Risks and Safety Risks* (62 FR 19885, April 23, 1997). This final rule does not contain any information collections subject to OMB approval under the Paperwork Reduction Act (PRA), 44 U.S.C. 3501 *et seq.*, nor does it require any special considerations under Executive Order 12898, entitled *Federal Actions to Address Environmental Justice in Minority Populations and Low-Income Populations* (59 FR 7629, February 16, 1994).

Since tolerances and exemptions that are established on the basis of a petition under section 408(d) of FFDCA, such as the tolerance in this final rule, do not require the issuance of a proposed rule, the requirements of the Regulatory Flexibility Act (RFA) (5 U.S.C. 601 *et seq.*) do not apply.

This final rule directly regulates growers, food processors, food handlers, and food retailers, not States or tribes, nor does this action alter the relationships or distribution of power and responsibilities established by Congress in the preemption provisions of section 408(n)(4) of FFDCA. As such, the Agency has determined that this action will not have a substantial direct effect on States or tribal governments, on the relationship between the national government and the States or tribal governments, or on the distribution of power and responsibilities among the various levels of government or between the Federal Government and Indian tribes. Thus, the Agency has determined that Executive Order 13132, entitled *Federalism* (64 FR 43255, August 10, 1999) and Executive Order 13175, entitled *Consultation and Coordination with Indian Tribal Governments* (65 FR 67249, November 9, 2000) do not apply to this final rule. In addition, this final rule does not impose any enforceable duty or contain any unfunded mandate as described under Title II of the Unfunded Mandates Reform Act of 1995 (UMRA) (Public Law 104–4).

This action does not involve any technical standards that would require Agency consideration of voluntary consensus standards pursuant to section 12(d) of the National Technology Transfer and Advancement Act of 1995 (NTTAA), Public Law 104–113, section 12(d) (15 U.S.C. 272 note).

VII. Congressional Review Act

The Congressional Review Act, 5 U.S.C. 801 *et seq.*, generally provides that before a rule may take effect, the agency promulgating the rule must submit a rule report to each House of the Congress and to the Comptroller General of the United States. EPA will submit a report containing this rule and other required information to the U.S. Senate, the U.S. House of Representatives, and the Comptroller General of the United States prior to publication of this final rule in the **Federal Register**. This final rule is not a "major rule" as defined by 5 U.S.C. 804(2).

List of Subjects in 40 CFR Part 180

Environmental protection, Administrative practice and procedure, Agricultural commodities, Pesticides and pests, Reporting and recordkeeping requirements.

Dated: March 26, 2010.

Lois Rossi,

Director, Registration Division, Office of Pesticide Programs.

■ Therefore, 40 CFR chapter I is amended as follows:

PART 180—[AMENDED]

■ 1. The authority citation for part 180 continues to read as follows:

Authority: 21 U.S.C. 321(q), 346a and 371.

■ 2. Section 180.610 is amended by revising the introductory text in paragraphs (a)(1) and (a)(2) and alphabetically adding commodities to the table in paragraph (a)(1) to read as follows:

§ 180.610 Aminopyralid; tolerances for residues.

(a) * * * (1) Tolerances are established for residues of the herbicide aminopyralid, 4-amino-3,6-dichloro-2-pyridinecarboxylic acid, including its metabolites and degradates, in or on the commodities in the table below. Compliance with the tolerance levels specified below is to be determined by measuring only free and conjugated aminopyralid.

Commodity	Parts per million
Corn, field, forage	0.30
Corn, field, grain	0.20
Corn, field, stover	0.20
* * * *	*

(2) Tolerances are established for residues of the herbicide aminopyralid, 4-amino-3,6-dichloro-2-pyridinecarboxylic acid, including its metabolites and degradates, in or on the commodities in the table below. Compliance with the tolerance levels specified below is to be determined by measuring only aminopyralid.

* * * * *

[FR Doc. 2010–7749 Filed 4–6–10; 8:45 am]

BILLING CODE 6560–50–S

FEDERAL COMMUNICATIONS COMMISSION

47 CFR Part 54

[CC Docket No. 02–6; FCC 09–105]

Schools and Libraries Universal Service Support Mechanism

AGENCY: Federal Communications Commission.

ACTION: Final rule.

SUMMARY: In this document, the Federal Communications Commission (Commission) addresses matters related to the eligibility of products and services under the schools and libraries universal service support mechanism, also known as the E-rate program. First, in the Report and Order, the Commission modifies its rules to expressly include interconnected voice over Internet protocol (VoIP) and text messaging as eligible services under the E-rate program. Second, in the process of releasing the list of services that will be eligible for discounts for E-rate funding year 2010, the Commission clarifies the E-rate program eligibility of video on-demand servers, ethernet, web hosting, wireless local area network (LAN) controllers, and virtualization software. It also finds that telephone broadcast messaging, unbundled warranties, power distribution units, softphones, interactive white boards, and e-mail archiving are ineligible for E-rate program funding.

DATES: Effective May 7, 2010.

FOR FURTHER INFORMATION CONTACT: Cara Voth, Wireline Competition Bureau, Telecommunications Access Policy Division, (202) 418–7400 or TTY: (202) 418–0484.

SUPPLEMENTARY INFORMATION: This is a synopsis of the Commission's Report and Order in CC Docket No. 02–6, FCC 09–105, adopted December 1, 2009, and released December 2, 2009. The complete text of this document is available for inspection and copying during normal business hours in the FCC Reference Information Center, Portals II, 445 12th Street, SW., Room CY–A257, Washington, DC 20554. The document may also be purchased from the Commission's duplicating contractor, Best Copy and Printing, Inc., 445 12th Street, SW., Room CY–B402, Washington, DC 20554, telephone (800) 378–3160 or (202) 863–2893, facsimile (202) 863–2898, or via the Internet at *http://www.bcpiweb.com*. It is also available on the Commission's Web site at *http://www.fcc.gov.*

People with Disabilities: To request materials in accessible formats for people with disabilities (braille, large print, electronic files, audio format), send an e-mail to *fcc504@fcc.gov* or call the Consumer & Governmental Affairs Bureau at 202–418–0530 (voice), 202–418–0432 (tty).

Synopsis of the Report and Order

I. Introduction

1. In the Report and Order, we conclude that interconnected VoIP service is eligible for E-rate support and should continue to be an eligible service under the E-rate program. We also conclude that text messaging is eligible for E-rate support. In response to the 2010 ESL Public Notice, we clarify the E-rate program eligibility of video on-demand servers, ethernet, web hosting, wireless local area network (LAN) controllers, and virtualization software. We find that telephone broadcast messaging, unbundled warranties, power distribution units, softphones, interactive white boards, and e-mail archiving are ineligible for E-rate program funding. Finally, we release the Eligible Services List (ESL) for E-rate funding year 2010.

II. Background

2. Under the E-rate program, eligible schools, libraries, and consortia that include eligible schools and libraries may receive discounts for eligible telecommunications services, Internet access, and internal connections. Section 254 of the Communications Act of 1934, as amended (the Act), gives the Commission the authority to designate "telecommunications services" and certain additional services eligible for support under the E-rate program. The Commission may also designate services eligible for E-rate support as part of its authority to enhance, to the extent technically feasible and economically reasonable, access to advanced telecommunications and information services for all public and non-profit elementary and secondary school classrooms and libraries.

3. Since the initial implementation of the E-rate program in 1998, and consistent with the Commission's rules and requirements, USAC has developed procedures and guidelines to ensure that E-rate funding is provided only for eligible services. Initially, the Commission directed USAC, in consultation with the Commission, to determine whether particular services fell within the eligibility criteria established under the Act and the Commission's rules and policies. USAC began to update and post to its Web site on an annual basis a list of services and products eligible to receive discounts under the E-rate program, now known as the ESL. In consultation with the Wireline Competition Bureau (Bureau), USAC updated the list to reflect any

changes in rules that had occurred during the previous year and to address issues that arose in the application review process.

4. On December 23, 2003, the Commission adopted section 54.522 of its rules, formalizing the process for updating the ESL for the E-rate program. Specifically, under section 54.522 of the Commission's rules, the Commission must seek comment on USAC's proposed ESL and issue a public notice attaching the final ESL for the upcoming funding year at least 60 days prior to the opening of the application funding window for the E-rate program. In its current form, the ESL is divided into five main categories—telecommunications service, Internet access, internal connections, basic maintenance of internal connections, and miscellaneous.

5. In the 2010 ESL Public Notice, the Bureau sought comment on changes to the ESL proposed by USAC for funding year 2010. Comments on the 2010 ESL Public Notice were due on June 23, 2009, and reply comments were due on June 30, 2009. In the ESL NPRM, released in July 2008, the Commission sought comment on issues related to eligible services that had been raised by commenters but had not yet been resolved through the ESL public notice and revision process. For example, the Commission sought comment on the inclusion of interconnected VoIP service in the ESL, and whether text messaging, telephone broadcast messaging, and other individual services should be eligible for E-rate support under section 254(c)(3) of the Act. The Commission also sought comment on which rules, if any, would need to be amended to implement any changes made as a result of the ESL NPRM. Comments on the ESL NPRM were due on September 18, 2008, and reply comments were due on October 3, 2008.

III. Discussion

A. Designation of Additional Supported Services

6. In this Report and Order, we modify our rules to expressly include interconnected VoIP and text messaging as eligible services under the E-rate program.

7. *Interconnected VoIP* We conclude that we should modify our rules to expressly include interconnected VoIP as a service eligible for E-rate support, and we will continue to fund interconnected VoIP service under the E-rate support mechanism. We also determine that interconnected VoIP service should be a Priority 1 service because regardless of its ultimate regulatory classification, it is defined as "enabl[ing] real-time, two-way voice communications," 47 CFR 9.3, and thus provides basic connectivity akin to other Priority 1 services. We note, however, that not all of the components of an interconnected VoIP service are eligible for Priority 1 funding. Any components of an interconnected VoIP system that would be considered internal connections would be eligible for Priority 2 funding only, and any components of an interconnected VoIP system that are end-user equipment are ineligible for funding. We also adopt USAC's proposal that interconnected VoIP be listed in both the telecommunications and Internet access categories of the ESL, despite the fact that the Commission has not yet determined the regulatory classification of interconnected VoIP.

8. We find that, pursuant to section 254 of the Act, the Commission has the authority to include interconnected VoIP service as an additional service eligible for E-rate support. We therefore amend section 54.503 of our rules to designate interconnected VoIP as a supported special service. We note that the Commission has not yet classified interconnected VoIP service as either a telecommunications service or an information service. If interconnected VoIP service is found to be a telecommunications service, sections 254(c)(1), (c)(3), and (h)(1)(B) of the Act provide the Commission with the authority to provide E-rate support for all commercially available telecommunications services. 47 U.S.C. 254(c)(1), (c)(3). If, however, interconnected VoIP is determined to be an information service, sections 254(c)(3), (h)(1)(B), and (h)(2) of the Act, as explained in the Universal Service First Report and Order, provide the Commission with the authority to provide E-rate support for interconnected VoIP when provided by both telecommunications carriers and non-telecommunications carriers because such support will "enhance * * * access to advanced telecommunications and information services" for schools and libraries. 47 U.S.C. 254(c)(3), (h)(1)(B), (h)(2)(A). No matter how interconnected VoIP is ultimately classified, we find that the Commission has statutory authority to include it as an eligible supported service. Therefore, we amend section 54.517 of our rules to permit interconnected VoIP to be provided by non-telecommunications carriers.

9. Furthermore, we agree with commenters that the permanent inclusion of interconnected VoIP service increases the options available to schools and libraries to encourage meaningful communications among parents, teachers, and school and library administrators. Indeed, because interconnected VoIP is increasingly used to replace analog voice service, funding interconnected VoIP service is consistent with the concept of competitive neutrality, which is the principle of treating similarly situated services in the same manner for E-rate funding purposes, as mandated by the Commission. We also agree with commenters that the inclusion of interconnected VoIP service as an eligible service allows schools and libraries to benefit from the same cost efficiencies and service features that have led many consumers and businesses to choose this technology.

10. We also sought comment on whether interconnected VoIP service should remain classified in the miscellaneous service category, as it has been in previous ESLs. As proposed by USAC in its annual ESL submission, we conclude that interconnected VoIP service should be listed in both the telecommunications and Internet access categories to help minimize applicant confusion noted by commenters. We clarify that we are not, by this action, ultimately determining that interconnected VoIP is either a telecommunications service or an Internet access service. Rather, we put interconnected VoIP in both of those ESL categories because interconnected VoIP can be provided by both telecommunications service providers or non-telecommunications service providers. Because of this change, it will no longer be necessary to list interconnected VoIP in the miscellaneous category of the ESL. We believe this change will also clarify that applicants can apply for and receive E-rate funding for interconnected VoIP service provided by either a telecommunications service provider or an Internet access service provider. We encourage applicants soliciting bids for interconnected VoIP services to post for the services in both categories to expand the number of service providers that can bid on the services sought. Consistent with USAC's recommendation, we clarify that applicants are not required to prepare a technology plan if they are seeking discounts only for interconnected VoIP. Thus, we amend section 54.504(b) of our rules to make clear that no technology plan is needed if applicants are applying only for interconnected VoIP.

11. We also agree with Funds for Learning that any interconnected VoIP hardware that does not meet the test for Priority 1 services in the Tennessee

Order should be considered Priority 2 internal connections and should be ineligible for Priority 1 funding. In the Tennessee Order, the Commission stated that a service is considered a component of internal connections if it is necessary to "transport information within one or more instructional buildings of a single school campus." The Commission also stated that it was reasonable to presume that if facilities are located on an applicant's premises, then such facilities are necessary to transport information within one or more buildings of the school campus, and are thus a Priority 2 internal connections service and not part of an end-to-end Internet access service, i.e., a Priority 1 service. This presumption can be rebutted with evidence that the applicant does not own or have exclusive use of the facilities. Thus, leased VoIP telephone systems will need to be evaluated in accordance with the conditions in the Tennessee Order, to determine whether they should be eligible as Priority 2 internal connections only or if some portion of the system would be eligible as Priority 1. For example, only the lease of a single basic terminating component is eligible as a Priority 1 service under E-rate and this may include a VoIP gateway device located on the applicant's premises, but hubs, routers and switches are not considered basic terminating components and would be subject to the on-premise Priority 1 equipment conditions set forth in the Tennessee Order.

12. In the ESL NPRM, we also sought comment on whether applicants requesting funding for interconnected VoIP service as an Internet access service must comply with and certify to requirements identified in the Children's Internet Protection Act (CIPA). 47 U.S.C. 254(h)(5), (l). Enacted in 2001, CIPA imposed requirements on schools and libraries "having computers with Internet access" and prohibits schools and libraries from receiving discounted services if those requirements are not met. 47 U.S.C. 254(h)(5), (h)(6). This prohibition is not applicable to a school or library that receives discounted services "only for purposes other than the provision of Internet access, Internet service, or internal connections." 47 U.S.C. 254(h)(5)(A)(ii), (h)(6)(A)(ii). Thus, the Commission determined that schools or libraries receiving only discounted telecommunications services were not required to comply with CIPA. Consistent with the majority of commenters' arguments, we conclude that applicants requesting funds for interconnected VoIP service alone are not required to comply with and certify to CIPA requirements. While interconnected VoIP service may traverse the Internet, interconnected VoIP service, by definition, is not used to provide an Internet access service, Internet service, or internal connections. 47 CFR 9.3. Therefore, we find that CIPA compliance is not required for applicants that receive funding for interconnected VoIP service. Applicants seeking support for interconnected VoIP service that also seek support for Internet access, Internet service, or internal connections would certify their CIPA compliance separately for the Internet access.

13. *Text Messaging.* We find that we should modify our rules to include text messaging, known as short message service (SMS), as a service eligible for E-rate support. We agree with commenters who noted that text messaging is similar to other E-rate-eligible services used by applicants to communicate, such as e-mail and paging services. Moreover, we believe our decision to add text messaging is analogous to our decision in the Schools and Libraries Second Report and Order to add voice mail service to the list of E-rate-eligible services. Thus, for similar reasons, we designate text messaging as a service eligible for E-rate support. We note that we include text messaging as an eligible service irrespective of whether text message is ultimately categorized as a telecommunications service or an information service. This service will be categorized in the ESL in the telecommunications service category as a component of telephone service because text messaging has generally been available in conjunction with wireless telephone service, and the charges for text messaging are typically bundled with wireless telephone service or the separate charges for the text messaging service appear on the same bill as the telephone service. We therefore amend section 54.503 of our rules to designate text messaging as a supported special service.

14. We remind applicants that text messaging is eligible for E-rate support when used for educational purposes only. The Commission had established a presumption that activities that occur in a library or classroom or on library or school property are integral, immediate, and proximate to the education of students or the provision of library services to library patrons. We caution applicants that for purposes of the E-rate program, eligible text messaging would not include applications, software or other special features that, for example, are used to facilitate the mass distribution of text messages, or the creation or management of distribution groups for text messaging.

B. Clarifications Regarding the Eligibility for Support of Services in the Funding Year 2010 ESL

15. We also release the ESL for E-rate funding year 2010 and make findings about the particular changes to the ESL recommended by USAC. Specifically, we clarify the eligibility of video on-demand servers, ethernet, Web hosting, wireless LAN controllers, VoIP-related services, and virtualization software. We also find that telephone broadcast messaging, unbundled warranties, power distribution units, softphones, interactive white boards, and e-mail archiving are ineligible for E-rate program funding.

16. *Video On-Demand Servers.* Although USAC had proposed to make "video on-demand servers" ineligible in their entirety, we clarify that applicants can continue to receive E-rate discounts as internal connections for the portion of a video on-demand server that enables the transport of video to the classroom or parts of a library. The portion of a video on-demand server that enables the storage of video or other content, however, would remain ineligible. To clarify the eligibility status of a video on-demand server, we add the term "video content storage" to the list of ineligible storage components on the ESL. This should more clearly delineate the portion of a video on-demand server that is ineligible for discounts. Currently, applicants are using servers that house video for various purposes, including transporting information over a wide area network (WAN) or LAN to classrooms from a central server. We note that there may be video on-demand servers that are primarily dedicated to the storage of video and other content and the cost-allocation used by the manufacturer should accurately reflect the true use of the server. We also caution applicants that duplicative products or services are ineligible. If applicants are using other products or services to transport video or information throughout their school or library buildings, the portion of a video on-demand server that also provides this capability will be considered duplicative and ineligible.

17. *Ethernet.* We clarify that ethernet is an eligible digital transmission technology in the telecommunications funding category of the ESL. Ethernet technology provides a network that connects computers. Although traditionally associated with local area

networks, technology has evolved such that ethernet networks can span large distances and can provide connections from within an eligible school or library to other locations beyond the school or library. Therefore, we find that for purposes of the E-rate program, ethernet service is eligible in the telecommunications funding category. We agree with commenters who state that adding ethernet to the ESL "reflects the evolution of telecommunications technologies that are commercially available and is a clarification of previous eligibility." We also note that although it was not specifically listed in the ESL for funding year 2009, ethernet is a type of digital transmission service that has been eligible for E-rate discounts when purchased as a Priority 1 telecommunications service.

18. *Web hosting.* We clarify that web pages protected by a username and password are eligible for funding as part of web hosting services. The fact that a school or library restricts access to all or part of its Web site to certain users—*e.g.,* school administrators, teachers, librarians and students—does not render the service ineligible for E-rate funds. Web hosting has been on the ESL since funding year 2004, as Internet access. We emphasize that an eligible Web hosting service is limited to hosting a school or library's Web site—software applications, end-user file storage, and content editing features are still ineligible components of a web hosting service. Such ineligible web hosting features would include, but would not be limited to, the posting of content created by third party vendors, any type of interactive application feature that would allow for blogging, and any features involving data input or retrieval including searching of databases for grades, student attendance files, or other reports. We caution applicants that they must cost-allocate these types of ineligible features. The clarification to allow funding for web pages protected by a username and password was intended to allow school administrators, parents, students, and library employees to view web pages that, may, for various reasons, need to be restricted from viewing by the rest of the public. This clarification was not intended to allow applicants to obtain funding for additional web hosting-related applications and features beyond the service that enables a school or library to have hosted web pages, including any application software or features that may be required to maintain password protected Web pages.

19. *Wireless LAN Controllers.* We agree with USAC that wireless LAN controllers should be specifically listed in the ESL as eligible internal connections under the data distribution category. A wireless LAN controller is a device that is a central component of a wireless network solution and that helps to manage the large-scale deployment of a wireless network. In its proposed changes to the ESL for E-rate funding year 2010, USAC proposes to include a definition of a wireless LAN controller as a component that is used in conjunction with access points to create a wireless local area network. USAC defines an "access point" as a base station in a wireless LAN and states that access points are typically stand-alone devices that may plug into an ethernet hub or server or may provide a repeater function for wireless networks. When a school or library is relying on a wireless network solution, wireless LAN controllers, in conjunction with access points, are necessary for the delivery of information all the way to the classrooms of the school or rooms of the library. Under the E-rate program, internal connections components are those that are necessary to "transport information within one or more instructional buildings of a single school campus or within one or more non-administrative buildings that comprise a single library branch." Wireless LAN controllers, therefore, are eligible for support under the E-rate program as internal connections. Applicants have been receiving support for wireless LAN controllers as eligible internal connections and this change to the ESL is merely a clarification of the service's existing funding status.

20. *Interconnected VoIP-Related Software.* We agree with USAC that we should clarify that funding for user licenses for VoIP systems are eligible server based software and can be requested in the internal connections funding category. Interconnected VoIP user licenses are necessary for the utilization of the VoIP system. They are similar to client access licenses for eligible software products, except that they are specific to VoIP systems. Client access licenses are currently eligible for E-rate funding. Commenters agree with the proposed clarification, noting that applicants have received funding for these services in prior funding years.

21. *Virtualization Software.* We agree with USAC that virtualization software is eligible for E-rate support as internal connections. As stated above, under the E-rate program, internal connections components are those that are necessary to "transport information within one or more instructional buildings of a single school campus or within one or more non-administrative buildings that comprise a single library branch." USAC's draft ESL for funding year 2010 states that virtualization software allows for the creation of multiple virtual servers on a single server, essentially allowing the work of multiple servers to be performed on one server. We agree with Funds for Learning that virtualization software should be eligible for E-rate funding when it is used for eligible server functions. Moreover, one of the internal connections for which the E-rate program provides discounts is operating system software, which enables the basic operations of a computer system or other electronic device. We find that virtualization software is a type of operating system software. Applicants can use virtualization software to transport information within its school or library, and, in so doing, would be using a single server to perform the tasks of what would usually take multiple servers. Thus, virtualization software may be a cost-effective technology for applicants and is eligible for E-rate funding. If applicants also use virtualization software for functions that are ineligible for E-rate support, such as archiving, functions that support ineligible applications, or network management, the applicants must perform a cost allocation to remove the ineligible functions from their E-rate funding requests.

22. *Telephone Broadcast Messaging.* We agree with USAC that telephone broadcast messaging should not be added to the ESL because we find that it does not fit within any of the current categories of supported services. A broadcast messaging service is one that can call hundreds or thousands of recipients and play a pre-recorded message from school administrators about information including, but not limited to, weather delays or closings, school absences, or child safety issues. Broadcast messaging has been described by commenters as an add-on to voice mail service and an application riding on top of a service provider's telecommunications infrastructure. Only a few categories of software are eligible for E-rate funding, however, including operating system software, e-mail software, and software for a server-based, shared voice mail system. While voice mail has been designated as an eligible service, and the E-rate program pays for the software for a server-based shared voice mail system, the record in the ESL NPRM proceeding established that telephone broadcast messaging is an "add-on to voice mail" service and not software for voice mail itself. Therefore, we find that broadcast

messaging consists of applications or features that do not fit into any of the current categories of supported services and thus, should not be added to the list of software applications that are currently eligible for support as internal connections. Moreover, we find that it would not be in the public interest to add telephone broadcast messaging to the ESL when requests for E-rate funding consistently exceed the funding cap. While we believe that many school districts find telephone broadcast messaging a useful service, we do not believe it is essential to the educational purposes of schools and libraries, and funding this service may have an adverse effect on funds available for other already eligible services.

23. *Unbundled Warranties.* We find that unbundled warranties are not services eligible for E-rate discounts as basic maintenance of internal connections. In its proposed changes to the ESL, USAC proposes to add unbundled warranty to the basic maintenance category of the ESL and defines "unbundled warranty" as a separately priced warranty allowing for broken equipment to be fixed or, in the event that the problem is beyond repair, replaced. The Commission has found that basic maintenance services are eligible for universal service support as Priority 2 internal connections service if, but for the maintenance at issue, the internal connection would not function and serve its intended purpose with the degree of reliability ordinarily provided in the marketplace to entities receiving such services. We do not add unbundled warranties to the ESL at this time because we find that a warranty may be duplicative of an applicant's maintenance agreement or contract, which is eligible for E-rate discounts. To avoid the potential waste of E-rate resources, we decline to allow applicants to receive E-rate discounts for duplicative unbundled warranties. Moreover, the current ESL states that basic maintenance is eligible for discount only if it is a component of a maintenance agreement or contract for eligible components. An unbundled warranty would not be a component of a maintenance agreement or contract for eligible components. Therefore, we find that an unbundled warranty is not eligible for E-rate funds as basic maintenance.

24. *Power Distribution Units.* We agree with USAC that the ESL should be updated to clearly state that power distribution units are not eligible for E-rate support as internal connections. USAC proposes to define a "power distribution unit" as a power strip designed for data centers or racks with greater capacity and features than a power strip, and a "power strip" as a group of sockets that allow for multiple power cords to plug into a single device. Power strips have not previously been eligible for E-rate funding and, because a power distribution unit is merely a type of power strip with additional capacities and features, we find that it is also ineligible for E-rate program funds.

25. *Softphones.* We agree with USAC's proposal to clarify in the ESL that softphones are software that is ineligible for E-rate funding. The Commission has approved operating system software, e-mail software, and software for a server-based, shared voice mail system as eligible software under the internal connections funding category for E-rate. USAC proposes to define a softphone as end-user application software that allows users the use of a personal computer's microphone and speakers to make telephone calls in place of a physical end-user telephone. This type of application software is unlike the types of software the Commission has previously approved for E-rate funding and, as commenters note, softphones perform the same functions as physical desktop telephones, which are end-user equipment and are not eligible for E-rate funding.

26. *Interactive White Boards.* We agree with USAC and commenters that the ESL should clarify that interactive white boards are end-user equipment that is ineligible for E-rate funding. End-user equipment, such as desktop telephones, personal computers, fax machines, and modems, for example, is not eligible for E-rate discounts. In its draft ESL for funding year 2010, USAC defines an "interactive white board" as a device that allows end-users to display information with a vast array of interactive features. We find, therefore, that interactive white boards are end-user equipment that is not eligible for E-rate funding.

27. *E-mail Archiving.* We agree with USAC's proposal to clarify in the ESL that e-mail archiving is an ineligible component of an e-mail service. In addition, we agree with USAC's clarification to the draft ESL for funding year 2010 that, for purposes of E-rate support, storage products may be used for eligible e-mail files but not for e-mail archiving. USAC's draft ESL for funding year 2010 defines e-mail archiving as a form of electronic recordkeeping, often compressing e-mail files to make available greater in-box space. For example, when e-mail is archived to reduce in-box size, reduce hard drive space, and retain records for future retrieval, it constitutes the storage of end-user files and is ineligible for E-rate discounts. Although E-rate eligible e-mail services can include a short-term storage component that enables the user to view current e-mails, any long-term storage service is ineligible for E-rate discounts and we agree with USAC that this distinction should be made clear to applicants in the 2010 ESL.

Procedural Matters

Final Regulatory Flexibility Act Certification

28. The Regulatory Flexibility Act (RFA), *see* 5 U.S.C. 603, requires that an agency prepare a regulatory flexibility analysis for notice-and-comment rulemaking proceedings, unless the agency certifies that "the rule will not, if promulgated, have a significant economic impact on a substantial number of small entities." *See* 5 U.S.C. 605(b). The RFA generally defines "small entity" as having the same meaning as the terms "small business," "small organization," and "small governmental jurisdiction." 5 U.S.C. 601(6). In addition, the term "small business" has the same meaning as the term "small business concern" under the Small Business Act. 5 U.S.C. 601(3). A "small business concern" is one which: (1) Is independently owned and operated; (2) is not dominant in its field of operation; and (3) satisfies any additional criteria established by the Small Business Administration (SBA). 15 U.S.C. 632.

29. In the report and order, we modify our rules to expressly include interconnected voice over Internet protocol (VoIP) and text messaging as eligible services in our rules governing the E-rate program. We also release the list of services that will be eligible for discounts for E-rate funding year 2010. This Eligible Services List (ESL) is released on an annual basis to enable school and library applicants and other affected entities to determine the services and products that are eligible for E-rate discounts. In the report and order we add services to the ESL but do not remove any services from the list. Thus, the only changes made in our report and order result in the ability of schools and libraries to seek E-rate discounts for more services than were available to them in the prior funding year. This means that the rule revisions will result in a positive net impact on small entities. Therefore, we certify that the requirements of the report and order will have no significant economic impact.

30. The Commission will send a copy of the report and order, including a copy

of this Final Regulatory Flexibility Certification, in a report to Congress pursuant to the Congressional Review Act. *See* 5 U.S.C. 801(a)(1)(A). In addition, the report and order (or summary thereof) and this final certification will be published in the **Federal Register,** and will be sent to the Chief Counsel for Advocacy of the U.S. Small Business Administration. *See* 5 U.S.C. 605(b).

Paperwork Reduction

31. This report and order does not contain proposed information collection(s) subject to the Paperwork Reduction Act of 1995 (PRA), Public Law 104–13. In addition, therefore, it does not contain any new or modified "information collection burden for small business concerns with fewer than 25 employees," pursuant to the Small Business Paperwork Relief Act of 2002, Public Law 107–198, see 44 U.S.C. 3506(c)(4).

Congressional Review Act

32. The Commission will send a copy of this Report and Order [CC Docket No. 02–6; FCC 09–105] in a report to Congress and the Government Accountability Office pursuant to the Congressional Review Act, *see* U.S.C. 801(a)(1)(A).

Ex Parte Presentations

33. These matters shall be treated as a "permit-but-disclose" proceeding in accordance with the Commission's ex parte rules. 47 CFR 1.1200 through 1.1216. Persons making oral ex parte presentations are reminded that memoranda summarizing the presentations must contain summaries of the substance of the presentations and not merely a listing of the subjects discussed. More than a one or two sentence description of the views and arguments presented is generally required. 47 CFR 1.1206(b)(2). Other requirements pertaining to oral and written presentations are set forth in section 1.1206(b) of the Commission's rules. 47 CFR 1.1206(b).

Ordering Clauses

34. *It is ordered,* that pursuant to the authority contained in sections 1 through 4, 201–205, 254, 303(r), and 403 of the Communications Act of 1934, as amended, 47 U.S.C. 151–154, 201 through 205, 254, 303(r), and 403, this report and order *is adopted.*

35. *It is further ordered,* that pursuant to the authority contained in sections 1 through 4, 201–205, 254, 303(r), and 403 of the Communications Act of 1934, as amended, 47 U.S.C. 151–154, 201 through 205, 254, 303(r), and 403, sections 54.503, 54.507, and 54.517 of the Commission's rules, 47 CFR 54.503, 54.507 and 54.517, *is amended,* effective May 7, 2010.

36. *It is further ordered* that the Commission's Consumer and Governmental Affairs Bureau, Reference Information Center, shall send a copy of this report and order, including the Final Regulatory Flexibility Certification, to the Chief Counsel for Advocacy of the Small Business Administration.

List of Subjects in 47 CFR Part 54

Communications common carriers, Health facilities, Infants and children, Libraries, Reporting and recordkeeping requirements, Schools, Telecommunications, Telephone.

Federal Communications Commission.

Marlene H. Dortch,

Secretary.

Final Rules

■ For the reasons discussed in the preamble, the Federal Communications Commission amends 47 CFR part 54 as follows:

PART 54—UNIVERSAL SERVICE

■ 1. The authority citation for part 54 continues to read as follows:

Authority: 47 U.S.C. 151, 154(i), 201, 205, 214, and 254 unless otherwise noted.

■ 2. Section 54.503 is revised to read as follows:

§ 54.503 Other supported special services.

For the purposes of this subpart, other supported special services provided by telecommunications carriers include voice mail, interconnected voice over Internet protocol (VoIP), text messaging, Internet access, and installation and maintenance of internal connections in addition to all reasonable charges that are incurred by taking such services, such as state and federal taxes. Charges for termination liability, penalty surcharges, and other charges not included in the cost of taking such services shall not be covered by the universal service support mechanisms.

■ 3. Section 54.504 is amended by revising paragraph (b)(2)(iv) to read as follows:

§ 54.504 Requests for services.

* * * * *

(b) * * *

(2) * * *

(iv) The technology plan(s) has/have been approved by a state or other authorized body; the technology plan(s) will be approved by a state or other authorized body; or no technology plan needed because the applicant is applying for voice mail, interconnected voice over Internet protocol (VoIP), or basic local, cellular, PCS, or long distance telephone service only.

* * * * *

■ 4. Section 54.507 is amended by revising paragraphs (g) introductory text, (g)(1)introductory text, (g)(1)(i) through (iii) (the note remains unchanged) to read as follows:

§ 54.507 Cap.

* * * * *

(g) *Rules of priority.* The Administrator shall act in accordance with paragraph (g)(1) of this section with respect to applicants that file an FCC Form 471, as described in § 54.504(c) of this part, when a filing period described in paragraph (c) of this section is in effect. The Administrator shall act in accordance with paragraph (g)(2) of this section with respect to applicants that file an FCC Form 471, as described in § 54.504(c) of this part, at all times other than within a filing period described in paragraph (c) of this section.

(1) When the filing period described in paragraph (c) of this section closes, the Administrator shall calculate the total demand for support submitted by applicants during the filing period. If total demand exceeds the total support available for that funding year, the Administrator shall take the following steps:

(i) The Administrator shall first calculate the demand for services listed under the telecommunications and Internet access categories on the eligible services list for all discount levels, as determined by the schools and libraries discount matrix in § 54.505(c). These services shall receive first priority for the available funding.

(ii) The Administrator shall then calculate the amount of available funding remaining after providing support for the telecommunications and Internet access categories for all discount levels. The Administrator shall allocate the remaining funds to the requests for support for internal connections, beginning with the most economically disadvantaged schools and libraries, as determined by the schools and libraries discount matrix in § 54.505(c) of this part. Schools and libraries eligible for a 90 percent discount shall receive first priority for the remaining funds, and those funds will be applied to their requests for internal connections.

(iii) To the extent that funds remain after the allocation described in §§ 54.507(g)(1)(i) and (ii), the

Administrator shall next allocate funds toward the requests for internal connections submitted by schools and libraries eligible for an 80 percent discount, then for a 70 percent discount, and shall continue committing funds for internal connections in the same manner to the applicants at each descending discount level until there are no funds remaining.

* * * * *

■ 5. Section 54.517 is amended by revising paragraph (b) to read as follows:

§ 54.517 Services provided by non-telecommunications carriers.

* * * * *

(b) *Supported services.* Non-telecommunications carriers shall be eligible for universal service support under this subpart for providing interconnected voice over Internet protocol (VoIP), voice mail, Internet access, and installation and maintenance of internal connections.

* * * * *

[FR Doc. 2010–7757 Filed 4–6–10; 8:45 am]

BILLING CODE 6712–01–P

DEPARTMENT OF TRANSPORTATION

National Highway Traffic Safety Administration

49 CFR Part 571

[Docket No. NHTSA–2009–0093]

RIN 2127–AG51

Federal Motor Vehicle Safety Standards; Roof Crush Resistance

AGENCY: National Highway Traffic Safety Administration (NHTSA), Department of Transportation.

ACTION: Final rule; further response to comments.

SUMMARY: In May 2009, NHTSA published a final rule that upgraded the agency's safety standard on roof crush resistance. This document provides a further response to comments submitted by the National Truck Equipment Association (NTEA) during that rulemaking.

FOR FURTHER INFORMATION CONTACT: For non-legal issues, you may call Christopher J. Wiacek, NHTSA Office of Crashworthiness Standards, telephone 202–366–4801. For legal issues, you may call J. Edward Glancy, NHTSA Office of Chief Counsel, telephone 202–366–2992. You may send mail to these officials at the National Highway Traffic Safety Administration, 1200 New Jersey Avenue, SE., West Building, Washington, DC 20590.

SUPPLEMENTARY INFORMATION:

Table of Contents

I. Background
  A. Final Rule Upgrading FMVSS No. 216
  B. Challenge by NTEA
  C. Consent Motion To Stay Briefing Schedule
II. Today's Document and Related Actions
III. Multi-Stage Vehicles and the Multi-Stage Certification Scheme
  A. Multi-Stage Vehicles
  B. Safety Standards and Certification
  C. 2005 and 2006 Final Rules on Certification of Vehicles Built in Two or More Stages
IV. Multi-Stage Issues in the Rulemaking To Upgrade FMVSS No. 216
  A. FMVSS No. 216 Prior to the Upgrade
  B. The Proposed Rule
  C. Public Comments
  D. May 2009 Final Rule
V. Further Response to Comments Regarding Multi-Stage Vehicles
  A. Introduction
  B. The Current Certification Scheme Is Not an Unlawful Delegation of Agency Authority
  C. Current IVDs Concerning FMVSS No. 216 are Workable
  D. Final-Stage Manufacturers Can Certify Their Vehicles Built on Chassis-Cabs as Being Compliant With FMVSS No. 216a
  E. In General, IVDs Are Workable
  F. NHTSA Provided a Testing Alternative, FMVSS No. 220
  G. There Is Little Cost for Multi-Stage Manufacturers To Comply With FMVSS No. 216a
  H. Conclusion

I. Background

A. Final Rule Upgrading FMVSS No. 216

On May 12, 2009, as part of a comprehensive plan for reducing the serious risk of rollover crashes and the risk of death and serious injury in those crashes, NHTSA published in the **Federal Register** (74 FR 22348) a final rule substantially upgrading Federal Motor Vehicle Safety Standard (FMVSS) No. 216, *Roof Crush Resistance.* The upgraded standard is designated FMVSS No. 216a.

First, for the vehicles previously subject to the standard, i.e., passenger cars and multipurpose passenger vehicles, trucks and buses with a Gross Vehicle Weight Rating (GVWR) of 2,722 kilograms (6,000 pounds) or less, the rule doubled the amount of force the vehicle's roof structure must withstand in the specified test, from 1.5 times the vehicle's unloaded weight to 3.0 times the vehicle's unloaded weight. We note that this value is sometimes referred to as the strength-to-weight ratio (SWR), e.g., a SWR of 1.5, 2.0, 2.5, and so forth.

Second, the rule extended the applicability of the standard so that it will also apply to vehicles with a GVWR greater than 2,722 kilograms (6,000 pounds), but not greater than 4,536 kilograms (10,000 pounds). The rule established a force requirement of 1.5 times the vehicle's unloaded weight for these newly included vehicles.

Third, the rule required all of the above vehicles to meet the specified force requirements in a two-sided test, instead of a single-sided test. For the two-sided test, the same vehicle must meet the force requirements when tested first on one side and then on the other side of the vehicle.

Fourth, the rule established a new requirement for maintenance of headroom, i.e., survival space, during testing in addition to the existing limit on the amount of roof crush. The rule also included a number of special provisions, including ones related to leadtime, to address the needs of multi-stage manufacturers, alterers, and small volume manufacturers.

B. Challenge by NTEA

NTEA filed a petition for review of the May 2009 final rule in the United States Court of Appeals for the Sixth Circuit. That organization had submitted comments during the rulemaking opposing the agency's proposed revisions with respect to multi-stage vehicles.

C. Consent Motion To Stay Briefing Schedule

NHTSA filed with the Court a motion for a stay of the briefing schedule. The agency stated that it believed the Court's consideration of the challenge by NTEA would be facilitated by a fuller response to the comments that organization had submitted during the rulemaking, which would permit both NTEA and the Court to more fully address the agency's rationale. NHTSA also noted that petitions for reconsideration of the rule were pending before the agency. NTEA consented to the motion and the Court granted a six-month stay of the briefing schedule on October 2, 2009.

II. Today's Document and Related Actions

In this document, we provide a fuller response to comments submitted by NTEA on our proposal to upgrade FMVSS No. 216.

We are also publishing two separate documents related to the May 2009 final rule. One is a response to petitions for reconsideration of that rule. The other is a correcting rule. The correcting rule incorporates a provision that was discussed in the preamble but inadvertently omitted from the regulatory text. As explained in the preamble, the agency decided to

exclude a narrow category of multi-stage vehicles from FMVSS No. 216 altogether, multi-stage trucks with a GVWR greater than 2,722 kilograms (6,000 pounds) not built on either a chassis-cab or an incomplete vehicle with a full exterior van body. The regulatory text inadvertently omitted the reference to incomplete vehicles with a full exterior van body.

III. Multi-Stage Vehicles and the Multi-Stage Certification Scheme

A. Multi-Stage Vehicles

Multi-stage vehicles are motor vehicles that are produced in two or more stages. These vehicles are not produced by a single manufacturer on an assembly line as is the typical passenger car or sport utility vehicle. Instead, one manufacturer produces an "incomplete vehicle" which requires further manufacturing operations to become a completed vehicle. As defined in 49 CFR 567.3, an incomplete vehicle is an assemblage consisting, at a minimum, of chassis (including the frame) structure, power train, steering system, suspension system, and braking system, in the state that those systems are to be part of the completed vehicle, but requires further manufacturing operations to become a completed vehicle.[1]

Most incomplete vehicles are manufactured by large manufacturers, such as General Motors, Ford and Chrysler. Most final-stage manufacturers are small businesses.[2] Multi-stage vehicles are aimed at a variety of niche markets, most of which are too small to be serviced economically by single stage manufacturers.

In terms of degree of completeness, the spectrum of incomplete vehicles ranges from a stripped chassis, i.e., an incomplete vehicle without an occupant compartment, to a chassis-cab. As defined in 49 CFR 567.3, a chassis-cab is an incomplete vehicle, with a completed occupant compartment, that requires only the addition of cargo-carrying, work-performing, or load-bearing components to perform its intended functions. A type of incomplete vehicle that falls between stripped chassis and chassis-cabs on this spectrum is a chassis cutaway, which is an incomplete vehicle delivered with a partial occupant compartment that does not have a rear wall.

In a typical situation, the incomplete vehicle is delivered to the final-stage manufacturer which adds work-performing or cargo-carrying components to complete the vehicle. For example, the incomplete vehicle may be a chassis-cab, i.e., have a cab, but nothing built on the frame behind the cab. As completed, it may be a dry freight van (box truck), dump truck, tow truck, or plumber's truck. In some cases, there may also be intermediate stage manufacturers involved in the production of a multi-stage motor vehicle.

B. Safety Standards and Certification

NHTSA issues Federal motor vehicle safety standards applicable to the manufacture and sale of new motor vehicles and certain items of motor vehicle equipment under the authority of the National Traffic and Motor Vehicle Safety Act, as amended, codified as Chapter 301 of Title 49 of the United States Code, "Motor Vehicle Safety" (Vehicle Safety Act).[3] The agency does not provide approvals of motor vehicles or equipment. Instead, the Vehicle Safety Act establishes a "self-certification" process under which each manufacturer is responsible for certifying that its products meet all applicable safety standards.[4]

Each of NHTSA's safety standards specifies the test conditions and procedures that the agency will use to evaluate the performance of the vehicle or equipment being tested for compliance with the particular safety standard. NHTSA follows these specified test procedures and conditions when conducting its compliance testing. However, manufacturers are not required to test their products in the manner specified in the relevant safety standard, or even to test the product at all, as their basis for certifying that the product complies with all relevant standards.

A manufacturer may evaluate its products in various ways to determine whether the vehicle or equipment will comply with the safety standards when tested by the agency according to the procedures specified in the standard and to provide a basis for its certification of compliance. Depending on the circumstances, the manufacturer may be able to base its certification on actual testing (according to the procedure specified in the standard or some other procedure), computer simulation, engineering analysis, engineering judgment or other means.[5]

All motor vehicles, whether single stage or multi-stage, must be certified to meet applicable FMVSSs.[6] NHTSA has developed specific certification regulations for multi-stage vehicles. The certification process is governed by 49 CFR part 567 *Certification.* 49 CFR 567.5 sets forth the certification requirements for manufacturers of vehicles manufactured in two or more stages. Certification responsibilities for the applicable FMVSSs are communicated between manufacturers with the use of an incomplete vehicle document (IVD). With limited exceptions,[7] each manufacturer of an incomplete vehicle and each intermediate manufacturer[8] assumes legal responsibility for all certification-related duties under the Vehicle Safety Act with respect to:

> (i) Components and systems it installs or supplies for installation on the incomplete vehicle, unless changed by a subsequent manufacturer;
>
> (ii) The vehicle as further manufactured or completed by an intermediate or final-stage manufacturer, to the extent that the vehicle is completed in accordance with the IVD; and
>
> (iii) The accuracy of the information contained in the IVD.[9]

Final-stage manufacturers have complementary duties. Pursuant to 49 CFR 567.5(d), final-stage manufacturers assume

> legal responsibility for all certification-related duties and liabilities under the Vehicle Safety Act, except to the extent that the incomplete vehicle manufacturer or an intermediate manufacturer has provided equipment subject to a safety standard or expressly assumed responsibility for standards related to systems and components it supplied and except to the extent that the final-stage manufacturer completed the vehicle in accordance with the prior manufacturers' IVD or any addendum furnished pursuant to 49 CFR part 568, as to the Federal motor vehicle safety standards fully addressed therein.[10]

Final-stage manufacturers also have the duty to affix a certification label to each vehicle in a manner that does not obscure labels affixed by previous stage manufacturers and that, among other things, contains certification statements.[11] The final-stage manufacturer may make one of the following alternative certification statements: (1) The vehicle conforms to all applicable FMVSS; (2) the vehicle was completed in accordance with the prior manufacturers' IVD where applicable and conforms to all applicable FMVSS; or (3) the vehicle

[1] The definition of "incomplete vehicle" also includes incomplete trailers.

[2] As defined by The Regulatory Flexibility Act of 1980, as amended, 5 U.S.C. 601(3).

[3] 49 U.S.C. 30101 *et seq.*

[4] 49 U.S.C. 30112(a) and 30115.

[5] *See* 71 FR 28183–28184.

[6] 49 U.S.C. 30112(a) and 30115.

[7] *See* 70 FR at 7432–33, 49 CFR 567.5(b) and (c).

[8] In the remainder of the preamble, NHTSA will not discuss intermediate manufacturers separately.

[9] 49 CFR 567.5(b)(1).

[10] 49 CFR 567.5(d)(1).

[11] 49 CFR 567.5(d)(2).

was completed in accordance with the prior manufacturers' IVD where applicable except for certain listed exceptions by FMVSS and the vehicle conforms to all applicable FMVSS.[12]

As reflected above, the incomplete vehicle manufacturer furnishes an IVD for incomplete vehicles pursuant to 49 CFR 568.4. For each applicable FMVSS, the incomplete vehicle manufacturer makes one of three affirmative statements in the IVD: (1) a Type 1 statement that the vehicle when completed will conform to the standard if no alterations are made in identified components (this representation is most often made with respect to chassis-cabs since, as indicated earlier, they have a completed occupant compartment); (2) a Type 2 statement that sets forth the specific conditions of final manufacture under which the incomplete vehicle manufacturer specifies that the completed vehicle will conform to the standard (e.g., the vehicle, when completed, will meet the brake standard if it does not exceed gross axle weight ratings, the center of gravity at a specific vehicle weight rating is not above a certain height and no alterations are made to any brake system component on the incomplete vehicle); or (3) a Type 3 statement that conformity to the standard cannot be determined based on the incomplete vehicle as supplied, and the incomplete vehicle manufacturer makes no representation as to conformity with the standard (e.g., when components and systems must be added by the final-stage manufacturer and compliance cannot be decided at the time the incomplete vehicle leaves the incomplete vehicle manufacturer).

When the IVD makes a Type 1 or Type 2 statement, there is "pass-through" certification unless obviated by a subsequent manufacturer. The final-stage manufacturer can rely on the IVD to certify the vehicle to a particular standard.

Multi-stage vehicle manufacturers sometimes "alter" a vehicle to the end-users' specifications. An altered vehicle is one that is completed and certified in accordance with the agency's regulations and then altered before the first retail sale of the vehicle, in such a manner as may affect the vehicle's compliance with one or more FMVSS or the validity of the vehicle's stated weight ratings or vehicle type classification. This definition does not include the addition, substitution, or removal of readily attachable components, such as mirrors or tire and rim assemblies, or by minor finishing operations such as painting. The person which performs such operations on a completed vehicle is referred to as a vehicle "alterer." An alterer must certify that the vehicle remains in compliance with all applicable FMVSS affected by the alteration.

C. 2005 and 2006 Final Rules on Certification of Vehicles Built in Two or More Stages

On February 14, 2005, NHTSA published in the **Federal Register** (70 FR 7414) a final rule amending four different parts of Title 49 to address various certification issues related to vehicles built in two or more stages and, to a lesser degree, to altered vehicles. Among other things, the rule allowed the use of pass-through certification so that it can be used not only for multi-stage vehicles based on chassis-cabs, but also for those based on other types of incomplete vehicles.

In the preamble to the February 2005 final rule, and in other documents in that rulemaking, NHTSA discussed the history of issues related to the certification of vehicles built in two or more stages, which have long been sources of contention within the affected industry and before the agency and the courts.

Since 1977, NHTSA's regulations for certification of multi-stage vehicles have contained provisions for certification statements by chassis-cab manufacturers.[13] In 1990, the United States Court of Appeals for the Sixth Circuit ruled in *National Truck and Equipment Ass'n* v. *NHTSA,* 919 F.2d 1148 (6th Cir. 1990), that the requirements of a particular FMVSS were impracticable for final-stage manufacturers using vehicles other than chassis-cabs for which the incomplete vehicle manufacturer was not required to provide "pass-through" certification. That decision led to rulemaking that ultimately resulted in the February 2005 multi-stage certification final rule.

NTEA petitioned for reconsideration of the February 2005 multi-stage certification final rule. NHTSA responded to that organization's petition in a final rule; response to petition for reconsideration published in the **Federal Register** (71 FR 28168) on May 15, 2006. While the agency made some changes in the February 2005 final rule in response to the petition, it denied the remainder of the petition for reconsideration that addressed issues regarding certification of multi-stage vehicles and responsibility for recalls of multi-stage vehicles.

In its petition for reconsideration of the February 2005 certification final rule, NTEA challenged the regulatory scheme of certifying multi-stage vehicles.[14] It claimed, among other things, that the provided IVDs are unworkable, insufficient, and that it is not possible for a final-stage manufacturer to comply with the agency's multi-stage certification regulations. Furthermore, NTEA argued that even if compliance were possible, it would be economically ruinous to NTEA's members.

In denying most aspects of NTEA's petition for reconsideration, NHTSA provided specific and detailed responses to these and other relevant arguments. We explained that certification is important for safety and that the certification scheme is "workable."

We stated that in recognition of the fact that incomplete vehicle manufacturers do not control work performed by final-stage manufacturers and can fairly anticipate only some things, but not everything done by final-stage manufacturers, the regulatory system of "pass-through" certification is reasonable. The IVD provides the basis for the final-stage manufacturer's certification with enumerated FMVSS, on various conditions, including, for example, that the final-stage manufacturer does not exceed the GVWR of the chassis or introduce modifications to the incomplete vehicle that interfere with compliance. As we explained, the IVD is a general document that accompanies the incomplete vehicle. IVDs are typically not limited to one application (one body or type of equipment), but contain limits and conditions in light of the nature and capacity of the chassis and potential problems resulting from completion of an incomplete vehicle. Final-stage manufacturers are informed, by the IVD, of components and systems that should not be altered, and, by following those instructions and other information from the incomplete vehicle manufacturer, they are able to certify.

Overall, NTEA sought to remove the certification responsibility from final-stage manufacturers and impose much of that responsibility on incomplete vehicle manufacturers. NTEA's petition ignored the fact that incomplete vehicle

[12] 49 CFR 567.5(d)(2)(v)(A).

[13] 49 CFR 567.5 (1977 and 1978). *See* 42 FR 37814 (July 25, 1977).

[14] We note that NTEA submitted its comments on NHTSA's notice of proposed rulemaking (NPRM) to upgrade the roof crush resistance standard in November 2005. Those comments, which addressed a number of multi-stage issues, were thus submitted after the agency had published its February 2005 final rule on certification of multi-stage vehicles but before NHTSA responded to NTEA's petition for reconsideration of the certification rule.

manufacturers do not control what final-stage manufacturers do with the incomplete vehicles.

As we noted, a system of pass-through certification has existed for more than 25 years, and in that time many multi-stage vehicles have been built and certified by final-stage manufacturers. This fact alone indicates that the system is workable and operates as intended. Moreover, as we pointed out, the availability of multi-stage vehicles belies NTEA's position,[15] and, contrary to that petitioner's position, market forces create business reasons for incomplete vehicle manufacturers to provide workable IVDs. We noted that NTEA's argument ignores the fact that the system is not broken—many types of multi-stage vehicles are being manufactured and offered for sale, including those manufactured by NTEA members. These include ambulances, service trucks, small school buses, mid-size buses, tow trucks and vans.[16] The fact that vehicles such as these are being made indicates that the IVDs are workable. We also noted that NTEA ignored the cooperative relationships between incomplete and final-stage manufacturers.[17]

In our May 2006 response to petitions, we explained that certification serves an important safety function in the multi-stage vehicle business. Many multi-stage vehicles carry people and important cargo—from schoolchildren on school buses to liquid fuel on propane and gasoline trucks. The safety need for certification of compliance with FMVSS in these types of vehicles is uncontroverted.[18]

As part of responding to NTEA's claim in its petition to the 2005 Rule that the existing IVD's are not workable, we carefully examined the certification statements included in an IVD that NTEA appended to its petition.[19] The IVD was for the General Motors (GM) CK chassis-cab. We analyzed certification statements for FMVSS Nos. 105, Hydraulic and Electric Brake Systems; 135, *Light Vehicle Brake Systems;* 204, *Steering Control Rearward Displacement;* 201, *Occupant Protection in Interior Impact;* 212, *Windshield Mounting;* 219, *Windshield Zone Intrusion;* 214, *Side Impact Protection;* 208, *Occupant Crash Protection;* 216, *Roof Crush Resistance;* and 301, *Fuel System Integrity.* In each instance, we showed why the IVD was workable and why various limitations were reasonable.

We also explained that many resources are available to final-stage manufacturers.[20] As a group, final-stage manufacturers do not operate in an informational vacuum. In addition to the IVDs, these resources include upfitter[21] guides from incomplete vehicle manufacturers, incomplete vehicle manufacturer help lines, the final-stage manufacturers' own experience and judgment, and commercially available software.

We also explained that issues regarding impracticability should be decided in the context of rulemaking for each FMVSS.[22]

IV. Multi-Stage Issues in the Rulemaking To Upgrade FMVSS No. 216

A. FMVSS No. 216 Prior to the Upgrade

FMVSS No. 216 seeks to reduce deaths and serious injuries resulting from the roof of a vehicle being crushed and pushed into the occupant compartment when the roof strikes the ground during rollover crashes. Prior to the upgrade, the standard required that when a large steel test plate (sometimes referred to as a platen) is placed in contact with either side of the forward edge of the roof of a vehicle and then pressed downward, simulating contact of the roof with the ground during a rollover crash, with steadily increasing force until a force equivalent to 1.5 times the unloaded weight of the vehicle is reached, the distance that the test plate has moved from the point of contact must not exceed 127 mm (5 inches). The criterion of the test plate not being permitted to move more than a specified amount is sometimes referred to as the "platen travel" criterion. The application of force was limited to 22,240 Newtons (5,000 pounds) for passenger cars, even if the unloaded weight of the car times 1.5 is greater than that amount.

Since 1991, this standard applied to passenger cars, multipurpose passenger vehicles (MPVs), trucks, and buses with a GVWR of 2,722 kilograms (6,000 pounds) or less.[23] Compliance with the final rule was required on September 1, 1994. Therefore, FMVSS No. 216 has applied to some multi-stage vehicles, e.g., certain small trucks and small recreation vehicles, since 1994.[24]

B. The Proposed Rule

1. NPRM and SNPRM in General

On August 23, 2005, NHTSA published in the **Federal Register** (70 FR 49223) a NPRM to upgrade FMVSS No. 216, *Roof Crush Resistance.*[25] The NPRM reflected comments received in response to a Request for Comments ("RFC") published in the **Federal Register** (66 FR 53376) on October 22, 2001, and research and testing conducted prior to the publication of the RFC.

To better address fatalities and injuries occurring in roof-involved rollover crashes, we proposed to extend the application of the standard to vehicles with a GVWR of up to 4,536 kilograms (10,000 pounds), and to strengthen the requirements of FMVSS No. 216 by mandating that the vehicle roof structures withstand a force equivalent to 2.5 times the unloaded vehicle weight ("SWR"), and to eliminate the 22,240 Newton (5,000 pound) force limit for passenger cars. We note that shortly before the NPRM was published, Congress enacted the Safe, Accountable, Flexible, Efficient Transportation Equity Act: A Legacy for Users (SAFETEA–LU), which included a specific requirement for us to upgrade FMVSS No. 216 relating to roof strength for driver and passenger sides for motor vehicles with a GVWR of not more than 4,536 kilograms (10,000 pounds).

Further, in recognition of the fact that the pre-test distance between the interior surface of the roof and a given occupant's head varies from vehicle model to vehicle model, we proposed to regulate roof strength by requiring that the crush not exceed the available headroom. Under the proposal, this requirement would replace the current limit on platen travel.

We also proposed to:

- Allow vehicles manufactured in two or more stages, other than chassis-cabs, to be certified to the roof crush requirements of FMVSS No. 220, *School Bus Rollover Protection,* instead of FMVSS No. 216.
- Clarify the definition and scope of exclusion for convertibles.

[15] 71 FR at 28176 (section titled "The Availability of Multi-stage Vehicles Belies NTEA's Position") and at 28184–85 (section titled "NHTSA's Market Forces Argument Is Justified and Consistent With the Multi-stage Vehicle Market").

[16] See, e.g., *http://www.ntea.com/mr/divisions.asp.*

[17] We cited the example of General Motors' relationships with final-stage manufacturers it refers to as Special Vehicle Manufacturers. 71 FR at 28185.

[18] 71 FR at 28176; See also 71 FR at 28175.

[19] 71 FR at 28177–28183 (section titled "The Existing IVDs Are Workable).

[20] 71 FR 28183–28184 (section titled "Additional Resources Available to Final-Stage Manufacturers").

[21] Final-stage manufacturers are sometimes referred to as upfitters in the trade.

[22] 71 FR 28186.

[23] 56 FR 15510.

[24] GM has sold an incomplete vehicle chassis-cab, the GMT–355, that has a GVWR of 2,722 kilograms (6,000 pounds) or less and is therefore subject to FMVSS No. 216. This chassis-cab is based on the Chevrolet Colorado/GMC Canyon. Final-stage manufacturers can certify completed vehicles by using the IVD for the GMT 355.

[25] Docket No. NHTSA–2005–22143.

• Revise the vehicle tie-down procedure to minimize variability in testing.

On January 30, 2008, NHTSA published in the **Federal Register** (73 FR 5484) a supplemental notice of proposed rulemaking (SNPRM) for our ongoing roof crush resistance rulemaking.[26] In that document, we asked for public comment on a number of issues that might affect the content of the final rule, including possible variations in the proposed requirements. We also announced the release of the results of various vehicle tests conducted since the proposal.

2. Multi-Stage Issues

In our August 2005 NPRM to upgrade FMVSS No. 216, we included a section titled "Vehicles Manufactured in Two or More Stages."[27] For vehicles manufactured in two or more stages, other than vehicles incorporating chassis-cabs, we proposed to give manufacturers the option of certifying to either the existing roof crush requirements of FMVSS No. 220, *School Bus Rollover Protection,* or the new roof crush requirements of FMVSS No. 216. FMVSS No. 220 uses a horizontal plate, instead of the angled plate of Standard No. 216.

In developing our proposal, we considered whether the proposed standard would be appropriate for the type of motor vehicle for which it would be prescribed. We stated that we believed it was appropriate to consider incomplete vehicles, other than those incorporating chassis-cabs, as a vehicle type subject to different regulatory requirements. We anticipated that final-stage manufacturers using chassis-cabs to produce multi-stage vehicles would be in position to take advantage of "pass-through certification" of chassis-cabs, and therefore did not believe the option of alternative compliance with FMVSS No. 220 was appropriate.

We noted that while we believed that the requirements in FMVSS No. 220 have been effective for school buses, we were concerned that they may not be as effective for other vehicle types. The FMVSS No. 216 test procedure results in roof deformations that are consistent with the observed crush patterns in the real world for light vehicles. Because of this, we explained that our preference would be to use the FMVSS No. 216 test procedure for light vehicles. We believed, however, that this approach would fail to consider the practicability problems and special issues for multi-stage manufacturers.

We stated that in these circumstances, we believed that the requirements of FMVSS No. 220 appeared to offer a reasonable avenue to balance the desire to respond to the needs of multi-stage manufacturers and the need to increase safety in rollover crashes. We noted that several states already require "para-transit" vans and other buses, which are typically manufactured in multiple stages, to comply with the roof crush requirements of FMVSS No. 220.[28] We tentatively concluded that these state requirements show the burden on multi-stage manufacturers for evaluating roof strength in accordance with FMVSS No. 220 is not unreasonable, and applying FMVSS No. 220 to these vehicles would ensure that there are some requirements for roof crush protection where none currently exist.

C. Public Comments

We received comments concerning requirements for multi-stage and altered vehicles from Advocates for Highway Safety ("Advocates"), NTEA, National Mobility Equipment Dealers Association (NMEDA) and Recreational Vehicle Industry Association (RVIA).

1. Overview of Comments on Multi-Stage Issues

Advocates stated that it opposed permitting FMVSS No. 220 as an alternative for multi-stage vehicles. It claimed that FMVSS No. 220 is a "weak" standard whose effects on roof strength in actual rollover crashes are mostly unknown.

NTEA recommended that all multi-stage vehicles be excluded from roof crush resistance requirements. It stated that manufacturers of non-chassis-cab vehicles will not be able to conduct the tests or perform engineering analysis to ensure conformance to FMVSS No. 220. NTEA also disagreed with the assumption that the presence of State requirements for FMVSS No. 220 compliance demonstrates that final-stage manufacturers can actually comply.

NTEA also stated it is impractical for the agency to assume manufacturers of multi-stage vehicles built on chassis-cabs will be able to rely on IVDs to provide pass-through certification for compliance as it relates to roof strength. It argued that the final-stage manufacturer would therefore be responsible for conducting costly analyses and testing to verify compliance with FMVSS No. 216.

NMEDA expressed concern that the FMVSS No. 220 option would only be available for multi-stage vehicles. It asked that the FMVSS No. 220 option be extended to raised or altered roof vehicles. To encompass the modifiers in the proposed upgrade to FMVSS No. 216, NMEDA asked that a vehicle roof that is altered after first retail sale be considered in compliance if it meets the requirements of FMVSS No. 216 or FMVSS No. 220. NMEDA also stated that raising a roof increases the available headroom and that the roof therefore can crush more before there is any contact with an occupant's head. NMEDA requested the agency account for the additional headroom beyond the original vehicle's headroom in establishing any requirement.

RVIA supported our proposal to permit FMVSS No. 220 as an option for small motor homes as this would allow manufacturers to address the unique issues concerning such specialized vehicles built in two or more stages.

2. Detailed Summary of NTEA Comments

NTEA stated that NHTSA incorrectly assumes that final-stage manufacturers of vehicles built on chassis-cabs will be able to use pass-through certification as a means to comply with the rule. According to NTEA, NHTSA acknowledged certification problems faced by final-stage manufacturers with respect to safety standards that are based on the performance of a vehicle in a dynamic test. NTEA stated that in the preamble to the proposed rule to upgrade FMVSS No. 216, NHTSA made several references to the compliance difficulties and compliance issues faced by final-stage manufacturers, but without any explanation of the root cause of those problems. NTEA said the proposed standard is a dynamic test standard. NTEA stated that in the rulemaking revising certification regulations for multi-stage vehicles, NHTSA concluded that the cost of dynamic vehicle testing is a legitimate concern when relatively small numbers of similarly configured vehicles are produced by a small manufacturer. NTEA stated that the agency also noted that alternative means of compliance such as computer modeling are not appreciably more affordable for small volume manufacturing.

According to NTEA, under these circumstances, no company could incur the costs of performing the tests described in the proposed rule (or in any other dynamic test standard). NTEA stated that the multi-stage manufacturers, for the most part, do not produce any standard models. The

[26] Docket No. NHTSA–2008–0015.

[27] 70 FR 49234–49235.

[28] These states include Pennsylvania, Minnesota, Wisconsin, Tennessee, Michigan, Utah, Alabama, and California.

overwhelming majority of multi-stage vehicles are produced to end-user specifications on a custom-order basis reflecting specifications provided by the customer.

NTEA argument that an FMVSS is not practicable if the only means of compliance offered in the Standard is the use of pass-through certification.

NTEA argued that an FMVSS is not practicable if the only means of compliance offered in the Standard is the use of pass-through certification. It noted that the Vehicle Safety Act at 49 U.S.C. 30111(a) states that each FMVSS must "be practicable, meet the need for motor vehicle safety, and be stated in objective terms." NTEA cited the 1990 *NTEA* case, and stated that the Sixth Circuit ruled that "for a standard to be practicable, it must offer in the body of the standard, a means for all subject to the standard to prove compliance." [29]

NTEA stated that NHTSA anticipates that final-stage manufacturers will be able to pass-through, and thereby rely on, the conformity statements provided by the chassis-cab manufacturers in IVDs. NTEA stated there is no requirement in NHTSA's regulations that compels an incomplete vehicle manufacturer to provide the type of conformity statement as to any safety standard that would facilitate pass-through opportunities for the final-stage manufacturer. That organization said that the chassis-cab manufacturer has absolute discretion whether to provide a Type 1, Type 2, or Type 3 statement.

NTEA said that NHTSA apparently believes market forces will cause chassis-cab manufacturers to provide reasonable compliance envelopes when making conformity statements. NTEA cited the agency's multi-stage vehicle certification rulemaking, and the petition for reconsideration it submitted on the May 2005 final rule which, at that time, had not yet been responded to by NHTSA. NTEA claimed that it demonstrated through the submission of IVDs with its petition that NHTSA's market forces theory is not supported by the IVDs that are provided by major incomplete vehicle manufacturers. NTEA stated that those IVDs show that incomplete vehicle manufacturers routinely provide Type 1 and Type 2 conformity statements that are so restrictive that they provide no opportunity whatsoever for pass-through certification.

NTEA stated that if a chassis-cab manufacturer provides a Type 3 conformity statement, there is nothing to pass-through to the final-stage manufacturer. It stated that if the chassis-cab manufacturer provides a Type 1 conformity statement—i.e., one that states the vehicle will conform to the standard if no alterations are made to identified components in the vehicle—or if the manufacturer provides a Type 2 conformity statement—i.e., one that sets out specific conditions of final manufacture under which the vehicle would conform to the test—then the final-stage manufacturer's ability to rely on (or "pass-through") the conformity statement depends entirely on whether the vehicle can be completed by the final-stage manufacturer within the parameters and limitations contained in the conformity statement. NTEA stated that if the parameters and limitations are reasonable, then there is some chance of pass-through, but if the parameters and limitations are unreasonable (or if the stated conditions of conformity are simply conservative as an engineering matter), pass-through will not be possible.

NTEA also argued that incomplete vehicle manufacturers have strong incentive to provide very narrow compliance envelopes, given responsibilities set forth in the agency's certification regulation. NTEA cited 49 CFR 567.5 and stated that the certification regulations allocate to the incomplete vehicle manufacturer legal responsibility for all components incorporated by a final-stage manufacturer (other than defective components and systems) to the extent the vehicle is completed in accordance with the instructions contained in the IVD, while the regulations allocate to the final-stage manufacturer legal responsibility for any work done by the final-stage manufacturer to complete the vehicle that was not performed in accordance with instruction contained in the IVD.

NTEA argued that in the context of pass-through certification, a conformity statement in an IVD is a zero-sum game. It said that if the final-stage manufacturer can complete the vehicle within the parameters and conditions of the incomplete vehicle manufacturer's Type 1 or Type 2 conformity statement, the incomplete vehicle manufacturer bears legal responsibility for compliance with the FMVSS in question; if the final-stage manufacturer cannot complete the vehicle within the parameters of the incomplete vehicle manufacturer's Type 1 or Type 2 conformity statement, or if the incomplete vehicle manufacturer provides a Type 3 conformity statement, the final-stage manufacturer bears legal responsibility for compliance with the subject FMVSS. NTEA stated that the incomplete vehicle manufacturer's control over the type and text of its conformity statements essentially gives it unfettered discretion to allocate to itself or to the final-stage manufacturer the legal responsibilities and liability for compliance with the safety standard, and its decision is not subject to review or challenge because the regulations do not require the incomplete vehicle manufacturer to be reasonable or to act in good faith in crafting its conformity statements. NTEA argued that this aspect of the certification scheme—the ability of an interested private party to determine the legal liability of another party with respect to a safety standard—amounts to an impermissible delegation of NHTSA's statutory authority to a private party. It cited several cases.[30]

NTEA argued that a safety standard cannot meet the statutory requirement that it be practicable if the sole, plausible means of compliance available to affected manufacturers is the use of pass-through certification. It said that this is the case because that means of compliance depends entirely on the actions of private parties (i.e., incomplete vehicle manufacturers) that are free to provide Type 3 statements as to any standard, and that are free to establish any parameters and conditions they wish, reasonable or unreasonable, in any Type 1 or Type 2 conformity statement. NTEA argued that the proposed rule thus fails to meet the requirement of the 1990 *NTEA* case that a standard offer in the body of the standard a means for all subject to the standard to prove compliance. NTEA cited its petition for reconsideration of the multi-stage vehicle certification rule, and claimed that it had demonstrated that incomplete vehicle manufacturers routinely provide Type 1 and Type 2 conformity statements with respect to dynamic test standards that are so restrictive as to effectively provide no pass-through opportunity whatsoever. NTEA argued that in the real world, i.e., the reality defined by the IVDs that chassis manufacturers provide with their products, pass-through certification is not a viable option for final-stage manufacturers.

NTEA argument that the conformity statements in existing IVDs make clear that final-stage manufacturers are not likely to have pass-through opportunities for the proposed rule.

NTEA claimed that the inadequacy of pass-through certification as the sole, plausible means of demonstrating compliance to the proposed rule is plainly reflected in the IVDs that exist for chassis-cabs rated up to 2,722

[29] NTEA comment to the NPRM at p. 5, quoting *NTEA* decision, 919 F.2d at 1153.

[30] See NTEA comment at p. 8.

kilograms (6,000 pounds) GVWR and for those rated 2,723 and 4,536 kilograms (6,001—10,000 pounds) GVWR. That organization provided IVDs with conformity statements as examples of the restrictiveness of IVDs.

NTEA stated that there is currently only one chassis-cab sold today that is rated 2,722 kilograms (6,000 pounds) or less and is therefore subject to the existing FMVSS No. 216: the General Motors GMT–355 chassis-cab. According to NTEA, all other currently available chassis-cabs are rated above 2,722 kilograms (6,000 pounds) GVWR and thus fall outside the purview of the existing standard.

NTEA cited language from the IVD for the 2006 model year GMT–355, and attached a copy of the IVD to its comments. That organization claimed that the Type I conformity statement to FMVSS No. 216 included in that IVD would provide no pass-through opportunity whatsoever to a final-stage manufacturer. NTEA argued that it would be invalidated by any alteration that affected the function, physical, chemical, or mechanical properties of any component, assembly or system in the chassis-cab. NTEA stated that final-stage manufacturers at a minimum will install a truck body onto the GMT–355 chassis-cab. NTEA claimed that the simplest installation of a truck body likely weighing several hundred pounds, plus the means used by the final-stage manufacturer to mount that body (e.g., by drilling holes in to the frame of the chassis-cab and bolting the body to the frame) will affect the physical properties, for example, of the chassis frame and numerous other structural components of the chassis-cab.

NTEA stated that GM includes an identical conformity statement for FMVSS No. 216 in its C/K fullsize pickup truck IVD. That organization stated that this also shows that GM is inclined to give a highly restrictive Type I statement. NTEA also stated that the IVDs provided by Ford for incomplete vehicles in the 2,723 and 4,536 kilograms (6,001 to 10,000 pound) GVWR range provide highly restrictive conformity statements, and cited conformity statements for FMVSS Nos. 212, 219 and 301.

NTEA argument that it is impracticable for multi-stage vehicles built on non-chassis-cabs to be certified to the proposed rule or to FMVSS No. 220.

NTEA argued that manufacturers of multi-stage vehicles built on non-chassis-cabs will be unable to confirm compliance of those vehicles either to the proposed rule or to FMVSS No. 220. It stated that those manufacturers will be unable to conduct the tests described in the proposed rule or to perform some alternative engineering analysis . NTEA argued that NHTSA's attempt to provide manufacturers with a reasonable certification option is well-intended, but misses the mark for several reasons.

NTEA stated that, as NHTSA seems to recognize, pass-through certification is unlikely to be available to manufacturers of multi-stage vehicles built on non-chassis-cabs, either for FMVSS No. 216 or for FMVSS No. 220, because those vehicles do not have completed cab compartments (which likely will cause the incomplete vehicle manufacturers to provide Type 3 conformity statements or highly restrictive Type 1 or 2 conformity statements). NTEA stated that NHTSA proposed to permit manufacturers of multi-stage vehicles built on non-chassis-cabs the option of certifying to FMVSS No. 220 instead of FMSS No. 216.

First, according to NTEA, the only vehicles rated 10,000 pounds or less that are subject to FMVSS No. 220 are Type A school buses. NTEA stated that these vehicles are built primarily on the Ford E series cutaway chassis and the GM G-Van cutaway chassis. That organization stated that Ford and GM provide Type 3 conformity statements for these vehicle and that, accordingly, manufacturers of multi-stage vehicles completed on these non-chassis-cabs will have no opportunity to pass-through the certification of the incomplete vehicle manufacturer. NTEA attached copies of the IVDs for these vehicles to its comment.

NTEA stated that as to all of the other models of non-chassis-cabs rated 10,000 pounds or less, there simply is no conformity statement provided with respect to FMVSS No. 220. That organization stated that this reflects the fact that none of these incomplete vehicles are used in the manufacturing of school buses.

NTEA stated that NHTSA indicated in the preamble of the proposed rule that certain States require para-transit vans and other buses to comply with FMVSS No. 220 and that these State requirements show that the burden on multi-stage manufacturers for evaluating roof strength in accordance with FMVSS No. 220 is not unreasonable. NTEA stated that the existence of State requirements concerning compliance with a dynamic test standard is not good evidence that final-stage manufacturers in fact are able to confirm compliance of vehicles with that standard.

NTEA also stated that to the extent school bus manufacturers or para-transit bus manufacturers are able to comply with FMVSS No. 220, that would merely reflect the particular circumstances regarding the manufacture of those vehicles, i.e., the production of relatively standardized models in relatively large production runs. NTEA stated that the fact that manufacturers in certain niche markets may be able to comply with FMVSS No. 220 does not change the fact that the typical final-stage manufacturer, which produces scores of vehicle configurations in small production runs, cannot demonstrate compliance with that dynamic testing standard through testing or engineering analysis.

NTEA compliance cost estimates.

NTEA stated that, in connection with its proposal, NHTSA presented extensive cost data which explain how much it would cost to structurally upgrade a vehicle in order to meet the new testing requirements, and then factored in increased vehicle weight and the effect on fuel costs. That organization stated that these costs are applied to populations of vehicle models each in the hundreds of thousands of vehicles.

NTEA stated that NHTSA's cost estimates do not factor in the costs of compliance testing for multi-stage produced vehicles. That organization stated that its members are faced with at least 1,085 identifiable vehicle configurations in the affected weight category that would require separate compliance testing. It stated that these vehicle configurations could be built by almost any of the 1,000 or more final-stage manufacturers in the U.S. NTEA stated that as each of these companies are competitors, there is no reason to believe that if one company actually tested one configuration that they would or could share that testing with another company. It also stated that no trade association or consortium could ever conduct over 1,000 compliance tests for the affected vehicle designs and then continue to test each year any of these configurations that are redesigned.

NTEA cited cost estimates for conducting the FMVSS No. 216 test and a test based on FMVSS 220. It also stated that the test is a destructive test, and that while the vehicle could be repaired and sold as used, this would be unwise for liability reasons and the vehicle should be destroyed after the test. NTEA stated that there are few, if any, final-stage manufacturers that have the equipment or personnel to conduct such tests, and that they would need to outsource the testing. NTEA stated that to its knowledge there are only three companies in the country that regularly perform such tests for third parties, and

final-stage manufacturers would have to incur substantial costs to transport their vehicles long distances to have them tested. It also said that following the testing, the vehicles could not be sold as new and would need to be repaired even to be sold as used, resulting in additional costs to be absorbed by the final-stage manufacturer. NTEA stated that, given these costs, it would be impracticable for manufacturers to demonstrate compliance by performing tests.

NTEA stated that NHTSA appeared to recognize that the cost of testing would be prohibitive for both vehicles built on chassis-cabs and those built on non-chassis-cabs, and that it would also be impracticable to demonstrate compliance by computer simulation or other engineering analysis. And, despite that recognition, NTEA stated that NHTSA proposed to apply the standard.

Based on discussions with one of the companies that conduct FMVSS compliance tests, NTEA understands that the average cost of conducting the existing test in FMVSS No. 216 is approximately $3,600 per vehicle configuration. It stated that NHTSA estimates that tests to comply with the proposed regulation will cost approximately $5,000. NTEA stated that a total test cost of $5,000 plus a vehicle value loss of $15,000 for 1,085 vehicle configurations results in testing costs of $21,700,000. It stated that this figure does not include design or structural costs for compliance or certain other costs.

NTEA concluded this portion of its comment by stating that the cost benefit analysis prepared by NHTSA ignores more than 20 million dollars in compliance tests primarily placed on small businesses.

NTEA conclusion.

NTEA stated that, as demonstrated, final-stage manufacturers will face compliance burdens that are not reasonable under NHTSA's proposed rule, and that compliance with the proposed requirements in FMVSS No. 216 will not be possible for final-stage manufacturers.

That organization stated that while it applauded NHTSA's decision to propose an alternative to compliance with FMVSS No. 216, the option to comply with FMVSS No. 220 would not provide any relief to manufacturers of multi-stage vehicles built on non-chassis-cabs. It stated that, due to costs, those manufacturers will not be able to perform the dynamic tests set forth in the proposed rule or in FMSVS No. 220, nor conduct engineering analyses to simulate the performance of vehicles in those tests. It also stated that because manufacturers of non-chassis-cabs do not have a completed occupant compartment, there will be no pass-through certification opportunities for multi-stage vehicles built on those chassis. NTEA argued that the option of certifying to FMVSS No. 220 is no option at all.

NTEA stated that as the demonstration of compliance with neither FMVSS No. 220 nor the proposed FMVSS No. 216 requirements will be possible for most final-stage manufacturers building on chassis-cabs or non-chassis-cabs, it urged that all vehicles manufactured in two or more stages be excluded from the rule.

D. May 2009 Final Rule

1. The Final Rule in General

As discussed earlier, on May 12, 2009, as part of a comprehensive plan for reducing the serious risk of rollover crashes and the risk of death and serious injury in those crashes, NHTSA published in the **Federal Register** (74 FR 22348) a final rule substantially upgrading FMVSS No. 216. The upgraded standard is designated FMVSS No. 216a.

First, for the vehicles currently subject to the standard, i.e., passenger cars and MPVs, trucks and buses with a GVWR of 2,722 kilograms (6,000 pounds) or less, the rule doubled the amount of force the vehicle's roof structure must withstand in the specified test, from 1.5 times the vehicle's unloaded weight to 3.0 times the vehicle's unloaded weight.

Second, the rule extended the applicability of the standard so that it will also apply to vehicles with a GVWR greater than 2,722 kilograms (6,000 pounds), but not greater than 4,536 kilograms (10,000 pounds). The rule established a force requirement of 1.5 times the vehicle's unloaded weight for these newly included vehicles.

Third, the rule required all of the above vehicles to meet the specified force requirements in a two-sided test, instead of a single-sided test, i.e., the same vehicle must meet the force requirements when tested first on one side and then on the other side of the vehicle.

Fourth, the rule established a new requirement for maintenance of headroom, i.e., survival space, during testing in addition to the existing limit on the amount of roof crush.

The rule also included a number of special provisions, including ones related to leadtime, to address the needs of multi-stage manufacturers, alterers, and small volume manufacturers.

2. The Final Rule and Multi-Stage Issues

In the May 2009 final rule upgrading FMVSS No. 216, we included a section in the preamble titled "Requirements for Multi-Stage and Altered Vehicles." [31] We included a summary of the comments concerning requirements for multi-stage and altered vehicles from NTEA, NMEDA, Advocates, and RVIA, and a response to those comments.

In addressing the issues raised by NTEA, we stated that, as a general matter, we believe that it is neither necessary nor would it be appropriate to exclude all multi-stage vehicles from roof crush resistance requirements. We explained that the purpose of FMVSS No. 216 is to improve occupant safety in the event of a rollover. If a multi-stage vehicle is involved in a rollover, the vehicle's roof strength will be an important factor in providing occupant protection. We stated that, therefore, while we seek to address the special needs and circumstances of multi-stage manufacturers, we declined to provide any blanket exclusion for all multi-stage vehicles. However, based on NTEA's comments, we did not extend FMVSS No. 216 to any trucks built on van cutaways or other types of incomplete vehicles without a completed roof structure, a difference from the NPRM.

The upgraded FMVSS No. 216 rule does not apply to any vehicles with a GVWR greater than 4,536 kilograms (10,000 pounds), including multi-stage vehicles. A good number of multi-stage vehicles, such as tow-trucks, some airport shuttles, and customized farm trucks, have a GVWR greater than 4,536 kilograms (10,000 pounds). Also, as with the previous version of FMVSS No. 216, the standard does not apply to school buses, which have been covered by FMVSS No. 220.

In the final rule, we then addressed the issues raised by NTEA and other commenters separately for the different types of multi-stage vehicles. The requirements that apply to multi-stage vehicles with a GVWR of 4,536 kilograms (10,000 pounds) or less are dependent on the GVWR and type of vehicle, including whether the vehicle was built using a chassis-cab.

Multi-stage vehicles built on chassis-cab incomplete vehicles.

If a vehicle is built on a chassis-cab, and it has a GVWR of 4,536 kilograms (10,000 pounds) or less, it is required to meet the same FMVSS No. 216 requirements as single stage vehicles. Therefore, these vehicles must meet the requirements of FMVSS No. 216a and

[31] 74 FR at 22372–74. This section was part of a larger section titled "Agency Decision and Response to Comments."

have a SWR of at least 3.0 if they have a GVWR of 2,722 kilograms (6,000 pounds) or less and a SWR of 1.5 if they have a GVWR above that level but not greater than 4,536 kilograms (10,000 pounds).

As background, we explained that a chassis-cab is an incomplete vehicle, with a completed occupant compartment, that requires only the addition of cargo-carrying, work-performing, or load-bearing components to perform its intended functions. As such, chassis-cabs have intact roof designs. Chassis-cabs are based on vehicles that are sold as complete vehicles by larger manufacturers, e.g., medium and full size pickup trucks, so their roof structure will be designed to meet the upgraded requirements of FMVSS No. 216. A good example of a chassis-cab vehicle is a moving truck. The driver of a chassis-cab vehicle would need to exit the vehicle to access the contents in the rear of the vehicle.

We stated that after considering the comments of NTEA, we believed that final-stage manufacturers can rely on the incomplete vehicle documents (IVD) for pass-through certification of compliance with FMVSS No. 216 for vehicles built using chassis-cabs. To do this, final-stage manufacturers will need to remain within specifications contained in the IVD. We stated that since the stringency of FMVSS No. 216 (SWR requirement) is dependent on a vehicle's unloaded vehicle weight, the final-stage manufacturer would need to remain within the specification for unloaded vehicle weight. If they did not, the roof would not likely have the strength to comply with FMVSS No. 216. We also explained that final-stage manufacturers will need to avoid changes to the vehicle that would affect roof strength adversely.[32]

Multi-stage trucks with a GVWR greater than 2,722 kilograms (6,000 pounds) not built using a chassis-cab and not built using an incomplete vehicle with a full exterior van body.

We explained that, based on the comments received, we had decided to exclude from FMVSS No. 216 multi-stage trucks with a GVWR greater than 2,722 kilograms (6,000 pounds) not built using a chassis cab and not built using an incomplete vehicle with a full exterior van body. This was a change from the NPRM. First, to be excluded, these multi-stage vehicles must be a truck. A truck is defined in 49 CFR 571.3 as being a "motor vehicle with motive power * * * designed primarily for the transportation of property or special purpose equipment." Second, to be excluded, these multi-stage trucks cannot be built using a chassis-cab or using an incomplete vehicle with a full exterior van body. Both chassis-cabs and incomplete vehicles built on a full exterior van body contain a completed roof structure, but would need additions before a final-stage manufacturer could certify its compliance as a completed vehicle. Incomplete vehicles with full exterior van bodies could include a van that did not have any seats. An incomplete vehicle such as this could, for example, be completed as a truck (cargo van) by adding front seats and interior shelves and partitions. Such a vehicle would not be excluded from the standard.

If a multi-stage truck within this weight range is not built on a chassis-cab or on a full exterior van body, then the vehicle is excluded from FMVSS No. 216 and the final-stage manufacturer would not need to certify compliance with the standard. Typically, these vehicles would be built on cutaways or on a stripped chassis. A cutaway chassis is a van cab design whose occupant compartment is not complete and ends immediately behind the driver and front passenger seat, i.e. there is no wall behind the front seats. A good example of this type of a multi-stage truck is a parcel delivery vehicle. These specialized vehicles are typically built on van cutaways because the driver or passenger may need access to the contents in the rear of the vehicle. A stripped chassis is an incomplete vehicle that is less complete than a cutaway, and could be nothing more than a rolling chassis consisting of only the engine, transmission, and ladder-type frame.

The agency excluded these vehicles in the final rule because there may be practicability problems. These incomplete vehicles will not have an intact roof. Because the strength of the roof may be dependent on the structure to be added by the final-stage manufacturer, the incomplete vehicle manufacturer may not provide IVD or similar information that would permit pass-through certification. Moreover, the design of the completed truck may be such that it is not possible to test the vehicle to FMVSS No. 216 (due to interference with the FMVSS test device) or inappropriate for testing with FMVSS No. 220.

Multi-Stage Buses and MPVS Not Built on Chassis-Cabs

For other multi-stage vehicles not built on chassis-cabs, we stated that we continued to believe, for the reasons discussed in the NPRM, that permitting FMVSS No. 220 as an option is a reasonable way to balance the desire to respond to the needs of multi-stage manufacturers and the need to increase safety in rollover crashes. These vehicles would be classified as a bus or MPV. Under 49 CFR 571.3, a bus is a motor vehicle "* * * designed for carrying more than ten persons," and a MPV is defined as a motor vehicle "* * * designed to carry ten passengers or less which is constructed on a truck chassis or with special features for occasional off-road operation." These buses and MPVs are built commonly using a van cutaway and would include, e.g., transit shuttle vehicles, ambulances, mobility vehicles and recreation vehicles. The FMVSS No. 220 test uses a single, horizontal platen and requires a SWR of 1.5.

In responding to Advocates' comment arguing against permitting FMVSS No. 220 as an alternative for multi-stage vehicles because it believes that FMVSS No. 220 is not sufficiently stringent, we noted that the organization did not provide analysis or data addressing the special circumstances faced by multi-stage manufacturers, or explain why it believed these manufacturers could certify compliance of their vehicles to FMVSS No. 216. We stated, therefore, that the commenter had not provided a basis for us to take a different position than we had taken in the NPRM. We stated that, as we had discussed in the NPRM, we believed the requirements in FMVSS No. 220 have been effective for school buses, but we are concerned that they may not be as effective for other vehicle types. We explained that our preference would be to use the FMVSS No. 216 test procedure for light vehicles, but that this approach would fail to consider the practicability problems and special issues for multi-stage manufacturers.

We noted that RVIA supported our proposal permitting testing to the FMVSS No. 220 standard, and that some of the vehicles in this category are already required to meet the requirements of FMVSS No. 220 as a result of State regulations.

[32] We also noted that some changes made by final-stage manufacturers could affect the ability to conduct an FMVSS No. 216 test, e.g., for a multi-stage truck, the addition of a cargo box structure higher than the occupant compartment could interfere with the placement of the FMVSS No. 216 test device. To address this concern, we included a specification in the final rule that such structures are removed prior to testing. (However, the structures are still counted as part of a vehicle's unloaded weight.)

Multi-Stage Vehicles and Complete Vehicles With a GVWR Greater Than 2,722 Kilograms (6,000 Pounds) Which Have Been Changed by Raising Their Original Roof

In the May 2009 final rule preamble, we stated that, in response to the comments of NMEDA, we agreed that the FMVSS No. 220 option should be available to multi-stage and complete vehicles with a GVWR greater than 2,722 kilograms (6,000 pounds) which have been changed by raising their original roof.

We stated that we believed that practicability issues arise for vehicles with a GVWR greater than 2,722 kilograms (6,000 pounds) whose roofs are raised. We also stated that we believe that the FMVSS No. 220 option is appropriate for the "para-transit" vans and buses. We stated that the FMVSS No. 220 option will help ensure that these occupants are afforded a level of protection that is currently not required. We stated that we were not providing this option to vehicles with raised roofs and a GVWR of less than or equal to 2,722 kilograms (6,000 pounds).

We stated that we believed that the practicability issues for vehicle alterers which raise roofs on the vehicles at issue are comparable to those of final-stage manufacturers. An alterer may raise a roof on a vehicle that was originally certified to FMVSS No. 216. We also stated that we believe that permitting alterers which raise roofs on these vehicles the option of certifying to FMVSS No. 220 balances potential practicability issues with the need to increase safety in rollovers.

Multi-Stage Vehicles With a GVWR of 2,722 Kilograms (6,000 Pounds) or Less

If a multi-stage vehicle has a GVWR of 2,722 kilograms (6,000 pounds) or less, it previously was subject to FMVSS No. 216. If these vehicles are built using a chassis-cab, they must comply with the upgraded roof crush resistance standard, including the 3.0 SWR requirement. For these vehicles that are not built on a chassis-cab, the final-stage manufacturer has the option of meeting either the upgraded roof crush resistance standard in FMVSS No. 216a, or can meet the standard in FMVSS No. 220 (1.5 SWR). As previously discussed, that test uses a single, horizontal platen.

V. Further Response to Comments Regarding Multi-Stage Vehicles

As a general matter, NTEA's comments on the agency's proposal to upgrade FMVSS No. 216 centered on two premises: (1) NHTSA's assumption that pass-through certification is available is invalid as evidenced by present IVDs; and (2) because NHTSA's pass-through certification scheme is invalid, NHTSA's analysis of the rule's impact and costs are flawed. The end result, according to NTEA, is that NHTSA's regulation on roof crush is impracticable for multi-stage vehicles, and, therefore, NHTSA's roof crush regulations should not include any requirements for multi-stage vehicles.

To get to NTEA's conclusion—FMVSS No. 216 should not apply to multi-stage vehicles—one has to believe that the certification scheme for multi-stage vehicles, which has been in place for several decades, is unworkable and invalid, at least as applied to FMVSS No. 216. NTEA has been making this argument in various contexts for over 25 years.[33]

Generally, NTEA makes the argument that pass-through certification is an impermissible delegation of NHTSA's statutory authority to a private party. Specific to FMVSS No. 216, NTEA believes NHTSA incorrectly assumes that pass-through certification will be available. NTEA argues that current IVDs prepared by incomplete vehicle manufacturers for FMVSS No. 216 and other standards are so restrictive that a final-stage manufacturer would violate the IVD by making a simple installation.

If that is so, NTEA argues, the final-stage manufacturers would be left to conduct their own testing to certify compliance with FMVSS No. 216. According to that organization, neither the two-sided platen test in FMVSS No. 216 nor the horizontal platen school bus test in FMVSS No. 220 is workable. Testing to either standard is, in NTEA's estimation, too burdensome and costly. According to NTEA, because NHTSA incorrectly assumes that pass-through certifications will be available, the agency's analysis of the costs of the rule is incorrect, and the rule is overly burdensome as to final-stage manufacturers.

For the reasons discussed below, NHTSA rejects NTEA's arguments and their conclusions.

A. Introduction

While NTEA has repeatedly claimed that the present certification scheme for multi-stage vehicles is invalid and unworkable, the availability of multi-stage vehicles belies that claim. There are many multi-stage vehicles on the road that have been certified to a number of standards, and the final-stage manufacturers are still in business. There are large numbers of multi-stage vehicles, such as school buses, box trucks, tanker trucks, work trucks, flatbed and stake trucks, tow trucks, dump trucks, and gasoline tank trucks on the road.

Moreover, final-stage manufacturers have certified multi-stage vehicles with a GVWR of 2,722 kilograms (6,000 pounds) or less to the current version of FMVSS No. 216. As noted earlier, FMVSS No. 216 was extended to trucks, buses, and MPVs with a GVWR of 2,722 kilograms (6,000 pounds) or less in a final rule published in 1991. This is a relatively low gross vehicle weight rating for commercial vehicles, which results in limited offerings. But, significantly, General Motors (GM) has sold an incomplete vehicle chassis-cab, the GMT–355, that has a GVWR of 2,722 kilograms (6,000 pounds) or less and is therefore subject to FMVSS No. 216. GM would not have offered the vehicle for years if there was not a market for them, as completed by final-stage manufacturers.

We note that under the May 2009 final rule, FMVSS No. 216 will not be applicable to vehicles with a GVWR greater than 4,536 kilograms (10,000 pounds). Incomplete vehicle manufacturers will not need to provide an IVD regarding FMVSS No. 216 for these heavier vehicles. In our estimation, the largest number of multi-stage vehicles are in this category.

In addition, final-stage manufacturers are currently certifying the compliance of their vehicles with a number of complex safety standards that include crash testing as part of the agency's compliance tests. These include, for example, FMVSS No. 214, *Side Impact Protection,* FMVSS No. 208, *Occupant Crash Protection* (frontal air bag technology), and FMVSS No. 301, *Fuel System Integrity.* These manufacturers ordinarily rely on the IVD in making these certifications.

NTEA's comments further contemplate no assistance from the incomplete vehicle manufacturer. However, NHTSA has seen the converse to be true—there are IVDs, upfitter guides, best practices manuals and help lines provided by incomplete vehicle manufacturers. Final-stage manufacturers also have their own technical expertise and engineering judgment, and commercially available computer aided engineering software.

Final-stage manufacturers can use their judgment, including engineering or technical judgment, to certify vehicles. Testing, as provided in the FMVSS, is not required as a matter of law to certify

[33] *See* 71 FR 28169–28171.

a vehicle.[34] Instead, sound judgment may be used. Many final-stage manufacturers bring considerable judgment to bear. They have been building and certifying vehicles for years. Final-stage manufacturers can and do use their base of experience in certifying vehicles as complying with the FMVSS.

In addition, NHTSA provided substantial leadtime. The rule becomes effective for multi-stage vehicles with a GVWR of 2,722 kilograms (6,000 pounds) or less, i.e., the vehicles already covered by FMVSS No. 216, on September 1, 2016, and for the other multi-stage vehicles with a GVWR of 4,536 kilograms (10,000 pounds) or less on September 1, 2017. These dates are one year after the requirements are fully effective for single stage vehicles.

B. The Current Certification Scheme Is Not an Unlawful Delegation of Agency Authority

NTEA argued that under the current certification scheme the ability of an interested private party to determine the legal responsibility of another party with respect to a safety standard, which it contends is the result of the incomplete vehicle manufacturer creating the IVD, amounts to an impermissible delegation of NHTSA's statutory authority to a private party.

NTEA made the same argument in its petition for reconsideration of the certification rule, and the agency addressed it in its May 2006 response to that petition.[35] As we explained in that response, NTEA relied on a case involving an unlawful delegation of an agency's authority to a private entity.[36] However, NTEA ignored the holding in that case, that the relevant inquiry on a private delegation issue is to assess Congressional intent, based on the pertinent statute(s) and its legislative history.

In the Vehicle Safety Act, Congress imposed the responsibility to certify compliance on manufacturers and distributors.[37] The Safety Act created a self-certification scheme. Under this statutory framework, the agency promulgates the FMVSSs, and it is then the manufacturer's or distributor's responsibility to comply with these standards and to furnish a certification to the distributor or dealer that the vehicle or equipment conforms to all applicable FMVSSs. The statute, as originally enacted, did not provide for agency review and approval of the manufacturer's certification or for agency allocation of responsibility of certification in the multi-stage vehicle context.

NHTSA's regulations do not provide for the agency to allocate certification responsibility between incomplete vehicle manufacturers and final-stage manufacturers.

In 2000, Congress enacted the Transportation Recall Enhancement, Accountability, and Documentation (TREAD) Act.[38] Section 9 of the Act amended 49 U.S.C. 30115 to address certification labels.[39] In general, the amendments required an intermediate or final-stage manufacturer to certify with respect to each FMVSS either that it has followed the compliance documents provided by the incomplete vehicle manufacturer or that it has chosen to assume responsibility for compliance with that standard.[40] The amendments further provided that if an intermediate or final-stage manufacturer assumes responsibility for compliance with a standard covered by the documentation, it must notify the incomplete vehicle manufacturer within a reasonable time.[41] Significantly, the TREAD Act amendments did not alter the regulatory approach in 49 CFR 567.5 and 49 CFR part 568. They did not require NHTSA to allocate certification responsibilities between the various manufacturers in the chain of production of multi-stage vehicles.

In contrast to this regulatory approach, Congress has enacted other regulatory schemes that require agency review and approval of manufacturers' certifications. For example, the Clean Air Act requires the Administrator of the Environmental Protection Agency (EPA) to test or require testing of motor vehicles or engines to determine whether they comply with the emissions requirements and, if they conform, to issue a certificate of conformity.[42] In that context, EPA has a significant administrative role. In contrast, in the Vehicle Safety Act, Congress did not provide for agency review or approval of a manufacturer's certification before first sale. Moreover, the TREAD Act amendments specifically addressed certification in the multi-stage vehicle context and did not assign the agency an arbiter role in the certification process.

In view of the foregoing, NHTSA does not accept NTEA's argument that the certification scheme in NHTSA's regulations delegates too much power to a private entity.

C. Current IVDs Concerning FMVSS No. 216 Are Workable

NTEA submitted with its comment relevant portions of the IVDs with Type 1 conformity statements for the General Motors 2006 GMT–355 incomplete truck and also the IVD for the GM 2006 C/K full size incomplete truck.[43] NTEA attached these documents to demonstrate that the simplest installation of a truck body likely weighing several hundred pounds, plus the means used by the final-stage manufacturer to mount that body (e.g., by drilling holes into the frame of the chassis-cab and bolting the body to the frame) will affect the physical properties, e.g., of the chassis frame and numerous other structural components of the chassis-cab.

GM's IVD allows for additions to the chassis-cab. The GMT–355's IVD states that the incomplete vehicle will comply with FMVSS No. 216 "providing no alterations are made which affect the function, physical, chemical, or mechanical properties, environment, location, or vital spatial clearances of the components, assemblies or systems including but not limited to those listed below: antennae; body roof structure or components/reinforcements; body sheet metal/reinforcements; body structural components/reinforcements; front rear and side glazing materials and mounting; structural components and door assemblies; windshield wipers; and windshield wiper motor."

NTEA read the IVD and claimed that adding a box to a chassis-cab frame would affect the physical, chemical, or mechanical properties of the body's structural components/reinforcements. Based on this statement, NTEA concluded that pass-through certification is not available. NHTSA disagrees.

Before turning to the specifics, we note that NTEA characterized the FMVSS No. 216 test as a dynamic test. As a technical matter, the test is considered a quasi-static test rather than a dynamic test. In a quasi-static test, the conditions vary slowly enough so that

[34] This has been recognized in interpretations by NHTSA's Chief Counsel.

[35] 71 FR at 28186–87.

[36] *Nat'l Park and Conservation Ass'n* v. *Stanton,* 54 F.Supp. 2d 7 (D.D.C. 1999).

[37] *See* Section 114 of the Act, Public Law 89–563, 80 Stat. 726 (recodified at 49 U.S.C. 30115).

[38] Public Law 106–414.

[39] 114 Stat. 1805.

[40] *Id.*

[41] *Id.*

[42] 42 U.S.C. 7525(a).

[43] NTEA stated that GM included an identical conformity statement for FMVSS No. 216 in its IVD for the GM 2006 C/K full size incomplete truck, although, to NTEA's knowledge, GM did not produce a C/K chassis rated 6,000 pounds GVW or below. FMVSS No. 216 would have applied to the vehicle only if it were rated with a GVWR of 2,722 kilograms (6,000 pounds) or less.

the dynamic effects are negligible.[44] In developing our proposal to upgrade FMVSS No. 216, we considered potential dynamic tests, e.g., the Jordan Rollover System test and the Controlled Rollover Impact System test, but decided to focus on the quasi-static test procedure. This was an issue that was addressed in detail in the rulemaking. The quasi-static test in this standard does, however, have some dynamic characteristics.[45] In any event, potential compliance difficulties relate to the specific details of a test and relevant requirements based on that test rather than whether the test is called quasi-static or dynamic.

We now turn to the GMT–355 incomplete vehicle. This incomplete vehicle is classified as a body-on-frame, as distinguished from unibody construction used in making passenger cars, which generally do not have frames. The cab is attached to the frame. Roof strength is dependent on structural members of the vehicle's largely vertical pillars, including the A pillar (between the windshield and the front of the front door) and the B pillar (behind the front door), and the roof itself.

In completing an incomplete GMT–355, the final-stage manufacturer adds a unit behind the cab. That unit or truck body is attached to the frame. Commonly, the attached unit is a box of some form that goods or materials can be carried in. The attached unit does not attach to the cab. Pass-through certification is readily available for this vehicle. The conformity statement in the IVD is written to allow modifications to the incomplete vehicle, but not to the components that affect the vehicle's roof strength.

While pass-through certification is not provided if vehicle components related to roof strength are modified, NTEA has not provided an example where the addition of a truck body would modify the structural members of the A- and B-pillars, and NHTSA is unaware of one. NTEA did not provide other examples where roof modifications would be necessary. In the example of mounting a box to the frame, there would be no modifications to the roof.

D. Final-Stage Manufacturers Can Certify Their Vehicles Built on Chassis-cabs as Being Compliant With FMVSS No. 216a

FMVSS No. 216 has applied to multi-stage vehicles with a GVWR of 2,722 kilograms (6,000 pounds) or less since the early 1990s. Despite NTEA's articulated problems with the GMT–355 IVD, final-stage manufacturers undoubtedly have made additions to this incomplete vehicle and certified it compliant. Otherwise, GM would not have offered it for sale for years.

There are a number of resources available for final-stage manufacturers. Many of these were mentioned in the 2006 response to NTEA's petition.[46] These resources are still available. For example, General Motors has relationships with final-stage manufacturers, which it refers to as "Special Vehicle Manufacturers," or SVMs. According to GM Upfitters' Best Practices Manual, "[t]he success of the Upfitter Integration group depends on an atmosphere of communication, cooperation and trust between SVMs and GM. SVMs would therefore be expected to use the Upfitter Integration resources available to them (i.e., telephone hotline, quality surveys, guideline manuals and Upfitter Integration engineering expertise). SVMs are expected to have documented processes which are understood and accepted by all." (p. 4).[47]

According to the GM Upfitters' Best Practices Manual, NTEA reviews and recommends Body-Mounting Practices in the GM Upfitters' Best Practices Manual that identifies industry recognized processes and procedures. NTEA has a "Body Practices Subcommittee" that reviewed the mounting methods of several chassis manufacturers. NTEA approved four general mounting types. All mount to the frame and are permissible under the IVD for the GMT–355. None of the mounting methods involve attachments to the A- and B-pillars.

A final-stage manufacturer is not limited to the IVD. If a final-stage manufacturer wanted to make modifications beyond the IVD, it could still use the IVD as a starting point and then utilize technical judgment. This is different from a vehicle built on a stripped chassis where the final-stage manufacturer would be designing the complete occupant compartment structure. The final-stage manufacturer is beginning with a vehicle with a completed occupant compartment structure, including the roof, that it knows already meets FMVSS No. 216, and can use judgment to ensure that the modifications it makes will not weaken the roof. As such, a final-stage manufacturer could complete the vehicle and certify it.

In the case of chassis-cabs, for example, data are available on the strength of the roofs. Chassis-cabs have intact roof designs and for the most part are the same as vehicles that are sold as complete vehicles, such as large pickup trucks. The roof structures of those trucks will be designed to meet the upgraded requirements of FMVSS No. 216. NHTSA tests vehicles, including pickup trucks, to FMVSS No. 216 and makes the data available.[48] Final-stage manufacturers can readily refer to these data for certification.

NTEA also argued that Ford provided guidance for 10 safety standards in its 2006 Pickup Box Removal/Alterations Design Recommendations for the pick-up box removal for the Ford Ranger, but not for FMVSS No. 216 (p. 8 of NTEA's comments, footnote 4). It said that, therefore, in the alterer context, the alterer is on its own as to the roof crush resistance standard. We note that Ford's 2006 Pickup Box Removal/Alterations Design Recommendations do not involve incomplete vehicles. The Ranger is not sold as an incomplete vehicle. Ford's recommendations are for

[44] That is the case with the lowering of the FMVSS No. 216 test device. In the FMVSS No. 216 test procedure, a test device applies a force, based on the vehicle's unloaded weight, to the vehicle's roof. The lower surface of the test device must not move more than the specified distance. The May 2009 final rule maintained the fundamental nature of the test.

[45] We believe the quasi-static test has sufficient dynamic characteristics that we would consider the new procedures adopted by the agency in the 2005 and 2006 certification rules for applying for temporary exemptions to be available for FMVSS No. 216, although we are not aware of any specific situations in which they would be needed. In those rules, NHTSA amended its regulations to establish a new process under which intermediate and final-stage manufacturers and alterers can obtain temporary exemptions from dynamic performance requirements of certain standards. While the 2005 rule limited this process to dynamic crash test requirements, in response to NTEA's petition, the agency expanded the scope of the availability of the new procedures in the 2006 rule so that manufacturers of multi-stage vehicles can petition the agency for a temporary exemption from requirements that incorporate various dynamic tests generally, and not exclusively dynamic crash tests. NHTSA explained that a dynamic test is one that requires application of forces or energy to the vehicle and the FMVSS include a variety of dynamic tests in addition to those involving crash tests. The agency noted that in some circumstances, there may be considerable costs associated with dynamic tests other than dynamic crash tests, and there may be significant damage to vehicles from such tests. Given the broad language used in characterizing dynamic tests, we would consider the procedures to be available for the quasi-static test specified by FMVSS No. 216. The test does require application of forces or energy to the vehicle and may result in significant damage to the vehicle.

[46] 71 FR 28185

[47] *http://www.gmupfitter.com/publicat/Best_Practices.pdf.*

[48] For example, there are data available on NHTSA's testing of pickup trucks. NHTSA's testing of completed trucks under 6,000 lbs shows the following: (a) MY 2007 Chevy Colorado, GVWR = 4850 lbs, SWR 2.18 (Test 560), (b) MY 2007 Toyota Tacoma, GVWR = 5250 lbs, SWR 3.29, (Test 566), (c) MY 2007 Toyota Tacoma, GVWR = 4550 lbs, SWR 4.4 (Test 530).

alterers [49] that remove a pick-up box from a completed vehicle. Ford has already certified that vehicle. The document cited in NTEA's comment is guidance and is not required under 49 CFR 567.7 for certification.

Moreover, we have reviewed the Ford document in question and believe that NTEA has not shown a real problem for alterers. For pickup trucks such as the Ranger, the passenger compartment is completely separate from the cargo box. Each is separately secured to a common frame. For this reason, simply replacing the pickup box with an aftermarket body would not affect the strength of the roof.[50]

In the FMVSS No. 216a test procedure adopted in the 2009 final rule, the body of the vehicle is securely mounted. In the case of a body-on-frame pickup truck, the occupant compartment cab would be rigidly mounted such that only the roof strength of the occupant compartment of the vehicle is tested. In support of the final rule, the agency tested a number of pickup trucks in one- and two-sided test configurations.[51] In addition, the agency also tested an incomplete 2008 Ford F–250 (NHTSA Test No. 571) [52] chassis-cab pickup. The F–250 was delivered and tested without a cargo bed. From our testing, the presence of the cargo box did not have any impact on the strength of the roof.[53]

NTEA also stated that for the 2004 model year, Ford produced the Freestar/Monterey van as an incomplete vehicle to be used in the manufacturer of mobility vehicles. It stated that these vehicles had a GVWR of 2,722 kilograms (6,000 pounds) or less, and were thus subject to FMVSS No. 216. NTEA stated that for reasons that are unclear, Ford did not provide a conformity statement for FMVSS No. 216 in the IVD for this vehicle. NTEA stated that this is a situation where the final-stage manufacturer would have no pass-through certification opportunity. NHTSA notes that the Freestar/Monterey vans have not been produced for years and NTEA did not demonstrate that the issue is likely to recur with newer models. We note, however that Ford has a mobility vehicle program, for transporting handicapped people, and NTEA has not demonstrated that there are any problems with respect to availability or certification of mobility vehicles. We also note that NMEDA did not cite any such difficulties. In addition, Ford has programs to assist mobility manufacturers.[54]

FMVSS No. 216 is not, of course, currently applicable to vehicles with a GVWR greater than 2,722 kilograms (6,000 pounds). For that reason, the IVDs for chassis-cabs currently used for these heavier vehicles do not and cannot be expected to address FMVSS No. 216. However, as the upgraded standard will apply to these vehicles, manufacturers will address it in the future.[55]

E. In General, IVDs Are Workable

NTEA claimed that IVDs containing conformity statements for standards other than FMVSS No. 216 are overly restrictive. It cited the conformity statements provided by GM for the C/K fullsize pickup truck IVD. It also cited the IVD provided by Ford for the E-series incomplete vehicle with respect to FMVSS Nos. 212, 219 and 301. NTEA stated that the conformity statements are based on the performance of the vehicle in the dynamic tests in those standards.

As noted earlier, in our May 2006 response to NTEA's petition for reconsideration of the certification rule, we addressed in detail NTEA's arguments in connection with the certification statements in the GM IVD that NTEA identified as inadequate. In each case, the agency's findings supported the conclusion that the existing IVDs are workable. Moreover, we demonstrated that the current multi-stage certification is workable and pointed out the errors in NTEA's arguments. Among other things, we noted that NTEA's petition did not identify any final-stage manufacturer that has been unable to certify a vehicle under the existing framework. Since this rulemaking is about FMVSS No. 216, and given the above discussion, there is no need to address other standards.

The final rule becomes effective for multi-stage vehicles with a GVWR of 2,722 kilograms (6,000 pounds) or less, i.e., the vehicles already covered by FMVSS No. 216, on September 1, 2016, and to the other multi-stage vehicles with a GVWR of 4,536 kilograms (10,000 pounds) or less on September 1, 2017. These dates are one year after the requirements are fully effective for single stage vehicles. This is a seven-year leadtime for vehicles currently subject to the standard, and an eight-year leadtime for the vehicles newly subject to the standard. NHTSA anticipates that this leadtime will be ample for incomplete vehicle manufacturers and final-stage manufacturers to work out any issues.

F. NHTSA Provided a Testing Alternative, FMVSS No. 220

NTEA commented that final-stage manufacturers of vehicles built on incomplete vehicles other than chassis-cabs (cutaways, chassis cowls,[56] or stripped chassis) cannot rely on pass-through certification or perform the tests in FMVSS Nos. 216 or 220. It did not agree with statements in the NPRM that the existence of State operational requirements for para-transit vans and other buses to comply with FMVSS No. 220 is good evidence that final-stage manufacturers in fact are able to comply with that standard. It also said that the fact that final-stage manufacturers are able to comply with FMVSS No. 220 for some vehicles merely reflects the particular manufacturing of that vehicle, and the fact that certain niche markets can comply with FMVSS No. 220 does not translate to final-stage manufacturers that produce scores of vehicles in small production runs. NTEA thus advocated a lowest common denominator approach.

NHTSA sees no reason to exclude all multi-stage vehicles from the requirements of FMVSS No. 216. We do recognize, unlike vehicles derived from chassis-cabs, there will not be an opportunity for a pass-through certification of FMVSS No. 216 for vehicles without intact roofs such as cutaways and stripped chassis. In light of this, in the 2009 final rule, for multi-stage trucks, NHTSA decided not to extend the coverage of the upgraded FMVSS No. 216 as proposed in the NPRM. Multi-stage trucks not built on a chassis-cab or a full exterior van body with a GVWR greater than 2,722 kilograms (6,000 pounds) are not covered. This is discussed below.

[49] An alterer "means a person who alters by addition, substitution, or removal of components (other than readily attachable components) a certified vehicle before the first purchase of the vehicle other than for resale." 49 CFR 567.3.

[50] The weight of the aftermarket body could affect the unloaded weight of the vehicle and, therefore, the amount of force the vehicle would need to withstand in a FMVSS No. 216 test. If replacing the pickup box with an aftermarket body resulted in greater unloaded vehicle weight, the alterer could consult with the manufacturer about implications for FMVSS No. 216 compliance.

[51] 74 FR 22391, Appendix B and C.

[52] Test reports available at *http://www-nrd.nhtsa.dot.gov/database/aspx/comdb/querytesttable.aspx.*

[53] The F–250 chassis-cab's roof resisted a maximum force of just over 54,000 N when the first side of the roof was tested. In a test conducted with a 2003 Ford F–250 with the cargo bed attached, the roof resisted over 44,000 N on the first side. The difference in peak strength of the roof is attributed to the vehicles being different body styles for different model year vehicles.

[54] See *https://www.fleet.ford.com/truckbbas/non-html/qpg/2004/mobilityguidelines04.pdf.*

[55] See 49 CFR 568.4.

[56] An incomplete vehicle which is similar to a stripped chassis but includes a portion of the body bounded by the front fenders, hood and base of the windshield.

Multi-stage trucks with a GVWR of 2,722 kilograms (6,000 pounds) or less have already been subject to FMVSS No. 216, and no practicability issues have been identified. While there are differences between the existing requirements and those of the upgraded standard, the basic nature of the FMVSS No. 216 test is the same, i.e., a quasi-static test that applies a force to the roof. Moreover, the FMVSS No. 220 option will also be available (other than for trucks built using chassis-cabs). Given these considerations, we believe that these vehicles do not raise practicability concerns. We note that we are not aware of any incomplete cutaway vehicles with a GVWR of 2,722 kilograms (6,000 pounds) or less.

We decided not to extend the standard to multi-stage trucks with a GVWR above 2,722 kilograms (6,000 pounds) not built on a chassis-cab or a full exterior van body. The incomplete vehicles for these excluded multi-stage trucks will not have an intact roof, and because the strength of the roof may be dependent on the structure to be added by the final-stage manufacturer in completing the truck, the incomplete vehicle manufacturer may not provide for pass-through certification. Moreover, the FMVSS No. 220 test was designed for school buses and uses a horizontal plate over the driver and passenger compartment instead of the angled plate of Standard No. 216. This test may not be appropriate for trucks with certain roof configurations.

For the remaining multi-stage vehicles other than trucks, we believe that the FMVSS No. 220 option is a reasonable way to balance the need to increase safety in rollover crashes of multi-stage vehicles and the capabilities of multi-stage manufacturers. Examples of vehicles in this category include Type II ambulances,[57] small recreation vehicles, and shuttle vans with a GVWR greater than 2,722 kilograms (6,000 pounds) but not greater than 4,536 kilograms (10,000 pounds). Some of these vehicles involve vans with raised roofs.

First, NTEA's argument, which appears to be largely in the context of work trucks, on relatively unique configurations and very limited production numbers, does not truly apply. There are companies that make ambulances, other companies that make small RVs, and others that make shuttle vans. These vehicles are generally made in larger production runs and/or with relatively standardized exterior structures. Therefore, there are significantly fewer issues related to special structural issues potentially affecting roof configuration and roof strength for multipurpose vehicles and buses than for trucks which may have more specialized and customized uses.[58]

Second, these vehicles transport passengers, not property. While we are concerned about the safety of occupants in all kinds of vehicles, there is a greater safety concern about unnecessarily excluding passenger vehicles, such as 15-passenger vans and small shuttle buses from roof strength requirements, given the number of occupants.

NTEA is correct that current IVDs do not provide a Type I or Type II statement regarding FMVSS No. 220, *School Bus Rollover Protection.* The Type 3 statements for Ford and GM cutaway chassis used for school buses are reasonable given the fact that these incomplete vehicles do include occupant compartment structures. School bus manufacturers using these chassis provide their own occupant compartment structures, and have long certified their vehicles to FMVSS No. 220.

As we noted in the NPRM, several states already require "para-transit" vans and other buses, which are typically manufactured in multiple stages, to comply with the roof crush requirements of FMVSS No. 220. Moreover, the RVIA endorsed the agency's proposal. Recreational vehicles, including motorhomes, are used to transport passengers, not property, and are commonly built on stripped chassis. The RVIA stated that several thousand of the smallest motor homes produced each year would be subject to the proposed rule and that virtually all of the affected vehicles are manufactured in two or more stages. RVIA stated that NHTSA rightly acknowledged that the requirements of FMVSS No. 220 appear to offer a reasonable avenue to balance the desire to respond to the needs of multi-stage manufacturers and the need to increase safety in rollover crashes.

While NTEA claimed that the cited State laws are not good evidence that final-stage manufacturers in fact are able to confirm compliance of vehicles with FMVSS No. 220, it did not provide reasons for us to doubt manufacturer claims that their vehicles meet these requirements. We also note that the Ambulance Manufacturers Association of NTEA adopted a standard, AMD Standard No. 001, with a test based on FMVSS No. 220. AMD Standard No. 001, *Ambulance Body Structure Static Load Test,* is issued by the Ambulance Manufacturers Association of NTEA. The purpose of that standard is to demonstrate the static strength of the patient compartment of an ambulance when subjected to a uniform load. NTEA stated that an ambulance manufacturer recently had three units tested at a cost of $40,000, i.e., an amount slightly over $13,000 each. NTEA stated that ambulances are unlike most multi-stage vehicles in that most manufacturers produce a small number of models that require only limited alterations to meet specific customer needs and that, as a result, these testing costs, while still significant, can be allocated over multiple vehicle sales.

A limited internet search reveals that many manufacturers, including alterers, advertise that various mobility, para-transit and other vehicles meet the requirements of FMVSS No. 220.[59]

For example:

- National Van sells wheelchair vans/ambulettes with modified roofs that are said to be FMVSS No. 220 School Bus Rollover certified.[60] These can be built on the Ford E–150 chassis.
- New England Wheels sells a Municipal Transporter that has a 30″ raised transporter roof with a FMVSS No. 220 certified roll cage. New England Wheels also sells a Ford E–250 Van with an 18″ Executive Raised Roof w/FMVSS 220 Certified Roll Cage.[61]
- Accubilt sells a shuttle van with an 8,600 lbs GVWR that has an "exclusive tubular steel roll cage (FMVSS certified)."[62]
- MobilityWorks of Akron, Ohio advertises that "[a]ll MobilityWorks vehicles meet or exceed the requirements set forth for vehicles of gross weight less than 10,000 lbs." for the FMVSS No. 220 load test.[63]

[57] See the *Federal Specification for the Star-of-Life Ambulance* (KKK–A–1822F), as promulgated by the General Services Administration. *http://www.gsa.gov/gsa/cm_attachments/GSA_DOCUMENT/ambulanc_1_R2FI5H_0Z5RDZ-i34K-pR.pdf.*

[58] On a related note, as to school buses, NTEA has recognized that these vehicles are produced in relatively large production runs of similarly configured vehicles, and that Ford and GM provide guidance. NTEA stated that it expressed no view as to the practicability of FMVSS No. 220 for currently affected manufacturers.

[59] In some cases, the manufacturer indicates that a vehicle is "certified" to meet FMVSS No. 220. We note that unless an FMVSS applies to a vehicle, it cannot be certified to the FMVSS for purposes of the Vehicle Safety Act.

[60] *http://www.nationalvans.com/models/wheelchair_vans.html* (last accessed on January 17, 2010).

[61] *http://www.newenglandwheels.com/commercial-vans/municipal-transporter.html* (last accessed on January 17, 2010).

[62] *http://www.accubuiltmobility.com/shuttle_specs.html* (last accessed on January 17, 2010).

[63] *http://www.mobilityworks.com/Commercial/Commercial-Van-AboutUs.php* (last accessed on January 17, 2010).

• Mid America Coach of Kansas City, MO, sells full-size wheelchair vans with a FMVSS No. 220 roll cage.[64]

• Safety Vans, LLC, of Hagerstown, MD, sells vans with reinforced roofs for which "[r]oof load tests (FMVSS 220 compliant) demonstrate how the SafetyVan, under the weight of nearly 6 tons, is still capable of allowing access into and egress from the passenger area!"[65] According to the company, standard features for these vans include them being built on GM's Model CG 33706—Express/Savanna: Pass. Van Ext. 3500, 9,600 GVW.[66]

Furthermore, the agency conducted a FMVSS No. 220 roof strength test on a Roadtrek Class B MPV motorhome (Test No. 693) with a GVWR of 3,901 kg (8,600 pounds). The motorhome was built on a General Motors incomplete vehicle van body where the multi-stage manufacturer added a raised fiberglass roof to the body. The results of the test showed the vehicle met the 1.5 SWR required under the standard within 130 mm (5.125 inches) of displacement of the load application plate. The test illustrated that it is practicable for multi-stage vehicles with a raised or altered roof and with a GVWR greater than 2,722 kg (6,000 pounds) but less than 4,536 kilograms (10,000 pounds), to conform to the requirements of FMVSS No. 220 as an option.

G. There Is Little Cost for Multi-Stage Manufacturers To Comply With FMVSS No. 216a

NTEA commented that in proposing to upgrade FMVSS No. 216, the agency ignored more than 20 million dollars in compliance tests primarily placed on small businesses. That organization stated that there are at least 1,085 identifiable vehicle configurations in the affected weight category that would require separate testing. NTEA multiplied this figure by $5,000 per test plus a vehicle value loss of $15,000, resulting in a total of $21,700,000. The 1,085 vehicle configuration number included 798 that were based on chassis-cabs.[67]

These cost projections are grossly exaggerated. As indicated above, testing, as provided in a FMVSS, is not required as a matter of law to certify a vehicle. A manufacturer may choose any valid means of evaluating its products to determine whether the vehicle or equipment will comply with the safety standards when tested by the agency according to the procedures specified in the standard and to provide a basis for its certification of compliance.

NTEA's projected costs assume, inaccurately, that pass-through certification is not available for any of its member's vehicles, and, that they, as final-stage manufacturers, will need to conduct testing for these vehicles. However, for the reasons discussed earlier, final-stage manufacturers will be able to rely on the IVDs for vehicles built using chassis-cabs or incomplete vehicles with a full exterior van body. They will be able to certify their vehicles using pass-through and engineering judgment and will not need to incur testing costs for these vehicles.

Moreover, the agency did not adopt the proposal in the NPRM to extend FMVSS No. 216 to multi-stage trucks with a GVWR greater than 2,722 kilograms (6,000 pounds) not built on a chassis-cab and not built on an incomplete vehicle with a full exterior van body, e.g., those built using cutaways and stripped chassis. Therefore, there will not be any FMVSS No. 216 compliance costs for these vehicles.

As to other multi-stage vehicles, final-stage manufacturers will have the option of certifying with the FMVSS No. 216 test or the FMVSS No. 220 test. The FMVSS No. 220 test option will minimize the costs of compliance for these vehicles. As noted above, these vehicles are used to transport passengers. Various mobility, para-transit and other vehicles were also being designed to meet the FMVSS No. 220 test prior to this rulemaking. Models are produced in sufficient quantities and do not vary such that compliance tests would be required for each variation. In light of the above, the requirements are reasonable. Also, RVIA supported this aspect of the proposal.

We also observe that new procedures adopted by the agency in the 2005 and 2006 certification rules for applying for temporary exemptions are available, although we are not aware of any specific situations in which they would be needed.

H. Conclusion

While NTEA commented that the proposed upgrade of FMVSS No. 216 would be impracticable for its members, the final rule we adopted is not impracticable for final-stage manufacturers.

Final-stage manufacturers that build their vehicles using chassis-cabs will be able to rely on pass-through certification. A reasonable reading of the provided IVDs demonstrates this, as does the fact of the number of multi-stage vehicles on the road today that are certified to comply with many FMVSSs. In extending FVMSS No. 216 to heavier light vehicles, we did not include trucks other than those built using a chassis-cab or incomplete vehicle with a full exterior van body—a change from the NPRM. Also, for multi-stage vehicles other than those built using chassis-cabs, NHTSA provided an alternative test procedure that is used for school buses and has also been used by a number of States for para-transit buses. Many manufacturers are already building vehicles to this alternative.

Issued: April 2, 2010.

David L. Strickland,

Administrator.

[FR Doc. 2010–7907 Filed 4–6–10; 8:45 am]

BILLING CODE 4910–59–P

[64] *http://www.midamericacoach.com/category/full-size-wheelchair-vans* (last accessed on January 17, 2010).

[65] *http://www.safetyvans.com/index.html* (last accessed on January 17, 2010).

[66] *http://www.safetyvans.com/specs.html* (last accessed on January 17, 2010).

[67] NTEA stated that there are 42 chassis-cab models in the affected weight category that could accommodate 19 different body and/or equipment configurations. Multiplying 42 by 19 results in the 798 number.

DEPARTMENT OF TRANSPORTATION

National Highway Traffic Safety Administration

49 CFR Part 571

[Docket No. NHTSA–2009–0093]

RIN 2127–AG51

Federal Motor Vehicle Safety Standards; Roof Crush Resistance

AGENCY: National Highway Traffic Safety Administration (NHTSA), Department of Transportation.

ACTION: Final rule; correcting amendment.

SUMMARY: In May 2009 we published a final rule that upgraded the agency's safety standard on roof crush resistance. In this document, we correct two errors in that rule. We also identify errors in the preamble to that rule.

DATES: This rule is effective May 7, 2010.

FOR FURTHER INFORMATION CONTACT: For non-legal issues, you may call Christopher J. Wiacek, NHTSA Office of Crashworthiness Standards, telephone 202–366–4801. For legal issues, you may call J. Edward Glancy, NHTSA Office of Chief Counsel, telephone 202–366–2992. You may send mail to these officials at the National Highway Traffic Safety Administration, 1200 New Jersey Avenue, SE., West Building, Washington, DC 20590.

SUPPLEMENTARY INFORMATION: On May 12, 2009, as part of a comprehensive plan for reducing the serious risk of rollover crashes and the risk of death and serious injury in those crashes, NHTSA published in the **Federal Register** (74 FR 22348) [1] a final rule substantially upgrading Federal Motor Vehicle Safety Standard (FMVSS) No. 216, *Roof Crush Resistance.* The upgraded standard is designated FMVSS No. 216a.

In this document, we correct two errors in that rule. We also identify errors in the preamble to that rule.

We note that we are also publishing two separate documents related to the May 2009 final rule. One is a fuller response to comments submitted by the National Truck Equipment Association on our proposal to upgrade FMVSS No. 216. The other is a response to petitions for reconsideration of the May 2009 final rule.

Correcting Amendments

One of the correcting amendments incorporates a provision that was discussed in the preamble but inadvertently omitted from the regulatory text. As explained in the preamble, the agency decided to exclude a narrow category of multi-stage vehicles from FMVSS No. 216, multi-stage trucks with a GVWR greater than 2,722 kilograms (6,000 pounds) not built using a chassis cab or using an incomplete vehicle with a full exterior van body. We included a specific discussion concerning incomplete vehicles with a full exterior van body in the preamble,[2] but the regulatory text inadvertently omitted the reference to incomplete vehicles with a full exterior van body. We are correcting FMVSS No. 216a by adding that phrase at S3.1(a)(4).

The other correcting amendment corrects a cross-reference to the seat positioning procedure for the 50th percentile male dummy of FMVSS No. 214 *Side Impact Protection.* The reference is included in the introductory text of S7.2 of FMVSS No. 216a. As corrected, S7.2 specifically cross-references the seat positioning procedure for the 50th percentile male ES–2re dummy in S8.3.1 of FMVSS No. 214.

Errors in Preamble

Safety Analysis & Forensic Engineering, LLC (SAFE) brought to our attention errors in the preamble that incorrectly attributed to it the comments of another organization, Safety Analysis, Inc. Both of these organizations submitted comments.

The errors were included in a section of the preamble titled "Roof Crush as a Cause of Injury" beginning at 74 FR 22378, and in the immediately following section titled "Agency Response" at 74 FR 22379. Each of the references to SAFE in these sections should have been attributed to Safety Analysis, Inc. SAFE noted that there is no affiliation between SAFE and Safety Analysis, Inc. and also stated the most of the positions taken by SAFE in its comments are diametrically opposed to the positions taken by Safety Analysis, Inc. We apologize for these errors.

List of Subjects in 49 CFR Part 571

Imports, Motor vehicle safety, Motor vehicles, Rubber and rubber products, and Tires.

■ Accordingly, 49 CFR part 571 is corrected by making the following correcting amendments:

PART 571—FEDERAL MOTOR VEHICLE SAFETY STANDARDS

■ 1. The authority citation for part 571 of title 49 continues to read as follows:

Authority: 49 U.S.C. 322, 30111, 30115, 30117, and 30166; delegation of authority at 49 CFR 1.50.

■ 2. Section 571.216a is amended by revising S3.1(a)(4) and S7.2 introductory text to read as follows:

§ 571.216a Standard No. 216a; Roof crush resistance; Upgraded standard.

* * * * *

S3.1 *Application.*

(a) * * *

(4) Trucks built in two or more stages with a GVWR greater than 2,722 kilograms (6,000 pounds) not built using a chassis cab or using an incomplete vehicle with a full exterior van body.

* * * * *

S7.2 Adjust the seats in accordance with S8.3.1 of 49 CFR 571.214. Position the top center of the head form specified in S5.2 of 49 CFR 571.201 at the location of the top center of the Head Restraint Measurement Device (HRMD) specified in 49 CFR 571.202a, in the front outboard designated seating position on the side of the vehicle being tested as follows:

* * * * *

Issued on: April 2, 2010.

Stephen R. Kratzke,

Associate Administrator for Rulemaking.

[FR Doc. 2010–7909 Filed 4–6–10; 8:45 am]

BILLING CODE 4910–59–P

[1] Docket No. NHTSA–2009–0093.

[2] 74 FR at 22373.

DEPARTMENT OF TRANSPORTATION

National Highway Traffic Safety Administration

49 CFR Part 571

[Docket No. NHTSA–2009–0093]

Federal Motor Vehicle Safety Standards; Roof Crush Resistance

AGENCY: National Highway Traffic Safety Administration (NHTSA), Department of Transportation.

ACTION: Final rule; response to petitions for reconsideration.

SUMMARY: This document responds to two petitions for reconsideration of a May 12, 2009 final rule that upgraded the agency's safety standard on roof crush resistance. The first petition requested the agency to reconsider its decision to apply a lower roof strength-to-weight ratio requirement to heavier light vehicles, *i.e.,* ones with a gross vehicle weight rating greater than 2,722 kilograms (6,000 pounds), than to other light vehicles. The second requested reconsideration of that decision as well as the agency's decision not to adopt a dynamic rollover test requirement as part of this rulemaking. After carefully considering the petitions, we are denying them. This document also responds to supplemental requests made by the petitioners.

FOR FURTHER INFORMATION CONTACT: For non-legal issues, you may call Christopher J. Wiacek, NHTSA Office of Crashworthiness Standards, telephone 202–366–4801. For legal issues, you may call J. Edward Glancy, NHTSA Office of Chief Counsel, telephone 202–366–2992. You may send mail to these officials at the National Highway Traffic Safety Administration, 1200 New Jersey Avenue, SE., West Building, Washington, DC 20590.

SUPPLEMENTARY INFORMATION:

Table of Contents

I. Background
II. Petitions for Reconsideration
III. Today's Document and Related Actions
IV. Response to Petitions
A. Request That All Vehicles With a GVWR Not Greater Than 4,536 Kilograms (10,000 Pounds) Be Required To Meet a 3.0 SWR
1. May 2009 Final Rule Discussion
2. Overall Rationale for Request and Petitioners' Argument Concerning Costs
3. Petitioners' Argument Concerning Equity
4. Consequences of Lower Roof Crush Protection for Heavier Light Vehicles and Documentation From NTSB
5. Agency's Cost-Benefit Analysis
B. Request That Agency Adopt a Dynamic Testing Provision

1. May 2009 Final Rule Discussion
2. Overall Rationale for Request
3. Introduction to Response
4. Petitioner's Claim That Quasi-Static Test and Criteria Do Not Reasonably Differentiate Between the Injury Risk of Compliant and Non-Compliant Vehicles
5. Petitioner's Claim That JRS Test Device Has Been Available for Two Years and Extensive Test Data Submissions Show It To Be Reliable, Repeatable, Validated to Real World Injury Risk and Accurate in Assessing Comparative Injury Potential Performance

C. Other Issues

I. Background

On May 12, 2009, as part of a comprehensive plan for reducing the serious risk of rollover crashes and the risk of death and serious injury in those crashes, NHTSA published in the **Federal Register** (74 FR 22348) a final rule [1] substantially upgrading Federal Motor Vehicle Safety Standard (FMVSS) No. 216, *Roof Crush Resistance.*

First, for the vehicles currently subject to the standard, *i.e.,* passenger cars and multipurpose passenger vehicles, trucks and buses with a Gross Vehicle Weight Rating (GVWR) of 2,722 kilograms (6,000 pounds) or less, the rule doubled the amount of force the vehicle's roof structure must withstand in the specified test, from 1.5 times the vehicle's unloaded weight to 3.0 times the vehicle's unloaded weight. We note that this value is sometimes referred to as the strength-to-weight ratio (SWR), e.g., a SWR of 1.5, 2.0, 2.5, and so forth.

Second, the rule extended the applicability of the standard so that it will also apply to vehicles with a GVWR greater than 2,722 kilograms (6,000 pounds), but not greater than 4,536 kilograms (10,000 pounds). The rule established a force requirement of 1.5 times the vehicle's unloaded weight for these newly included vehicles.

Third, the rule required all of the above vehicles to meet the specified force requirements in a two-sided test, instead of a single-sided test, *i.e.,* the same vehicle must meet the force requirements when tested first on one side and then on the other side of the vehicle. Fourth, the rule established a new requirement for maintenance of headroom, *i.e.,* survival space, during testing in addition to the existing limit on the amount of roof crush. The rule also included a number of special provisions, including ones related to leadtime, to address the needs of multi-stage manufacturers, alterers, and small volume manufacturers.

The rulemaking action to improve roof strength was part of our comprehensive plan for addressing the serious problem of rollover crashes. There are more than 10,000 fatalities in rollover crashes each year. To address that problem, our comprehensive plan includes actions to: (1) Reduce the occurrence of rollovers, (2) mitigate ejection, and (3) enhance occupant protection when rollovers occur (improved roof crush resistance is included in this third category). A more complete discussion of our plan was included in the preamble to the May 2009 roof crush resistance final rule (74 FR 22348).

The roof crush final rule, by itself, addressed a relatively small subset of that problem. Our analysis shows that of the more than 10,000 fatalities, roof strength is relevant to only about seven percent (about 667) of those fatalities. We estimated that the May 2009 rule will prevent 135 of those 667 fatalities.

The portions of our comprehensive plan that will have the highest life-saving benefits are the ones to reduce the occurrence of rollovers (prevention) and to mitigate ejection (occupant containment). We estimate that by preventing rollovers, electronic stability control (ESC) will reduce the more than 10,000 fatalities that occur in rollover crashes each year by 4,200 to 5,500 fatalities (and also provide significant additional life-saving benefits by preventing other types of crashes). In the area of mitigating ejection, significant life-benefits are and/or will occur by our continuing efforts to increase seat belt use and our rulemaking on ejection mitigation. We note that on December 2, 2009, we published in the **Federal Register** (74 FR 63180) a notice of proposed rulemaking (NPRM) to establish a new safety standard to reduce the partial and complete ejection of vehicle occupants through side windows in crashes, particularly rollover crashes.

II. Petitions for Reconsideration

We received two petitions for reconsideration. One was jointly submitted by Advocates for Highway and Auto Safety, Center for Auto Safety, Consumer Federation of America and Ms. Joan Claybrook. We will refer to these petitioners jointly as "Advocates *et al.*" in the rest of this document. The other petition was submitted by the Center for Injury Research (CfIR).[2]

Advocates *et al.* requested reconsideration of the agency's decision to apply a lower SWR requirement to vehicles with a GVWR greater than 2,722 kilograms (6,000 pounds) than to lighter vehicles (1.5 SWR vs. 3.0 SWR).

These petitioners argued that NHTSA's overall rationale for the 1.5 SWR requirement is inadequate, and that the agency has a duty to provide uniform, equal levels of safety protection to vehicle occupants in all light vehicles without regard to distinctions based on what they consider to be arbitrary factors such as vehicle weight. They specifically argued that the agency did not establish any specific standard for judging the reasonableness of the costs involved in increasing the stringency of the SWR for vehicles greater than 2,722 kilograms (6,000 pounds).

Advocates *et al.* made a variety of additional arguments in support of their request, including ones related to how the agency has addressed reasonableness of costs in a prior rulemaking, a claim that the consequences of inadequate roof protection for larger vehicles is more severe than for light passenger vehicles, concerns about 15-passenger vans, National Transportation Safety Board (NTSB) investigations and recommendations, and a claim that the agency's cost-benefit analysis underestimates the number of lives that could be saved by much stronger roofs.

CfIR asked us to reconsider the final rule with respect to the lower SWR requirement for heavier light vehicles, and also with respect to our decision not to adopt a dynamic test. That petitioner cited three basic reasons for NHTSA to reconsider the final rule. First, it argued that the quasi-static test and criteria does not reasonably differentiate between the injury risk of compliant and non-compliant vehicles. Second, CfIR argued that contrary to NHTSA assertions, the Jordan Rollover System (JRS) dynamic test has been available for two years and extensive data submissions show it to be reliable, repeatable, validated to real world rollover injury risk and accurate in assessing comparative injury potential performance. Third, CfIR argued that drivers and passengers of heavier light vehicles up to 4,536 kilograms (10,000 pounds) GVWR deserve the same rollover protection as occupants of vehicles with a GVWR of 2,722 kilograms (6,000 pounds) or less. This petitioner argued that these heavier vehicles are often less stable, occupants are more vulnerable and the vehicles are used more frequently in off-road transportation.

In its petition, CfIR cited numerous submissions it had made to the docket. This petitioner requested that the agency review the data previously

[1] Docket No. NHTSA–2009–093.

[2] Petitions for reconsiderations are available in Docket No. NHTSA–2009–093.

submitted and summarized in its petition and consider the following actions: adjust the rule to allow for an alternate dynamic compliance test, propose and allow for an alternative dynamic test for the agency's New Car Assessment Program (NCAP) ratings, allow for non-compliance or compliance exceptions based on submitted dynamic test evidence, correct statements made by the agency regarding the JRS' repeatability and reliability in testing a vehicle's dynamic performance that the petitioner considers to be misleading and inaccurate, and apply the same SWR for lighter vehicles to heavier vehicles with passenger seating positions of three or more. CfIR also claimed that the agency made errors with respect to the target population used to identify benefits and in addressing the effect of roof racks on the strength of the roof.

In September 2009, CfIR submitted a document it called a "supplement" to its petition for reconsideration. It attached a document discussing JRS test results which it said indicate that an SWR of 4.1 is required to minimize roof crush injury potential. CfIR stated that it requested reconsideration of JRS dynamic testing for the final rule for two reasons: (1) Insurance Institute for Highway Safety's [3] (IIHS) SWR of 4 or greater has gained industry acceptance and timely voluntary compliance, and (2) the JRS test fixture accurately measures post crash negative headroom and can assess the injury potential of occupant protection systems. It stated that its supplement requests further (1) raising the static test criteria to the dynamically derived SWR criteria of 4, and (2) initiating a dynamic rollover crashworthiness NCAP program using the JRS fixture.

CfIR also provided the agency a copy of a document titled "Scientific Review & Evaluation of the Jordan Rollover System (JRS) Impact Crash Test Device." [4]

III. Today's Document and Related Actions

In this document, we provide our response to the petitions for reconsideration of the May 2009 final rule upgrading FMVSS No. 216.

We are also publishing two separate documents related to the May 2009 final rule. One is a fuller response to comments submitted by NTEA on our proposal to upgrade FMVSS No. 216. The other is a correcting rule. The correcting rule incorporates a provision that was discussed in the preamble but inadvertently omitted from the regulatory text. As explained in the preamble, the agency decided to exclude a narrow category of multi-stage vehicles from FMVSS No. 216 altogether, multi-stage trucks with a GVWR greater than 2,722 kilograms (6,000 pounds) not built on either a chassis cab or an incomplete vehicle with a full exterior van body. The regulatory text inadvertently omitted the reference to incomplete vehicles with a full exterior van body.

IV. Response to Petitions

After carefully considering the two petitions, we have decided to deny them. The reasons for our denial are set forth below. Our discussion is divided into two main sections, one addressing issues related to the lower SWR requirement for heavier light vehicles and the other addressing issues related to our decision to adopt a quasi-static test requirement.

A. Request That All Vehicles With a GVWR Not Greater Than 4,536 Kilograms (10,000 pounds) Be Required To Meet a 3.0 SWR

1. May 2009 Final Rule Discussion

In our May 2009 final rule, we adopted an SWR requirement of 3.0 for vehicles with a GVWR of 2,722 kilograms (6,000 pounds) or less, and 1.5 for vehicles with a GVWR greater than 2,722 kilograms (6,000 pounds) and less than or equal to 4,536 kilograms (10,000 pounds).

In the preamble to that document, we explained that while the rulemaking involved a number of key decisions, the selection of an SWR requirement was the most important one for both costs and benefits. We note that our analysis, presented in detail in the Final Regulatory Impact Analysis (FRIA), showed that for the alternatives we evaluated, benefits in terms of reduced fatalities continued to rise with higher SWR levels due to reduced intrusion. For vehicles designed to have higher SWR levels, the benefits continued to rise because the vehicle roofs experience less intrusion in higher severity crashes. We explained further, however, that costs also increase substantially with higher SWR levels, so NHTSA needed to select the appropriate balance of safety benefits to added costs.

We explained that under the Safety Act, NHTSA must issue safety standards that are both practicable and meet the need for motor vehicle safety. 49 U.S.C. § 30111(a). The agency considers economic factors, including costs, as part of ensuring that standards are reasonable, practicable, and appropriate.

In Motor Vehicle Manufacturers Association v. State Farm, 463 U.S. 29, 54–55 (1983), the Supreme Court indicated that the agency was correct, in making its decisions about safety standards, to consider reasonableness of monetary and other costs associated with the standards. With respect to the agency's future revisiting of its earlier conclusion that the cost of detachable automatic seat belts was unreasonable in relation to the expected benefits from such belts, the Court stated, however, that "(i)n reaching its judgment, NHTSA should bear in mind that Congress intended safety to be the preeminent factor under the Motor Vehicle Safety Act:"

> "The Committee intends that safety shall be the overriding consideration in the issuance of standards under this bill. The Committee recognizes * * * that the Secretary will necessarily consider reasonableness of cost, feasibility and adequate leadtime." S.Rep. No. 1301, at 6, U.S. Code Cong. & Admin. News 1966, p. 2714.
>
> "In establishing standards the Secretary must conform to the requirement that the standard be practicable. This would require consideration of all relevant factors, including technological ability to achieve the goal of a particular standard as well as consideration of economic factors. Motor vehicle safety is the paramount purpose of this bill and each standard must be related thereto." H.Rep. No. 1776, at 16.

We explained that, in making our decision concerning SWR, we were guided by the statutory language, legislative history, and the Supreme Court's construction of the Safety Act, as well as by the specific requirement in the Safe, Accountable, Flexible, Efficient Transportation Equity Act: A Legacy for Users (SAFETEA–LU) for us to upgrade FMVSS No. 216 relating to roof strength for driver and passenger sides for motor vehicles with a GVWR of not more than 4,536 kilograms (10,000 pounds). We explained that we considered both costs and benefits, bearing in mind that Congress intended safety to be the preeminent factor under the Safety Act.

As indicated above, our analysis showed that while benefits continued to rise with higher SWR levels, costs also increase substantially. We explained that the challenge was to push to a level where the safety benefits are still reasonable in relation to the associated costs. We explained further that, as part

[3] In March 2009, the IIHS launched a new roof strength rating system. According to the IIHS, a metal plate is pushed against one side of a roof at a constant speed. To earn a good rating, the roof must withstand a force of 4 times the vehicle's weight before reaching 5 inches of crush. This is called a strength-to-weight ratio. For an acceptable rating, the minimum required strength-to-weight ratio is 3.25. A marginal rating value is 2.5. Anything lower than that is poor. *http://www.iihs.org/news/rss/pr032409.html*

[4] Available in Docket No. NHTSA–2009–093.

of this, we considered issues related to cost effectiveness. We noted that the agency's analysis of cost effectiveness was presented in the FRIA and summarized in the preamble.

We also explained that another important factor in the selection of the SWR requirements was that there are much higher costs relative to benefits associated with any level SWR requirement for vehicles with a GVWR greater than 2,722 kilograms (6,000 pounds) as compared to the lighter vehicles that were already subject to the standard.

We noted that there are a number of reasons for this differential between heavier and lighter vehicles. The absolute strength needed to meet a specific SWR is a function of the vehicle's unloaded weight. By way of example, to meet a 2.0 SWR, an unloaded vehicle that weighs 1,360 kilograms (3,000 pounds) must have a roof structure capable of withstanding 26,690 N (6,000 pounds) of force, while an unloaded vehicle that weighs 2,268 kilograms (5,000 pounds) must have a roof structure capable of withstanding 44,482 N (10,000 pounds) of force. This means more structure or reinforcement are needed for the heavier vehicle, which means more cost and weight. Moreover, vehicles in the heavier category have not previously been subject to FMVSS No. 216, so they have not been required to meet the existing 1.5 SWR single-sided requirement.

We also noted that, at the same time, these heavier vehicles account for only a very small part of the target population of occupants who might benefit from improved roof strength. Only 5 percent of the fatalities in the overall target population (33 in terms of a specific number) occur in vehicles over 2,722 kilograms (6,000 pounds) GVWR. Ninety-five percent of the fatalities (635 in terms of a specific number) occur in vehicles under 2,722 kilograms (6,000 pounds) GVWR. These differences reflect the fact that there are far fewer vehicles in this category in the on-road fleet, and may reflect their frequency of use as working vehicles.

We stated that we recognized the argument that all light vehicles should meet the same SWR requirements, to ensure the same minimum level of protection in a rollover crash. We explained, however, that in selecting particular requirements for a final rule, we believed that our focus needed to be on saving lives while also considering costs and relative risk. We stated (74 FR 22360):

> What is necessary to meet the need for safety and is practicable for one type or size of vehicle may not be necessary or reasonable, practicable and appropriate for another type or size of vehicle. Thus, to the extent the goal of establishing the same SWR requirements for all light vehicles would have the effect of either unnecessarily reducing the number of lives saved in lighter vehicles or imposing substantially higher, unreasonable costs on heavier vehicles despite their lesser relative risk, we believe it is appropriate to adopt different requirements for different vehicles. We also observe that because the same SWR requirement is significantly more stringent for heavier vehicles than lighter vehicles (due to SWR being a multiple of unloaded vehicle weight), establishing the same SWR requirement for heavier vehicles is not simply a matter of expecting manufacturers to provide the same countermeasures as they do for light vehicles.

We included specific explanations as to why we adopted a 3.0 SWR requirement for vehicles with a GVWR of 2,722 kilograms (6,000 pounds) or less and a 1.5 SWR requirement for vehicles with a GVWR greater than 2,722 kilograms (6,000 pounds).

While we will not repeat all of the details of the reasons we provided for our decision concerning the 3.0 SWR required for vehicles with a GVWR of 2,722 kilograms (6,000 pounds) or less, we noted that an SWR requirement of 3.0 prevented about 66 percent more fatalities than one at 2.5, 133 instead of 80. However, costs increased by a considerably higher percentage, resulting in a less favorable cost per equivalent life saved, $5.7 million to $8.5 million for 3.0 SWR as compared to $3.8 million to $7.2 million for 2.5 SWR. We explained that in these particular circumstances, we believed that a 3.0 SWR requirement was appropriate and the costs reasonable given the increased benefits. We explained that while the cost per equivalent life saved was relatively high compared to other NHTSA rulemakings, we concluded that the higher safety benefits, the legislative mandate for an upgrade, the technical feasibility of making roofs this strong, and the fact that these costs were generally within the range of accepted values justified moving NHTSA's roof crush standards to a 3.0 SWR for vehicles that have been subject to the 1.5 SWR requirements.

As to vehicles with a GVWR greater than 2,722 kilograms (6,000 pounds), we noted that these vehicles are not currently subject to FMVSS No. 216 and, because of their greater unloaded vehicle weight, these vehicles posed greater design challenges. These heavier vehicles also tend to have greater variations in packaging options (4-wheel drive, extended/crew cabs, engine size, etc.) which span a larger range of unloaded vehicle weights for a given body design. In response to the NPRM, vehicle manufacturers noted that to minimize their manufacturing tooling costs, they would need to design their roof strength performance to the worst-case weight for a given model line. We also noted that given the relatively small target population for these vehicles, the benefits will necessarily be small regardless of the SWR selected.

We explained that after considering our original proposal of a SWR of 2.5 and the available information, we concluded that a SWR of 1.5 was appropriate for these heavier vehicles. We noted that the requirement we were adopting is more stringent than the longstanding requirement that has applied to lighter vehicles until this rulemaking because it is a two-sided requirement. The FRIA estimated that two fatalities and 46 nonfatal injuries will be prevented annually by this requirement. We stated that because of the high cost relative to the benefits for all of the alternatives for these heavier vehicles, from the 1.5 SWR alternative and above, any alternative we select would adversely affect the overall cost effectiveness of this rulemaking (covering all light vehicles).

We stated that we believed that a SWR of 1.5 is appropriate for these heavier vehicles. We stated that given the requirements of SAFETEA–LU, we needed to ensure that the standard results in improved real world roof crush resistance for these vehicles. We declined, however, to adopt a SWR higher than 1.5 for vehicles with a GVWR greater than 2,722 kilograms (6,000 pounds), given the small additional benefits (4 additional lives saved and 137 nonfatal injuries prevented) and substantially higher costs. We explained that adopting a SWR of 2.0 for these vehicles would more than double the costs of the rule for these vehicles.

2. Overall Rationale for Request and Petitioners' Argument Concerning Costs

In their petition for reconsideration, Advocates *et al.* argued that the agency's rationale for a SWR of 1.5 for heavier light vehicles is inadequate. While they conceded that cost burdens are a consideration to be taken into account, these petitioners claimed that the agency had unwarrantedly elevated cost considerations above the need to secure substantial increases in benefits for people involved in rollover crashes in light vehicles above 2,722 kilograms (6,000 pounds) GVWR.

While the petitioners acknowledged the agency's discussion of the Supreme Court's decision in *Motor Vehicle*

Manufacturers Association v. *State Farm,* they argued that NHTSA did not establish any specific standard for judging the reasonableness of costs involved in increasing the stringency of the SWR for vehicles greater than 2,722 kilograms (6,000 pounds). They stated that the point at issue, whether the costs are reasonable with respect to higher SWR levels for these vehicles, was not independently established by an appeal to any specific, recognized test that the agency sets forth for objective assessment of "what costs are tolerable for gaining additional safety benefits."

While we believe that the basis for our decision concerning SWR was adequately presented and explained in the final rule, we will provide a more detailed discussion in responding to the petitions for reconsideration.

We begin by elaborating on our earlier discussion of the Supreme Court's statement in *State Farm* that safety is the pre-eminent factor in vehicle safety rulemaking. We note that neither the Court nor the passages of legislative history it quoted suggested that the pre-eminence of safety considerations leaves no significant role for other considerations to influence rulemaking decisions. The Court's opinion, as well as each of the two passages of legislative history, all emphasize that it is necessary and appropriate to consider costs as well as other non-safety factors, in making those decisions. We take the pre-eminence of safety to mean that strict considerations of economic efficiency do not govern vehicle safety rulemaking. We do not, however, understand it to mean that we must establish requirements whose benefits are mathematically significantly disproportionate to their costs, especially when the costs are large in absolute terms.

As to the suggestion that we establish a specific numerical test for determining whether costs are reasonable in relation to likely benefits and apply it across the board to particular rulemakings, regardless of their individual circumstances, we decline to do so. Adoption of a formulaic calculus of decisionmaking would preclude a careful, fact-based assessing and weighing of competing considerations. We must consider all relevant factors in the context of the facts in any particular rulemaking, and therefore cannot consider safety in isolation or without due regard to those other factors.

We can, however, identify the types of facts that lead us to give careful scrutiny to reasonableness of costs in a rulemaking, and which lead us to place increased weight on this factor as we consider all other relevant factors in reaching a particular decision. Specifically, we give scrutiny to the issue of reasonableness of costs in rulemakings where our analyses indicate that either the overall rulemaking, or a significant portion of the rulemaking, is borderline with respect to whether it is cost beneficial, *i.e.,* whether the benefits of the rulemaking exceed the costs. Moreover, in situations where either the overall rulemaking or a significant portion of the rulemaking appears likely to result in net disbenefits, *i.e.,* net losses, our scrutiny increases as the size of the potential net disbenefits increases, and the weight we accordingly place on this factor increases.

The agency did weigh the competing considerations and relevant factors for this rule. Although Advocates *et al.* argue that the agency merely cited the fact that there are increased costs, the agency presented detailed cost-effectiveness and benefit-cost analyses in its FRIA for the roof crush resistance final rule and summarized those analyses in the preamble. Among other items, these analyses looked at the number of fatalities that the rule would prevent. In fact, in the FRIA, NHTSA published a table summarizing costs and benefits for various SWR alternatives (1.5, 2.0, 2.5, 3.0, 3.5). The agency also considered one-sided and two-sided tests. *See* FRIA, pp. 125–134. Based on the analysis of the alternatives in the FRIA and after considering the comments received, the agency changed the SWR requirement from that included in the proposal. In the NPRM, the agency included a 2.5 SWR, one-sided requirement for all vehicles with a GVWR of 4,536 kilograms (10,000 pounds) or less. While the agency lowered the SWR requirement, as compared to the NPRM, to 1.5 for the heavier light vehicles in the final rule, the agency actually raised the SWR to 3.0 for vehicles with a GVWR of 2,722 kilograms (6,000 pounds) or less. This was done, in part, because doing so would prevent significantly more fatalities.

In an effort to respond to the petition of Advocates *et al.,* the agency is including a recitation of how the agency came to its conclusions relating to the change in SWR. As with any rule, the estimates of cost effectiveness rely on a number of important inputs and calculations.[5] For example, the cost effectiveness of the rule was estimated for each alternative using both 3% and 7% discount rates. The net benefits for each alternative represent the difference between total costs and the total monetary value of benefits.

In order to calculate net benefits, it is necessary to use a value per statistical life saved (VSL). Guidance from the Office of the Secretary of Transportation (OST) specifies a value of $5.8 million, with recommendations that values of $3.2 million and $8.4 million also be considered to account for uncertainty. We note that this guidance is available on the OST Web site.[6] We also note that the value of $5.8 million was adopted in February 2008 and represented an increase from an earlier value of $3.0 million that had been adopted in January 2002.

The monetary value of benefits used by NHTSA also included $300,000 in economic costs prevented. Thus, for our primary estimates, the monetary value of benefits was estimated by assigning a value of $6.1 million to each equivalent fatality prevented.

The FRIA includes cost-effectiveness and benefit-cost analyses for various alternatives considered by the agency. As noted in the preamble, nearly all alternatives covering vehicles from 2,723 and 4,536 kilograms (6,001 and 10,000 pounds) GVWR yield net losses rather than net savings to society. The agency's specific estimates of net benefits for two-sided test requirements with alternative SWRs are presented in the following table.[7]

NET BENEFITS; VEHICLES >2,722 KILOGRAMS (6,000 POUNDS); 2-SIDED TESTS; $5.8 MILLION VSL*

SWR alternative	Net benefits
1.5	$55 million to $180 million.
2.0	$123 million to $547 million.
2.5	$590 million to $1,189 million.
3.0	$1,280 million to $2,136 million.

*Based on $5.8 million VSL plus $300,000 economic costs.

This table shows that for light vehicles with a GVWR greater than

[5] It is important to note that many benefit and cost calculations changed between publication of the PRIA and FRIA. These changes are detailed in the FRIA. For example, the agency's inputs changed due to the increased use of electronic stability control and for increased seat belt use. The agency also made adjustments to calculations of costs. For example, the agency's cost inputs changed because the agency received more information concerning vehicle weight.

[6] *http://ostpxweb.dot.gov/policy/reports/080205.htm.*

[7] See Table VII–4 of the FRIA. We note that NHTSA identified minor errors in Table VII–4. The agency is placing a corrected table in the docket. The numbers presented in this document are the corrected numbers.

2,722 kilograms (6,000 pounds), all of these alternative SWRs, including the one we adopted, result in net losses to society, and also that net losses increase by a substantial amount at each higher alternative. For example, it is clear that going successively to each alternative above 1.5 can result in additional hundreds of millions of dollars of net losses. The net losses from the 3.0 SWR alternative, the one advocated by the petitioners, would be well in excess of a billion dollars.

We also note that consideration of uncertainties related to VSL does not significantly affect these numbers. The net losses are slightly higher using a VSL of $3.2 million and slightly lower using a VSL of $8.4 million. *See* Tables VII–5 and VII–6 of the FRIA. However, even using a VSL of $8.4 million, the net losses are $50 million to $174 million for an SWR of 1.5 and $101 million to $524 million for an SWR of 2.0, and continue to rise substantially for higher SWRs.

The FRIA presents cost-effectiveness and benefit-cost analyses in a number of different ways, including calculations of cost per equivalent life saved for different alternatives. The cost per equivalent life saved for all of the alternatives identified in the table above is well above the range of plausible VSL, *i.e.,* the range where they would be considered cost-beneficial. *See* Table VII–3 of the FRIA. We note that, while well above this range, the cost per equivalent life saved is slightly less disfavorable for a 2.0 SWR than a 1.5 SWR ($18.8 million to $72.0 million vs. $27.9 million to $90.3 million). However, given the small number of additional benefits and the substantially higher costs associated with the 2.0 SWR alternative, the net losses for this alternative are substantially higher than for the 1.5 SWR alternative ($123 million to $547 million vs. $55 million to $180 million). The cost per equivalent life saved for an SWR of 3.0 would be $88.4 million to $140.0 million.

NHTSA and other agencies evaluate cost-effectiveness and benefit-cost analyses as part of ensuring that they and the public are fully aware of the consequences of their rulemaking decisions. Societies have limited resources and many alternative ways of using those resources, including many alternative ways of reducing risks. To the extent that various regulatory alternatives result in increasingly high costs to achieve limited safety benefits and net losses to society rather than net benefits, they raise the issue of whether those societal resources could better be used elsewhere, especially when the net losses are substantial. While NHTSA has always placed primary importance on safety benefits, it has never considered safety without regard to cost implications.

In our May 2009 final rule, we adopted a SWR of 1.5 for the heavier light vehicles despite the fact that, at this level, our analyses showed that there would be net losses to society. The reasons for this are cited above. We declined, however, to adopt a SWR higher than 1.5 for vehicles with a GVWR greater than 2,722 kilograms (6,000 pounds). As we stated in the FRIA, "the cost/equivalent fatality for vehicles over 6,000 lbs. GVWR is roughly 12–16 times that for the lighter vehicles at any given SWR." [8]

The costs of the rule for these vehicles are substantial at 1.5 SWR, *i.e.,* $70.9 million to $195.0 million, and would increase to $182.3 million to $605.9 million for an SWR of 2.0. *See* Table VII–2 of the FRIA. Moreover, as noted above, given the small number of additional benefits and the substantially higher costs associated with the 2.0 SWR alternative, the net losses to society for this portion of the rulemaking would increase from the range of $55 million to $180 million for the 1.5 SWR alternative to the range of $123 million to $547 million for the 2.0 SWR alternative. Also, the increased net losses for still higher SWRs would be very substantial, *e.g.,* well in excess of a billion dollars for SWR of 3.0. Given the small number of additional benefits, the magnitude of the net losses to society, and given how far outside the range of cost per equivalent life that would ordinarily be considered to be cost-beneficial, we believe our decision not to adopt an SWR higher than 1.5 for these vehicles is reasonable, and we do not accept these petitioners' argument that the agency unwarrantedly elevated cost considerations above safety.

Advocates *et al.* also claimed that NHTSA had previously reached a significantly different result in similar circumstances, citing the agency's 1995 rule amending FMVSS No. 201, *Occupant Protection in Interior Impact,* to require light vehicles to provide protection when an occupant's head strikes upper interior components. They specifically cited the agency's decision to include components in the rear seating area of light trucks and vans (LTVs), despite a great disparity in the costs per equivalent life saved between preventing fatalities in front seat areas and preventing fatalities in rear seat areas, and despite a very high cost per equivalent life saved for the latter areas.

[8] FRIA at p. 120.

As indicated earlier, we decline to define or otherwise adopt any specific numerical test related to costs and benefits as determinative as to whether costs are reasonable or not. We instead consider all relevant factors in any particular rulemaking, and do not consider this factor in isolation. Moreover, NHTSA rulemakings where either the overall rulemaking or a signification portion of the rulemaking is borderline with respect to whether the benefits exceed the costs or where there may appear to be net disbenefits are rare. For these reasons, and in light of the unique nature of the issues involved in such rulemakings, we do not consider the specific decisions we reach in one of these rulemakings to be directly comparable to other rulemakings. We note that while the overall FMVSS No. 201 rulemaking was highly cost-beneficial, the overall FMVSS No. 216 rulemaking is not.[9] We also note that the agency decided in the former rulemaking that coverage of the rear seat areas was particularly necessary because children are disproportionately likely to be seated in the rear, instead of the front, seating area and would be subject to head injuries unless the rear seating areas were included.

3. Petitioners' Argument Concerning Equity

Advocates *et al.* made arguments related to equity. They claimed that it is inequitable to those who travel in large vans and large sport utility vehicles (SUVs) for those vehicles to be subject to a lower standard for roof crush resistance safety. They noted that the agency proposed an SWR of 2.5 for all light vehicles, and the petitioners claimed that the agency "reneged on the need to provide equal safety for all light motor vehicle occupants in the final rule." CfIR argued that drivers and passengers of light trucks, SUVs and vans to 4,536 kilograms (10,000 pounds) GVWR deserve the same rollover protection as occupants of 2,722 kilograms (6,000 pounds) GVWR vehicles. It stated that trucks, SUVs and vans which accommodate four to 15 passengers are primarily used by commercial operators, schools, social groups, and non-profit entities.

In responding to these arguments, we note that we explained in the final rule preamble that while we recognized the argument that all light vehicles should meet the same SWR requirements, to ensure the same minimum level of

[9] Adjusted to 2007 economics, the cost per equivalent life saved for the overall FMVSS No. 201 rulemaking was $1.1 million to $1.3 million.

protection in a rollover crash, we believed in selecting particular requirements for a final rule that our focus needed to be on saving lives while also considering costs and relative risk. We stated that what is necessary to meet the need for safety and is practicable for one type or size of vehicle may not be necessary or reasonable, practicable and appropriate for another type or size of vehicle.

We explained further that, to the extent the goal of establishing the same SWR requirements for all light vehicles would have the effect of either unnecessarily reducing the number of lives saved in lighter vehicles or imposing substantially higher, unreasonable costs on heavier vehicles despite their lesser relative risk, we believed it was appropriate to adopt different requirements for different vehicles.

NHTSA considers all relevant factors, including, where appropriate, special concerns. As noted above, in a FMVSS No. 201 rulemaking, the agency decided that it was particularly necessary to protect children, who are often seated in the rear and who would be susceptible to head injuries unless the rear seating areas were included.

The agency has never, however, adopted a position that identical safety requirements should apply to all light vehicles or at all seating positions regardless of considerations such as relative risks and costs. The Vehicle Safety Act requires us to issue standards that meet the need for motor vehicle safety. For any given aspect of vehicle safety performance, the need for motor vehicle safety, which is defined in the Act in terms of unreasonable risk, varies by type and size/weight of vehicle, as well as by other factors. Given those differences in risk, the type and level of regulation that is reasonable, practicable and appropriate for one vehicle type may differ from that for another vehicle type. Moreover, we believe that adopting an inflexible position of identical requirements regardless of the particular circumstances would be contrary to public safety. Such a position, in combination with the fact that often some light vehicles have greater compliance difficulties than other light vehicles and thus might not be able to achieve as high a level of performance as those other vehicles, could force the adoption of lower, less protective requirements for all light vehicles.

Given these considerations, we do not accept the petitioners' arguments concerning equity.

4. Consequences of Lower Roof Crush Protection for Heavier Light Vehicles and Documentation From NTSB

Advocates *et al.* argued that the consequences of what they term inadequate roof crush protection for large light truck and van occupants are more severe than for light passenger vehicles. They also argued that NTSB comments, investigations, and recommendations document the serious occupant risks of death and injury in large van rollover crashes.

The petitioners stated that the greater weight of the heavier vehicle places higher loads on the roof and roof supports during a rollover. They also stated that certain heavier passenger vehicles will be even more inadequately protected from intrusive roof crush in rollover crashes than lighter passenger vehicles because they have long roofs and multi-row seating, especially 8-occupant large SUVs, and 12- and 15-passenger vans. They stated that the specified test requirements do not test the crush resistance of C-, D- and E-pillars of heavier, longer passenger vehicles.

Advocates *et al.* also noted that NHTSA has published repeated advisories and research analyses warning of the very high rollover propensity of 15-passenger vans. They stated in its latest research note, titled *Fatalities to Occupants of 15-Passenger Vans, 2003–2007,*[10] NHTSA stressed that "15-passenger vans with 10 or more occupants had a rollover rate in single vehicle crashes that is nearly three times the rate of those that had fewer than five occupants." They also noted that the research report indicated that, in 2007, fatalities of occupants of 15-passenger vans increased nearly 20 percent from the previous year, as well as other data from that report.

The petitioners stated that NTSB also emphasized the need for much stronger roofs in heavy passenger vans both in its accident reports and in its comments filed with NHTSA rulemaking dockets on passenger vehicle roof crush resistance. Advocates *et al.* stated that in commenting on NHTSA's NPRM to amend FMVSS No. 216, NTSB pointed out that heavier vehicles such as 12- and 15-passenger vans, not subjected to the roof strength standard, were experiencing patterns of roof intrusion greater than vehicles already subject to the requirements and cited two investigations it conducted concerning the safety need for vehicles between 2,722 and 4,536 kilograms (6,000 and 10,000 pounds) GVWR to meet roof crush resistance requirements. These petitioners included a discussion of these investigations, and asserted that NHTSA's roof crush final rule does not fulfill NTSB recommendations for vans and heavier vehicles.

In reaching its decision on the roof crush final rule, NHTSA carefully considered the consequences of alternative SWR requirements for the heavier light vehicles. As discussed above, as part of this, the agency conducted a detailed analysis of the benefits and costs at alternative SWR levels, which is presented in detail in the agency's FRIA. Among other things, the agency conducted a detailed analysis of the target population of occupants who would be likely to benefit from a stronger roof due to an upgrade of FMVSS No. 216, and how they would benefit from stronger roofs meeting alternative SWR level requirements.

While we adopted, for reasons discussed in the final rule preamble (and also discussed above), a lower SWR level for the heavier light vehicles than for ones with a GVWR of 2,722 kilograms (6,000 pounds) or less, the 1.5 SWR requirement we adopted is more stringent than the longstanding requirement that has applied to lighter vehicles until this rulemaking. The standard now requires a two-sided test. We also note that since the amount of force that a vehicle's roof must withstand in the specified test is a multiple of the vehicle's unloaded weight, *e.g.,* 1.5 times the unloaded weight of the vehicle, the amount of force that is applied to a vehicle's roof is higher for heavier vehicles than lighter vehicles at any constant SWR.

Advocates *et al.* raised specific issues concerning the safety of larger passenger vans. We note that, as discussed in the May 2009 research note[11] they cited, and in documents referenced by that note, NHTSA developed a specific action plan for 15-passenger van safety. In September 2003, the agency published the *NHTSA Action Plan for 15-Passenger Van Safety.* It described a number of research programs, consumer information activities and potential regulatory actions with which NHTSA intended to address the safety of 15-passenger van users. The plan was updated in November 2004 and the most recent update to the plan was

[10] *Fatalities to Occupants of 15-Passenger Vans, 2003–2007,* Traffic Safety Facts: Research Note, DOT HS 811 143, National Highway Traffic Safety Administration, May 2009, at page 5.

[11] The research note available on NHTSA's Web site at *http://www-nrd.nhtsa.dot.gov/Pubs/811143.PDF.*

prepared in April 2008.[12] The action plan is discussed at pp. 4 to 5 of the referenced May 2009 research note.[13]

Occupant protection for 12- and 15-passenger van continues to be an agency priority and, as a result of the agency's rulemaking to upgrade FMVSS No. 216, these vehicles will for the first time be required to comply with FMVSS No. 216. The May 2009 research note indicated that fatalities, both total and in vans that rolled over, have been on a declining trend since 2001. As noted by the petitioner, there was an increase in 2007; however, we expect that the safety benefits that will occur as a result of new regulatory requirements adopted in connection with the agency's action plan for 15-passenger van safety and its comprehensive plan to address the serious problem of rollover crashes will increase over time as the new requirements are phased in and as an increasing percentage of the on-road fleet meet these requirements.

As part of our rulemaking to upgrade FMVSS No. 216, we considered the comments and recommendation of the NTSB. In the final rule, we indicated that the rule would address the NTSB's recommendation H–03–16, to include 12- and 15-passenger vans in FMVSS No. 216, to minimize the extent to which survivable space is compromised in the event of a rollover accident. We plan to consult further with NTSB about its recommendation. We note that the petitioners have not provided any information that would lead us to change our view that the rule addresses that NTSB recommendation.

In its petition, CFiR also requested the agency to adopt a higher SWR for the heavier light vehicles with passenger seating positions of three or more. CfIR stated that these vehicles are often less stable, occupants are more vulnerable, and the vehicles are used more frequently in off-road transportation. As part of analyzing the target population of occupants who would be likely to benefit from a stronger roof due to an upgrade of FMVSS No. 216, the agency has already accounted for issues related to the stability of these vehicles and vulnerability of their occupants. Historically, vehicles with a GVWR between 2,723 and 4,536 kilograms (6,001 and 10,000 pounds) comprise approximately 20 percent of the fleet with over 90 percent of these heavy vehicles allowing for three or more seating positions.[14] As to the issue of more frequent off-road use, we note that the relevant agency sources would not collect data for crashes that happen during off-road transportation such as at work sites. However, CfIR has not provided any supporting information relating to its claim that the vehicles are used more frequently in off-road transportation, or that there are any significant number of rollover crashes that would meaningfully affect the target population used by the agency for its analysis of benefits and costs. We therefore do not accept this argument.

5. Agency's Cost-Benefit Analysis

Advocates *et al.* argued that NHTSA's cost-benefit analysis underestimates the number of lives that could be saved by much stronger roofs. They cited benefits estimates submitted by the Insurance Institute for Highway Safety (IIHS) in a March 2008 comment and in a subsequent publication. These petitioners stated that in that publication IIHS claimed that NHTSA underestimated roof strength improvement benefits due to the agency's mistaken belief that there will be no benefits for unbelted occupants or those occupants who risk ejection. They also said that IIHS provided much higher estimates of benefits than NHTSA.

Advocates *et al.* claimed that the agency failed to discuss or respond to the initial IIHS benefits estimate in the final rule. They claimed that while the agency engaged in "a highly detailed, extensive evaluation in the FRIA of the strengths and weaknesses of the study attached by IIHS to its docket comments," the agency failed in this supporting document to evaluate the benefits claims proffered by IIHS. The petitioners stated that the central point of the IIHS submission to the supplemental notice of proposed rulemaking (SNPRM) docket was to emphasize that the agency had dramatically underestimated the benefits of adopting a stronger fleet-wide FMVSS No. 216. Advocates *et al.* claimed that NHTSA ignored the merits of the IIHS benefits analysis "notwithstanding the internal debate set forth in the FRIA over some aspects of the methodology and data selected by IIHS in conducting its study."

NHTSA does not accept the claim of these petitioners that the agency ignored the merits of the IIHS benefits analysis. We begin by emphasizing that NHTSA's decision is based in significant part on the agency's Final Regulatory Impact Analysis. In section VII of the preamble to the final rule, titled Costs and Benefits, we explained that "(t)he agency addresses the comments concerning its analysis of costs and benefits in detail in the FRIA." 74 FR 22377. We also noted that, in the final rule preamble, we summarized the agency's estimates of costs and benefits and discussed the comments concerning target population and roof crush as a cause of injury.

In the FRIA, the agency provided a detailed 5-page discussion of the various IIHS studies, including both their methodology and conclusions (*see* pages 47–51). This discussion addressed the IIHS submissions from March 2008, May 2008, and February 2009, representing the most recent IIHS research submitted prior to publication of the final rule in May 2009. This same discussion also addressed comments by JP Research, which submitted its own evaluation of the IIHS study, and argued that there were significant flaws in its methodology.

NHTSA's discussion in the FRIA showed the limitations of the IIHS methodology and showed that its conclusions regarding ejections and belt use are not supported by the data. This discussion was not, as Advocates *et al.* suggest, an "internal debate" but an evaluation of the merits of the IIHS study and its findings. The FRIA also described the agency's own study, which applied previously peer-reviewed methods specifically to ejections and unbelted occupants, and which contradicted the IIHS studies. Given these considerations, the agency did not accept the benefit estimates provided by IIHS. The relevant issues concerning estimated benefits are addressed in much greater detail in Chapter IV of the FRIA.

Advocates *et al.* did not address any of the detailed criticisms of the IIHS analyses discussed by NHTSA in the FRIA, but simply claimed in its petition that the agency had ignored the merits of the IIHS study. Given the above discussion, we do not accept that claim.

Advocates also criticized the agency's adjustment of future target populations to reflect the required installation of electronic stability control (ESC) in all passenger vehicles. Advocates stated that the agency has only projected safety benefits as the fleet gradually is

[12] This update is available on NHTSA's Web site at: *http://www.nhtsa.dot.gov/cars/problems/studies/15PassVans/VAP_rev1_2008.pdf.*

[13] We note that there is some overlap between the actions in the agency's action plan for 15-passenger van safety and its comprehensive plan for addressing the serious problem of rollover crashes, discussed earlier in this document.

[14] According to the 2007 model year Polk Automotive vehicle registration data, standard cab pickup trucks with one row of seating and at least two designated seating positions account for approximately 10 percent of all vehicles registered with a GVWR between 2,723 and 4,536 kilograms (6,001 and 10,000 pounds). Extended cab pickup trucks, vans and sport utility vehicles that have the capacity to seat three or more occupants account for the remaining registrations in this vehicle weight class.

equipped with ESC, including large vans, but no actual crash data specifically verifying that rollovers have been reduced in large vans as a direct result of ESC.

The analysis presented by NHTSA in the FRIA reflects a projection of annual impacts that will occur when the entire vehicle fleet has been designed to include both ESC and stronger roofs, not the impacts to today's on-road fleet. In numerous studies as well as in vehicle tests, ESC has been shown to significantly reduce rollover crashes in passenger vehicles. During the course of the ESC rulemaking, when projecting the costs and benefits of ESC, NHTSA used effectiveness estimates based on sound, peer reviewed statistical studies to project the benefits of ESC in all passenger vehicles, including large vans. We note that in comments concerning the PRIA for ESC, Advocates acknowledged that the installation of ESC would impact the FMVSS No. 216 rulemaking by reducing the number of rollovers.

ESC will be standard equipment on all passenger vehicles before the new roof crush requirements become effective. This means that future vehicle fleets containing the stronger roofs required by FMVSS No. 216 will experience fewer rollover crashes than are experienced by the current on-road fleet. It would be inappropriate to compare the costs of improving roof strength to benefits derived from current fatality and injury levels without first adjusting for the significant impact that ESC will have on the crash experience of future vehicle fleets with enhanced roof strength.

Advocates *et al.* also claimed that ESC may not be effective in large vans. At the time NHTSA did its statistical analysis of this issue, there were too few vans on the road with ESC to analyze them separately from other vehicles. However, NHTSA has tested ESC on large vans and found that it is effective in improving stability in potential rollover scenarios. This study [15] found that "* * * installation of ESC on 15-passenger vans may have important safety benefits in some, but not necessarily all, on-road driving situations." This is reasonably consistent with ESC applicability in other vehicles where it is highly effective in many circumstances, but cannot prevent rollover in all situations.

Moreover, large vans make up a very small portion of the target population. NHTSA examined the sample cases included in its target population and did not find any cases involving large vans that met the criteria for inclusion. This does not imply that there would never be such cases, but it does indicate that they are a relatively rare occurrence.

One possible reason, aside from the relative rarity of these vehicles in the fleet, is that roof crush typically is only an issue in vehicles that roll more than one quarter turn. The general shape of large vans, with more extensive areas of sheet metal on each side, makes it less likely that they would roll more than one quarter turn. In NHTSA's Crashworthiness Data System (CDS) from 2004–2008, the portion of crash-involved passenger cars that rolled over was roughly equal to the portion of crash-involved vans that rolled over, but, passenger cars were twice as likely as vans to roll more than one quarter turn and thus expose their occupants to potential roof intrusion.

Given the above considerations, we decline to reconsider the target population related to ESC considerations.

B. Request That Agency Adopt a Dynamic Testing Provision

1. May 2009 Preamble Discussion

As discussed in the preamble to our May 2009 final rule, we developed our proposal to upgrade roof crush resistance requirements after considerable analysis and research, including conducting a research program to examine potential test procedures that might be adopted to improve the roof crush resistance requirements. The agency testing program included full vehicle dynamic rollover testing, inverted vehicle drop testing, and comparing inverted drop testing to a modified FMVSS No. 216 test. After considering the results of the testing and other available information, the agency concluded that the quasi-static procedure generates results that suitably represent the real-world dynamic loading damage patterns, and is the most appropriate one on which to focus our upgrade efforts.

We did not propose a dynamic test procedure in either the NPRM or the SNPRM. We did discuss in the NPRM a number of types of dynamic tests and why we were not including them in the proposal. With respect to the JRS test, we noted that although the agency was open to further investigating that test, we had no data regarding the repeatability of dummy injury and roof intrusion measurements, and would also need further information on its performance measures, practicability, and relevance to real-world injuries. We stated that, in summary, we were not proposing a dynamic test procedure and that we believed the current quasi-static test procedure is repeatable and capable of simulating real-world deformation patterns. We also stated that we were unaware of any dynamic test procedures that provide a sufficiently repeatable test environment.

Consumer advocacy organizations and a number of other commenters argued that it is not enough to upgrade the current quasi-static requirement, and that a dynamic test requirement is needed. While specific recommendations varied, one was for the agency to adopt an upgraded quasi-static requirement now, and to proceed with further rulemaking at this time for a dynamic test.

After reviewing the comments, we declined to pursue a dynamic test as part of that rulemaking, or to initiate a separate rulemaking for a dynamic test. We included an analysis of the comments recommending a dynamic test in an appendix.

We stated in the preamble that we were still not aware of any dynamic test procedure that provides a sufficiently repeatable test environment. We stated further that while some commenters argued that certain procedures are repeatable, the agency was not persuaded by the arguments and data they presented. We also noted that, for reasons discussed in the appendix, there are significant issues associated with each of the cited dynamic test procedures related to possible use in a Federal motor vehicle safety standard.

We explained further that, also of importance for this rulemaking, even if NHTSA were to identify a particular dynamic test procedure, among the many known to be available, as likely to be suitable for assessing roof crush resistance (something we have not been able to do thus far), we would need additional years of research to evaluate and refine, as necessary, the procedure in order to develop a proposal, including evaluating it in the context of the current vehicle fleet. We stated that it has not yet been determined whether any dynamic test requirement that might be identified by NHTSA's research would produce significant additional benefits beyond those that will be produced by the substantial upgrade of the quasi-static procedure that we adopted in that rule.

NHTSA stated that it agreed, however, with pursuing a dynamic test as our ultimate goal. We stated that we would like to have one for rollover crashes just as we do for front and side crashes. We

[15] Forkenbrock, G.J., and Garrott, W.R., "Testing the Rollover Resistance of Two 15-Passenger Vans with Multiple Load Configurations," National Highway Traffic Safety Administration, Washington, DC, June 2004, DOT HS 809 704.

stated that we could not adopt or even propose one now because of issues related to test repeatability, a dummy, and lack of injury criteria. We explained that we are pursuing further research for a dynamic test. In the meantime, we did not want to delay a significant upgrade of FMVSS No. 216 that will save 135 lives each year.

2. Overall Rationale for Request

As discussed above, CfIR asked us to reconsider our decision not to adopt a dynamic test. It cited two basic reasons for the agency to reconsider this issue.

First, CfIR argued that the quasi-static test and criteria do not reasonably differentiate between the injury risk of compliant and non-compliant vehicles. Second, the petitioner argued that, contrary to NHTSA's assertions, the Jordan Rollover System (JRS) dynamic test has been available for two years and extensive data submissions show it to be reliable, repeatable, validated to real world rollover injury risk and accurate in assessing comparative injury potential performance.

In its petition, CfIR cited numerous submissions it had made to the docket. This petitioner requested that the agency review the data previously submitted and summarized in its petition and consider the following actions related to a dynamic test: Adjust the rule to allow for an alternate dynamic compliance test, propose and allow for an alternative dynamic test for NCAP ratings, allow for non-compliance or compliance exceptions based on submitted dynamic test evidence, and correct statements made by the agency regarding the JRS' repeatability and reliability in testing a vehicle's dynamic performance that the petitioner considers to be misleading and inaccurate.

3. Introduction to Response

In responding to CfIR, we begin by noting that we do not consider a request to add a dynamic test requirement, including as an alternative test, to be a petition for reconsideration of the final rule. As we did not propose regulatory text to add a dynamic test procedure in either the NPRM or the SNPRM and did not invite comment on the possibility of including such a procedure in the final rule, adding a dynamic test procedure was not within the scope of this rulemaking. Our discussion in the preamble of the NPRM explaining why we were not including a dynamic test in the proposal did not put such a test within the scope of notice. We will nonetheless discuss the issues raised by CfIR as part of explaining our position in these areas.

We also note that CfIR requested that we propose and allow for an alternative dynamic test for NCAP ratings. In the preamble to the final rule, we addressed comments concerning NCAP by explaining that the purpose of this rulemaking is to upgrade our roof strength standard. We said that the issue of whether roof strength might be addressed in some way in our NCAP program would be considered separately in the context of that program. Moreover, the possibility of addressing roof strength in our NCAP program is not a rulemaking issue. Therefore, we are not addressing issues concerning NCAP in this document.

In addition, we note that CfIR has asked the agency to make a variety of conclusions relating to the use of the JRS in research and concerning how it compares to certain respects to various dynamic tests included in the agency's standards. *See* p. 4 of CfIR's supplement to its petition for reconsideration.

We are not providing such conclusions. NHTSA provided an analysis of comments concerning dynamic testing, including a discussion of several specific tests, for the limited purpose of explaining its decision whether to pursue a dynamic test as part of the current rulemaking (which would have meant issuing either a new NPRM or an SNPRM) or to initiate at this time a separate rulemaking for a dynamic test. We were not providing a comprehensive analysis of any of these various tests, and we do not take any position concerning the use of these tests in research.

4. Petitioner's Claim That Quasi-Static Test and Criteria Do Not Reasonably Differentiate Between the Injury Risk of Compliant and Non-Compliant Vehicles

CfIR claimed that the quasi-static test and criteria do not reasonably differentiate between the injury risk of compliant and non-compliant vehicles. It argued that some compliant vehicles have substantially greater injury risk than some non-compliant vehicles and vice-versa, as shown by IIHS real world rollover statistics and JRS dynamic test data.

The petitioner stated further that the agency's final rule, as compared to the earlier version of FMVSS No. 216, has as its basis a slightly modified test and significantly increased criteria for compliance with only a statistically inferred cumulative damage effect on injury potential. CfIR stated that its concern is that impact injuries are dynamic non-cumulative events and are a composite function of a vehicle's roll and pitch orientation, structural strength, geometry, elasticity and stiffness as well as occupant kinematics, interaction and effectiveness of protection features. It stated that only dynamic testing can accurately consider these variables and rate vehicles accordingly.

We do not accept CfIR's argument that the quasi-static test does not reasonably differentiate between the injury risk of compliant and non-compliant vehicles. NHTSA addressed the relationship between the FMVSS No. 216 quasi-static test procedure, alternative SWR levels, and injury risk throughout the rulemaking to upgrade the standard. We note that two studies [16] the agency conducted in support of the final rule have shown significant correlations between vertical roof intrusion and occupant injury from head contact. These studies significantly relate static test performance of a vehicle's roof to real world occupant safety.

In our SNPRM, when the second peer-reviewed study was released, the agency explained (73 FR 5490):

> More recently, the agency has estimated benefits based on the relationship between intrusion and the probability of injury. This relationship was not established when the NPRM was published, but with the additional years of data available, a statistically significant relationship between intrusion and injury for belted occupants has since been established. A study regarding this relationship has undergone peer review and is available in the docket. This broader relationship, together with other factors, including the higher failure rates resulting from adjustments for maximum vehicle weight and the higher effective SWRs that result from this same issue will likely lead to slightly higher benefits than was estimated in the NPRM.

The agency included in the FRIA a detailed discussion of how it analyzed benefits.

While CfIR has submitted numerous JRS test results and some analysis concerning those results and FMVSS No. 216 performance, it has not presented a comprehensive evaluation of real world occupant safety and JRS performance measures. We have concluded that further research would be needed to establish a correlation between performance on the JRS and real world occupant safety.

The agency recognizes that a dynamic test, if coupled with suitable injury criteria and dummy, has the potential to

[16] NHTSA Docket No. NHTSA–2008–0016: Strashny, Alexander, "The Role of Vertical Roof Intrusion and Post-Crash Headroom in Predicting Roof Contact Injuries to the Head, Neck, or Face during FMVSS 216 Rollovers," and NHTSA Docket No. NHTSA–2005–22143: Austin, Rory, *et al.,* "The Role of Post-Crash Headroom in Predicting Roof Contact Injuries to the Head, Neck, or Face During FMVSS No. 216 Rollovers."

assess some aspects of injury risk to occupants in rollover crashes that are not addressed by the current quasi-static test. Some of these risks are addressed by other parts of our comprehensive plan for reducing the serious risk of rollover crashes and the risk of death and serious injury in those crashes, including our rulemaking for ejection mitigation. Moreover, as discussed in the final rule preamble, we are pursuing further research for a dynamic test. However, the potential benefits that might result from a future rulemaking for a dynamic test requirement do not provide an appropriate reason to delay the significant upgrade of FMVSS No. 216 set forth in the May 2009 final rule that is estimated to save 135 lives each year.

As discussed above, CfIR requested that we adjust the rule to allow for an alternate dynamic compliance test or allow for non-compliance or compliance exceptions based on submitted dynamic test evidence.

We decline to permit such an alternative. Although we are pursuing further research on dynamic tests, we have not identified the JRS test as being suitable for inclusion in FMVSS No. 216.

5. Petitioner's Claim That JRS Test Device Has Been Available for Two Years and Extensive Test Data Submissions Show It To Be Reliable, Repeatable, Validated to Real World Injury Risk and Accurate in Assessing Comparative Injury Potential Performance

In its petition, CfIR claimed that, contrary to NHTSA assertions, the JRS dynamic test device has been available for two years and extensive test data submissions show it to be reliable, repeatable, validated to real world rollover injury risk and accurate in assessing comparative injury potential performance.

NHTSA considered all comments submitted in response to a Request for Comments (RFC) notice published in 2001, the NPRM, and the SNPRM prior to developing the final rule. However, we continue to believe that there are significant issues that require further research, including ones related to correlation of JRS performance measures with real world occupant safety and repeatability, as to whether the JRS device would be suitable to use for purposes of a test requirement in a Federal motor vehicle safety standard.

In discussing the issue of a dynamic rollover test, we believe it is important to distinguish between the various types of dynamic tests that might be developed and their purposes. As we discussed in the final rule preamble, rollover crashes are complex and chaotic events. Rollovers can range from a single quarter turn to eight or more quarter turns, with the duration of the rollover crash lasting from one to several seconds. The wide range of rollover conditions occurs because these crashes largely occur off road where the vehicle motion is highly influenced by roadside conditions.

The variety and complexity of real-world rollover crashes create significant challenges in developing dynamic tests suitable for a Federal motor vehicle safety standard. Rollover crash tests presented to and/or conducted by the agency have indicated a great degree of variability in vehicle and occupant kinematics.

In assessing whether a potential dynamic test would be appropriate for a Federal motor vehicle safety standard, the agency must consider such issues as (1) Whether the test is representative of real-world crashes with respect to what happens to the vehicle and any specified test dummies; (2) for the specific aspect of performance at issue, whether the test is sufficiently representative of enough relevant real-world crashes to drive appropriate countermeasures and, if not, the number and nature of necessary tests to achieve that purpose; (3) whether the test is repeatable and reproducible so that the standard will be objective and practicable; and (4) whether the test dummies to be specified are biofidelic for the purposes used.

In considering the possibility of a dynamic rollover test in the context of this particular FMVSS No. 216 rulemaking, we primarily focused on whether a particular test would appropriately assess roof crush resistance. As we explained in the NPRM and in subsequent documents, the record showed that the quasi-static procedure provides a suitable representation of the real-world dynamic loading damage patterns, and an appropriate procedure to use in upgrading the standard.

It is possible that an alternative dynamic test could be used to assess roof crush resistance in a manner similar to that of the current quasi-static test. For example, measurements of headroom might be taken before and after a dynamic crash test, and it also might be possible to measure available headroom during a crash test. CfIR cited what it referred to as post crash negative headroom.[17]

The potential benefits of a dynamic rollover test could be much larger if the test provided direct measurements of injury risks in a crash test that is representative of real-world crashes and there were a dummy suitable for that purpose. The agency's dynamic front and side impact test requirements were developed based upon crash types and injury outcomes in the field using anthropomorphic test dummies that were developed for specific crash tests.

In addressing the issue of repeatability in its petition, CfIR cites data which it argues show that the procedure tests vehicles in a repeatable and reliable way, with acceptable variances, to the inputs supplied by the person conducting the test. It cites variances for road speed, contact pitch angle and contact roll angle. The data it presented suggest that it is able to control these test parameters with minimal variation.

However, while it is necessary for these kinds of control parameters to be repeatable, that is only one aspect of evaluating repeatability and reproducibility. Repeatability must be evaluated using outcome or performance measures. This would include whatever performance criteria were to be included in a standard.

Moreover, if the agency were to identify the JRS test (among the many potential alternative dynamic tests) as likely to be suitable to include in FMVSS No. 216, we would need additional research to evaluate and refine, as necessary, the procedure to develop a proposal, including evaluating it in the context of the current vehicle fleet. The agency would need, for example, to evaluate the appropriate levels for the various inputs, appropriate performance criteria, repeatability, and so forth.

As noted earlier, rollover crash tests can have an undesirable amount of variability in vehicle and occupant kinematics. Moreover, there are many types of rollover crashes, and within each crash type the vehicle speed and other parameters can vary widely. A curb trip can be a very fast event with a relatively high lateral acceleration. Soil and gravel trips have lower lateral accelerations than a curb trip and lower initial roll rates. Fall-over rollovers are the longest duration events. Viano and Parenteau[18] correlated eight different tests to six rollover definitions from NASS–CDS. Their analysis indicated that the types of rollovers occurring in the real-world varied significantly.

[17] CfIR defined post crash negative headroom as being the equivalent of post crash cumulative roof crush.

[18] Viano D, Parenteau C., "Rollover Crash Sensing and Safety Overview," SAE 2004–01–0342.

Occupant kinematics will also vary with these crash types.

Numerous issues would need to be addressed to assess the suitability of using the JRS (or any other dynamic test), in a Federal motor vehicle safety standard as a more comprehensive test providing direct measurements of various injury risks. As previously discussed, these would include, but not be limited to, the following: (1) For which of the various kinds of real-world rollover crashes the test would be representative and in what ways with respect to what happens to the vehicle and any specified test dummies during the test, (2) for each specific aspect of performance at issue, whether the test is sufficiently representative of enough relevant real-world crashes, and also whether there are appropriate performance criteria, to drive appropriate countermeasures, (3) whether the test is repeatable and reproducible with respect to both input and output measures (included any performance criteria) so that the standard will be objective and practicable, (4) whether the test dummies to be specified are biofidelic for the purposes used, (5) the extent to which the test addresses real-world injuries not already addressed by other Federal motor vehicle safety standards so that the test requirement would likely result in significant safety benefits, and (6) how the test compares to other possible dynamic tests, as well as possible non-dynamic tests, for the purpose of achieving these safety benefits.

Our analysis of potential dynamic tests is complicated by the following factors:

- The currently available anthropomorphic test devices (*i.e.,* dummies) were not designed for use in rollover testing and have not been shown to be valid for such use.[19] Frontal impact test dummies and side impact test dummies are not interchangeable and neither is suitable for use in a rollover test. The Hybrid III dummies, for example, were designed for high acceleration impacts and their motion does not resemble human response under multi axis low acceleration loading found in rollover crashes. While CfIR claims to have developed a more appropriate neck, this device has not been documented, had its biomechanical response demonstrated and correlated to human response corridors, or independently evaluated.
- There are no generally accepted performance measures to evaluate dynamic vehicle performance in rollover crashes. CfIR claimed that "NHTSA, IIHS, and consensus biomechanical performance criteria have been established and generally accepted," but have not substantiated that claim or otherwise demonstrated the validity of the performance measures they recommend for measuring injury risk in this context. CfIR has attempted to compare measurements between vehicles and evaluate their performance measures based on their consistency with anecdotal observations regarding rollover safety.[20] However, CfIR has not shown that this is a generally accepted approach for measuring real-world injury risk or otherwise demonstrated its validity.

Given these issues, as well as others discussed in the final rule preamble and appendix, we believe that there are significant issues as to whether the JRS would be suitable to use for purposes of a test requirement to include in a Federal motor vehicle safety standard.

As discussed in the final rule preamble, we would like to have a dynamic performance test for rollover crashes just as we do for front and side crashes. To that end, we are pursuing further research into the feasibility of a comprehensive dynamic test.

We are sponsoring research that will include the following: (1) Assess vehicle, crash, occupant and injury patterns in rollover crashes through epidemiologic investigations; (2) develop priorities and parameter ranges for dynamic rollover research that are derived from analytical, epidemiological, and computational investigations; (3) develop a dynamic test fixture and associated test procedure capable of simulating the dynamic rollover loading environment; (4) perform a baseline evaluation of the sensitivity of the vehicle and occupant response to static and dynamic vehicle parameters; (5) evaluate the biofidelity of currently available anthropometric test devices in terms of their ability to predict injury risk in rollover environments; and (6) evaluate the predictive capabilities of current injury criteria for the most common rollover injuries.

Also, for several years, NHTSA has evaluated the performance of occupant restraint systems in a simulated rollover environment. This test series has evaluated the performance of a variety of restraint systems in limiting occupant motion during a simulated roof to ground impact. NHTSA has recently initiated a research program to conduct full scale rollover tests to evaluate whether the relative performance of advanced restraints shown in laboratory testing can be replicated in a full scale rollover test. NHTSA is conducting a series of full vehicle rollover tests with similarly restrained front and rear seat occupants on the same side of a large SUV. The agency desires to establish a comparable inertial environment between two occupants on the same side of the vehicle to compare restraint performance.

While we hope in the future to be able to consider rulemaking to establish a dynamic rollover test, we believe that significant additional research is needed before that would be possible. We will be conducting and sponsoring our own research and will monitor the research of others, including the petitioner's. However, for the reasons discussed in this document and in the other documents we issued in the context of the rulemaking to upgrade FMVSS No. 216, we are not prepared to initiate rulemaking for a dynamic rollover test at this time.

We note that our views concerning a dynamic test appear to be similar to those of IIHS. In its March 24, 2009 Status Report,[21] IIHS stated, under the heading "A Dynamic Test Would Be Ideal, But Which One?":

> A dynamic test could fill in the missing data. However, the best way to conduct such a test and how to evaluate the results are still under debate.
>
> Real rollover crashes occur in lots of ways, and engineers have come up with different kinds of tests to address various aspects of these crashes — dolly rollovers, curb trips, dirt trips, corkscrews, and fallovers, among others. No single test best represents the broad spectrum of actual crashes.
>
> Measuring how a roof crushes in a dynamic test is trickier than in a static test, and some testing methods would preclude having dummies inside the vehicles. The dummy itself is a problem because none of the existing types was designed to assess injury risk in a rollover crash. Some dummies may not even move like people do when turned upside down.
>
> A further complication is that many rollovers are preceded by other events that may affect occupants' positions when their

[19] *See* Lai, W. III, B. E., Richards, D., Carhart, M. Newberry, W., and Corrigan, C.F., "Evaluation of human surrogate models for rollover," SAE 2005–01–0941; Yamaguchi, G.T., Carhart, M. R., Larson R., Richards, D., Pierce, J., Raasch, C.C., Scher, I., and Corrigan, C.F., "Electromyographic activity and posturing of the human neck during rollover tests," SAE–2005–01–0302.

[20] *See,* for example, Transcript of proceedings during the question and answers session, J. G. Paver, D. Friedman, F. Carlin, J. Bish, and J. Caplinger, "Development of Rollover Injury Assessment Instrumentation and Criteria," Injury Biomechanics Research, Proceedings of the Thirty-Sixth International Workshop, 2008.

[21] *http://www.iihs.org/externaldata/srdata/docs/sr4403.pdf.*

vehicles roll. This means researchers will have to figure out the best position for a dummy in a dynamic test.

In the end, specifying a dynamic test is a big task that's only just started. In the meantime, Institute research shows that making roofs stronger as measured in a relatively simple test will prevent many injuries and deaths in rollover crashes.

C. Other Issues

In this section, we address several additional issues raised by CfIR.

Benefits Estimates

In its petition, CfIR presented benefits estimates based on JRS test results and also based on IIHS estimates of benefits. The petitioner claimed, with respect to affected population and benefits, that "(c)ontrary to submitted JRS evidence of the benefits of reduced roof crush in preserving side windows and avoiding ejection portals, the agency predicts only 667 lives saved." We note that the 667 figure is the target population of occupants who might benefit from improved roof strength rather than the number of lives saved. CfIR claimed that the agency justified its prediction "by characterizing the effect of their own statistical injury potential data and ignoring the comparable IIHS ejection, and a general 50% reduction of incapacitating injury benefit to restrained, unrestrained and ejected occupants."

The issue raised by CfIR about the IIHS estimates of benefits is essentially the same as the one raised by Advocates *et al.* As discussed earlier in this document, our decision not to accept the IIHS estimates of benefits was based on a detailed analysis of the IIHS studies and methodology presented in the FRIA. CfIR *et al.* did not address any of the detailed criticisms of the IIHS analyses discussed by NHTSA in the FRIA, but simply claimed in its petition that the agency had ignored the IIHS estimates. Given the above discussion, including that presented in the context of the claim made by Advocates *et al.* we do not accept CfIR's claim. We also do not accept estimates of benefits presented by CfIR that rely on the IIHS estimates of benefits that we did not accept.

CfIR Supplement to Petition

As noted earlier, in September 2009, CfIR submitted a document it called a "supplement" to its petition for reconsideration. It attached a document discussing JRS test results which it said indicate that an SWR of 4.1 is required to minimize roof crush injury potential. CfIR stated it requested reconsideration of JRS dynamic testing for the final rule for two reasons: (1) IIHS's SWR of 4 or greater has gained industry acceptance and timely voluntary compliance, and (2) the JRS test fixture accurately measures post crash negative headroom and can assess the injury potential of occupant protection systems. It stated that its supplement requests further (1) raising the static test criteria to the dynamically derived SWR criteria of 4, and (2) initiating a dynamic rollover crashworthiness NCAP program using the JRS fixture.

We note that we may, in responding to a petition for reconsideration, consider supplementary information provided in support of a request included in that petition. We observe that raising the static SWR criterion to 4 is a new request that is not within the scope of CfIR's petition.

Moreover, the fact that IIHS has selected a SWR of 4, in a one-sided test, in order for a vehicle to be rated as "good" does not provide a reason for us to conduct rulemaking for a higher SWR. We explained the basis for our decisions concerning SWR in the May 2009 final rule preamble, and CfIR has not provided any reasons for us to conduct further rulemaking on that issue.

Paper Titled "Scientific Review and Evaluation of the Jordan Rollover System (JRS) Impact Crash Test Device"

CfIR submitted a paper titled "Scientific Review and Evaluation of the Jordan Rollover System (JRS) Impact Crash Test Device." [22] While we reviewed that paper, we believe that it does not provide sufficient new information to lead us to change our position that there are significant issues as to whether the JRS would be suitable to use for purposes of a test requirement to include in a Federal motor vehicle safety standard.

Alleged Errors

In an appendix to its petition for reconsideration, CfIR identified what it characterized as "notable errors" regarding the JRS in the body of the May 2009 final rule preamble and in Appendix A of that document. We have discussed earlier in this document a number of the issues raised by CfIR in this appendix, and are providing additional discussion about several issues raised by CfIR in that appendix below. Beyond the issues discussed earlier in this document and the additional discussion below, we believe that much of the information CfIR provides in its appendix simply represent comment about our statements. We believe there is no need to discuss each of these detailed comments, as they do not provide information that would lead us to change our position that there are significant issues as to whether the JRS would be suitable to use for purposes of a test requirement to include in a Federal motor vehicle safety standard.

Discussion on roof racks. CfIR claimed that NHTSA observed that the roof racks the agency looked at had no appreciable effect on SWR, but ignored its submissions on the substantial Nissan Xterra (and Land Rover Discovery) tubular racks and the panel-mounted Jeep Grand Cherokee racks which it asserted focused loading and created deep intruding buckles. As discussed in the final rule preamble, the existing FMVSS No. 216 test procedure specified removal of roof racks prior to platen positioning or load application. We did not propose to change that specification and, after considering a comment submitted by Xprts, did not change it in the final rule. *See* 49 FR 22371.

We reviewed the JRS test submissions, and it continues to be our view that there has not been any demonstration that roof racks contribute substantially to roof crush so as to warrant changing the current specification. We note that we reviewed the materials provided by CfIR and, based on what was presented, could not draw a conclusion whether the roof rack degraded the performance of the roof in the test. Moreover, given the issues discussed earlier in this document, it is not clear what significance JRS test results such as these would have in showing how significant a potential problem might be in the real world.

As we discussed in the final preamble, the agency reviewed NASS–CDS and could not find any relationship that roof racks cause catastrophic deformation of the roof in a rollover. The agency stated:

* * * We reviewed several NASS–CDS cases [23] of utility vehicles with roof racks that had undergone rollover crashes. Our review did not support the contention that the presence of a roof rack initiated buckling of the roof and increased the risk of occupant injury. There was also no general trend concerning injury severity and presence of a roof rack in the reviewed cases.

[22] See NHTSA–2009–0093: Scientific Review & Evaluation of the Jordan Rollover System (JRS) Impact Crash Test Device.

[23] Photographs collected from NASS–CDS Case Query Page. NASS–CDS cases examined: 100121, 102005185, 146004985, 161005827, 656500082, 471300143, and 129005218.

We further reviewed our fatal hardcopy case files [24] and could not identify a single case where the roof rack appeared to aggravate the deformation of the roof structure. 74 FR 22372.

Discussion about repeatability of test dummy and initial restraint positioning. We included a discussion in Appendix A of the final rule stating that because the JRS is spinning prior to initiating the vehicle test, there are concerns about how to establish the initial belt position on the test dummy in a manner that is consistent with real world conditions. We stated that the lateral acceleration prior to rollover initiation can cause a belted occupant to introduce slack in the belt. We stated that there is also the additional complication of the timing for firing the rollover curtains and/or pretensioners in the JRS pre-spin cycle.

CfIR stated that this is a reference to the CRIS test and is not appropriate to the JRS. However, we believe the language cited by CfIR as incorrect is ambiguous as the vehicle spins in the JRS just prior to impact with the roadway surface, where the CRIS has the vehicle spinning at full velocity prior to impact with the ground. Therefore, both the JRS and CRIS have the vehicle in a pre-spin prior to impact with the road surface.

D. Conclusion

For the reasons discussed above, we deny the petitions for reconsideration submitted by Advocates *et al.* and CfIR.

Authority: 49 U.S.C. 322, 30111, 30115, 30166 and 30177; delegation of authority at 49 CFR 1.50.

Issued: April 2, 2010.

Stephen R. Kratzke,

Associate Administrator for Rulemaking.

[FR Doc. 2010–7908 Filed 4–6–10; 8:45 am]

BILLING CODE 4910–59–P

[24] *See* Docket Number NHTSA 2005–22143–56: Roof Crush Analysis Using 1997–2001 NASS Case Review.

DEPARTMENT OF COMMERCE

National Oceanic and Atmospheric Administration

50 CFR Part 648

[Docket No. 0909101271–91272–01]

RIN 0648–AY23

Fisheries of the Northeastern United States; Black Sea Bass Recreational Fishery; Emergency Rule Correction and Extension

AGENCY: National Marine Fisheries Service (NMFS), National Oceanic and Atmospheric Administration (NOAA), Commerce.

ACTION: Temporary rules; correcting amendment and emergency action extension.

SUMMARY: NMFS is taking two actions through this rule: Correcting regulations in the October 5, 2009, emergency rule that closed the recreational black sea bass fishery in the Federal waters of the Exclusive Economic Zone (EEZ) from 3 to 200 nautical miles offshore, north of Cape Hatteras, NC; and extending of that initial closure. This action is necessary to both correct the implementing regulations of the initial closure that were inadvertently implemented with no end date, and to extend the prohibition on recreational fishing for black sea bass in the EEZ beyond the expiration of the initial closure period. The intent of the correction is to correct the regulatory language of the initial closure, thereby establishing an end date for the initial closure period, consistent with the intent of the initial rule. The intent of the emergency closure extension is to ensure that recreational mortality does not occur between the end date of the closure as specified in the correcting action of this rule, and the start of the 2010 black sea bass recreational fishery season recommendations of both the Mid-Atlantic Fishery Management Council (Council) and Atlantic States Marine Fisheries Commission (Commission).

DATES: Amendments to §§ 648.142 and 648.145 in amendatory instructions 2 through 4 are effective April 7, 2010, and the amendment to § 648.142 in amendatory instruction 5 is effective April 8, 2010 through 11:59 p.m., May 21, 2010.

FOR FURTHER INFORMATION CONTACT: Michael Ruccio, Fishery Policy Analyst, (978) 281–9104.

SUPPLEMENTARY INFORMATION:

Correction Rule

NMFS published an emergency rule to close Federal waters of the EEZ from 3 to 200 nautical miles offshore, north of Cape Hatteras, NC, to black sea bass recreational fishing in the **Federal Register** effective October 5, 2009 (74 FR 51092), for a period of 180 days. This closure was necessary as the information available indicated that the 2009 Recreational Harvest Limit (RHL), the annual catch level established for the recreational fishery, had been exceeded by a considerable amount. Subsequent to the closure implementation, information from the NMFS Marine Recreational Fisheries Statistics Survey (MRFSS) through August 2009 indicated black sea bass landings were 1,944,303 lb (882 mt). This exceeded the 2009 RHL of 1,137,810 lb (516 mt) by 71 percent.

An error occurred in promulgating the October 5, 2009, emergency closure rule. The rule was published in the **Federal Register** without specification of when the 180–day effective period would end. The rule became effective on October 5, 2009, and will remain in effect until modified by subsequent rulemaking. While NMFS clearly intended that the closure remain in effect for 180 days, consistent with the authority provided in section 305(c) of the Magnuson-Stevens Fishery Conservation and Management Act (Magnuson-Stevens Act), the lack of a published end date has been confusing to stakeholders, implements a regulation that would exceed the underlying authority used to implement the closure, and requires correction. Thus, this action is correcting the October 5, 2009 (74 FR 51092), rule so that the 180–day period end date of April 12, 2010, is provided, as originally intended by NMFS and consistent with the emergency authority in the Magnuson-Stevens Act.

Temporary Emergency Rule Extension

At the time of the initial emergency closure, NMFS, the Council, and Commission were in the process of finalizing 2010 black sea bass specifications (i.e., RHL and commercial fishery quota) and would be undertaking the initial phases of 2010 black sea bass recreational management measures shortly thereafter. It was not known exactly what the 2010 specifications would be when the closure was implemented, but the preliminary information available suggested that recreational landings in 2010 would have to be reduced from 2009 levels to ensure the 2010 RHL would not be exceeded. Thus, NMFS implemented a 180–day closure rather than implementing a closure effective only until the end of the 2009 fishing year. The expectation at the time of the closure was that the Council and Commission's joint management process for recommending recreational measures would occur through November and December 2009, with a final recommendation for managing the 2010 recreational black sea bass provided to NMFS early in 2010 for review, analysis, and rulemaking. Several unforeseen events have transpired in the interim since the initial closure was implemented on October 5, 2009. These events have made the 2010 black sea bass recreational management measures

development process more lengthy and more complex than anticipated, outlined as follows.

In December 2009, the Council and Commission developed recommended management measures for the 2010 recreational fishery. The measures were designed to achieve a 66–percent reduction in landings from projected 2009 levels, which was consistent with the black sea bass RHL of 1,137,810 lb (516 mt) previously adopted by the Council and Commission. The 66–percent reduction was calculated using 2009 landings data from Waves 1–4 (January-August), and projected landings for Waves 5 and 6 (September-December), as data for Waves 5 and 6 were not available at the time the Council and Commission met.

On December 22, 2009, NMFS published a final rule implementing the specifications for the 2010 black sea bass fishing year. These specifications, effective January 1, 2010, included total allowable landings (TAL) for black sea bass of 2.3 million lb (1,043 mt), of which 1,137,810 lb (516 mt) was allocated to the recreational fishery as the RHL. This TAL and RHL was consistent with the recommendations of the Council and Commission.

In early January 2010, the Council's Scientific and Statistical Committee (SSC) convened to reconsider their previous recommendations regarding the Acceptable Biological Catch (ABC) for black sea bass for the 2010 fishing year. The SSC concluded that the ABC for black sea bass could be increased from 2.71 million lb (1,229 mt) to 4.5 million lb (2,041 mt), which was consistent with catch levels established for 2008.

In response, on January 15, 2010, the Council submitted a letter to NMFS requesting that the agency take emergency action to increase the black sea bass TAL for 2010 consistent with the revised ABC. The letter requested that NMFS increase both the 2010 commercial quota and RHL for black sea bass.

On February 10, 2010, in response to the Council's request, NMFS published an emergency rule to increase the 2010 black sea bass TAL from 2.3 million lb (1,043 mt) to 3.7 million lb (1,678 mt), and to increase the RHL to 1,830,390 lb (830 mt) (the commercial quota was also increased to 1,758,610 lb (798 mt)).

In mid-February 2010, the Commission and Council met separately to reconsider the recreational fishery management measures developed in December 2009. The measures adopted in December 2009 were designed to achieve a 66–percent reduction in black sea bass landings relative to 2009, but with the increased RHL implemented in the emergency rule, only a 44–percent reduction appeared necessary. Both the Council and Commission retained the status quo minimum fish size of 12.5 inches (31.75 cm) and 25–fish bag limit, but the two groups adopted different seasons. The Commission adopted a single season from May 22–September 12, and the Council recommended a split season from May 22–August 8 and September 4–October 4. Both sets of measures are projected to achieve the target 44–percent reduction in landings.

NMFS is currently reviewing the recommendations made by the Council for the 2010 black sea bass recreational fishery. The Council initially submitted for review materials analyzing the recommendations and alternatives reviewed in December 2009; however, on March 3, 2010, the Council submitted an addendum to include the new recommendation developed at its February 2010 meeting. NMFS is currently developing a proposed rule for summer flounder, scup, and black sea bass recreational fishing measures for the 2010 fishing year, and this proposed rule is expected to publish soon. With this rule, NMFS will solicit comments from the public on the Council's recommendations for the black sea bass recreational fishery, as well as other alternatives that may be available, and, once the public comment period is closed, will publish a final rule to implement the final management measures for 2010.

Absent this action, the emergency closure of the black sea bass recreational fishery would expire on April 12, 2010. However, both the Council and Commission have proposed fishing seasons that open on May 22, 2010. In order to preserve the fishing seasons proposed by both groups, and to ensure that the Federal management measures are consistent, to the maximum extent practicable, with state management measures, this action is necessary to extend the closure of the black sea bass recreational fishery through May 21, 2010.

The 44–percent reduction in landings utilized by both the Council and Commission to develop their February recommendations makes use of landings projections for both MRFSS 2009 Wave 5 and 6 (September-October and November-December, respectively). The calculations for this projection were performed by the Council's Black Sea Bass Monitoring Committee (Monitoring Committee). When the Monitoring Committee met in November 2009 to discuss black sea bass recreational management measures, it acknowledged that the closure likely had some impact on landings, but that it could not quantify the impact at that time. The Monitoring Committee utilized a precautionary approach and assumed the EEZ black sea bass closure had no effect on landings because it was known that some level of fishing continued in state waters. It was expected that 2009 MRFSS Wave 5 data would be available in mid-December 2009, which would have allowed for a more informed analysis of the closure impacts on landings.

Issues related to sampling size and the telephone survey frame of the 2009 MRFSS Wave 5 have required extensive additional analyses. Thus, the data are not yet available to inform decisionmaking on 2010 black sea bass recreational fishery management measures. It is expected that the Wave 5 data will be available in April 2010, when the final 2009 MRFSS data are available. There is significant interest in how the Wave 5 data may differ from the projection used to derive the 44–percent reduction in landings utilized by the Council and Commission to 2010 black sea bass recreational management measures.

Preliminary 2009 MRFSS Wave 6 data are now available, and NMFS has incorporated these data into the analysis of 2009 recreational landings. The black sea bass fishery was closed in the EEZ for the entire Wave 6 timeframe in 2009. The preliminary Wave 6 data indicate that 2009 landings were approximately 75–percent lower than the 2008 Wave 6 level. NMFS has conducted additional projections that make use of the preliminary 2009 Wave 6 data in conjunction with different assumptions about the impact the EEZ closure had on landings between the October 6–31, 2009, period during Wave 5 2009. Based on these revised projections, it appears likely that the percent reduction in landings from 2009 levels necessary for 2010 may be less than 44 percent. NMFS anticipates being able to fully evaluate the 2009 Wave 5 data, when available, before a final rule for the 2010 black sea bass recreational management measures is implemented, and will adjust, as appropriate, the percent reduction in 2010 landings accordingly.

In the interim, it is necessary to extend the emergency closure of the recreational black sea bass fishery in the EEZ until 11:59 p.m., May 21, 2010, for several reasons. Even under the most liberalized projections for 2009 Wave 5, a reduction in landings remains necessary, and the magnitude required is sufficient to preclude fishing until May 22, 2010, the current preferred opening date for both the Council and Commission's 2010 recreational fishing

seasons. NMFS requires additional time to analyze the 2009 Wave 5 data and to confer with the Council, Commission, and the public regarding the final measures to be implemented for 2010. By ensuring that the EEZ remains closed between April 12, 2010, and the start of the current Council and Commission-preferred season start date of May 22, 2010, NMFS can ensure that these additional considerations occur in an open and transparent manner. The correction and extension implemented by this action will also help avoid confusion on when fishing may resume in the EEZ, and should provide a date certain for the season to begin for business and angler planning purposes. The actions of this rule build a necessary bridge to the planned notice-and-comment rulemaking that will be conducted to establish the final 2010 black sea bass recreational management measures. A proposed rule is anticipated in April 2010, with final rulemaking anticipated for June.

Comments and Responses

A 30–day public comment period was provided on the initial 180–day closure rule. NMFS did not receive any specific comments relating to a potential extension of the initial 180–day closure. The initial closure was highly controversial and a great deal of negative reaction was received through telephone calls, e-mail, correspondence, and in the press through various media. Many of the individuals providing feedback stated surprise that the closure was being implemented, took exception to the use of MRFSS data as the basis for the overage calculations, and discussed negative socio-economic impacts related to the closure. Others stated that the closure had no biological basis, as the stock was not subject to overfishing. Litigation has been filed (*UNITED BOATMEN ET AL.* v. *LOCKE ET AL.*, Case 3:09–cv–05628–JAP-LHG) that seeks, among other things, a prohibition on utilizing MRFSS data to inform inseason recreational management actions. The full scope of complaints registered by the public regarding the initial 180–day closure appear in the plaintiff's motion for relief and, as such, NMFS will respond to them through the litigation process in briefs to the court. Some may find the extension of the emergency action controversial; however, extending the closure is necessary as previously outlined.

Classification

The Administrator, Northeast Region, NMFS, determined that this emergency rule extension is necessary for the conservation and management of the black sea bass fishery and that it is consistent with the Magnuson-Stevens Fishery Conservation and Management Act and other applicable laws.

The Assistant Administrator for Fisheries, NOAA, finds good cause pursuant to 5 U.S.C. 553(d)(3) to make this rule effective immediately, thereby waiving the 30–day delayed effective date required by 5 U.S.C. 553(d). The Assistant Administrator also finds it is unnecessary and contrary to the public interest to provide any additional notice and opportunity for public comment under 5 U.S.C. 553(b)(B) prior to publishing the emergency rule extension.

The need to correct the initial emergency rule language to specify an end date and to extend this emergency closure action for an additional 39 days was not evident until February 24, 2010, when the Council notified NMFS of its intent to prepare an addendum to its initial recommendation for 2010 black sea bass recreational management measures. Prior to this date, it was unknown what course of action was likely for the 2010 fishing season and if the Council-preferred action would require extension of the 180–day closure. In examining options for extending the closure to better synchronize with the Council and Commission-preferred season opening dates, NMFS became aware of the error in the initial emergency closure rule that lacked an end date, despite the lapse in authority provided by the Magnuson-Stevens Act, effective April 12, 2010.

Typically, the process for recreational management measures begins with a joint-Council and Commission meeting in early December; a formal recommendation is conveyed to NMFS, including appropriate analyses, in late January or early February, and rulemaking is conducted with a June 1 target implementation date. However, the 2010 process has been more complex and lengthy than usual. The Council's SSC provided an increased ABC recommendation in early January 2010, NMFS conducted emergency rulemaking to increase the 2010 black sea bass TAL (including increased RHL) and both the Council and Commission, who co-manage black sea bass in state and Federal waters, respectively, had separate meetings in early February 2010 wherein new recreational management measure recommendations were adopted. As a result, both groups have conducted analysis that indicate that 2010 black sea bass recreational harvest should be decreased by 44 percent from 2009 levels. To achieve this reduction, both the Council and Commission have recommended seasons that will begin no earlier than May 22, 2010. These recommendations were not formalized until recently. Extension of the emergency closure was developed as expediently as possible; however, it was not foreseeable that the extension would be necessary until the last week of February 2010, nor was it evident that the initial 180–closure rule needed to be corrected until NMFS undertook a more detailed examination of how the Code of Federal Regulations was modified by the initial closure.

It is now evident that the initial emergency closure contained an error by not specifying April 12, 2010, as the end of the 180–day period, and, that it must be corrected. The 2010 recreational management measures process has unfolded sufficiently to make it evident that the existing recreational closure of the EEZ must remain effective until at least May 22, 2010, to ensure that the fishing mortality objectives for the 2010 recreational black sea bass fishery are not changed from the levels contained in the Council and Commission's analyses. If the initial emergency rule was not corrected, the EEZ closure would remain in effect indefinitely, despite the regulatory authority for the closure expiring on April 12, 2010. This would create a confusing and difficult situation for fishery participants. If the black sea bass recreational fishery were reopened in the EEZ effective April 12, 2010, the current expiration date of the initial 180–day closure, it is expected that recreational fishing would resume in the EEZ. The Council and Commission's preferred 2010 recreational management measures presume that no fishing will occur until at least May 22; thus, if the emergency closure is not extended by 39 days, the projections for 2010 fishing mortality will be violated. The additional mortality that would occur if fishing resumed prior to May 22 would require additional action by NMFS to further modify 2010 measures to ensure the required reduction in 2010 landings occurs. Moreover, implementation of recreational management measures would likely be further delayed while NMFS conducted additional analyses to understand the stock impacts of reopening the EEZ before the recommended May 22 date. Additional delays in the already complicated and delayed 2010 process would not benefit the angling public for planning purposes and would likely result in different measures in state and Federal waters, a situation that the Council and Commission have sought to avoid by

recommending similar measures for 2010.

Waiver of the 30–day delay in effectiveness period will ensure that the existing recreational black sea bass EEZ closure date will be clarified by the corrective action of this rule and that the closure will remain effective for an additional 39 days until 11:59 p.m., May 21, 2010. This will ensure that development of 2010 black sea bass recreational management measures will be based on the most up-to-date data, and that the mortality objectives are not compromised by reopening the fishery before the Council and Commission preferred start date of May 22. Furthermore, the correction and extension of the closure provides a date certain for the start of the 2010 fishing season so that the interested public and fishery-dependent businesses can plan accordingly. It was not practicable to promulgate the correction and extension more expediently, given the unforeseen circumstances outlined in the preamble to this rule. Public comment was solicited on the initial 180–day emergency rule, as outlined in the preamble. For the reasons outlined herein, it is contrary to the public interest to provide any additional notice and opportunity for public comment under 5 U.S.C. 553(b)(B) prior to publication of this emergency rule extension.

This final rule has been determined to be not significant for purposes of Executive Order 12866.

This rule is exempt from the procedures of the Regulatory Flexibility Act because the rule is not subject to the requirement to provide prior notice and opportunity for public comment pursuant to 5 U.S.C. 553 or any other law.

List of Subjects in 50 CFR Part 648

Fisheries, Fishing, Reporting and recordkeeping requirements.

Dated: April 1, 2010.

Eric C. Schwaab,

Assistant Administrator for Fisheries, National Marine Fisheries Service.

■ For the reasons set out in the preamble, 50 CFR part 648 is amended as follows:

PART 648--FISHERIES OF THE NORTHEASTERN UNITED STATES

■ 1. The authority citation for part 648 continues to read as follows:

Authority: 16 U.S.C. 1801 *et seq.*

§ 648.142 [Corrected]

■ 2. In § 648.142, remove "may not possess" and add in its place "may possess".

■ 3. In § 648.142, remove "after October 5, 2009" and add in its place "from January 1, 2010 through December 31, 2010".

§ 648.145 [Corrected]

■ 4. In the first sentence of § 648.145 paragraph (a), remove the phrase "black sea bass after October 5, 2009" and add in its place "more than 25 black sea bass".

■ 5. In § 648.142, the existing text of the paragraph is suspended, and paragraph § 648.142(a) and (b) are added to read as follows:

§ 648.142 Time restrictions.

(a) Vessels that are not eligible for a moratorium permit under § 648.4(a)(7), and fishermen subject to the possession limit, may not possess black sea bass from April 8, 2010 through 11:59 p.m., May 21, 2010, unless this time period is adjusted pursuant to the procedures in § 648.140.

(b) [Reserved]

[FR Doc. 2010–7882 Filed 4–6–10; 8:45 am]

BILLING CODE 3510–22–S

Proposed Rules

Federal Register
Vol. 75, No. 66
Wednesday, April 7, 2010

This section of the FEDERAL REGISTER contains notices to the public of the proposed issuance of rules and regulations. The purpose of these notices is to give interested persons an opportunity to participate in the rule making prior to the adoption of the final rules.

FEDERAL HOUSING FINANCE AGENCY

12 CFR Part 1203

DEPARTMENT OF HOUSING AND URBAN DEVELOPMENT

Office of Federal Housing Enterprise Oversight

12 CFR Part 1705

RIN 2590–AA29

Equal Access to Justice Act Implementation

AGENCY: Federal Housing Finance Agency, HUD, Office of Federal Housing Enterprise Oversight.

ACTION: Notice of proposed rulemaking.

SUMMARY: The Federal Housing Finance Agency (FHFA) proposes to issue a regulation that would codify the authority and responsibility of FHFA to establish procedures for the submission and consideration of applications for awards of fees and other expenses by prevailing parties in adjudications against FHFA.

DATES: Comments regarding this Notice of Proposed Rulemaking must be received on or before May 24, 2010. For additional information, see **SUPPLEMENTARY INFORMATION**.

ADDRESSES: You may submit your comments on the proposed regulation, identified as RIN "2590–AA29" by any of the following methods:

- *U.S. Mail, United Parcel Service, Federal Express, or Other Mail Service:* The mailing address for comments is: Alfred M. Pollard, General Counsel, Attention: Comments/RIN 2590–AA29, Federal Housing Finance Agency, Fourth Floor, 1700 G Street, NW., Washington, DC 20552.
- *Hand Delivered/Courier:* The hand delivery address is: Alfred M. Pollard, General Counsel, Attention: Comments/RIN 2590–AA29, Federal Housing Finance Agency, Fourth Floor, 1700 G Street, NW., Washington, DC 20552. The package should be logged at the Guard Desk, First Floor, on business days between 9 a.m. and 5 p.m.
- *E-mail:* Comments to Alfred M. Pollard, General Counsel may be sent by e-mail to *RegComments@fhfa.gov.* Please include "RIN 2590–AA29" in the subject line of the message.
- *Federal eRulemaking Portal: http://www.regulations.gov.* Follow the instructions for submitting comments. If you submit your comment to the Federal eRulemaking Portal, please also send it by e-mail to FHFA at *RegComments@fhfa.gov* to ensure timely receipt by the agency. Include the following information in the subject line of your submission: "RIN 2590–AA29."

FOR FURTHER INFORMATION CONTACT: Janice A. Kullman, Associate General Counsel, telephone (202) 414–8970 (not a toll-free number); Federal Housing Finance Agency, Fourth Floor, 1700 G Street, NW., Washington, DC 20552. The telephone number for the Telecommunications Device for the Deaf is (800) 877–8339.

SUPPLEMENTARY INFORMATION:

I. Comments

The Federal Housing Finance Agency (FHFA) invites comments on all aspects of the proposed regulation, and will consider all relevant comments before issuing the final regulation. Copies of all comments will be posted without change, including any personal information you provide, such as your name and address, on the FHFA Web site at: *http://www.fhfa.gov*. In addition, copies of all comments received will be available for examination by the public on business days between the hours of 10 a.m. and 3 p.m., at the Federal Housing Finance Agency, Fourth Floor, 1700 G Street, NW., Washington, DC 20552. To make an appointment to inspect comments, please call the Office of General Counsel (FHFA) at (202) 414–6924.

II. Background

A. Establishment of the Federal Housing Finance Agency

The Housing and Economic Recovery Act of 2008 (HERA), Public Law 110–289, 122 Stat. 2654, amended the Federal Housing Enterprises Financial Safety and Soundness Act of 1992 (12 U.S.C. 4501 *et seq.*) (Safety and Soundness Act) to establish FHFA as an independent agency of the Federal Government.[1] FHFA was established to oversee the prudential operations of the Federal National Mortgage Association, the Federal Home Loan Mortgage Corporation (collectively, Enterprises), and the Federal Home Loan Banks (collectively with Enterprises, regulated entities) and to ensure that they operate in a safe and sound manner including being capitalized adequately; foster liquid, efficient, competitive and resilient national housing finance markets; comply with the Safety and Soundness Act and rules, regulations, guidelines and orders issued under the Safety and Soundness Act, and the respective authorizing statutes of the regulated entities; and carry out their missions through activities authorized and consistent with the Safety and Soundness Act and their authorizing statutes; and, that the activities and operations of the regulated entities are consistent with the public interest.

The Office of Federal Housing Enterprise Oversight (OFHEO) and the Federal Housing Finance Board (FHFB) were abolished on July 30, 2009, one year after the enactment of HERA. However, the regulated entities continue to operate under regulations promulgated by OFHEO and FHFB and such regulations are enforceable by the Director of FHFA until such regulations are modified, terminated, set aside, or superseded by the Director of FHFA.[2]

B. Equal Access to Justice Act

The Equal Access to Justice Act, 5 U.S.C. 504, requires that an agency that conducts adversarial adjudications award costs and fees in connection with that adjudication to the prevailing party unless the adjudicative officer of the agency finds that the agency's position was substantially justified or other circumstances make such an award unjust. Because FHFA conducts adversarial adjudications, FHFA proposes to issue a regulation to codify the responsibility of FHFA to establish procedures for the submission and consideration of applications for awards of fees and other expenses by prevailing parties. After the proposed regulation is published in its final form, the OFHEO "Implementation of the Equal Access to

[1] *See* Division A, titled the "Federal Housing Finance Regulatory Reform Act of 2008," Title I, Section 1101 of HERA.

[2] *See* section 1302 and section 1312 of HERA.

Justice Act" regulation at 12 CFR part 1705 will be removed. This proposed regulation is substantially the same as that OFHEO regulation.

III. Section-by-Section Analysis

The following is a section-by-section analysis of the proposed regulation.

Subpart A—General Provisions

Section 1203.1 Purpose and Scope

Proposed § 1203.1 would provide that the purpose of this regulation is to implement the Equal Access to Justice Act, 5 U.S.C. 504, by establishing procedures for the filing and consideration of applications for awards of fees and other expenses to eligible individuals and entities who are parties to adversary adjudications before FHFA. This section would also provide that the purpose of this part is to award fees and other expenses in connection with adversary adjudications before FHFA.

Section 1203.2 Definitions

This proposed section would set forth definitions for the regulation.

Adjudicative officer would be defined as the official who presided at the underlying adversary adjudication, without regard to whether the official is designated as a hearing examiner, administrative law judge, administrative judge, or otherwise.

Adversary adjudication would be defined as an administrative proceeding conducted by FHFA under 5 U.S.C. 554 in which the position of FHFA or any other agency of the United States is represented by counsel or otherwise, including but not limited to an adjudication conducted under the Safety and Soundness Act, as amended, and any implementing regulations. Any issue as to whether an administrative proceeding is an adversary adjudication for purposes of this part will be an issue for resolution in the proceeding on the application for award.

Affiliate would be defined as an individual, corporation, or other entity that directly or indirectly controls or owns a majority of the voting shares or other interests of the party, or any corporation or other entity of which the party directly or indirectly owns or controls a majority of the voting shares or other interest, unless the adjudicative officer determines that it would be unjust and contrary to the purpose of the Equal Access to Justice Act in light of the actual relationship between the affiliated entities to consider them to be affiliates for purposes of this part.

Agency counsel would be defined as the attorney or attorneys designated by the General Counsel of FHFA to represent FHFA in an adversary adjudication covered by this part.

Demand of FHFA would be defined as the express demand of FHFA that led to the adversary adjudication, but does not include a recitation by FHFA of the maximum statutory penalty when accompanied by an express demand for a lesser amount.

Director would be defined as the Director of the Federal Housing Finance Agency.

Fees and other expenses would be defined as including reasonable attorney or agent fees, the reasonable expenses of expert witnesses, and the reasonable cost of any study, analysis, engineering report, test, or expense which the agency finds necessary for the preparation of the eligible party's case.

FHFA would be defined as the Federal Housing Finance Agency.

Final disposition date would be defined as the date on which a decision or order disposing of the merits of the adversary adjudication or any other complete resolution of the adversary adjudication, such as a settlement or voluntary dismissal, becomes final and unappealable, both within the agency and to the courts.

Party would be defined as an individual, partnership, corporation, association, or public or private organization that is named or admitted as a party, that is admitted as a party for limited purposes, or that is properly seeking and entitled as of right to be admitted as a party in an adversary adjudication.

Position of FHFA would be defined as the position taken by FHFA in the adversary adjudication, including the action or failure to act by FHFA upon which the adversary adjudication was based.

Section 1203.3 Eligible Parties

Proposed § 1203.3 would set out the eligibility requirements for parties seeking fees and expenses.

Proposed paragraph (a) of this section would require the applicant to be a party to the adversary adjudication for which it seeks an award and be a small entity as defined in 5 U.S.C. 601. It would also require an applicant to meet all conditions of eligibility set out in this paragraph and comply with all the requirements in subpart B of this part.

Proposed paragraph (b) of this section would require that a party be one of the following:

- An individual who has a net worth of not more than $2 million;
- The sole owner of an unincorporated business who has a net worth of not more than $7 million, including both personal and business interest, and not more than 500 employees; however, a party who owns an unincorporated business will be considered to be an "individual" rather than the "sole owner of an unincorporated business" if the issues on which the party prevails are related primarily to personal interests rather than to business interests;
- A charitable or other tax-exempt organization described in section 501(c)(3) of the Internal Revenue Code, 26 U.S.C. 501(c)(3), with not more than 500 employees;
- A cooperative association as defined in section 15(a) of the Agricultural Marketing Act, 12 U.S.C. 1141j(a), with not more than 500 employees; or
- Any other partnership, corporation, association, unit of local government, or organization that has a net worth of not more than $7 million and not more than 500 employees.

Proposed paragraph (c) of this section would clarify the requirements for eligibility by requiring that:

- The employees of a party must include all persons who regularly perform services for remuneration for the party, under the party's direction and control. Part-time employees must be included on a proportional basis.
- The net worth and number of employees of the party and its affiliates must be aggregated to determine eligibility.
- The net worth and number of employees of a party will be determined as of the date the underlying adversary adjudication was initiated.
- A party that participates in an adversary adjudication primarily on behalf of one or more entities that would be ineligible for an award is not itself eligible for an award.

Section 1203.4 Standards for Awards

Proposed § 1203.4 would set out the standards for the award of fees and expenses.

Proposed paragraph (a) of this section would provide that an eligible party that files an application for award of fees and other expenses in accordance with this part would receive an award of fees and other expenses related to defending against a demand of FHFA if the demand was in excess of the decision in the underlying adversary adjudication and was unreasonable when compared with the decision under the facts and circumstances of the case, unless the party has committed a willful violation of law or otherwise acted in bad faith, or unless special circumstances make an award unjust. This paragraph would also explain that the burden of proof that the demand of FHFA was

substantially in excess of the decision and is unreasonable when compared with the decision would be on the eligible party.

Proposed paragraph (b) of this section would provide that an eligible party that submits an application for award in accordance with this part would receive an award of fees and other expenses incurred in connection with an adversary adjudication in which it prevailed or in a significant and discrete substantive portion of the adversary adjudication in which it prevailed, unless the position of FHFA in the adversary adjudication was substantially justified or special circumstances make an award unjust. This paragraph would further explain that FHFA would have the burden of proof to show that its position was substantially justified and could do so by showing that its position was reasonable in law and in fact.

Section 1203.5 Allowable Fees and Expenses

Proposed § 1203.5 would set forth what fees and expenses a party may collect under this part.

Proposed paragraph (a) of this section would provide that awards of fees and other expenses would be based on rates customarily charged by persons engaged in the business of acting as attorneys, agents, and expert witnesses, even if the services were made available without charge or at a reduced rate to the party. This paragraph would also explain that, except as provided in proposed § 1203.6, an award for the fee of an attorney or agent could not exceed $125 per hour and an award to compensate an expert witness could not exceed the highest rate at which FHFA pays expert witnesses. However, under this paragraph, an award could also include the reasonable expenses of the attorney, agent, or expert witness as a separate item if he or she ordinarily charges clients separately for such expenses.

Proposed paragraph (b) of this section would set out the factors the adjudicative officer must consider for determining the reasonableness of the fee, including the following:

- If the attorney, agent, or expert witness is in private practice, his or her customary fees for similar services; or, if the attorney, agent, or expert witness is an employee of the eligible party, the fully allocated costs of the services;
- The prevailing rate for similar services in the community in which the attorney, agent, or expert witness ordinarily performs services;
- The time actually spent in the representation of the eligible party;
- The time reasonably spent in light of the difficulty or complexity of the issues in the adversary adjudication; and
- Such other factors as may bear on the value of the services provided.

Proposed paragraph (c) of this section would provide that in determining the reasonable cost of any study, analysis, engineering report, test, project, or similar matter prepared on behalf of a party, the adjudicative officer would consider the prevailing rate for similar services in the community in which the services were performed.

Proposed paragraph (d) of this section would provide that fees and other expenses incurred before the date on which an adversary adjudication was initiated would be awarded only if the eligible party can demonstrate that they were reasonably incurred in preparation for the adversary adjudication.

Section 1203.6 Rulemaking on Maximum Rate for Fees

Proposed § 1203.6 would provide that FHFA could adopt regulations providing for an award of attorney or agent fees at a rate higher than $125 per hour in adversary adjudications covered by this part if warranted by an increase in the cost of living or by special circumstances. Special circumstances would include the limited availability of attorneys or agents who are qualified to handle certain types of adversary adjudications. This section would provide that FHFA could conduct any rulemaking proceedings for this purpose under the informal rulemaking procedures of the Administrative Procedure Act, 5 U.S.C. 553.

Section 1203.7 Awards Against Other Agencies

Proposed § 1203.7 would provide that if another agency of the United States participates in an adversary adjudication before FHFA and takes a position that was not substantially justified, the award or appropriate portion of the award to an eligible party that prevailed over that agency will be made against that agency.

Subpart B—Information Required From Applicants

Section 1203.10 Contents of the Application for Award

Proposed § 1203.10 would provide, under proposed paragraph (a) of this section, that an application for award of fees and other expenses under either proposed § 1203.4(a) or § 1203.4(b) would have to:

- Identify the applicant and the adversary adjudication for which an award is sought;
- State the amount of fees and other expenses for which an award is sought;
- Provide the statements and documentation required by paragraph (b) or (c) of this section and proposed § 1203.12 and any additional information required by the adjudicative officer; and
- Be signed by the applicant or an authorized officer or attorney of the applicant and contain or be accompanied by a written verification under oath or under penalty of perjury that the information provided in the application is true and correct.

Proposed paragraph (b) of this section would require that an application for award under proposed § 1203.4(a), must show that the demand of FHFA was substantially in excess of, and was unreasonable when compared to, the decision in the underlying adversary adjudication under the facts and circumstances of the case. This paragraph would also require the application to show that the applicant is a small entity as defined in 5 U.S.C. 601.

Proposed paragraph (c) of this section would set out the requirements for an application for award under proposed § 1203.4(b) including that the application must:

- Show that the applicant has prevailed in a significant and discrete substantive portion of the underlying adversary adjudication and identify the position of FHFA in the adversary adjudication that the applicant alleges was not substantially justified;
- State the number of employees of the applicant and describe briefly the type and purposes of its organization or business (if the applicant is not an individual);
- State that the net worth of the applicant does not exceed $2 million, if the applicant is an individual; or for all other applicants, state that the net worth of the applicant and its affiliates, if any, does not exceed $7 million; and
- Include one of the following:

—A detailed exhibit showing the net worth (net worth exhibit) of the applicant and its affiliates, if any, when the underlying adversary adjudication was initiated. The net worth exhibit may be in any form convenient to the applicant as long as the net worth exhibit provides full disclosure of the assets and liabilities of the applicant and its affiliates, if any, and is sufficient to determine whether the applicant qualifies as an eligible party;

—A copy of a ruling by the Internal Revenue Service that shows that the applicant qualifies as an organization described in section 501(c)(3) of the

Internal Revenue Code, 26 U.S.C. 501(c)(3); or in the case of a tax-exempt organization not required to obtain a ruling from the Internal Revenue Service on its exempt status, a statement that describes the basis for the belief that the applicant qualifies under such section; or

—A statement that the applicant is a cooperative association as defined in section 15(a) of the Agricultural Marketing Act, 12 U.S.C. 1141j(a).

Section 1203.11 Confidentiality of Net Worth Exhibit

Proposed § 1203.11 would state that unless otherwise ordered by the Director, or required by law, the statement of net worth will be for the confidential use of the adjudicative officer, the Director and agency counsel.

Section 1203.12 Documentation for Fees and Expenses

Proposed § 1203.12 would provide the requirements for documenting fees and expenses.

Proposed paragraph (a) of this section would require that the application for award should be accompanied by full and itemized documentation of the fees and other expenses for which an award is sought. This paragraph would further provide that the adjudicative officer could require the applicant to provide vouchers, receipts, logs, or other documentation for any fees or expenses claimed.

Proposed paragraph (b) of this section would require that a separate itemized statement be submitted for each entity or individual whose services are covered by the application and that each itemized statement must include:

- The hours spent by each entity or individual;
- A description of the specific services performed and the rates at which each fee has been computed; and
- Any expenses for which reimbursement is sought, the total amount claimed, and the total amount paid or payable by the applicant or by any other person or entity.

Subpart C—Procedures for Filing and Consideration of the Application for Award

Section 1203.20 Filing and Service of the Application for Award and Related Papers

Proposed § 1203.20 would set out the procedures for filing and service of an application for award.

Proposed paragraph (a) of this section would require that an application for an award of fees and other expenses must be filed no later than 30 days after the final disposition of the underlying adversary adjudication.

Proposed paragraph (b) of this section would require that an application for award and other papers related to the proceedings on the application for award must be filed and served on all parties in the same manner as papers are filed and served in the underlying adversary adjudication, except as otherwise provided in this part.

Proposed paragraph (c) of this section would require that the computation of time for filing and service of the application of award and other papers must be computed in the same manner as in the underlying adversary adjudication.

Section 1203.21 Response to the Application for Award

Proposed § 1203.21 would set out the procedure for responding to the application for an award.

Proposed paragraph (a) of this section would require that agency counsel file a response within 30 days after service of an application for award of fees and other expenses except as provided in proposed paragraphs (b) and (c) of this section. This paragraph would also require that agency counsel explain any objections to the award requested and identify the facts relied upon to support the objections. If any of the alleged facts are not already in the record of the underlying adversary adjudication, agency counsel would include with the response either supporting affidavits or a request for further proceedings under proposed § 1203.25.

Proposed paragraph (b) of this section would provide that if agency counsel and the applicant believe that the issues in the application for award can be settled, they may jointly file a statement of their intent to negotiate a settlement. The filing of this statement would extend the time for filing a response for an additional 30 days. Upon request by agency counsel and the applicant, the adjudicative officer could grant for good cause further time extensions.

Proposed paragraph (c) of this section would provide that agency counsel could request that the adjudicative officer extend the time period for filing a response. This paragraph would further provide that if agency counsel does not answer or otherwise does not contest or settle the application for award within the 30-day period or the extended time period, the adjudicative officer may make an award of fees and other expenses upon a satisfactory showing of entitlement by the applicant.

Section 1203.22 Reply to the Response

Proposed § 1203.22 would provide that within 15 days after service of a response, the applicant could file a reply. This section would further provide that if the reply is based on any alleged facts not already in the record of the underlying adversary adjudication, the applicant must include with the reply either supporting affidavits or a request for further proceedings under proposed § 1203.25.

Section 1203.23 Comments by Other Parties

Proposed § 1203.23 would provide that any party to the underlying adversary adjudication other than the applicant and agency counsel could file comments on an application for award within 30 calendar days after it is served, or on a response within 15 calendar days after it is served. This section would also provide that a commenting party may not participate further in proceedings on the application unless the adjudicative officer determines that the public interest requires such participation in order to permit full exploration of matters raised in the comments.

Section 1203.24 Settlement

Proposed § 1203.24 would provide that the applicant and agency counsel could agree on a proposed settlement of an award before the final decision on the application for award is made, either in connection with a settlement of the underlying adversary adjudication or after the underlying adversary adjudication has been concluded. This section would further require that if the eligible party and agency counsel agree on a proposed settlement of an award before an application for award has been filed, the application must be filed with the proposed settlement.

Section 1203.25 Further Proceedings on the Application for Award

Proposed § 1203.25 would set forth procedures for further proceedings on an application for award.

Proposed paragraph (a) of this section would provide that on request of either the applicant or agency counsel, on the adjudicative officer's own initiative, or as requested by the Director of FHFA under proposed § 1203.27, the adjudicative officer could order further proceedings, such as an informal conference, oral argument, additional written submissions, or, as to issues other than substantial justification (such as the applicant's eligibility or substantiation of fees and expenses), pertinent discovery or an evidential hearing. This paragraph would further

provide that such further proceedings will be held only when necessary for full and fair resolution of the issues arising from the application for award and will be conducted as promptly as possible. Last, this paragraph would require that the issue as to whether the position of FHFA in the underlying adversary adjudication was substantially justified must be determined on the basis of the whole administrative record that was made in the underlying adversary adjudication.

Proposed paragraph (b) of this section would require that a request that the adjudicative officer order further proceedings under this section would specifically identify the information sought on the disputed issues and must explain why the additional proceedings are necessary to resolve the issues.

Section 1203.26 Decision of the Adjudicative Officer

Proposed § 1203.26 would set forth the requirements for the decision of the adjudicative officer.

Proposed paragraph (a) of this section would provide that the adjudicative officer must make the initial decision on the basis of the written record, except if further proceedings are ordered under proposed § 1203.25.

Proposed paragraph (b) of this section would provide that the adjudicative officer must issue a written initial decision on the application for award within 30 days after completion of proceedings on the application. This paragraph would provide that the initial decision would become the final decision of FHFA after 30 days from the day it was issued, unless review is ordered under proposed § 1203.27.

Proposed paragraph (c) of this section would provide that in all initial decisions, the adjudicative officer would include findings and conclusions with respect to the applicant's eligibility and an explanation of the reasons for any difference between the amount requested by the applicant and the amount awarded. This paragraph would also provide that if the applicant has sought an award against more than one agency, the adjudicative officer must also include findings and conclusions with respect to the allocation of payment of any award made.

Proposed paragraph (d) of this section would provide that in initial decisions on applications filed pursuant to proposed § 1203.4(a), the adjudicative officer would include findings and conclusions as to whether FHFA made a demand that was substantially in excess of the decision in the underlying adversary adjudication and that was unreasonable when compared with that decision; and, if at issue, whether the applicant has committed a willful violation of the law or otherwise acted in bad faith, or whether special circumstances would make the award unjust.

Proposed paragraph (e) of this section would provide that in decisions on applications filed pursuant to proposed § 1203.4(b), the adjudicative officer would include written findings and conclusions as to whether the applicant is a prevailing party and whether the position of FHFA was substantially justified; and, if at issue, whether the applicant unduly protracted or delayed the underlying adversary adjudication or whether special circumstance make the award unjust.

Section 1203.27 Review by FHFA

Proposed § 1203.27 would provide that within 30 days after the adjudicative officer issues an initial decision under proposed § 1203.26, either the applicant or agency counsel could request the Director to review the initial decision of the adjudicative officer. This section would also provide that the Director or his or her designee could also decide, on his or her own initiative, to review the initial decision. Under this section, whether to review a decision would be at the discretion of the Director or his or her designee. If review is ordered, the Director or his or her designee would issue a final decision on the application for award or remand the application for award to the adjudicative officer for further proceedings under proposed § 1203.25.

Section 1203.28 Judicial Review

Proposed § 1203.28 would provide that any party, other than the United States, that is dissatisfied with the final decision on an application for award of fees and expenses under this part could seek judicial review as provided in 5 U.S.C. 504(c)(2).

Section 1203.29 Payment of Award

Proposed § 1203.29 would provide that to receive payment of an award of fees and other expenses granted under this part, the applicant would submit a copy of the final decision that grants the award and a certification that the applicant will not seek review of the decision in the United States courts to the Director, Federal Housing Finance Agency, 1700 G Street, NW., Washington, DC 20552. Under this section, FHFA would pay the amount awarded to the applicant within 60 days of receipt of the submission of the copy of the final decision and the certification, unless judicial review of the award has been sought by any party to the proceedings.

Regulatory Impacts

Paperwork Reduction Act

The proposed regulation does not contain any information collection requirement that requires the approval of the Office of Management and Budget under the Paperwork Reduction Act (44 U.S.C. 3501 *et seq.*).

Regulatory Flexibility Act

The Regulatory Flexibility Act (5 U.S.C. 601 *et seq.*) requires that a regulation that has a significant economic impact on a substantial number of small entities, small businesses, or small organizations must include an initial regulatory flexibility analysis describing the regulation's impact on small entities. Such an analysis need not be undertaken if the agency has certified that the regulation does not have a significant economic impact on a substantial number of small entities. 5 U.S.C. 605(b). FHFA has considered the impact of the proposed regulation under the Regulatory Flexibility Act and certifies that the proposed regulation is not likely to have a significant economic impact on a substantial number of small business entities. The regulation is applicable only to parties who have prevailed in an adjudication against FHFA. These parties will not represent a substantial number of small business entities.

List of Subjects in 12 CFR Parts 1203 and 1705

Administrative practice and procedure, Equal access to justice.

Authority and Issuance

Accordingly, for the reasons stated in the preamble, under the authority of 12 U.S.C. 4526 and 5 U.S.C. 504, FHFA proposes to amend Chapters XII and XVII of Title 12 of the Code of Federal Regulations, as follows:

CHAPTER XII—FEDERAL HOUSING FINANCE AGENCY

Subchapter A—Organization and Operations

1. Add part 1203 to subchapter A to read as follows:

PART 1203—EQUAL ACCESS TO JUSTICE ACT

Subpart A—General Provisions

Sec.

1203.1 Purpose and scope.
1203.2 Definitions.
1203.3 Eligible parties.
1203.4 Standards for awards.
1203.5 Allowable fees and expenses.

1203.6 Rulemaking on maximum rate for fees.
1203.7 Awards against other agencies.
1203.8–1203.9 [Reserved]

Subpart B—Information Required From Applicants

1203.10 Contents of the application for award.
1203.11 Confidentiality of net worth exhibit.
1203.12 Documentation for fees and expenses.
1203.13–1203.19 [Reserved]

Subpart C—Procedures for Filing and Consideration of the Application for Award

1203.20 Filing and service of the application for award and related papers.
1203.21 Answer to the application for award.
1203.22 Reply to the answer.
1203.23 Comments by other parties.
1203.24 Settlement.
1203.25 Further proceedings on the application for award.
1203.26 Decision of the adjudicative officer.
1203.27 Review by FHFA.
1203.28 Judicial review.
1203.29 Payment of award.

Authority: 12 U.S.C. 4526, 5 U.S.C. 504.

Subpart A—General Provisions

§ 1203.1 Purpose and scope.

(a) This part implements the Equal Access to Justice Act, 5 U.S.C. 504, by establishing procedures for the filing and consideration of applications for awards of fees and other expenses to eligible individuals and entities who are parties to adversary adjudications before FHFA.

(b) This part applies to the award of fees and other expenses in connection with adversary adjudications before FHFA. However, if a court reviews the underlying decision of the adversary adjudication, an award for fees and other expenses may be made only pursuant to 28 U.S.C. 2412(d)(3).

§ 1203.2 Definitions.

Adjudicative officer means the official who presided at the underlying adversary adjudication, without regard to whether the official is designated as a hearing examiner, administrative law judge, administrative judge, or otherwise.

Adversary adjudication means an administrative proceeding conducted by FHFA under 5 U.S.C. 554 in which the position of FHFA or any other agency of the United States is represented by counsel or otherwise, including but not limited to an adjudication conducted under the Safety and Soundness Act, as amended, and any implementing regulations. Any issue as to whether an administrative proceeding is an adversary adjudication for purposes of this part will be an issue for resolution in the proceeding on the application for award.

Affiliate means an individual, corporation, or other entity that directly or indirectly controls or owns a majority of the voting shares or other interests of the party, or any corporation or other entity of which the party directly or indirectly owns or controls a majority of the voting shares or other interest, unless the adjudicative officer determines that it would be unjust and contrary to the purpose of the Equal Access to Justice Act in light of the actual relationship between the affiliated entities to consider them to be affiliates for purposes of this part.

Agency counsel means the attorney or attorneys designated by the General Counsel of FHFA to represent FHFA in an adversary adjudication covered by this part.

Demand of FHFA means the express demand of FHFA that led to the adversary adjudication, but does not include a recitation by FHFA of the maximum statutory penalty when accompanied by an express demand for a lesser amount.

Director means the Director of the Federal Housing Finance Agency.

Fees and other expenses means reasonable attorney or agent fees, the reasonable expenses of expert witnesses, and the reasonable cost of any study, analysis, engineering report, test, or which the agency finds necessary for the preparation of the eligible party's case.

FHFA means the Federal Housing Finance Agency.

Final disposition date means the date on which a decision or order disposing of the merits of the adversary adjudication or any other complete resolution of the adversary adjudication, such as a settlement or voluntary dismissal, becomes final and unappealable, both within the agency and to the courts.

Party means an individual, partnership, corporation, association, or public or private organization that is named or admitted as a party, that is admitted as a party for limited purposes, or that is properly seeking and entitled as of right to be admitted as a party in an adversary adjudication.

Position of FHFA means the position taken by FHFA in the adversary adjudication, including the action or failure to act by FHFA upon which the adversary adjudication was based.

§ 1203.3 Eligible parties.

(a) To be eligible for an award of fees and other expenses under the Equal Access to Justice Act, the applicant must show that it meets all conditions of eligibility set out in this paragraph and has complied with all the requirements in Subpart B of this part. The applicant must also be a party to the adversary adjudication for which it seeks an award. To be eligible for an award of fees and other expenses for prevailing parties, a party must be one of the following:

(1) An individual who has a net worth of not more than $2 million;

(2) The sole owner of an unincorporated business who has a net worth of not more than $7 million, including both personal and business interest, and not more than 500 employees; however, a party who owns an unincorporated business will be considered to be an "individual" rather than the "sole owner of an unincorporated business" if the issues on which the party prevails are related primarily to personal interests rather than to business interests;

(3) A charitable or other tax-exempt organization described in section 501(c)(3) of the Internal Revenue Code, 26 U.S.C. 501(c)(3), with not more than 500 employees;

(4) A cooperative association as defined in section 15(a) of the Agricultural Marketing Act, 12 U.S.C. 1141j(a), with not more than 500 employees;

(5) Any other partnership, corporation, association, unit of local government, or organization that has a net worth of not more than $7 million and not more than 500 employees; or

(6) For the purposes of an application filed pursuant to 5 U.S.C. 504(a)(4), a small entity as defined in 5 U.S.C. 601.

(b) For purposes of eligibility under this section:

(1) The employees of a party must include all persons who regularly perform services for remuneration for the party, under the party's direction and control. Part-time employees must be included on a proportional basis.

(2) The net worth and number of employees of the party and its affiliates must be aggregated to determine eligibility.

(3) The net worth and number of employees of a party will be determined as of the date the underlying adversary adjudication was initiated.

(4) A party that participates in an adversary adjudication primarily on behalf of one or more entities that would be ineligible for an award is not itself eligible for an award.

§ 1203.4 Standards for awards.

(a) An eligible party that files an application for award of fees and other expenses in accordance with this part will receive an award of fees and other

expenses related to defending against a demand of FHFA if the demand was in excess of the decision in the underlying adversary adjudication and was unreasonable when compared with the decision under the facts and circumstances of the case, unless the party has committed a willful violation of law or otherwise acted in bad faith, or unless special circumstances make an award unjust. The burden of proof that the demand of FHFA was substantially in excess of the decision and is unreasonable when compared with the decision is on the eligible party.

(b) An eligible party that submits an application for award in accordance with this part will receive an award of fees and other expenses incurred in connection with an adversary adjudication in which it prevailed or in a significant and discrete substantive portion of the adversary adjudication in which it prevailed, unless the position of FHFA in the adversary adjudication was substantially justified or special circumstances make an award unjust. FHFA has the burden of proof to show that its position was substantially justified and may do so by showing that its position was reasonable in law and in fact.

§ 1203.5 Allowable fees and expenses.

(a) Awards of fees and other expenses will be based on rates customarily charged by persons engaged in the business of acting as attorneys, agents, and expert witnesses, even if the services were made available without charge or at a reduced rate to the party. However, except as provided in § 1203.6, an award for the fee of an attorney or agent may not exceed $125 per hour and an award to compensate an expert witness may not exceed the highest rate at which FHFA pays expert witnesses. However, an award may also include the reasonable expenses of the attorney, agent, or expert witness as a separate item if he or she ordinarily charges clients separately for such expenses.

(b) In determining the reasonableness of the fee sought for an attorney, agent, or expert witness, the adjudicative officer will consider the following:

(1) If the attorney, agent, or expert witness is in private practice, his or her customary fees for similar services; or, if the attorney, agent, or expert witness is an employee of the eligible party, the fully allocated costs of the services;

(2) The prevailing rate for similar services in the community in which the attorney, agent, or expert witness ordinarily performs services;

(3) The time actually spent in the representation of the eligible party;

(4) The time reasonably spent in light of the difficulty or complexity of the issues in the adversary adjudication; and

(5) Such other factors as may bear on the value of the services provided.

(c) In determining the reasonable cost of any study, analysis, engineering report, test, project, or similar matter prepared on behalf of a party, the adjudicative officer will consider the prevailing rate for similar services in the community in which the services were performed.

(d) Fees and other expenses incurred before the date on which an adversary adjudication was initiated will be awarded only if the eligible party can demonstrate that they were reasonably incurred in preparation for the adversary adjudication.

§ 1203.6 Rulemaking on maximum rate for fees.

If warranted by an increase in the cost of living or by special circumstances, FHFA may adopt regulations providing for an award of attorney or agent fees at a rate higher than $125 per hour in adversary adjudications covered by this part. Special circumstances include the limited availability of attorneys or agents who are qualified to handle certain types of adversary adjudications. FHFA will conduct any rulemaking proceedings for this purpose under the informal rulemaking procedures of the Administrative Procedure Act, 5 U.S.C. 553.

§ 1203.7 Awards against other agencies.

If another agency of the United States participates in an adversary adjudication before FHFA and takes a position that was not substantially justified, the award or appropriate portion of the award to an eligible party that prevailed over that agency will be made against that agency.

§§ 1203.8–1203.9 [Reserved]

Subpart B—Information Required From Applicants

§ 1203.10 Contents of the application for award.

(a) An application for award of fees and other expenses under either § 1203.4(a) and § 1203.4(b) must:

(1) Identify the applicant and the adversary adjudication for which an award is sought;

(2) State the amount of fees and other expenses for which an award is sought;

(3) Provide the statements and documentation required by paragraph (b) or (c) of this section and § 1203.12 and any additional information required by the adjudicative officer; and

(4) Be signed by the applicant or an authorized officer or attorney of the applicant and contain or be accompanied by a written verification under oath or under penalty of perjury that the information provided in the application is true and correct.

(b) An application for award under § 1203.4(a) must show that the demand of FHFA was substantially in excess of, and was unreasonable when compared to, the decision in the underlying adversary adjudication under the facts and circumstances of the case. It must also show that the applicant is a small entity as defined in 5 U.S.C. 601.

(c) An application for award under § 1203.4(b) must:

(1) Show that the applicant has prevailed in a significant and discrete substantive portion of the underlying adversary adjudication and identify the position of FHFA in the adversary adjudication that the applicant alleges was not substantially justified;

(2) State the number of employees of the applicant and describe briefly the type and purposes of its organization or business (if the applicant is not an individual);

(3) State that the net worth of the applicant does not exceed $2 million, if the applicant is an individual; or for all other applicants, state that the net worth of the applicant and its affiliates, if any, does not exceed $7 million; and

(4) Include one of the following:

(i) A detailed exhibit showing the net worth (net worth exhibit) of the applicant and its affiliates, if any, when the underlying adversary adjudication was initiated. The net worth exhibit may be in any form convenient to the applicant as long as the net worth exhibit provides full disclosure of the assets and liabilities of the applicant and its affiliates, if any, and is sufficient to determine whether the applicant qualifies as an eligible party;

(ii) A copy of a ruling by the Internal Revenue Service that shows that the applicant qualifies as an organization described in section 501(c)(3) of the Internal Revenue Code, 26 U.S.C. 501(c)(3); or in the case of a tax-exempt organization not required to obtain a ruling from the Internal Revenue Service on its exempt status, a statement that describes the basis for the belief that the applicant qualifies under such section; or

(iii) A statement that the applicant is a cooperative association as defined in section 15(a) of the Agricultural Marketing Act, 12 U.S.C. 1141j(a).

§ 1203.11 Confidentiality of net worth exhibit.

Unless otherwise ordered by the Director, or required by law, the statement of net worth will be for the confidential use of the adjudicative officer, the Director, and agency counsel.

§ 1203.12 Documentation for fees and expenses.

(a) The application for award must be accompanied by full and itemized documentation of the fees and other expenses for which an award is sought. The adjudicative officer may require the applicant to provide vouchers, receipts, logs, or other documentation for any fees or expenses claimed.

(b) A separate itemized statement must be submitted for each entity or individual whose services are covered by the application. Each itemized statement must include:

(1) The hours spent by each entity or individual;

(2) A description of the specific services performed and the rates at which each fee has been computed; and

(3) Any expenses for which reimbursement is sought, the total amount claimed, and the total amount paid or payable by the applicant or by any other person or entity.

§§ 1203.13–1203.19 [Reserved]

Subpart C—Procedures for Filing and Consideration of the Application for Award

§ 1203.20 Filing and service of the application for award and related papers.

(a) An application for an award of fees and other expenses must be filed no later than 30 days after the final disposition of the underlying adversary adjudication.

(b) An application for award and other papers related to the proceedings on the application for award must be filed and served on all parties in the same manner as papers are filed and served in the underlying adversary adjudication, except as otherwise provided in this part.

(c) The computation of time for filing and service of the application of award and other papers must be computed in the same manner as in the underlying adversary adjudication.

§ 1203.21 Answer to the application for award.

(a) Agency counsel must file a response within 30 days after service of an application for award of fees and other expenses except as provided in paragraphs (b) and (c) of this section. In the answer, agency counsel must explain any objections to the award requested and identify the facts relied upon to support the objections. If any of the alleged facts are not already in the record of the underlying adversary adjudication, agency counsel must include with the answer either supporting affidavits or a request for further proceedings under § 1203.25.

(b) If agency counsel and the applicant believe that the issues in the application for award can be settled, they may jointly file a statement of their intent to negotiate a settlement. The filing of this statement will extend the time for filing a response for an additional 30 days. Upon request by agency counsel and the applicant, the adjudicative officer may grant for good cause further time extensions.

(c) Agency counsel may request that the adjudicative officer extend the time period for filing a response. If agency counsel does not answer or otherwise does not contest or settle the application for award within the 30-day period or the extended time period, the adjudicative officer may make an award of fees and other expenses upon a satisfactory showing of entitlement by the applicant.

§ 1203.22 Reply to the answer.

Within 15 days after service of a response, the applicant may file a reply. If the reply is based on any alleged facts not already in the record of the underlying adversary adjudication, the applicant must include with the reply either supporting affidavits or a request for further proceedings under § 1203.25.

§ 1203.23 Comments by other parties.

Any party to the underlying adversary adjudication other than the applicant and agency counsel may file comments on an application for award within 30 calendar days after it is served, or on a response within 15 calendar days after it is served. A commenting party may not participate further in proceedings on the application unless the adjudicative officer determines that the public interest requires such participation in order to permit full exploration of matters raised in the comments.

§ 1203.24 Settlement.

The applicant and agency counsel may agree on a proposed settlement of an award before the final decision on the application for award is made, either in connection with a settlement of the underlying adversary adjudication or after the underlying adversary adjudication has been concluded. If the eligible party and agency counsel agree on a proposed settlement of an award before an application for award has been filed, the application must be filed with the proposed settlement.

§ 1203.25 Further proceedings on the application for award.

(a) On request of either the applicant or agency counsel, on the adjudicative officer's own initiative, or as requested by the Director under § 1203.27, the adjudicative officer may order further proceedings, such as an informal conference, oral argument, additional written submissions, or, as to issues other than substantial justification (such as the applicant's eligibility or substantiation of fees and expenses), pertinent discovery or an evidential hearing. Such further proceedings will be held only when necessary for full and fair resolution of the issues arising from the application for award and will be conducted as promptly as possible. The issue as to whether the position of FHFA in the underlying adversary adjudication was substantially justified will be determined on the basis of the whole administrative record that was made in the underlying adversary adjudication.

(b) A request that the adjudicative officer order further proceedings under this section must specifically identify the information sought on the disputed issues and must explain why the additional proceedings are necessary to resolve the issues.

§ 1203.26 Decision of the adjudicative officer.

(a) The adjudicative officer must make the initial decision on the basis of the written record, except if further proceedings are ordered under § 1203.25.

(b) The adjudicative officer must issue a written initial decision on the application for award within 30 days after completion of proceedings on the application. The initial decision will become the final decision of FHFA after 30 days from the day it was issued, unless review is ordered under § 1203.27.

(c) In all initial decisions, the adjudicative officer must include findings and conclusions with respect to the applicant's eligibility and an explanation of the reasons for any difference between the amount requested by the applicant and the amount awarded. If the applicant has sought an award against more than one agency, the adjudicative officer must also include findings and conclusions with respect to the allocation of payment of any award made.

(d) In initial decisions on applications filed pursuant to § 1203.4(a), the adjudicative officer must include

findings and conclusions as to whether FHFA made a demand that was substantially in excess of the decision in the underlying adversary adjudication and that was unreasonable when compared with that decision; and, if at issue, whether the applicant has committed a willful violation of the law or otherwise acted in bad faith, or whether special circumstances would make the award unjust.

(e) In decisions on applications filed pursuant to § 1203.4(b), the adjudicative officer must include written findings and conclusions as to whether the applicant is a prevailing party and whether the position of FHFA was substantially justified; and, if at issue, whether the applicant unduly protracted or delayed the underlying adversary adjudication or whether special circumstance make the award unjust.

§ 1203.27 Review by FHFA.

Within 30 days after the adjudicative officer issues an initial decision under § 1203.26, either the applicant or agency counsel may request the Director to review the initial decision of the adjudicative officer. The Director may also decide, at his or her discretion, to review the initial decision. If review is ordered, the Director must issue a final decision on the application for award or remand the application for award to the adjudicative officer for further proceedings under § 1203.25.

§ 1203.28 Judicial review.

Any party, other than the United States, that is dissatisfied with the final decision on an application for award of fees and expenses under this part may seek judicial review as provided in 5 U.S.C. 504(c)(2).

§ 1203.29 Payment of award.

To receive payment of an award of fees and other expenses granted under this part, the applicant must submit a copy of the final decision that grants the award and a certification that the applicant will not seek review of the decision in the United States courts to the Director, Federal Housing Finance Agency, 1700 G Street, NW., Washington, DC 20552. FHFA must pay the amount awarded to the applicant within 60 days of receipt of the submission of the copy of the final decision and the certification, unless judicial review of the award has been sought by any party to the proceedings.

CHAPTER XVII—OFFICE OF FEDERAL HOUSING ENTERPRISE OVERSIGHT, DEPARTMENT OF HOUSING AND URBAN DEVELOPMENT

PART 1705—[REMOVED]

2. Remove part 1705.

Dated: April 1, 2010.

Edward J. DeMarco,

Acting Director, Federal Housing Finance Agency.

[FR Doc. 2010–7889 Filed 4–6–10; 8:45 am]

BILLING CODE 8070–01–P

DEPARTMENT OF TRANSPORTATION

Federal Aviation Administration

14 CFR Part 39

[Docket No. FAA–2010–0364; Directorate Identifier 2009–NE–27–AD]

RIN 2120–AA64

Airworthiness Directives; Rolls-Royce plc RB211 Trent 700 and Trent 800 Series Turbofan Engines

AGENCY: Federal Aviation Administration (FAA), DOT.

ACTION: Notice of proposed rulemaking (NPRM).

SUMMARY: We propose to adopt a new airworthiness directive (AD) for the products listed above. This proposed AD results from mandatory continuing airworthiness information (MCAI) issued by an aviation authority of another country to identify and correct an unsafe condition on an aviation product. The MCAI describes the unsafe condition as: In completing a review of Engine Manual repair/acceptance limits for titanium compressor shafts, Rolls-Royce has found the specified limits to be incorrect such that the shot peened surface layer at life critical features (the axial dovetail slots) may have been inadvertently removed in-service. Removal of the shot peened layer results in increased vulnerability of the part to tensile stresses, which could reduce the life of the shaft to below the published life limits.

We are proposing this AD to prevent failure of the intermediate-pressure (IP) and high-pressure (HP) shaft, which could result in an overspeed condition, possible uncontained disc failure and damage to the airplane.

DATES: We must receive comments on this proposed AD by May 24, 2010.

ADDRESSES: You may send comments by any of the following methods:

- *Federal eRulemaking Portal:* Go to *http://www.regulations.gov* and follow the instructions for sending your comments electronically.
- *Mail:* Docket Management Facility, U.S. Department of Transportation, 1200 New Jersey Avenue, SE., West Building Ground Floor, Room W12–140, Washington, DC 20590–0001.
- *Hand Delivery:* Deliver to Mail address above between 9 a.m. and 5 p.m., Monday through Friday, except Federal holidays.
- *Fax:* (202) 493–2251.

Examining the AD Docket

You may examine the AD docket on the Internet at *http://www.regulations.gov;* or in person at the Docket Operations office between 9 a.m. and 5 p.m., Monday through Friday, except Federal holidays. The AD docket contains this proposed AD, the regulatory evaluation, any comments received, and other information. The street address for the Docket Operations office (telephone (800) 647–5527) is the same as the Mail address provided in the **ADDRESSES** section. Comments will be available in the AD docket shortly after receipt.

FOR FURTHER INFORMATION CONTACT: James Lawrence, Aerospace Engineer, Engine Certification Office, FAA, Engine and Propeller Directorate, 12 New England Executive Park, Burlington, MA 01803; e-mail: *james.lawrence@faa.gov;* telephone (781) 238–7176; fax (781) 238–7199.

SUPPLEMENTARY INFORMATION:

Comments Invited

We invite you to send any written relevant data, views, or arguments about this proposed AD. Send your comments to an address listed under the **ADDRESSES** section. Include "Docket No. FAA–2010–0364; Directorate Identifier 2009–NE–27–AD" at the beginning of your comments. We specifically invite comments on the overall regulatory, economic, environmental, and energy aspects of this proposed AD. We will consider all comments received by the closing date and may amend this proposed AD based on those comments.

We will post all comments we receive, without change, to *http://www.regulations.gov,* including any personal information you provide. We will also post a report summarizing each substantive verbal contact with FAA personnel concerning this proposed AD. Using the search function of the Web site, anyone can find and read the comments in any of our dockets, including, if provided, the name of the individual who sent the comment (or signed the comment on behalf of an association, business, labor union, etc.).

You may review the DOT's complete Privacy Act Statement in the Federal Register published on April 11, 2000 (65 FR 19477–78).

Discussion

The European Aviation Safety Agency (EASA), which is the Technical Agent for the Member States of the European Community, has issued EASA Airworthiness Directive 2009–0021 (Corrected February 9, 2009), dated February 6, 2009 (referred to after this as "the MCAI"), to correct an unsafe condition for the specified products. The MCAI states:

> In completing a review of Engine Manual repair/acceptance limits for titanium compressor shafts, Rolls-Royce has found the specified limits to be incorrect such that the shot peened surface layer at life critical features (the axial dovetail slots) may have been inadvertently removed in-service. Removal of the shot peened layer results in increased vulnerability of the part to tensile stresses, which could reduce the life of the shaft to below the published life limits. The acceptable limits for material loss on these surfaces have now been corrected in the Engine Manual.
>
> This AD identifies shafts for which such dressing operations have been known to have been carried out and requires that an inspection for compliance with the corrected Engine Manual limits be accomplished and that the shafts be dispositioned accordingly.

You may obtain further information by examining the MCAI in the AD docket.

Relevant Service Information

Rolls-Royce plc has issued Alert Service Bulletin RB.211–72–AG086, dated December 4, 2008. The actions described in this service information are intended to correct the unsafe condition identified in the MCAI.

FAA's Determination and Requirements of This Proposed AD

This product has been approved by the aviation authority of the United Kingdom, and is approved for operation in the United States. Pursuant to our bilateral agreement with the United Kingdom, they have notified us of the unsafe condition described in the MCAI and service information referenced above. We are proposing this AD because we evaluated all information provided by EASA and determined the unsafe condition exists and is likely to exist or develop on other products of the same type design.

Costs of Compliance

Based on the service information, we estimate that this proposed AD would affect about 12 products of U.S. registry. We also estimate that it would take about 8 work-hours per product to comply with this proposed AD. The average labor rate is $85 per work-hour. Required parts would cost about $15,000 per product. Based on these figures, we estimate the cost of the proposed AD on U.S. operators to be $188,160. Our cost estimate is exclusive of possible warranty coverage.

Authority for This Rulemaking

Title 49 of the United States Code specifies the FAA's authority to issue rules on aviation safety. Subtitle I, section 106, describes the authority of the FAA Administrator. "Subtitle VII: Aviation Programs," describes in more detail the scope of the Agency's authority.

We are issuing this rulemaking under the authority described in "Subtitle VII, Part A, Subpart III, Section 44701: General requirements." Under that section, Congress charges the FAA with promoting safe flight of civil aircraft in air commerce by prescribing regulations for practices, methods, and procedures the Administrator finds necessary for safety in air commerce. This regulation is within the scope of that authority because it addresses an unsafe condition that is likely to exist or develop on products identified in this rulemaking action.

Regulatory Findings

We determined that this proposed AD would not have federalism implications under Executive Order 13132. This proposed AD would not have a substantial direct effect on the States, on the relationship between the national Government and the States, or on the distribution of power and responsibilities among the various levels of government.

For the reasons discussed above, I certify this proposed regulation:

1. Is not a "significant regulatory action" under Executive Order 12866;

2. Is not a "significant rule" under the DOT Regulatory Policies and Procedures (44 FR 11034, February 26, 1979); and

3. Will not have a significant economic impact, positive or negative, on a substantial number of small entities under the criteria of the Regulatory Flexibility Act.

We prepared a regulatory evaluation of the estimated costs to comply with this proposed AD and placed it in the AD docket.

List of Subjects in 14 CFR Part 39

Air transportation, Aircraft, Aviation safety, Safety.

The Proposed Amendment

Accordingly, under the authority delegated to me by the Administrator, the FAA proposes to amend 14 CFR part 39 as follows:

PART 39—AIRWORTHINESS DIRECTIVES

1. The authority citation for part 39 continues to read as follows:

Authority: 49 U.S.C. 106(g), 40113, 44701.

§ 39.13 [Amended]

2. The FAA amends § 39.13 by adding the following new AD:

Rolls-Royce plc: Docket No. FAA–2010–0364; Directorate Identifier 2009–NE–27–AD.

Comments Due Date

(a) We must receive comments by May 24, 2010.

Affected Airworthiness Directives (ADs)

(b) None.

Applicability

(c) This AD applies to Rolls-Royce plc model (RR) RB211 Trent 768–60, 772–60, 772B–60, 875–17, 877–17, 884–17, 884B–17, 892–17, 892B–17, and 895–17 turbofan engines that have a compressor shaft listed by part number and serial number in Table 1 of this AD. These engines are installed on, but not limited to, Airbus A330 series and Boeing 777 series airplanes.

Reason

(d) This AD results from a review of engine manual repair/acceptance limits for titanium compressor shafts by RR. We are issuing this AD to prevent failure of the intermediate-pressure (IP) and high-pressure (HP) shaft, which could result in an overspeed condition, possible uncontained disc failure and damage to the airplane.

Actions and Compliance

(e) Unless already done, do the following actions.

(1) Perform a one-time, piece-part, full-focused inspection of the IP and HP compressor shafts listed by part number and serial number in Table 1 of this AD before exceeding the compliance period specified in Table 1 of this AD.

(2) Guidance on full-focused inspections and acceptance limits can be found in the current, applicable RR engine manual.

TABLE 1—LIST OF AFFECTED SHAFTS

Engine series	Affected component	Part No.	Shaft serial No.	Compliance period (flight cycles in service after December 4, 2008.)
Trent 800	1–8 IP Compressor Shaft	FK24100	MW0115238	750
Trent 800	1–4 HP Compressor Shaft	FK32580	MW0115512	750
Trent 800	1–4 HP Compressor Shaft	FK32580	MW0004708	2000
Trent 800	1–4 HP Compressor Shaft	FK32580	MW00063868	2500
Trent 800	1–8 IP Compressor Shaft	FK24100	DN65507	2500
Trent 800	1–8 IP Compressor Shaft	FK24100	DN65158	2500
Trent 800	1–4 HP Compressor Shaft	FK32580	MW0125467	3500
Trent 800	1–4 HP Compressor Shaft	FW11590	DN65189	3500
Trent 800	1–8 IP Compressor Shaft	FK24100	MW0091518	3500
Trent 800	1–8 IP Compressor Shaft	FK24100	MW0126365	3500
Trent 800	1–8 IP Compressor Shaft	FK24100	DN66422	4750
Trent 800	1–8 IP Compressor Shaft	FK24100	MW0203314	4750
Trent 700	1–8 IP Compressor Shaft	FK22279	DN63228	3250
Trent 700	1–8 IP Compressor Shaft	FK26048	MW0026046	4500

Other FAA AD Provisions

(f) *Alternative Methods of Compliance (AMOCs):* The Manager, Engine Certification Office, FAA, has the authority to approve AMOCs for this AD, if requested using the procedures found in 14 CFR 39.19.

Related Information

(g) Refer to MCAI EASA Airworthiness Directive 2009–0021 (Corrected 09 February, 2009), dated February 6, 2009, for related information.

(h) Contact James Lawrence, Aerospace Engineer, Engine Certification Office, FAA, Engine and Propeller Directorate, 12 New England Executive Park, Burlington, MA 01803; e-mail: *james.lawrence@faa.gov;* telephone (781) 238–7176; fax (781) 238–7199, for more information about this AD.

Issued in Burlington, Massachusetts, on March 31, 2010.

Peter A. White,

Assistant Manager, Engine and Propeller Directorate, Aircraft Certification Service.

[FR Doc. 2010–7830 Filed 4–6–10; 8:45 am]

BILLING CODE 4910–13–P

DEPARTMENT OF TRANSPORTATION

Federal Aviation Administration

14 CFR Part 39

[Docket No. FAA–2010–0342; Directorate Identifier 2002–NE–08–AD]

RIN 2120–AA64

Airworthiness Directives; Bombardier-Rotax GmbH Type 912 F, 912 S, and 914 F Series Reciprocating Engines

AGENCY: Federal Aviation Administration (FAA), DOT.

ACTION: Notice of proposed rulemaking (NPRM).

SUMMARY: The FAA proposes to supersede an existing airworthiness directive (AD) for certain serial numbers (S/Ns) of Bombardier-Rotax GmbH type 912 F and 914 F series reciprocating engines. That AD currently requires initial and repetitive visual inspections of the engine crankcase for cracks. This proposed AD would require those same inspections, would add the 912 S series to the affected population, add a test procedure to determine the engine suitability for a special flight permit, and would change applicability from engine S/N to crankcase S/N. This proposed AD results from an increase in the affected crankcase population. We are proposing this AD to prevent oil loss caused by cracks in the engine crankcase, which could lead to in-flight failure of the engine and forced landing.

DATES: We must receive any comments on this proposed AD by June 7, 2010.

ADDRESSES: Use one of the following addresses to comment on this proposed AD.

- *Federal eRulemaking Portal:* Go to *http://www.regulations.gov* and follow the instructions for sending your comments electronically.
- *Mail:* Docket Management Facility, U.S. Department of Transportation, 1200 New Jersey Avenue, SE., West Building Ground Floor, Room W12–140, Washington, DC 20590–0001.
- *Hand Delivery:* Deliver to Mail address above between 9 a.m. and 5 p.m., Monday through Friday, except Federal holidays.
- *Fax:* (202) 493–2251.

Contact BRP–Rotax GmbH & Co. KG, Welser Strasse 32, A–4623 Gunskirchen, Austria, for the service information identified in this proposed AD.

FOR FURTHER INFORMATION CONTACT: Richard Woldan, Aerospace Engineer, Engine Certification Office, FAA, Engine and Propeller Directorate, 12 New England Executive Park, Burlington, MA 01803–5299; telephone (781) 238–7136; fax (781) 238–7199.

SUPPLEMENTARY INFORMATION:

Comments Invited

We invite you to send any written relevant data, views, or arguments about this proposed AD. Send your comments to an address listed under the **ADDRESSES** section. Include "Docket No. FAA–2010–0342; Directorate Identifier 2002–NE–08–AD" at the beginning of your comments. We specifically invite comments on the overall regulatory, economic, environmental, and energy aspects of this proposed AD. We will consider all comments received by the closing date and may amend this proposed AD based on those comments.

We will post all comments we receive, without change, to *http://www.regulations.gov,* including any personal information you provide. We will also post a report summarizing each substantive verbal contact with FAA personnel concerning this proposed AD. Using the search function of the Web site, anyone can find and read the comments in any of our dockets, including, if provided, the name of the individual who sent the comment (or signed the comment on behalf of an association, business, labor union, *etc.*). You may review the DOT's complete Privacy Act Statement in the **Federal Register** published on April 11, 2000 (65 FR 19477–78).

Examining the AD Docket

You may examine the AD docket on the Internet at *http://*

www.regulations.gov; or in person at the Docket Operations office between 9 a.m. and 5 p.m., Monday through Friday, except Federal holidays. The AD docket contains this AD, the regulatory evaluation, any comments received, and other information. The street address for the Docket Operations office (telephone (800) 647–5527) is the same as the Mail address provided in the **ADDRESSES** section. Comments will be available in the AD docket shortly after receipt.

Discussion

On August 7, 2002, the FAA issued AD 2002–16–26, Amendment 39–12865 (67 FR 53296, August 15, 2002). That AD requires initial visual inspection for cracks in the engine crankcase of certain S/N engines, within 50 hours time-in-service (TIS) after the effective date of that AD, and repetitive visual inspections at each 100-hour, annual, or progressive inspection, or within 110 hours TIS since last inspection, whichever occurs first. If any cracks are found, the engine must be replaced. Austro Control GmbH (ACG), which is the airworthiness authority for Austria, notified the FAA that an unsafe condition may exist on certain S/Ns of Bombardier-Rotax GmbH type 912 F and 914 F series reciprocating engines. Austro Control GmbH advises that they have received reports of about 100 engine crankcases found cracked in service worldwide over the past 10 years. To date, no engine failures due to cracks in the crankcase were reported. However, ACG has determined that an engine could fail due to oil loss from a cracked crankcase. This condition, if not corrected, could result in an inflight failure of the engine and forced landing.

Actions Since AD 2002–16–26 Was Issued

Since that AD was issued, we determined that the affected crankcase population has increased, requiring us to expand the applicability of the AD. We also learned that Bombardier-Rotax has introduced a new design crankcase assembly that is not susceptible to the cracking issue. The introduction of the new crankcase design allows us to limit this proposed AD applicability to those crankcases with a S/N of 27811 or below, and to provide an optional terminating action to the repetitive inspections required by AD 2002–16–26.

Relevant Service Information

We have reviewed and approved the technical contents of Rotax Aircraft Engines Mandatory Service Bulletins (MSBs) SB–912–029, Revision 3, dated July 11, 2006, and SB–914–018, Revision 3, dated July 11, 2006, that describe procedures for inspecting the crankcase for cracks. The European Aviation Safety Agency (EASA), which is the Technical Agent for the Member States of the European Community, has classified these service bulletins as mandatory and issued EASA Airworthiness Directive 2007–0025, dated February 1, 2007 to ensure the airworthiness of these Bombardier-Rotax engines in Europe.

Differences Between the Proposed AD and the Service Information

Rotax Aircraft Engines MSBs specify applicability by engine S/N and replacement crankcase S/N. This proposed AD would specify applicability by crankcase S/N only.

Bilateral Agreement Information

Bombardier-Rotax GmbH type 912 F, 912 S, and 914 F series reciprocating engines are manufactured in Austria, and are type certificated for operation in the United States under the provisions of section 21.29 of the Federal Aviation Regulations (14 CFR 21.29) and the applicable bilateral airworthiness agreement. Pursuant to this bilateral airworthiness agreement, ACG has kept the FAA informed of the situation described above. The FAA has examined the findings of ACG, reviewed all available information, and determined that AD action is necessary for products of this type design that are certificated for operation in the United States.

FAA's Determination and Requirements of the Proposed AD

We have evaluated all pertinent information and identified an unsafe condition that is likely to exist or develop on other products of this same type design. We are proposing this AD, which would require initial visual inspection for cracks in the engine crankcase of certain S/N crankcases, within 50 hours time-in-service (TIS) after the effective date of this AD, and repetitive visual inspections at each 100-hour, annual, or progressive inspection, or within 110 hours TIS since last inspection, whichever occurs first. If any engine crankcase cracks are found, replace the engine before further flight. The proposed AD would require that you do these actions using the service information described previously.

Costs of Compliance

Based on the service information, we estimate that this proposed AD would affect about 250 products of U.S. registry. We also estimate that it would take about 3 work-hours per inspection and 20 work-hours to replace the crankcase to comply with this proposed AD. The average labor rate is $85 per work-hour. Required parts would cost about $6,500 per crankcase. Based on these figures and an estimate of one crankcase replaced per year, we estimate the annual cost of the proposed AD on U.S. operators to be $68,100. Our cost estimate is exclusive of possible warranty coverage.

Authority for This Rulemaking

Title 49 of the United States Code specifies the FAA's authority to issue rules on aviation safety. Subtitle I, Section 106 describes the authority of the FAA Administrator. Subtitle VII, Aviation Programs, describes in more detail the scope of the Agency's authority.

We are issuing this rulemaking under the authority described in Subtitle VII, Part A, Subpart III, Section 44701, "General requirements." Under that section, Congress charges the FAA with promoting safe flight of civil aircraft in air commerce by prescribing regulations for practices, methods, and procedures the Administrator finds necessary for safety in air commerce. This regulation is within the scope of that authority because it addresses an unsafe condition that is likely to exist or develop on products identified in this rulemaking action.

Regulatory Findings

We have determined that this proposed AD would not have federalism implications under Executive Order 13132. This proposed AD would not have a substantial direct effect on the States, on the relationship between the national Government and the States, or on the distribution of power and responsibilities among the various levels of government.

For the reasons discussed above, I certify that the proposed AD:

1. Is not a "significant regulatory action" under Executive Order 12866;

2. Is not a "significant rule" under the DOT Regulatory Policies and Procedures (44 FR 11034, February 26, 1979); and

3. Would not have a significant economic impact, positive or negative, on a substantial number of small entities under the criteria of the Regulatory Flexibility Act.

We prepared a regulatory evaluation of the estimated costs to comply with this proposed AD. See the **ADDRESSES** section for a location to examine the regulatory evaluation.

List of Subjects in 14 CFR Part 39

Air transportation, Aircraft, Aviation safety, Safety.

The Proposed Amendment

Accordingly, under the authority delegated to me by the Administrator, the Federal Aviation Administration proposes to amend 14 CFR part 39 as follows:

PART 39—AIRWORTHINESS DIRECTIVES

1. The authority citation for part 39 continues to read as follows:

Authority: 49 U.S.C. 106(g), 40113, 44701.

§ 39.13 [Amended]

2. The FAA amends § 39.13 by removing Amendment 39–12865 (67 FR 53296, August 15, 2002) and by adding a new airworthiness directive, to read as follows:

Bombardier-Rotax GmbH (formerly Rotax, Motorenfabrik): Docket No. FAA–2010–0342; Directorate Identifier 2002–NE–08–AD.

Comments Due Date

(a) The Federal Aviation Administration (FAA) must receive comments on this airworthiness directive (AD) action by June 7, 2010.

Affected ADs

(b) This AD supersedes AD 2002–16–26, Amendment 39–12865.

Applicability

(c) This airworthiness directive (AD) is applicable to Bombardier-Rotax GmbH type 912 F series, 912 S series, and 914 F series reciprocating engines that have a crankcase serial-numbered 27811 or lower, installed. These engines are installed on, but not limited to, Aeromot-Industria Mecanico Metalurgica Itda AMT–300; Aquila Technische Entwiklugen GmbH AQUILA AT01; Diamond Aircraft Industries DA–20A1, Diamond Aircraft Industries GmbH Models HK36TC, HK36TTC, HK36TTC–ECO, and HK36TTS; Iniziative Industriali Italiane S.p.A. Sky Arrow 650 series; SCHEIBE–Flugzeugnau GmbH SF 25C; and Stemme S10–VT aircraft.

Unsafe Condition

(d) This AD results from an increase in the affected engine crankcase population. We are issuing this AD to prevent oil loss caused by cracks in the engine crankcase, which could lead to in-flight failure of the engine and forced landing.

Compliance

(e) You are responsible for having the actions required by this AD performed within the compliance times specified, unless the actions have already been done.

Determining the Crankcase Serial Number (S/N)

(f) Determine if your crankcase is affected by looking at the S/N in the area indicated by XXX, following "Made in Austria," as shown on Figure 2 of this AD. The marking is on both crankcase halves.

Initial Inspection

(g) Within 50 hours time-in-service (TIS) from the effective date of this AD, perform a visual inspection as follows:

(1) Inspect the engine crankcase (item 1, Figure 1 of this AD) for cracks, especially in the area of cylinder 1 upper side (item 2), between cylinder 1 and 3 upper side (item 3), cylinder 4 lower-right side (item 4) and detailed inspection in the area identified in Figure 2 (item 5) of this AD. Information concerning this inspection can be found in Bombardier-Rotax Mandatory Service Bulletins No. SB–912–029, Revision 3, dated July 11, 2006 and No. SB–914–018, Revision 3, dated July 11, 2006.

BILLING CODE 4910–13–P

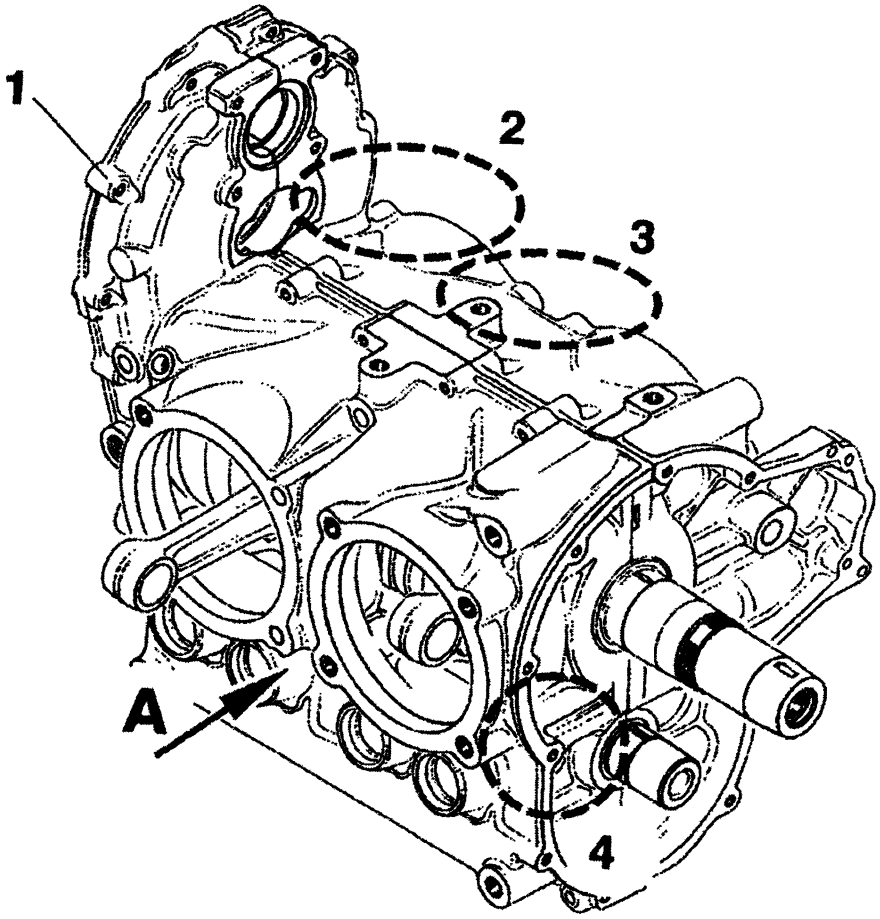

LEGEND

1. Engine Crankcase
2. Cylinder 1 Upper Side
3. Cylinder 3 Upper Side
4. Cylinder 4 Lower-right Side

Figure 1. Engine Crankcase Inspection Areas

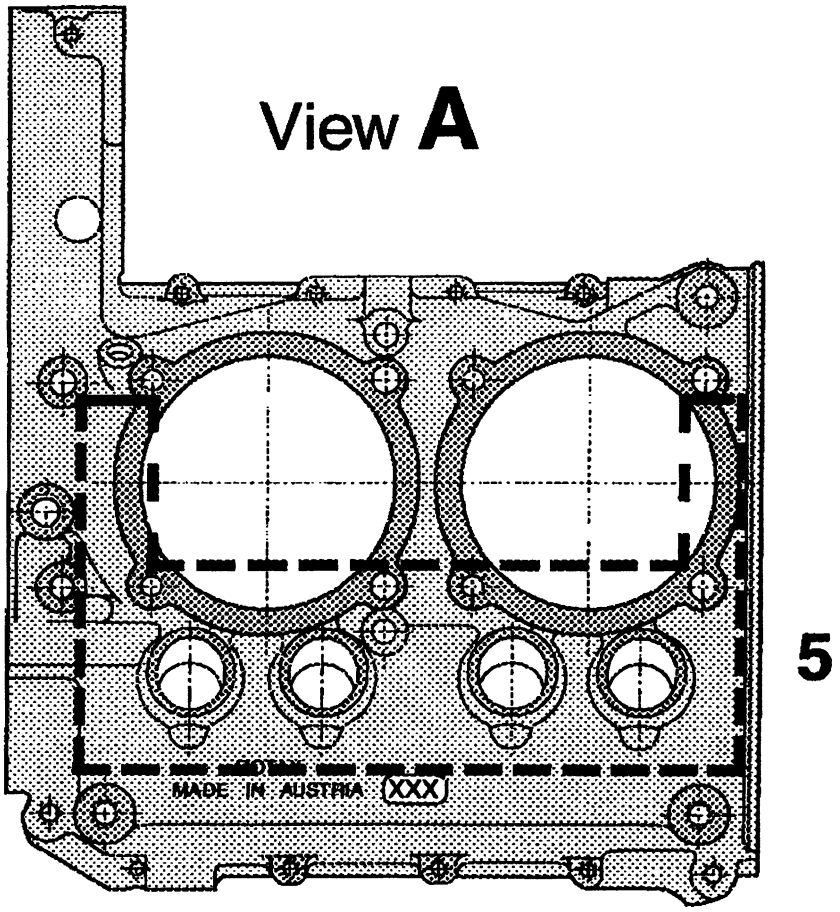

Figure 2. Engine Crankcase Inspection Areas – View A

BILLING CODE 4910–13–C

(2) Cracks in crankcases of engines with a ROTAX cooling air baffle may not be easily visible, and oil leaks may be an indication of cracks. Visually inspect for oil leaks in areas of (item 2, Figure 1 of this AD) and (item 3).

(3) If you find oil leaks, determine the source by either using a borescope or removing the object blocking the view such as the air baffle or accessory, and perform the inspection.

(4) If the engine crankcase is cracked, replace the engine before further flight.

Repetitive Inspections

(h) Visually inspect the engine crankcase (item 1, Figure 1 of this AD) for cracks at each 100-hour, annual, or progressive inspection, or within 110 hours TIS since last inspection, whichever occurs first, in accordance with paragraphs (g)(1) through (g)(4) of this AD.

Alternative Methods of Compliance

(i) The Manager, Engine Certification Office, has the authority to approve alternative methods of compliance for this AD if requested using the procedures found in 14 CFR 39.19.

Special Flight Permits

(j) Under 14 CFR part 39.23, we are limiting the special flight permits for this AD by the following conditions if the crankcase is cracked or there is evidence of oil leakage from the crankcase:

(1) Perform a leak check as follows:

(i) Clean the crankcase surface to remove any oil.

(ii) Warm up the engine to a minimum oil temperature of 50 degrees C (120 degrees F). Information about warming up the engine can be found in the applicable line maintenance manual.

(iii) Accelerate the engine to full throttle and stabilize at full throttle speed for a time period of 5 to 10 seconds. Information about performing a full throttle run can be found in the applicable line maintenance manual.

(iv) Shutdown after running the engine at idle only long enough to prevent vapor locks in the cooling system and fuel system.

(v) Inspect the crankcase for evidence of oil leakage. Oil wetting is permitted, but oil leakage of more than one drip in 3 minutes after engine shutdown is not allowed.

(2) Check the crankcase mean pressure to confirm that it is 1.46 pounds-per-square inch gage (psig) (0.1 bar) or higher when checked at takeoff power to ensure proper return of oil from the crankcase to the oil tank. Information about checking crankcase mean pressure is available in the Lubrication System section of the applicable engine installation manual.

(3) A ferry flight is not allowed if oil leakage exceeds one drip in 3 minutes or if crankcase mean pressure is below 1.46 psig.

Optional Terminating Action

(k) Installing a crankcase that has a S/N above 27811 terminates the inspection requirements of paragraphs (g)(1) through (g)(4) and (h) of this AD.

Related Information

(l) Contact Richard Woldan, Aerospace Engineer, Engine Certification Office, FAA, Engine and Propeller Directorate, 12 New England Executive Park, Burlington, MA 01803; telephone (781) 238–7136; fax (781)

238–7199, for more information about this AD.

(m) EASA airworthiness directive 2007–0025, dated February 1, 2007, also addresses the subject of this AD.

(n) Bombardier-Rotax Mandatory Service Bulletins No. SB–912–029, Revision 3, dated July 11, 2006 and No. SB–914–018, Revision 3, dated July 11, 2006, pertain to the subject of this AD. Contact BRP–Rotax GmbH & Co. KG, Welser Strasse 32, A–4623 Gunskirchen, Austria, or go to rotax-aircraft-engines.com for a copy of this service information.

Issued in Burlington, Massachusetts, on April 1, 2010.

Peter A. White,

Assistant Manager, Engine and Propeller Directorate, Aircraft Certification Service.

[FR Doc. 2010–7831 Filed 4–6–10; 8:45 am]

BILLING CODE 4910–13–P

DEPARTMENT OF TRANSPORTATION

Federal Aviation Administration

14 CFR Part 71

[Docket No. FAA–2010–0085; Airspace Docket No. 10–ACE–1]

Proposed Amendment of Class E Airspace; Cherokee, IA

AGENCY: Federal Aviation Administration (FAA), DOT.

ACTION: Notice of proposed rulemaking (NPRM).

SUMMARY: This action proposes to amend Class E airspace at Cherokee, IA. Decommissioning of the Pilot Rock non-directional beacon (NDB) at Cherokee County Regional Airport has made this action necessary for the safety and management of Instrument Flight Rules (IFR) operations at the airport.

DATES: Comments must be received on or before May 24, 2010.

ADDRESSES: Send comments on this proposal to the U.S. Department of Transportation, Docket Operations, 1200 New Jersey Avenue, SE., West Building, Ground Floor, Room W12–140, Washington, DC 20590–0001. You must identify the docket number FAA–2010–0085/Airspace Docket No. 10–ACE–1, at the beginning of your comments. You may also submit comments through the Internet at *http://www.regulations.gov.* You may review the public docket containing the proposal, any comments received, and any final disposition in person in the Dockets Office between 9 a.m. and 5 p.m., Monday through Friday, except Federal holidays. The Docket Office (telephone 1–800–647–5527), is on the ground floor of the building at the above address.

FOR FURTHER INFORMATION CONTACT: Scott Enander, Central Service Center, Operations Support Group, Federal Aviation Administration, Southwest Region, 2601 Meacham Blvd., Fort Worth, TX 76137; telephone: (817) 321–7716.

SUPPLEMENTARY INFORMATION:

Comments Invited

Interested parties are invited to participate in this proposed rulemaking by submitting such written data, views, or arguments, as they may desire. Comments that provide the factual basis supporting the views and suggestions presented are particularly helpful in developing reasoned regulatory decisions on the proposal. Comments are specifically invited on the overall regulatory, aeronautical, economic, environmental, and energy-related aspects of the proposal. Communications should identify both docket numbers and be submitted in triplicate to the address listed above. Commenters wishing the FAA to acknowledge receipt of their comments on this notice must submit with those comments a self-addressed, stamped postcard on which the following statement is made: "Comments to Docket No. FAA–2010–0085/Airspace Docket No. 10–ACE–1." The postcard will be date/time stamped and returned to the commenter.

Availability of NPRMs

An electronic copy of this document may be downloaded through the Internet at *http://www.regulations.gov.* Recently published rulemaking documents can also be accessed through the FAA's Web page at *http://www.faa.gov/airports_airtraffic/air_traffic/publications/airspace amendments/.*

Additionally, any person may obtain a copy of this notice by submitting a request to the Federal Aviation Administration (FAA), Office of Air Traffic Airspace Management, ATA–400, 800 Independence Avenue, SW., Washington, DC 20591, or by calling (202) 267–8783. Communications must identify both docket numbers for this notice. Persons interested in being placed on a mailing list for future NPRM's should contact the FAA's Office of Rulemaking (202) 267–9677, to request a copy of Advisory Circular No. 11–2A, Notice of Proposed Rulemaking Distribution System, which describes the application procedure.

The Proposal

This action proposes to amend Title 14, Code of Federal Regulations (14 CFR), Part 71, by amending Class E airspace extending upward from 700 feet above the surface for standard instrument approach procedures at Cherokee County Regional Airport, Cherokee, IA. Airspace reconfiguration is necessary due to the decommissioning of the Pilot Rock NDB and the cancellation of the NDB approach. Adjustment to the geographic coordinates would be made in accordance with the FAAs National Aeronautical Charting Office. Controlled airspace is needed for the safety and management of IFR operations at the airport.

Class E airspace areas are published in Paragraph 6005 of FAA Order 7400.9T, dated August 27, 2009, and effective September 15, 2009, which is incorporated by reference in 14 CFR 71.1. The Class E airspace designation listed in this document would be published subsequently in the Order.

The FAA has determined that this proposed regulation only involves an established body of technical regulations for which frequent and routine amendments are necessary to keep them operationally current. It, therefore, (1) is not a "significant regulatory action" under Executive Order 12866; (2) is not a "significant rule" under DOT Regulatory Policies and Procedures (44 FR 11034; February 26, 1979); and (3) does not warrant preparation of a Regulatory Evaluation as the anticipated impact is so minimal. Since this is a routine matter that will only affect air traffic procedures and air navigation, it is certified that this rule, when promulgated, will not have a significant economic impact on a substantial number of small entities under the criteria of the Regulatory Flexibility Act.

The FAA's authority to issue rules regarding aviation safety is found in Title 49 of the U.S. Code. Subtitle I, Section 106, describes the authority of the FAA Administrator. Subtitle VII, Aviation Programs, describes in more detail the scope of the agency's authority. This rulemaking is promulgated under the authority described in Subtitle VII, Part A, Subpart I, Section 40103. Under that section, the FAA is charged with prescribing regulations to assign the use of airspace necessary to ensure the safety of aircraft and the efficient use of airspace. This regulation is within the scope of that authority as it would amend controlled airspace at Cherokee County Regional Airport, Cherokee, IA.

List of Subjects in 14 CFR Part 71

Airspace, Incorporation by reference, Navigation (Air).

The Proposed Amendment

In consideration of the foregoing, the Federal Aviation Administration proposes to amend 14 CFR Part 71 as follows:

PART 71—DESIGNATION OF CLASS A, B, C, D, AND E AIRSPACE AREAS; AIR TRAFFIC SERVICE ROUTES; AND REPORTING POINTS

1. The authority citation for Part 71 continues to read as follows:

Authority: 49 U.S.C. 106(g); 40103, 40113, 40120; E.O. 10854, 24 FR 9565, 3 CFR, 1959–1963 Comp., p. 389.

§ 71.1 [Amended]

2. The incorporation by reference in 14 CFR 71.1 of FAA Order 7400.9T, Airspace Designations and Reporting Points, signed August 27, 2009, and effective September 15, 2009, is amended as follows:

Paragraph 6005 Class E Airspace areas extending upward from 700 feet or more above the surface of the earth.

* * * * *

ACE IA E5 Cherokee, IA [Amended]

Cherokee County Regional Airport, IA
(Lat. 42°43′52″ N., long. 95°33′22″ W.)

That airspace extending upward from 700 feet above the surface within a 6.4-mile radius of Cherokee County Regional Airport.

Issued in Fort Worth, TX on March 29, 2010.

Walter L. Tweedy,

Acting Manager, Operations Support Group, ATO Central Service Center.

[FR Doc. 2010–7789 Filed 4–6–10; 8:45 am]

BILLING CODE 4901–13–P

NATIONAL ARCHIVES AND RECORDS ADMINISTRATION

36 CFR Part 1206

[FDMS Docket NARA–10–0001]

RIN 3095–AB67

National Historical Publications and Records Commission; Proposal To Amend Regulations

AGENCY: National Historical Publications and Records Commission, NARA.

ACTION: Proposed rule.

SUMMARY: The National Historical Publications and Records Commission (NHPRC), National Archives and Records Administration (NARA), is proposing to amend its regulations by removing individual eligibility for NHPRC grants, changing the time for posting of grant opportunity announcements from four to three months before the application deadline, and reflecting the new Office of Management and Budget (OMB) requirement to use Standard Form (SF) 425, Federal Financial Report. These actions are necessary updates to our business processes and are intended to allow us greater flexibility to respond to changing needs and a simplified financial reporting form and process. This proposal also adjusts the order and format of the definitions section for consistency with other NARA regulations, and makes minor typographical changes for clarity and consistency.

DATES: Submit comments on or before June 7, 2010.

ADDRESSES: You may submit comments, identified by RIN 3095–AB67, by any of the following methods:

- *Federal eRulemaking Portal: http://www.regulations.gov.* Follow the instructions for submitting comments.
- *E-mail* (*laura.mccarthy@nara.gov.* Include RIN 3095–AB67 in the subject line of the message.
- *Mail:* The National and Archives Records Administration; Policy and Planning Office; ATTN: Laura McCarthy; Room 4100, 8601 Adelphi Road, College Park, MD 20740 (For paper, disk, or CD–ROM submissions. Include RIN 3095–AB67 on the submission).

Instructions: All submissions received must include the agency name and Regulatory Information Number (RIN) for this rulemaking. All comments received may be published without changes, including any personal information provided.

FOR FURTHER INFORMATION CONTACT: Lucy Barber, Deputy Executive Director, National Historical Publications and Records Commission, National Archives and Records Administration, 700 Pennsylvania Avenue, NW., Room 106, Washington, DC 20408–0001, 202–357–5306.

SUPPLEMENTARY INFORMATION: The National Historical Publications and Records Commission (NHPRC) is the grantmaking arm of the National Archives and Records Administration (NARA). The NHPRC extends the National Archives mission to preserve and make accessible the nation's most important historical records by providing grants assistance to State/local governments and nonprofit institutions as they carry out such preservation and access work. The Commission is the sole Federal granting entity in the nation whose exclusive focus is on preservation of and increased access to the nation's historical records.

In an effort to improve our program mission, we are removing individuals from eligibility. We have found it is more effective for eligible institutions to offer professional opportunities and manage Federally-funded grant projects than for the NHPRC to award grants to individuals directly. We believe this action will make it less confusing and time consuming to those individuals searching for grant opportunities. Currently, we have only one program, Publishing Historical Records, in which individuals are eligible to apply. The last successful application from an individual in this area was in 2003. We have not received any eligible applications since then. Because of this, we feel that our customers recognize that they need institutional support to successfully complete such projects. The term "individuals" has been removed from §§ 1206.4, 1206.40, and 1206.54.

For our grant opportunity announcements, changing the posting time from four months to three months before the application deadline will give us greater flexibility to respond to changing needs, allowing us to offer better opportunities to our applicants. The change in the financial reporting form was required by the Office of Management and Budget, and is intended to make reporting easier for all Federal grantees.

The other revisions to the current regulations, adjustments to the order and format of the definitions section for consistency with other NARA regulations and minor typographical changes, are proposed for clarity and consistency in format with other NARA regulations.

This proposed amendment is not a significant regulatory action for the purposes of E.O. 12866. The proposed amendment is also not a major rule as defined in 5 U.S.C. Chapter 8, Congressional Review of Agency Rulemaking. As required by the Regulatory Flexibility Act, it is hereby certified that this proposed rule will not have a significant impact on small entities.

List of Subjects in 36 CFR Part 1206

Archives and records, Grant programs—education, Reporting and recordkeeping requirements.

For the reasons stated in the preamble, NARA proposes to amend Title 36 of the Code of Federal Regulations, Part 1206, as follows:

PART 1206—NATIONAL HISTORICAL PUBLICATIONS AND RECORDS COMMISSION

1. The authority citation for part 1206 continues to read as follows:

Authority: 44 U.S.C. 2104(a); 44 U.S.C. 2501–2506.

Source: 71 FR 27624, May 12, 2006, unless otherwise noted.

Subpart A—[Amended]

§ 1206.1 [Removed]

2. Section 1206.1 is removed.

§ 1206.2 [Redesignated as § 1206.1]

3. Redesignate § 1206.2 as § 1206.1.

4. Revise § 1206.3 to read as follows:

§ 1206.3 What definitions apply to the regulations in Part 1206?

As used in Part 1206:

Board refers to a State historical records advisory board.

Commission (*see* NHPRC).

Coordinator means the coordinator of a State historical records advisory board.

Cost sharing means the financial contribution the applicant pledges toward the total cost of a project. Cost sharing can include both direct and indirect expenses, contributions provided by the applicant or by third parties as in-kind or cash contributions, and any income earned directly by the project.

Direct costs means expenses that are attributable directly to the cost of a project, such as salaries, project supplies, travel expenses, equipment rented or purchased for the project, or services procured for the project.

Grant opportunity announcement refers to a document published on the NHPRC Web site and at *http://www.grants.gov* that describes a type of grant offered, eligibility requirements, and application instructions.

Guidance refers to a non-binding document published on the NHPRC Web site to clarify or explain Commission policy or to provide procedural details.

Historical records means documentary material having permanent or enduring value, including manuscripts, personal papers, official records, maps, audiovisual materials, and electronic files.

Historical records repository means organizations whose mission is to acquire, preserve, and promote the use of historical records. They include archives, special collections, museums, and historical societies.

Indirect costs means costs incurred for common or joint objectives of an applicant's organization and therefore not attributable to a specific project or activity. Typically, indirect costs include items such as overhead for facilities maintenance and accounting services.

NHPRC means members of the National Historical Publications and Records Commission acting as a body.

NHPRC staff refers to the Executive Director and the staff of the Commission or the Executive Director of the Commission.

State, in §§ 1206.40 through 1206.42, means all 50 States of the Union, plus the District of Columbia, Puerto Rico, the U.S. Virgin Islands, Guam, American Samoa, and the Commonwealth of the Northern Mariana Islands.

The Manual of Suggested Practices refers to "The Manual of Suggested Practices for State Historical Records Advisory Boards." It is a type of guidance.

5. Revise § 1206.4 to read as follows:

§ 1206.4 What is the purpose of the Commission?

The National Historical Publications and Records Commission (NHPRC or Commission), a statutory body affiliated with the National Archives and Records Administration (NARA), supports a wide range of activities to preserve, publish, and encourage the use of primary documentary sources. Through the NHPRC's grant programs, training programs, and special projects, the Commission offers advice and assistance to State and local government agencies, non-Federal nonprofit organizations and institutions, and Federally-acknowledged or State-recognized Native American Tribes or groups committed to the preservation, publication, or use of United States documentary resources.

6. Amend § 1206.8 by revising paragraphs (b), (d) and (e) to read as follows:

§ 1206.8 How do you operate the grant program?

* * * * *

(b) The Commission establishes grant program priorities as reflected in its grant opportunity announcements and, from time-to-time, issues non-binding, clarifying guidance documents through the NHPRC Web site.

* * * * *

(d) The purpose and work plan of all NHPRC-funded grant projects must be in accord with current Commission program guidance as reflected in the grant opportunity announcements.

(e) The Commission makes funding recommendations to the Archivist of the United States, who has the authority to award grants.

7. Amend § 1206.10 by revising paragraphs (b) and (c) to read as follows:

§ 1206.10 How do you make grant opportunities known?

* * * * *

(b) The NHPRC staff prepares grant opportunity announcements consisting of all information necessary to apply for each grant and publishes the announcements on the NHPRC Web site (*http://www.archives.gov/nhprc*) at least three months before the final application due date.

(c) The NHPRC staff publishes notice of each announcement on *http://www.grants.gov,* a Federal government Web site widely available to the public, at least three months before the final application due date.

8. Amend § 1206.12 by revising paragraph (a) to read as follows:

§ 1206.12 What are my responsibilities once I have received a grant?

(a) Comply with all Federal regulations about grants administration that are contained in § 1206.72.

* * * * *

Subpart B—[Amended]

9. Amend § 1206.24 by revising paragraph (a) introductory text to read as follows:

§ 1206.24 What type of proposal is ineligible for a publications grant?

(a) The Commission does not support:

* * * * *

Subpart C—[Amended]

10. Amend § 1206.32 by revising paragraphs (a) and (b) introductory text to read as follows:

§ 1206.32 What type of proposal is eligible for a records grant?

(a) The Commission provides grants to historical records repositories for locating, preserving and encouraging use of records held by State, local, and other governmental units and private archives and collections of papers maintained in non-Federal, nonprofit repositories and special collections relating to the study of American history.

(b) The Commission provides support to historical records repositories and other institutions for:

* * * * *

11. Amend § 1206.34 by revising the introductory text to read as follows:

§ 1206.34 What type of proposal is ineligible for a records grant?

In addition to other programmatic limitations established by the Commission as found in the grant opportunity announcements, NHPRC does not support proposals:

* * * * *

Subpart D—[Amended]

12. Amend § 1206.40 by revising paragraph (a) to read as follows:

§ 1206.40 What is a State records program?

(a) Each State is eligible to receive NHPRC grants to support the work of the State historical records advisory board (board); to operate statewide historical records services; and to make sub-grants to eligible organizations within the State in support of historical records activities.

* * * * *

13. Amend § 1206.41 by revising paragraph (a) and the first and last sentences of paragraph (b) as follows:

§ 1206.41 What is a State historical records advisory board and how is it constituted?

(a) *Responsibilities.* The board is the central advisory body for historical records coordination within the State and for NHPRC State and local records projects within the State. The board engages in planning; it develops, revises, and submits to the Commission a State plan including priorities for State historical records projects following "The Manual of Suggested Practices." The board reviews all State and local records projects within the State and makes recommendations for State projects to the Commission.

(b) * * * Each State participating in the NHPRC State program must adopt an appointment process and appoint a board following "The Manual of Suggested Practices." * * * The board should be as broadly representative as possible of the public and private archives, records offices, and research institutions and organizations in the State.

14. Amend § 1206.42 by revising paragraph (a), the first two sentences of paragraph (b), and paragraph (c) to read as follows:

§ 1206.42 What is a State coordinator?

(a) *Duties.* The State coordinator (coordinator) is the officer responsible for the NHPRC State program. He or she reports the State board appointment process, membership and recommendations to the NHPRC at least on an annual basis and may serve as chair of the board and may perform other duties following applicable State statute or regulation and "The Manual of Suggested Practices."

(b) * * * The coordinator should be the full-time professional official in charge of the State archival program or agency, unless otherwise specified in State statute or regulation. The coordinator serves *ex officio,* unless otherwise specified in State statute or regulation. * * *

(c) *Replacement.* In the absence of a deputy coordinator, the State board may select an acting coordinator until another coordinator is appointed, in order to conduct the necessary business of the board.

§ 1206.43 [Amended]

15. Amend § 1206.43 by capitalizing the "S" in the word "State" in the heading and in the text.

16. Revise § 1206.44 to read as follows:

§ 1206.44 Who is eligible for sub-grants?

All organizations located within a State that has an active State historical records board and entities defined in § 1206.54 may be eligible, as determined by the board.

17. Amend § 1206.45 by revising the heading and paragraphs (a)(1), (b), and (c) to read follows:

§ 1206.45 What rules govern sub-grant distribution, cost sharing, grant administration, and reporting?

(a) * * *

(1) The distribution of re-grant funds;

* * * * *

(b) Each participating State is responsible for ensuring that the sub-grantees comply with Federal grant administration and reporting requirements.

(c) Each participating State must annually prepare a report to the NHPRC on its sub-grant program, following the requirements outlined in § 1206.80.

Subpart E—[Amended]

18. Amend § 1206.50 by revising the first two sentences of paragraph (a)(1) and the first sentence of paragraph (a)(2) to read as follows:

§ 1206.50 What types of funding and cost sharing arrangements does the Commission make?

(a) * * * (1) * * * A matching grant is a Federal grant awarded only after the applicant raises its share of non-Federal support for a project. We will match only funds raised from non-Federal sources, either monies provided by the applicant's own institution specifically for the project or from a non-Federal third-party source. * * *

(2) * * * However, outright grants usually include a cost sharing requirement. * * *

* * * * *

§ 1206.52 [Amended]

19. Amend § 1206.52 by removing the words "We describe" and adding in thir place the words "The Commission describes."

20. Revise § 1206.54 to read as follows:

§ 1206.54 Who may apply for NHPRC grants?

The Commission will consider applications from State government agencies in States where there is an active board; local government agencies; United States nonprofit organizations and institutions, including institutions of higher education; or Federally-acknowledged and State-recognized American Indian Tribes or groups.

21. Revise § 1206.56 to read as follows:

§ 1206.56 When are applications due?

The Commission generally meets twice a year, and considers grant proposals submitted by the deadlines set by the Commission. The deadlines are published in each grant opportunity announcement and at *http://www.grants.gov.* All proposals must be submitted by the published deadline.

22. Amend § 1206.58 by revising paragraphs (a), (b) introductory text, (b)(1)(i), (b)(1)(ii), and (b)(2), and by removing paragraphs (b)(1)(iii) and (b)(3) to read as follows:

§ 1206.58 Whom may I contact about applying for a grant?

(a) *Contact the NHPRC staff.* The Commission encourages you to discuss your proposal through correspondence, by phone, or in person with NHPRC staff.

(b) *Contact your State Historical Records Advisory Board as appropriate.* NHPRC encourages you to discuss your proposal with your State historical records coordinator at all stages of your proposal's development and before you submit the proposal.

(1) * * *

(i) Your proposal is for publications or subvention projects; or

(ii) You are an American Indian Tribe.

* * * * *

(2) You will find the staff contacts and a list of State historical records coordinators on the Commission's Web site at *http://www.archives.gov/nhprc.*

§ 1206.60 [Amended]

23. Amend § 1206.60 by removing the word "Web" and adding in its place the word "Web".

24. Revise § 1206.64(a) to read as follows:

§ 1206.64 What formal notification will I receive, and will it contain other information?

(a) Successful grant applicants will receive a formal grant award document. The document and attachments specify terms of the grant. NHPRC staff notifies project directors informally of awards and any conditions soon after the Archivist approves the grants.

* * * * *

Subpart F—[Amended]

§ 1206.70 [Amended]

25. Amend § 1206.70 by removing the second sentence.

26. Amend § 1206.72 by revising paragraph (a) to read as follows:

§ 1206.72 What are, and where can I find, the regulatory requirements that apply to NHPRC grants?

(a) In addition to this Part 1206, NARA has issued other regulations that apply to NHPRC grants in 36 CFR Parts 1200 to 1212 and 2 CFR Part 2600. NARA also applies the principles and standards in the following regulations and Office of Management and Budget (OMB) Circular for NHPRC grants:

(1) 2 CFR Part 220 Cost Principles for Educational Institutions (OMB Circular A–21);

(2) 2 CFR Part 225 Cost Principles for State, Local, And Indian Tribal Governments (OMB Circular A–87);

(3) 2 CFR Part 230 Cost Principles for Non-Profit Organizations (OMB Circular A–122); and

(4) OMB Circular A–133, "Audits of States, Local Governments, and Nonprofit Organizations." This circular is available at *http://www.whitehouse.gov/omb/circulars_default.*

* * * * *

§ 1206.74 [Amended]

27. Amend § 1206.74 by removing the word "Commission" and by adding "NHPRC" in its place.

28. Revise § 1206.76 to read as follows:

§ 1206.76 May I receive an extension to my grant project?

Yes, requests for extensions of the grant period should be signed by the grantee's authorized representative and submitted not more than two months before the scheduled end of the grant period. The NHPRC will not allow extensions unless a project is up-to-date in its submission of financial and narrative reports.

§ 1206.80 [Amended]

29. Amend § 1206.80(a) by removing the word "status" from between the words "financial" and "reports."

30. Revise § 1206.82 to read as follows:

§ 1206.82 What is the format and content of the financial report?

Grant recipients must submit financial reports on Standard Form 425 and have them signed by the grantee's authorized representative or by an appropriate institutional fiscal officer.

31. Amend § 1206.84 by revising the second sentence of paragraph (a) and removing paragraph (c) to read as follows:

§ 1206.84 What is the format and content of the narrative report? [Amended]

(a) * * * The report should include a summary of project activities; whether the project proceeded on schedule; any revisions of the work plan, staffing pattern, or budget; any Web address created by the project; and any other press releases, articles, or presentations relating to the grant project or its products. * * *

* * * * *

32. Revise § 1206.86 to read as follows:

§ 1206.86 What additional materials must I submit with the final narrative report?

You must submit the materials required in the NHPRC grant announcements and in the grant award document.

33. Amend § 1206.88 by removing the phrase "the National Archives and Records Administration (NARA)" and by adding "NARA" in its place.

Dated: March 31, 2010.

David S. Ferriero,

Archivist of the United States.

[FR Doc. 2010–7779 Filed 4–6–10; 8:45 am]

BILLING CODE 7515–01–P

DEPARTMENT OF VETERANS AFFAIRS

38 CFR Parts 17 and 59

RIN 2900–AN57

Updating Fire Safety Standards

AGENCY: Department of Veterans Affairs.

ACTION: Proposed rule.

SUMMARY: The Department of Veterans Affairs (VA) proposes to amend its regulations concerning community residential care facilities, contract facilities for certain outpatient and residential services, and State home facilities to update the standards for VA approval of such facilities, including standards for fire safety and heating and cooling systems. The proposed amendments would help ensure the safety of veterans in the affected facilities.

DATES: Comments on the proposed rule must be received by VA on or before June 7, 2010.

ADDRESSES: Written comments may be submitted through *http://www.regulations.gov;* by mail or hand-delivery to the Director, Regulations Management (02REG), Department of Veterans Affairs, 810 Vermont Avenue, NW., Room 1068, Washington, DC 20420; or by fax to (202) 273–9026. Comments should indicate that they are submitted in response to "RIN 2900–AN57—Updating Fire Safety Standards." Copies of comments received will be available for public inspection in the Office of Regulation Policy and Management, Room 1063B, between the hours of 8 a.m. and 4:30 p.m. Monday through Friday (except holidays). Please call (202) 461–4902 for an appointment. (This is not a toll-free number.) In addition, during the comment period, comments may be viewed online through the Federal Docket Management System (FDMS) at *http://www.regulations.gov.*

FOR FURTHER INFORMATION CONTACT: Brian McCarthy, Office of Patient Care Services, Veterans Health Administration, Department of Veterans Affairs, 810 Vermont Ave., NW., Washington, DC 20420, 202–461–6759. (This is not a toll-free number.)

SUPPLEMENTARY INFORMATION: This document proposes to update VA's regulations concerning the codes and standards applicable to community residential care facilities, contract facilities for outpatient and residential treatment services for veterans with alcohol or drug dependence or abuse disabilities, and State homes. Currently, 38 CFR 17.63(a)(2), 17.81(a)(1), 17.82(a)(1), and 59.130(d)(1) require facilities to meet the requirements in certain provisions of specific editions of publications produced by the National Fire Protection Association (NFPA). These publications are: NFPA 10, Standard for Portable Fire Extinguishers; NFPA 99, Standard for Health Care Facilities; NFPA 101, Life Safety Code; and NFPA 101A, Guide on Alternative Approaches to Life Safety. These publications are currently incorporated by reference into §§ 17.63, 17.81, 17.82, and 59.130. However, these sections need to be updated to reflect the current editions of these publications. In addition, specific chapters of NFPA 101 that are cited in

the regulations might not apply to all facilities within the programs. The regulations that cite these chapters need to be broadened to address all facilities.

Changes to 38 CFR Part 17

We propose to amend §§ 17.63, 17.81, and 17.82 to refer to the 2009 edition of NFPA 101 and the 2010 edition of NFPA 101A, which are the current editions of these publications.

These regulations currently cite specific chapters of NFPA publications. For example, § 17.81(a)(1)(i) cites chapters 1–7, 22–23, and 31, and Appendix A of the 1994 edition of NFPA 101. This can be problematic if a cited chapter was intended by NFPA to apply only to facilities of a specific type or size, e.g., a residential board and care facility for four or more residents, but the VA regulation addresses facilities of varying types or sizes. Reference to a specific chapter has led to confusion as to whether VA requires smaller facilities to meet the requirements in a chapter that NFPA intended only to apply to larger facilities, or vice-versa. For example, the occupancy chapters (chapters 22–23 of NFPA 101) cited in current § 17.81(a)(1)(i) were not intended by NFPA to apply to a facility that serves fewer than four residents, but VA recognizes facilities of such size in contracts for certain residential services. The result has been confusion as to whether the regulation requires those NFPA occupancy chapters to apply to such small facilities. VA intends to apply the NFPA occupancy chapters in the manner intended by NFPA. Where VA has additional requirements, these requirements need to be identified in the regulations.

This type of confusion has not been an issue for facilities covered by 38 CFR part 59, largely because in current § 59.130(d)(1) we require facilities to "meet the applicable provisions of" NFPA 101. Hence, we propose to amend part 17 to conform to the more general and less ambiguous reference format used in part 59. This is not intended to be a substantive change and should not create new responsibilities for any facilities covered by part 17.

In addition, some of our regulations reference specific standards that are subsumed by NFPA 101. For example, current § 17.82(a)(1)(v) references NFPA 10, a specific standard related to fire extinguishers. However, NFPA provides specific standards for many other items related to fire safety, but our regulations do not reference them. This has led to confusion as to whether we intended to exclude those specific standards we do not reference in our regulations. This was not our intent. NFPA 101 contains a chapter that lists other publications and states that those publications shall be considered part of the requirements of NFPA 101. Hence, by incorporating by reference NFPA 101, we would also be incorporating the standards NFPA 101 relies upon and references.

Specific NFPA 101 provisions would lead the user to relevant specific standards. Again using the example of § 17.82(a)(1)(v)'s current reference to NFPA 10, proposed § 17.81(a)(1)(i) would require the regulated facilities "to meet the requirements in the applicable provisions of" NFPA 101, which would include chapters 7 and 23 of NFPA 101. NFPA 101 section 23–3.3.5.3, "Portable Fire Extinguishers," states that "Portable fire extinguishers in accordance with 7–7.4.1 shall be provided near hazardous areas." NFPA 101 section 7–7.4, "Manual Extinguishing Equipment," states that "[w]here required by the provisions of another section of this Code, portable fire extinguishers shall be installed, inspected, and maintained in accordance with NFPA 10." Thus, merely requiring compliance with NFPA 101 would lead the user to the appropriate specific published standards. We note as well that the reference to a specific standard, such as NFPA 10, or a specific provision of NFPA 101 is necessary only if the applicable occupancy chapter in NFPA 101 does not reference it. Thus, the reference to NFPA 10 would be added to § 17.63 and remain for § 17.81 only for facilities that have fewer than four residents, and would be removed from § 17.82.

In order to clarify the applicability in part 17 of all standards that are required by NFPA 101, we would state in our regulatory references to NFPA 101 that we require regulated facilities to meet the requirements in the applicable provisions of NFPA 101 and the other publications referenced in those provisions. This is not intended to be a substantive change and would not lead to stricter regulatory enforcement. It would merely clarify our regulation.

Finally, we would continue to reference specifically NFPA 101A in proposed § 17.63 because NFPA 101A provides alternative approaches to the requirements in NFPA 101. In practice, most facilities being inspected would not utilize the alternatives in NFPA 101A; however, we believe in some cases it would provide useful and viable alternatives.

Changes to 38 CFR Part 59

We propose to amend § 59.130 to refer to the 2005 edition of NFPA 99 and the 2009 edition of NFPA 101, which are the current editions of these documents. This update is necessary to ensure that State home facilities meet current industry-wide standards regarding fire safety. With respect to State homes, we are not aware of any significant changes from the editions referenced in current § 59.130 to the 2005 edition of NFPA 99 and the 2009 edition of NFPA 101.

Approval of Incorporations by Reference

The Office of the Federal Register, in accordance with 5 U.S.C. 552(a) and 1 CFR part 51, approved our incorporation by reference of previous editions of NFPA 99, 101, 101A into current regulations. We propose to amend our regulations to require facilities seeking VA approval to meet the applicable requirements of NFPA 99, Standard for Health Care Facilities (2005 edition); NFPA 101, Life Safety Code (2009 edition); and NFPA 101A, Guide on Alternative Approaches to Life Safety (2010 edition). These changes merely reflect updates to the standards that are currently incorporated by reference. This action is necessary to ensure that facilities meet current industry-wide standards regarding fire safety. We are not aware of any significant changes from the previous editions to the current editions. We will request that the Office of the Federal Register approve our incorporation by reference of updated NFPA 99, 101, and 101A.

These materials for which we are seeking incorporation by reference are available for inspection at the Department of Veterans Affairs, Office of Regulation Policy and Management (02REG), 810 Vermont Avenue, NW., Room 1063B, Washington, DC 20420. Please call (202) 461–4902 for an appointment. (This is not a toll-free number.) These materials are also available at the National Archives and Records Administration (NARA). For information on the availability of this material at NARA, call (202) 741–6030, or go to: *http://www.archives.gov/federal_register/code_of_federal_regulations/ibr_locations.html.* Copies may be obtained from the National Fire Protection Association, 1 Batterymarch Park, Quincy, MA 02269. (For ordering information, call toll-free 1–800–344–3555.)

Unfunded Mandates

The Unfunded Mandates Reform Act of 1995 requires, at 2 U.S.C. 1532, that agencies prepare an assessment of anticipated costs and benefits before issuing any rule that may result in an expenditure by State, local, and Tribal governments, in the aggregate, or by the

private sector, of $100 million or more (adjusted annually for inflation) in any given year. This rule would have no such effect on State, local, and Tribal governments, or on the private sector.

Paperwork Reduction Act

This document contains no collections of information under the Paperwork Reduction Act of 1995 (44 U.S.C. 3501–3521).

Executive Order 12866

Executive Order 12866 directs agencies to assess all costs and benefits of available regulatory alternatives and, when regulation is necessary, to select regulatory approaches that maximize net benefits (including potential economic, environmental, public health and safety, and other advantages; distributive impacts; and equity). The Executive Order classifies a "significant regulatory action," requiring review by the Office of Management and Budget as any regulatory action that is likely to result in a rule that may: (1) Have an annual effect on the economy of $100 million or more, or adversely affect in a material way the economy, a sector of the economy, productivity, competition, jobs, the environment, public health or safety, or State, local, or Tribal governments or communities; (2) create a serious inconsistency or otherwise interfere with an action planned or taken by another agency; (3) materially alter the budgetary impact of entitlements, grants, user fees, or loan programs or the rights and obligations of recipients thereof; or (4) raise novel legal or policy issues arising out of legal mandates, the President's priorities, or the principles set forth in the Executive Order.

The economic, interagency, budgetary, legal, and policy implications of this proposed rule have been examined, and it has been determined not to be a significant regulatory action under Executive Order 12866.

Regulatory Flexibility Act

The Secretary hereby certifies that this proposed rule would not have a significant economic impact on a substantial number of small entities as they are defined in the Regulatory Flexibility Act, 5 U.S.C. 601–612. In addition to having an effect on individuals (veterans), the proposed rule would have an insignificant economic impact on a few small entities. The changes to § 17.63 would likely affect fewer than 100 of the 2,800 community residential care facilities approved for referral of veterans under the regulations. Also, any additional costs for compliance with the proposed rule would constitute an inconsequential amount of the operational costs of such facilities. The changes to §§ 17.81 and 17.82 would affect only small entities; however, most, if not all, of these entities are already in compliance with the current NFPA codes and therefore should not be significantly impacted by this rule. The changes to part 59 would affect State homes. The State homes that would be subject to this rulemaking are State government entities under the control of State governments. All State homes are owned, operated and managed by State governments except for a small number operated by entities under contract with State governments. These contractors are not small entities. Accordingly, pursuant to 5 U.S.C. 605(b), this rule would be exempt from the initial and final regulatory flexibility analysis requirements of sections 603 and 604.

Catalog of Federal Domestic Assistance

The Catalog of Federal Domestic Assistance numbers and titles for the programs affected by this document are 64.005, Grants to States for Construction of State Home Facilities; 64.007, Blind Rehabilitation Centers; 64.008, Veterans Domiciliary Care; 64.009, Veterans Medical Care Benefits; 64.010, Veterans Nursing Home Care; 64.011, Veterans Dental Care; 64.012, Veterans Prescription Service; 64.013, Veterans Prosthetic Appliances; 64.014, Veterans State Domiciliary Care; 64.015, Veterans State Nursing Home Care; 64.016, Veterans State Hospital Care; 64.018, Sharing Specialized Medical Resources; 64.019, Veterans Rehabilitation Alcohol and Drug Dependence; 64.022, Veterans Home Based Primary Care.

Signing Authority

The Secretary of Veterans Affairs, or designee, approved this document and authorized the undersigned to sign and submit the document to the Office of the Federal Register for publication electronically as an official document of the Department of Veterans Affairs. John R. Gingrich, Chief of Staff, Department of Veterans Affairs, approved this document on March 1, 2010 for publication.

List of Subjects in 38 CFR Parts 17 and 59

Administrative practice and procedure, Alcohol abuse, Alcoholism, Claims, Day care, Dental health, Drug abuse, Foreign relations, Government contracts, Grant programs—health, Grant programs—veterans, Health care, Health facilities, Health professions, Health records, Homeless, Medical and dental schools, Medical devices, Medical research, Mental health programs, Nursing homes, Philippines, Reporting and recordkeeping requirements, Scholarships and fellowships, Travel and transportation expenses, Veterans.

Dated: April 1, 2010.

Robert C. McFetridge,

Director, Regulation Policy and Management.

For the reasons set out in the preamble, VA proposes to amend 38 CFR parts 17 and 59 as follows:

PART 17—MEDICAL

1. The authority citation for part 17 continues to read as follows:

Authority: 38 U.S.C. 501, 1721, and as noted in specific sections.

2. Add § 17.1 to part 17 to read as follows:

§ 17.1 Incorporation by reference.

(a) Certain materials are incorporated by reference into this part with the approval of the Director of the Federal Register under 5 U.S.C. 552(a) and 1 CFR part 51. To enforce an edition of a publication other than that specified in this section, VA will publish notice of change in the **Federal Register** and the material will be made available to the public. All approved materials are available for inspection at the Department of Veterans Affairs, Office of Regulation Policy and Management (02REG), 810 Vermont Avenue, NW., Room 1068, Washington, DC 20420, or at the National Archives and Records Administration (NARA). For information on the availability of approved materials at NARA, call (202) 741–6030, or go to: *http://www.archives.gov/federal_register/code_of_federal_regulations/ibr_locations.html.* Copies may be obtained from the National Fire Protection Association, 1 Batterymarch Park, Quincy, MA 02269. (For ordering information, call toll-free 1–800–344–3555.)

(b) The following materials are incorporated by reference into this part.

(1) NFPA 101, Life Safety Code (2009 edition), Incorporation by Reference (IBR) approved for §§ 17.63, 17.81, 17.82.

(2) NFPA 101A, Guide on Alternative Approaches to Life Safety (2010 edition), IBR approved for § 17.63.

Authority: 5 U.S.C. 552(a), 38 U.S.C. 501, 1721.

3. Amend § 17.63 as follows:

a. Revise paragraph (a)(2); and

b. Add a new paragraph (a)(4).

The revision and addition read as follows:

§ 17.63 Approval of community residential care facilities.

* * * * *

(a) * * *

(2) Meet the requirements in the applicable provisions of NFPA 101 and NFPA 101A (incorporated by reference, *see* § 17.1) and the other publications referenced in those provisions. The institution shall provide sufficient staff to assist patients in the event of fire or other emergency. Any equivalencies or variances to VA requirements must be approved by the appropriate Veterans Health Administration Veterans Integrated Service Network (VISN) Director;

* * * * *

(4) Meet the following additional requirements, if the provisions for One and Two-Family Dwellings, as defined in NFPA 101, are applicable to the facility:

(i) Portable fire extinguishers must be installed, inspected, and maintained in accordance with NFPA 10; and

(ii) The facility must meet the requirements in section 33.7 of NFPA 101.

* * * * *

4. Amend § 17.81(a)(1) as follows:

a. Revise paragraph (a)(1)(i);

b. Remove paragraphs (a)(1)(v) through (a)(1)(viii);

c. Add a new paragraph (a)(1)(v); and

d. Redesignate paragraph (a)(1)(ix) as paragraph (a)(1)(vi).

The revision and addition read as follows:

§ 17.81 Contracts for residential treatment services for veterans with alcohol or drug dependence or abuse disabilities.

(a) * * *

(1) * * *

(i) The building must meet the requirements in the applicable provisions of NFPA 101 (incorporated by reference, *see* § 17.1) and the other publications referenced in those provisions. Any equivalencies or variances to VA requirements must be approved by the appropriate Veterans Health Administration Veterans Integrated Service Network (VISN) Director.

* * * * *

(v) The facility must meet the following additional requirements, if the provisions for One and Two-Family Dwellings, as defined in NFPA 101, are applicable to the facility:

(A) Portable fire extinguishers shall be installed, inspected, and maintained in accordance with NFPA 10.

(B) The facility shall meet the requirements in section 33.7 of NFPA 101.

* * * * *

5. Amend § 17.82(a)(1) as follows:

a. Revise paragraph (a)(1)(i) and (iv);

b. Remove paragraphs (a)(1)(v) and (a)(1)(vi); and

c. Redesignate paragraph (a)(1)(vii) as (a)(1)(v).

The revisions read as follows:

§ 17.82 Contracts for outpatient services for veterans with alcohol or drug dependence or abuse disabilities.

(a) * * *

(1) * * *

(i) The building must meet the requirements in the applicable provisions of the NFPA 101 (incorporated by reference, *see* § 17.1) and the other publications referenced in those provisions. Any equivalencies or variances to VA requirements must be approved by the appropriate Veterans Health Administration Veterans Integrated Service Network (VISN) Director.

* * * * *

(iv) As a minimum, fire exit drills must be held at least quarterly, and a written plan for evacuation in the event of fire shall be developed and reviewed annually. The plan shall outline the duties, responsibilities and actions to be taken by the staff in the event of a fire emergency. This plan shall be implemented during fire exit drills.

* * * * *

PART 59—GRANTS TO STATES FOR CONSTRUCTION OR ACQUISITION OF STATE HOMES

6. The authority citation for part 59 continues to read as follows:

Authority: 38 U.S.C. 101, 501, 1710, 1742, 8105, 8131–8137.

§ 59.130 [Amended]

7. Amend § 59.130 as follows:

a. Remove the phrase "(2000 edition)" and add, in its place, "(2009 edition)"; and

b. Remove the phrase "(1999 edition)" and add, in its place, "(2005 edition)".

[FR Doc. 2010–7810 Filed 4–6–10; 8:45 am]

BILLING CODE 8320–01–P

DEPARTMENT OF VETERANS AFFAIRS

38 CFR Part 51

RIN 2900–AN59

Update to NFPA 101, Life Safety Code, for State Home Facilities

AGENCY: Department of Veterans Affairs.

ACTION: Proposed rule.

SUMMARY: The Department of Veterans Affairs (VA) proposes to update one of its regulations so that State home facilities that receive a per diem for providing nursing home care to eligible Veterans will be required to meet certain provisions of the 2009 edition of the National Fire Protection Association's NFPA 101, Life Safety Code. This change is designed to ensure that State home facilities meet current industry-wide standards regarding life safety and fire safety.

DATES: Written comments must be received by VA on or before June 7, 2010.

ADDRESSES: Written comments may be submitted through *http://www.Regulations.gov;* by mail or hand-delivery to the Director, Regulations Management (02REG), Department of Veterans Affairs, 810 Vermont Avenue, NW., Room 1068, Washington, DC 20420; or by fax to (202) 273–9026. Comments should indicate that they are submitted in response to "RIN 2900–AN59—Update to NFPA 101, Life Safety Code, for State Home Facilities." Copies of comments received will be available for public inspection in the Office of Regulation Policy and Management, Room 1063B, between the hours of 8 a.m. and 4:30 p.m., Monday through Friday (except holidays). Please call (202) 461–4902 for an appointment. (This is not a toll-free number.) In addition, during the comment period, comments may be viewed online through the Federal Docket Management System (FDMS) at *http://www.Regulations.gov.*

FOR FURTHER INFORMATION CONTACT: Theresa Hayes at (202) 461–6771, Office of Geriatrics and Extended Care, Veterans Health Administration, Department of Veterans Affairs, 810 Vermont Avenue, NW., Washington, DC 20420. (The telephone number above is not a toll-free number).

SUPPLEMENTARY INFORMATION: This document proposes to amend 38 CFR 51.200. The regulation governs the physical environment of facilities for which VA pays per diem to a State for providing nursing home care to eligible veterans.

Currently, § 51.200 requires State home facilities to meet certain provisions of the National Fire Protection Association's NFPA 101, Life Safety Code (2006 edition). This document has been incorporated by reference in accordance with 5 U.S.C. 552(a) and 1 CFR part 51. We propose to update the regulation to refer to the current 2009 edition of the NFPA code. This change would require State home facilities to meet current industry-wide standards regarding life safety and fire

safety. We will request approval of the incorporation by reference of the 2009 edition of NFPA 101 from the Office of the Federal Register. We are not aware of any significant changes from the 2006 edition to the 2009 edition.

This document for which we are seeking incorporation by reference is available for inspection by appointment (call (202) 461–4902 for an appointment) at the Department of Veterans Affairs, Office of Regulation Policy and Management, Room 1063B, 810 Vermont Avenue, NW., Washington, DC 20420 between the hours of 8 a.m. and 4:30 p.m., Monday through Friday (except holidays). It is also available at the National Archives and Records Administration (NARA). For information on the availability of this document at NARA, call 202–741–6030, or go to: *http://www.archives.gov/federal_register/code_of_federal_regulations/ibr_locations.html*. In addition, copies may be obtained from the National Fire Protection Association, 1 Batterymarch Park, Quincy, MA 02269–9101. (For ordering information, call toll-free 1–800–344–3555 or go to *http://www.nfpa.org*.)

Unfunded Mandates

The Unfunded Mandates Reform Act of 1995 requires, at 2 U.S.C. 1532, that agencies prepare an assessment of anticipated costs and benefits before issuing any rule that may result in an expenditure by State, local, and tribal governments, in the aggregate, or by the private sector, of $100 million or more (adjusted annually for inflation) in any given year. This rule would have no such effect on State, local, and tribal governments, or on the private sector.

Paperwork Reduction Act

This document contains no collections of information under the Paperwork Reduction Act of 1995 (44 U.S.C. 3501–3521).

Executive Order 12866

Executive Order 12866 directs agencies to assess all costs and benefits of available regulatory alternatives and, when regulation is necessary, to select regulatory approaches that maximize net benefits (including potential economic, environmental, public health and safety, and other advantages; distributive impacts; and equity). The Executive Order classifies a "significant regulatory action" requiring review by the Office of Management and Budget as any regulatory action that is likely to result in a rule that may: (1) Have an annual effect on the economy of $100 million or more or adversely affect in a material way the economy, a sector of the economy, productivity, competition, jobs, the environment, public health or safety, or State, local, or tribal governments or communities; (2) create a serious inconsistency or interfere with an action taken or planned by another agency; (3) materially alter the budgetary impact of entitlements, grants, user fees, or loan programs or the rights and obligations of recipients thereof; or (4) raise novel legal or policy issues arising out of legal mandates, the President's priorities, or the principles set forth in Executive Order.

The economic, interagency, budgetary, legal, and policy implications of this proposed rule have been examined, and it has been determined not to be a significant regulatory action under Executive Order 12866.

Regulatory Flexibility Act

The Secretary hereby certifies that this regulatory amendment would not have a significant economic impact on a substantial number of small entities as they are defined in the Regulatory Flexibility Act, 5 U.S.C. 601–612. This rulemaking would affect veterans and State homes. The State homes that would be subject to this rulemaking are State government entities under the control of State governments. All State homes are owned, operated and managed by State governments except for a small number that are operated by entities under contract with State governments. These contractors are not small entities. Therefore, pursuant to 5 U.S.C. 605(b), this rule would be exempt from the initial and final regulatory flexibility analysis requirements of sections 603 and 604.

Catalog of Federal Domestic Assistance

The Catalog of Federal Domestic Assistance numbers and titles for the programs affected by this document are 64.005, Grants to States for Construction of State Home Facilities; 64.007, Blind Rehabilitation Centers; 64.008, Veterans Domiciliary Care; 64.009, Veterans Medical Care Benefits; 64.010, Veterans Nursing Home Care; 64.011, Veterans Dental Care; 64.012, Veterans Prescription Service; 64.013, Veterans Prosthetic Appliances; 64.014, Veterans State Domiciliary Care; 64.015, Veterans State Nursing Home Care; 64.016, Veterans State Hospital Care; 64.018, Sharing Specialized Medical Resources; 64.019, Veterans Rehabilitation Alcohol and Drug Dependence; 64.022, Veterans Home Based Primary Care; and 64.026, Veterans State Adult Day Health Care.

Signing Authority

The Secretary of Veterans Affairs, or designee, approved this document and authorized the undersigned to sign and submit the document to the Office of the Federal Register for publication electronically as an official document of the Department of Veterans Affairs. John R. Gingrich, Chief of Staff, Department of Veterans Affairs, approved this document on March 1, 2010, for publication.

List of Subjects in 38 CFR Part 51

Administrative practice and procedure, claims, day care, dental health, government contracts, grant programs—health, grant programs—veterans, health care, health facilities, health professions, health records, mental health programs, nursing homes, reporting and recordkeeping requirements, travel and transportation expenses, Veterans.

Dated: April 1, 2010.

Robert C. McFetridge,

Director, Regulation Policy and Management.

For the reasons set forth in the preamble, VA proposes to amend 38 CFR part 51 as follows:

PART 51—PER DIEM FOR NURSING HOME CARE OF VETERANS IN STATE HOMES

1. The authority citation for part 51 continues to read as follows:

Authority: 38 U.S.C. 101, 501, 1710, 1741–1743, 1745.

§ 51.200 [Amended]

2. Amend § 51.200 by removing the phrase "(2006 edition)" each place it appears and adding, in its place, "(2009 edition)".

[FR Doc. 2010–7811 Filed 4–6–10; 8:45 am]

BILLING CODE 8320–01–P

ENVIRONMENTAL PROTECTION AGENCY

40 CFR Part 761

[EPA–HQ–OPPT–2009–0757; FRL–8811–7]

RIN 2070–AJ38

Polychlorinated Biphenyls (PCBs); Reassessment of Use Authorizations

AGENCY: Environmental Protection Agency (EPA).

ACTION: Advance notice of proposed rulemaking (ANPRM).

SUMMARY: EPA is issuing an ANPRM for the use and distribution in commerce of certain classes of PCBs and PCB items

and certain other areas of the PCB regulations under the Toxic Substances Control Act (TSCA). EPA is reassessing its TSCA PCB use and distribution in commerce regulations to address: The use, distribution in commerce, marking, and storage for reuse of liquid PCBs in electric and non-electric equipment; the use of the 50 parts per million (ppm) level for excluded PCB products; the use of non-liquid PCBs; the use and distribution in commerce of PCBs in porous surfaces; and the marking of PCB articles in use. Also in this document, EPA is also reassessing the definitions of "excluded manufacturing process," "quantifiable level/level of detection," and "recycled PCBs." EPA is soliciting comments on these and other areas of the PCB use regulations. EPA is not soliciting comments on the PCB disposal regulations in this document.

DATES: Comments must be received on or before July 6, 2010.

See Unit XIII. of the **SUPPLEMENTARY INFORMATION** for meeting dates and other deadlines associated with the meetings.

ADDRESSES: Submit your comments, identified by docket identification (ID) number EPA–HQ–OPPT–2009–0757, by one of the following methods:

- *Federal eRulemaking Portal*: *http://www.regulations.gov*. Follow the on-line instructions for submitting comments.
- *Mail*: Document Control Office (7407M), Office of Pollution Prevention and Toxics (OPPT), Environmental Protection Agency, 1200 Pennsylvania Ave., NW., Washington, DC 20460–0001.
- *Hand Delivery*: OPPT Document Control Office (DCO), EPA East Bldg., Rm. 6428, 1201 Constitution Ave., NW., Washington, DC. Attention: Docket ID Number EPA–HQ–OPPT–2009–0757. The DCO is open from 8 a.m. to 4 p.m., Monday through Friday, excluding legal holidays. The telephone number for the DCO is (202) 564–8930. Such deliveries are only accepted during the DCO's normal hours of operation, and special arrangements should be made for deliveries of boxed information.

Instructions: Direct your comments to docket ID number EPA–HQ–OPPT–2009–0757. EPA's policy is that all comments received will be included in the docket without change and may be made available on-line at *http://www.regulations.gov*, including any personal information provided, unless the comment includes information claimed to be Confidential Business Information (CBI) or other information whose disclosure is restricted by statute. Do not submit information that you consider to be CBI or otherwise protected through regulations.gov or e-mail. The regulations.gov website is an "anonymous access" system, which means EPA will not know your identity or contact information unless you provide it in the body of your comment. If you send an e-mail comment directly to EPA without going through regulations.gov, your e-mail address will be automatically captured and included as part of the comment that is placed in the docket and made available on the Internet. If you submit an electronic comment, EPA recommends that you include your name and other contact information in the body of your comment and with any disk or CD-ROM you submit. If EPA cannot read your comment due to technical difficulties and cannot contact you for clarification, EPA may not be able to consider your comment. Electronic files should avoid the use of special characters, any form of encryption, and be free of any defects or viruses.

Docket: All documents in the docket are listed in the docket index available at *http://www.regulations.gov*. Although listed in the index, some information is not publicly available, e.g., CBI or other information whose disclosure is restricted by statute. Certain other material, such as copyrighted material, will be publicly available only in hard copy. Publicly available docket materials are available electronically at *http://www.regulations.gov*, or, if only available in hard copy, at the OPPT Docket. The OPPT Docket is located in the EPA Docket Center (EPA/DC) at Rm. 3334, EPA West Bldg., 1301 Constitution Ave., NW., Washington, DC. The EPA/DC Public Reading Room hours of operation are 8:30 a.m. to 4:30 p.m., Monday through Friday, excluding legal holidays. The telephone number of the EPA/DC Public Reading Room is (202) 566–1744, and the telephone number for the OPPT Docket is (202) 566–0280. Docket visitors are required to show photographic identification, pass through a metal detector, and sign the EPA visitor log. All visitor bags are processed through an X-ray machine and subject to search. Visitors will be provided an EPA/DC badge that must be visible at all times in the building and returned upon departure.

See Unit XIII. of the **SUPPLEMENTARY INFORMATION** for meeting locations.

FOR FURTHER INFORMATION CONTACT: *For general information contact*: Colby Lintner, Regulatory Coordinator, Environmental Assistance Division (7408M), Office of Pollution Prevention and Toxics, Environmental Protection Agency, 1200 Pennsylvania Ave., NW., Washington, DC 20460–0001; telephone number: (202) 554–1404; e-mail address: *TSCA-Hotline@epa.gov*.

For technical information contact: John H. Smith, National Program Chemicals Division (7404T), Office of Pollution Prevention and Toxics, Environmental Protection Agency, 1200 Pennsylvania Ave., NW., Washington, DC 20460–0001; telephone number: (202) 566–0512; e-mail address: *smith.johnh@epa.gov*.

SUPPLEMENTARY INFORMATION:

I. General Information

A. Does this Action Apply to Me?

You may be potentially affected by this action if you you manufacture, process, distribute in commerce, use, or dispose of PCBs. Potentially affected entities may include, but are not limited to:

- Utilities (NAICS code 22), e.g., Electric power and light companies, natural gas companies.
- Manufacturers (NAICS codes 31–33), e.g., Chemical manufacturers, electroindustry manufacturers, end-users of electricity, general contractors.
- Transportation and Warehousing (NAICS codes 48–49), e.g., Various modes of transportation including air, rail, water, ground, and pipeline.
- Real Estate (NAICS code 53), e.g., People who rent, lease, or sell commercial property.
- Professional, Scientific, and Technical Services (NAICS code 54), e.g., Testing laboratories, environmental consulting.
- Public Administration (NAICS code 92), e.g., Federal, State, and local agencies.
- Waste Management and Remediation Services (NAICS code 562), e.g., PCB waste handlers (e.g., storage facilities, landfills, incinerators), waste treatment and disposal, remediation services, material recovery facilities, waste transporters.
- Repair and Maintenance (NAICS code 811), e.g., Repair and maintenance of appliances, machinery, and equipment.

This listing is not intended to be exhaustive, but rather provides a guide for readers regarding entities likely to be affected by this action. Other types of entities not listed in this unit could also be affected. The North American Industrial Classification System (NAICS) codes have been provided to assist you and others in determining whether this action might apply to certain entities. To determine whether you or your business may be affected by this action, you should carefully examine the applicability provisions in 40 CFR part 761. If you have any

questions regarding the applicability of this action to a particular entity, consult the technical person listed under **FOR FURTHER INFORMATION CONTACT**.

B. What Should I Consider as I Prepare My Comments for EPA?

1. *Submitting CBI.* Do not submit this information to EPA through regulations.gov or e-mail. Clearly mark the part or all of the information that you claim to be CBI. For CBI information in a disk or CD-ROM that you mail to EPA, mark the outside of the disk or CD-ROM that you mail to EPA, mark the outside of the disk or CD-ROM as CBI and then identify electronically within the disk or CD-ROM the specific information that is claimed as CBI. In addition to one complete version of the comment that includes information claimed as CBI, a copy of the comment that does not contain the information claimed as CBI must be submitted for inclusion in the public docket. Information so marked will not be disclosed except in accordance with procedures set forth in 40 CFR part 2.

2. *Tips for preparing your comments.* When submitting comments, remember to:

i. Identify the document by docket ID number and other identifying information (subject heading, **Federal Register** date and page number).

ii. Follow directions. The Agency may ask you to respond to specific questions or organize comments by referencing a Code of Federal Regulations (CFR) part or section number.

iii. Explain why you agree or disagree; suggest alternatives and substitute language for your requested changes.

iv. Describe any assumptions and provide any technical information and/or data that you used.

v. If you estimate potential costs or burdens, explain how you arrived at your estimate in sufficient detail to allow for it to be reproduced.

vi. Provide specific examples to illustrate your concerns and suggest alternatives.

vii. Explain your views as clearly as possible, avoiding the use of profanity or personal threats.

viii. Make sure to submit your comments by the comment period deadline identified.

II. Background

A. What Action is the Agency Taking?

With this document, EPA is issuing an ANPRM for the use and distribution in commerce of certain classes of PCBs and PCB items and certain other areas of the PCB regulations under TSCA. EPA is reassessing its TSCA PCB use and distribution in commerce regulations, 40 CFR part 761, subparts B and C, to address:

1. The use, distribution in commerce, marking, and storage for reuse of liquid PCBs in electric and non-electric equipment.

2. The use of the 50 ppm level for excluded PCB products.

3. The use of non-liquid PCBs.

4. The use and distribution in commerce of PCBs in porous surfaces.

5. The marking of PCB articles in use.

EPA is also reassessing the definitions of "excluded manufacturing process," "quantifiable level/level of detection," and "recycled PCBs" in 40 CFR part 761, subpart A.

B. What is the Agency's Authority for Taking this Action?

The authority for this action comes from TSCA section 6(e)(2)(B) and (C) of TSCA (15 U.S.C. 2605(e)(2)(B) and (C)) as well as TSCA section 6(e)(1)(B) (15 U.S.C. 2605(e)(1)(B)). Section 6(e)(2)(A) of TSCA provides that "no person may manufacture, process, or distribute in commerce or use any polychlorinated biphenyl in a manner other than in a totally enclosed manner" after January 1, 1978. However, TSCA section 6(e)(2)(B) provides EPA with the authority to issue regulations allowing the use and distribution in commerce of PCBs in a manner other than in a totally enclosed manner if the EPA Administrator finds that the use and distribution in commerce "will not present an unreasonable risk of injury to health or the environment." (EPA's authority to allow distribution of PCBs in commerce is limited to those PCB items that were "sold for purposes other than resale" before April 1978 (TSCA section 6(e)(3)(C) (15 U.S.C. 2605(e)(3)(C))). Section 6(e)(2)(C) of TSCA defines "totally enclosed manner" as "any manner which will ensure that any exposure of human beings or the environment by the polychlorinated biphenyl will be insignificant as determined by the Administrator by rule." Section 6(e)(1)(B) of TSCA directs EPA to promulgate rules to require PCBs to be marked with clear and adequate warnings and instructions (15 U.S.C. 2605(e)(1)(B)).

III. Context of this ANPRM

In the 1970s, commercial manufacture of PCBs in the United States ceased. A substantial portion of the PCBs that had already been manufactured were still in use in many areas of the country; in 1976 EPA estimated that of 1.4 billion pounds (lbs.) of PCBs produced in the United States, 750 million lbs. remained in service in the country. Approximately 75% of the PCBs produced were for use as liquids in electrical or industrial equipment (Ref. 1). For some specific types of equipment, such as electrical capacitors, virtually all of the large number of units manufactured and in use contained PCBs, but for other types of equipment, such as electromagnets, only a small number of units contained PCBs (Ref. 2).

TSCA became effective on January 1, 1977. Section 6(e) of TSCA generally prohibited the manufacture, processing, distribution in commerce, and use of PCBs and charged EPA with issuing regulations for the marking and disposal of PCBs. EPA published the first regulations addressing the use of equipment containing PCBs on May 31, 1979 (Ref. 3). Over the 30 years since then, many changes have taken place in the industry sectors that use such equipment, and EPA believes that the balance of risks and benefits from the continued use of remaining equipment containing PCBs may have changed enough to consider amending the regulations.

A. Regulatory History

On December 30, 1977, EPA published a notice in the **Federal Register** stating that implementation of the January 1, 1978 ban imposed by TSCA was being postponed until 30 days after the promulgation of new regulations (Ref. 4). On May 31, 1979, EPA promulgated these regulations (Ref. 3). The regulations found that PCB liquid-filled capacitors, electromagnets, and transformers (other than railroad transformers) met the statutory definition of "totally enclosed," and were exempt from the ban in TSCA section 6(e)(2)(A) on manufacture, processing, distribution in commerce, or use. This EPA finding meant that it was not necessary to specifically authorize the use of these types of PCB-containing equipment. In this same regulation, EPA also authorized, in accordance with TSCA section 6(e)(2)(B), the use of other liquid-filled equipment that was not totally enclosed (railroad transformers, heat transfer systems, and hydraulic systems), based on a finding that the use would pose no unreasonable risk of injury to health or the environment, subject to conditions. One of the conditions EPA imposed on the authorization of most non-totally enclosed uses was a time limit on the use of PCBs at or above the established 50 ppm PCB regulatory cutoff. In the June 7, 1978 (Ref. 5), proposed rule for the use authorizations, EPA discussed its authority and rationale for establishing use limits:

Section 6(e)(2)(B) of TSCA permits EPA to authorize by rule the manufacturing, processing, distribution in commerce, and use of PCBs in a non-totally enclosed manner if these activities will not present an unreasonable risk of injury to health or the environment. EPA has determined that certain non-totally enclosed PCB use activities will not present an unreasonable risk and proposed to authorize these use activities for a period of 5 years after the effective date of the final rule. At that time, EPA will examine the need for continuing these authorizations.
(Ref. 5, p. 24807)

EPA has not previously undertaken a reassessment. In making this determination to make a reassessment, EPA weighed the effects of PCBs on health and the environment, the magnitude of exposure, and the reasonably ascertainable economic consequences of the rule. This determination is fully discussed in the support/voluntary draft environmental impact statement. These proposed time limits were, with minor modifications, adopted in the final rule:

Unlike all other activities that may be subject to an authorization under TSCA section 6(e)(2)(B), use activities are not prohibited under TSCA section 6(e)(3)(A). Accordingly, there is no automatic limit to the length of use authorizations. In deciding how long to authorize each use, EPA believes that it should have the opportunity to review each use in a timely way to ensure that there is no unreasonable risk associated with its continuation. In addition, improved technology or development of new PCB substitutes could reduce the need for the authorization. Accordingly EPA proposed a five-year limit on most use authorizations; however, no such limit was proposed on the use authorization for PCBs in electric equipment.
(Ref. 3, p. 31530)

After the May 31,1979, rule was published, the Environmental Defense Fund, Inc., (EDF) petitioned the U.S. Court of Appeals for the District of Columbia Circuit to review the portion of the 1979 regulation which designated the use of "intact and non-leaking" PCB liquid filled capacitors, electromagnets, and transformers (other than railroad transformers) as "totally enclosed." On October 30, 1980, the court decided that there was insufficient evidence in the record to support the Agency's classification of the equipment as "totally enclosed" (Ref. 6). The court vacated this portion of the rule and remanded it to EPA for further action. EPA, EDF, and certain industry interveners petitioned the court to stay the mandate while EPA conducted rulemaking beginning with an ANPRM, and a utility industry group agreed to develop factual information necessary for the rulemaking. The court granted the request for a stay and the text of the court order was published with EPA's ANPRM on March 10, 1981 (Ref. 7). On August 25, 1982, EPA issued a final rule authorizing the use of capacitors, electromagnets, and transformers other than railroad transformers, in accordance with TSCA section 6(e)(2)(B) (Ref. 8). Time limits were imposed on the use of certain types of PCB equipment posing an exposure risk to food and feed. Since 1982 there have been additional rulemakings (e.g., Refs. 9 and 10), which, with certain exceptions, have continued to allow the use of PCB-containing equipment, the passive removal of PCB-containing equipment from use through attrition, and to require the disposal of PCBs and PCB-containing equipment in an environmentally sound manner.

B. PCB Use Authorizations

Currently, under 40 CFR 761.30, the following liquid-filled PCB equipment is authorized for use in a non-totally enclosed manner:

- Electrical transformers.
- Railroad transformers.
- Mining equipment.
- Heat transfer systems.
- Hydraulic systems.
- Electromagnets.
- Switches.
- Voltage regulators.
- Electrical capacitors.
- Circuit breakers.
- Reclosers.
- Liquid-filled cable.
- Rectifiers.

The servicing, in accordance with specified conditions, of the following liquid-filled equipment is also authorized:

- Electrical transformers.
- Railroad transformers.
- Electromagnets.
- Switches.
- Voltage regulators.
- Circuit breakers.
- Reclosers.
- Liquid-filled cable.
- Rectifiers.

Liquid PCBs are authorized for use where they are a contaminant in the following equipment:

- Natural gas pipeline systems.
- Contaminated natural gas pipe and appurtenances.
- Other gas or liquid transmission systems.

There are also use authorizations for certain non-liquid PCBs applications: Carbonless copy paper and porous surfaces contaminated with PCBs regulated for disposal by spills of liquid PCBs. There are other use authorizations for research and development (40 CFR 761.30(j)), for scientific instruments (40 CFR 761.30(k)), and for decontaminated materials (40 CFR 761.30(u)).

However, there are no use authorizations for non-liquid PCB-containing products if they contain PCBs at concentrations > 50 ppm, including but not limited to adhesives, caulk, coatings, grease, paint, rubber or plastic electrical insulation, gaskets, sealants, and waxes.

In 40 CFR 761.35, storage for reuse of authorized PCB articles is allowed for up to 5 years, or longer if kept in a storage unit complying with TSCA or the Resource Conservation and Recovery Act (RCRA) requirements.

C. Distribution in Commerce Regulations

Section 6(e)(2)(C) of TSCA states, "The term 'totally enclosed manner' means any manner which will ensure that any exposure of human beings or the environment to a polychlorinated biphenyl will be insignificant as determined by the Administrator by rule." The definition established by rule in 40 CFR 761.3 is, "Totally enclosed manner means any manner that will ensure no exposure of human beings or the environment to any concentration of PCBs."

EPA has found that the distribution in commerce of intact and non-leaking equipment is "totally enclosed." See 40 CFR 761.20 (Ref. 3, p. 31542). Therefore, no authorization is required for the distribution in commerce for use of intact and non-leaking, liquid-filled electrical equipment, so long as the equipment was sold for purposes other than resale before July 1, 1979. Section 40 CFR 761.20 states:

In addition, the Administrator hereby finds, for purposes of section 6(e)(2)(C) of TSCA, that any exposure of human beings or the environment to PCBs, as measured or detected by any scientifically acceptable analytical method, may be significant, depending on such factors as the quantity of PCBs involved in the exposure, the likelihood of exposure to humans and the environment, and the effect of exposure. For purposes of determining which PCB Items are totally enclosed, pursuant to section 6(e)(2)(C) of TSCA, since exposure to such Items may be significant, the Administrator further finds that a totally enclosed manner is a manner which results in no exposure to humans or the environment to PCBs. The following activities are considered totally enclosed: distribution in commerce of intact, nonleaking electrical equipment such as transformers (including transformers used in railway locomotives and self-propelled cars), capacitors, electromagnets, voltage regulators, switches (including sectionalizers and motor starters), circuit breakers, reclosers, and cable that contain PCBs at any concentration and processing and distribution in commerce of PCB Equipment

containing an intact, nonleaking PCB Capacitor.

Since then, EPA has gathered information showing measurable emissions of PCBs from some otherwise intact and non-leaking equipment, which is not energized (providing or receiving electricity), to the ambient air (Ref. 11). "Weeps" and "seeps" and other leaks are visual indicators that the distribution in commerce of some of this equipment could result in exposure to humans or the environment to PCBs.

D. PCB Health Effects

The following information about the health effects of PCBs is taken directly from the 1996 EPA document entitled "PCBs: Cancer Dose Response Assessment and Application to Environmental Mixtures" (Ref. 12), which is the source document for the 1997 EPA Integrated Risk Information System (IRIS) file for PCBs. The information is referenced in the 1997 EPA IRIS file for PCBs under heading II.A.2 (Human Carcinogenicity Data), it states in part:

Occupational studies show some increases in cancer mortality in workers exposed to PCBs. Bertazzi et al. (1987) found significant excess cancer mortality at all sites combined and in the gastrointestinal tract in workers exposed to PCBs containing 54 and 42 percent chlorine. Brown (1987) found significant excess mortality from cancer of the liver, gall bladder, and biliary tract in capacitor manufacturing workers exposed to Aroclors 1254, 1242, and 1016. Sinks et al. (1992) found significant excess malignant melanoma mortality in workers exposed to Aroclors 1242 and 1016. Some other studies, however, found no increases in cancer mortality attributable to PCB exposure (ATSDR, 1993). The lack of consistency overall limits the ability to draw definitive conclusions from these studies. Incidents in Japan and Taiwan where humans consumed rice oil contaminated with PCBs showed some excesses of liver cancer, but this has been attributed, at least in part, to heating of the PCBs and rice oil, causing formation of chlorinated dibenzofurans (ATSDR, 1993; Safe, 1994).

A study of rats fed diets containing Aroclors 1260, 1254, 1242, or 1016 found statistically significant, dose-related, increased incidences of liver tumors from each mixture (Brunner et al., 1996). Earlier studies found high, statistically significant incidences of liver tumors in rats ingesting Aroclor 1260 or Clophen A 60 (Kimbrough et al., 1975; Norback and Weltman, 1985; Schaeffer et al., 1984). Partial lifetime studies found precancerous liver lesions in rats and mice ingesting PCB mixtures of high or low chlorine content.

Several mixtures and congeners test positive for tumor promotion (Silberhorn et al., 1990). Toxicity of some PCB congeners is correlated with induction of mixed-function oxidases; some congeners are phenobarbital-type inducers, some are 3-methylcholanthrene-type inducers, and some have mixed inducing properties (McFarland and Clarke, 1989). The latter two groups most resemble 2,3,7,8-tetrachlorodibenzo-p-dioxin in structure and toxicity.

Overall, the human studies have been considered to provide limited (IARC, 1987) to inadequate (U.S. EPA, 1988a) evidence of carcinogenicity. The animal studies, however, have been considered to provide sufficient evidence of carcinogenicity (IARC, 1987; U.S. EPA, 1988a). Based on these findings, some commercial PCB mixtures have been characterized as probably carcinogenic to humans (IARC, 1987; U.S. EPA, 1988a). There has been some controversy about how this conclusion applies to PCB mixtures found in the environment.
(Ref. 13)

In addition to cancer, the 1996 document states, "Although not covered by this report PCBs also have significant ecological and human health effects other than cancer, including neurotoxicity, reproductive and developmental toxicity, immune system suppression, liver damage, skin irritation, and endocrine disruption. Toxic effects have been observed from acute and chronic exposures to PCB mixtures with varying chlorine content" (Ref. 12).

The Agency for Toxic Substances and Disease Registry (ATSDR) Toxicological Profile for PCBs of November 2000 (2000 ATSDR Toxicological Profile) is a more recent review of the toxicity of PCBs. The study's summary of health effects (chapter 2.2) states:

The preponderance of the biomedical data from human and laboratory mammal studies provide strong evidence of the toxic potential of exposure to PCBs. Information on health effects of PCBs is available from studies of people exposed in the workplace, by consumption of contaminated rice oil in Japan (the Yusho incident) and Taiwan (the Yu-Cheng incident), by consumption of contaminated fish, and via general environmental exposures, as well as food products of animal origin....[H]ealth effects that have been associated with exposure to PCBs in humans and/or animals include liver, thyroid, dermal and ocular changes, immunological alterations, neurodevelopmental changes, reduced birth weight, reproductive toxicity, and cancer. The human studies of the Yusho and Yu-Cheng poisoning incidents, contaminated fish consumption, and general populations are complicated by the mixture nature of PCB exposure and possible interactions between the congeneric components and other chemicals.... Therefore, although PCBs may have contributed to adverse health effects in these human populations, it cannot be determined with certainty which congeners may have caused the effects. Animal studies have shown that PCBs induce effects in monkeys at lower doses than in other species, and that immunological, dermal/ocular, and neurobehavioral changes are particularly sensitive indicators of toxicity in monkeys exposed either as adults, or during pre- or postnatal periods.
(Ref. 14)

EPA continues to examine more recent scientific studies on the health effects of PCBs and seeks comments and/or information on the health effects of PCBs available since the 1997 EPA update of IRIS and since the 2000 ATSDR Toxicological Profile. Any proposed or final PCB rulemaking which relies on PCB health effects will use information subject to EPA's rigorous peer-review process.

E. PCB Environmental Effects

The 2000 ATSDR Toxicological Profile for PCBs summarizes the environmental fate, transport, and bioaccumulation of PCBs as follows:

Once in the environment, PCBs do not readily break down and therefore may remain for very long periods of time. They can easily cycle between air, water, and soil. For example, PCBs can enter the air by evaporation from both soil and water. In air, PCBs can be carried long distances and have been found in snow and sea water in areas far away from where they were released into the environment, such as in the arctic. As a consequence, PCBs are found all over the world. In general, the lighter the type of PCBs, the further they may be transported from the source of contamination. PCBs are present as solid particles or as a vapor in the atmosphere. They will eventually return to land and water by settling as dust or in rain and snow. In water, PCBs may be transported by currents, attach to bottom sediment or particles in the water, and evaporate into air. Heavy kinds of PCBs are more likely to settle into sediments while lighter PCBs are more likely to evaporate to air. Sediments that contain PCBs can also release the PCBs into the surrounding water. PCBs stick strongly to soil and will not usually be carried deep into the soil with rainwater. They do not readily break down in soil and may stay in the soil for months or years; generally, the more chlorine atoms that the PCBs contain, the more slowly they break down. Evaporation appears to be an important way by which the lighter PCBs leave soil. As a gas, PCBs can accumulate in the leaves and above-ground parts of plants and food crops. PCBs are taken up into the bodies of small organisms and fish in water. They are also taken up by other animals that eat these aquatic animals as food. PCBs especially accumulate in fish and marine mammals (such as seals and whales) reaching levels that may be many thousands of times higher than in water. PCB levels are highest in animals high up in the food chain.
(Ref. 14)

The 2000 ATSDR Toxicological Profile also summarizes ecotoxicological effects of PCBs in wildlife (Ref. 14). Information in the 2000 ATSDR Toxicological Profile is gathered from experimental studies and field

observations of wildlife, specifically outlining PCB effects in fish, bird, and mammal species. The biological responses in wildlife to exposures to individual PCB congeners and commercial PCB mixtures vary widely in these studies, possibly reflecting not only variability in susceptibility among species, but also differences in the mechanism of action or selective metabolism of individual congeners. Noteworthy impacts on fish, birds, and mammals from this collective data include neurological/behavioral, immunological, dermal, and reproductive/developmental effects. Observed PCB effects related to neurological impairment include alterations in central nervous system neurotransmitter levels, retarded learning, increased activity, and behavioral changes. Immunological effects consist of morphological changes in organs related to the immune system, as well as functional impairment of humoral- and cell-mediated immune responses. Dermal effects in species include adverse effects on fins and tails in fish, and abnormal skin, hair, and nail growth in mammals. Lastly, reproductive and developmental impacts consist of increased embryo/fetal loss through effects such as decreased egg hatchability and reduced embryo implantation (Ref. 14).

EPA seeks information on the environmental effects of PCBs that became available after the 2000 ATSDR Toxicological Profile (Ref. 14).

IV. Objective of this ANPRM

The objective of this ANPRM is to announce the Agency's intent to reassess the current use authorizations for certain PCB uses to determine whether they may now pose an unreasonable risk to human health and the environment. This reassessment will be based in part upon information and experience acquired in dealing with PCBs over the past 3 decades. This ANPRM solicits information from the public on several topics to assist EPA in making this reassessment.

Since the Agency first promulgated its PCB use regulations in 1979, EPA's knowledge about the universe of PCB materials has greatly increased. The Agency has gained valuable knowledge and experience regarding the various sources and uses of PCB materials. Over the past 30 years, EPA has had the opportunity to evaluate and draw conclusions about the effectiveness of the PCB regulations in preventing an unreasonable risk to human health and the environment from exposure to PCBs, as well as their economic impact. This document details EPA's observations on why there is reason to make changes in the regulations. At the present time, EPA is investigating whether some authorized uses of PCBs should be eliminated or phased-out and whether more stringent use and servicing conditions would be appropriate. EPA is also re-examining the geographical and numerical extent of PCBs and PCB items, which are subject to the use regulations. The objective of the anticipated rulemaking would be to modify any of the regulations that apply to PCBs or PCB items, as necessary, if these uses present an unreasonable risk to human health and the environment, taking into account conditions as they exist and as they are likely to exist in the future.

EPA seeks information that will be useful in making the findings required by TSCA section 6. By prohibiting the use of PCBs (except in a totally enclosed manner), Congress established a statutory presumption that use of PCBs poses an unreasonable risk of injury to health or the environment. In order to assess whether a use poses "no unreasonable risks," EPA would include an assessment of impacts on the economy, electric energy availability, and all other health, environmental, or social impacts that could be expected from adoption of alternatives to PCBs. There is a list of several questions related to EPA's reassessment in Unit XIV. Responses to the questions will provide EPA with information needed to assist in its reassessment; other information, of course, is also welcome.

EPA recognizes that there may be differences in the maintenance operations, inventories, planning, funding, and budgets for different owners of electrical equipment and does not make any assumptions about these differences. For example, when compared to very large interstate utilities, small municipal and cooperative utilities may have a very different approach to address the replacement of leaking equipment. Where applicable and appropriate, small municipal and cooperative utility responders should provide information about the impacts a phaseout of PCB-containing equipment might have on their operations and their customers. In particular, EPA encourages small municipal and cooperative utilities to take the time to answer the questions in Unit XIV. or otherwise provide details about maintenance operations, inventories, planning, funding, budgets, or any other information related to the cost of addressing the sound environmental management of the PCBs in their equipment and measures they have taken or planned to take and how these measures will help to safely manage their PCBs. EPA also is interested in exploring a range of incentives or programs that might facilitate organizations with limited budgets to remove regulated PCBs and PCB equipment from their systems and facilities.

In this document, EPA is also announcing plans to involve stakeholders in gathering information to inform EPA's determination of the scope of the problem, and EPA's decision on the best ways to address risks that may be present from current PCB use authorizations. EPA will sponsor a series of public meetings around the country to solicit stakeholder comments on this document. Specific information regarding the locations, dates, and times of the public meetings are included in Unit XIII.

V. EPA's Reasons for Reassessing Existing Use and Distribution Provisions

A. Attrition, Aging of Equipment, and Spills

All of the PCB-containing equipment in current use, which has been operating in accordance with the 1979 and subsequent use authorizations, is at least 30 years old. Since the ban on manufacturing in 1979, no new equipment containing PCBs at concentrations greater than or equal to (≥) 50 ppm has been manufactured. The total number of PCB transformers in the United States is decreasing (Ref. 15) but there are still many PCB transformers in use (Ref. 16). Also, all but the most recently manufactured PCB-containing equipment may be nearing the end of its expected useful life, although the useful life of some equipment may have effectively been extended by extensive maintenance and re-building. The useful life of transformers is typically no more than 30–40 years (Ref. 2).

Equipment is increasingly vulnerable to leaks the older it becomes. For example, between 2002 and 2005, two large, aging electrical transformers located on Exxon Mobil's offshore oil and gas platform, Hondo, in the Santa Barbara Channel, leaked nearly 400 gallons of PCB-contaminated fluid. Exxon allowed one of the transformers to leak for almost 2 years before repairing it (Ref. 17).

Several statutes and regulations require reporting of spills of hazardous chemicals, including PCBs, to the United States Coast Guard National Response Center. EPA contacted the National Response Center (Ref. 18) to find out how many PCB spills have been reported historically. The National

Response Center advised EPA that there were a total of 5,578 spills associated with PCBs reported from 1990 through August 19, 2009 (Ref. 19).

B. International Developments

PCBs are persistent chemicals and it is internationally recognized that they pose a risk to health and the environment and need to be removed from use. As of October 6, 2009, 166 countries have signed and ratified, accepted, approved, or accessed the Stockholm Convention on Persistent Organic Pollutants (Stockholm Convention), which among other things requires parties to make determined efforts to phaseout certain ongoing uses of PCBs by the year 2025. The United States is a signatory to the Stockholm Convention but has not yet ratified it (Ref. 20). A similar agreement, which has an earlier date relating to the phaseout of certain ongoing uses of PCBs, is the 1998 Aarhus Protocol on Persistent Organic Pollutants of the 1979 Convention on Long-Range Transboundary Air Pollution, which the United States signed in 1998. As with the Stockholm Convention, the United States is a signatory to the Aarhus Protocol, but has not yet ratified this agreement (Ref. 21).

On September 17, 2008, Canada published PCB ban and phaseout regulations with bans starting in 2009 for high concentration PCBs (Ref. 22). In the Canadian regulations, low-level (< 500 ppm) equipment must be removed from use by 2025.

C. Disposal and Cleanup Costs

EPA anticipates that disposal costs may increase faster than the general increase in inflation or cost of living. The population of PCB-containing equipment is continually decreasing and will never grow or rebound due to the ban on manufacturing. This may make the economics of retaining a presence in the PCB storage and disposal industry potentially less economically attractive for the waste management industry. The numerous disposal options and excess disposal capacity currently present may not be available in the future, so the costs and benefits of continuing to operate aging equipment change in the future. The benefits of continued use of PCB-containing equipment are also diminished by the increasing risk that aging equipment may fail in a manner that releases PCBs to the environment as that equipment reaches the end of its useful life. The cost of cleaning up PCB spills may exceed the cost of reclassifying or disposing of the intact PCB equipment and replacing it with new equipment. The consequences include both the direct costs to the equipment owners in damage, equipment replacement, service interruption, and lost revenue, and also the liability costs of losses to other parties, and compensation and potential fines for damages to human health and the environment. EPA seeks information and comment on how much the possibility of spills and the costs of cleanup affect the decisions of facility owners and operators regarding the management, removal, reclassification, or replacement of PCB equipment.

D. Insurance Costs

EPA believes that the cost of liability insurance for owners of PCB equipment is likely to increase significantly as the equipment continues to age. Insurers have already observed the increased rate of failure in equipment which is approaching the end of its useful life expectancy (Ref. 23). EPA anticipates that in the future there will be continuous increases in the cost of liability insurance to cover all equipment because of numbers of releases and contamination from PCB equipment which is at least 30 years old. EPA seeks comments on the comparison of the cost of future liability insurance with potential costs for testing and reclassification of potentially contaminated equipment either before it has failed or before there has been a determination made to dispose of it. EPA seeks information on historical changes in insurance premiums, as PCB-containing equipment has aged, and any projections of changes in future rates as a result of projected changes in failure rates. EPA also seeks information and comment on the extent to which the availability of commercial liability insurance or self-insurance by facilities affects facility owners' and operators' decisions on how to manage removal or reclassification of PCB equipment that may be nearing the end of its useful life.

E. Hazard Assessment of PCBs

EPA is evaluating the risks from polychlorinated dibenzo-*p*-dioxin (PCDDs) and structurally similar chemicals, such as certain PCBs, through a process referred to as the Dioxin Reassessment (Ref. 24). Polychlorinated dibenzo-*p*-dioxins, polychlorinated dibenzofurans (PCDFs), and some PCBs as molecules are structurally similar and have been shown to have similar impacts on human health and the environment. Also, under certain conditions, the incomplete combustion of PCB-containing materials produces PCDDs and PCDFs, including some of the more toxic congeners. Preliminary indications from the 2003 Draft Dioxin Reassessment are that the toxicity of PCBs in general is higher than the toxicity values that EPA used in developing previous TSCA PCB regulations. Some PCB congeners, sometimes referred to as co-planar PCBs or dioxin-like PCBs, are considered to have toxicities similar to the most toxic of the PCDDs and PCDFs. EPA has not yet determined how a potentially higher toxicity of these PCBs would impact regulatory findings used to make risk based decisions. It is possible that EPA would find that some risks, which were found to be reasonable using older PCB toxicity information, would be unreasonable when using potentially higher toxicity information. If this is the case, that information my affect any proposed rule that EPA might issue. Any proposed or final PCB rulemaking which relies on the contribution of dioxin-like PCBs to the overall toxicity of PCBs will be based on the finalized Dioxin Reassessment or another EPA peer-reviewed document.

F. Risks of PCB Substitute Materials

EPA seeks information on the current and likely future substitute materials for PCBs that are currently in use or may be put into service in the future. EPA is particularly interested in the chemical, physical, flammability, and toxicological properties of these materials. This information will be essential to a consideration of the net differences in risks, were these materials to be substituted for PCB equipment currently in use.

G. Updating Information on Releases of PCBs

EPA does not have a current, thorough national assessment of the risks to human health and the environment from PCB releases. Information is fragmentary and much of it is geographically limited. For instance, the Great Lakes program in which EPA participates has published recent estimates of PCB releases, but such estimates are statewide, and similar estimates are not available for all States in the United States (Ref. 25). The New York Academy of Sciences published a study of PCB releases into the waterways feeding into the New York/New Jersey harbor, breaking down the releases by type of source (Ref. 26), but similar studies are not available for most waterways in the country. Releases to the environment exceeding the reportable quantity for PCBs must be reported promptly to the National Response Center. In addition to the

information which is available through the National Response Center, EPA seeks any information or data on releases of PCBs, to the environment from all kinds of sources, in order to set the releases that are the subject of the regulations being considered into a larger context. EPA seeks information on the causes of such releases, whether the releases reached the environment or were contained, and any information on human health or environmental consequences.

H. Risks From the Contamination of Food from PCB-Containing Oils

Currently the use and storage for reuse of PCB transformers that pose an exposure risk to food or feed are prohibited (40 CFR 761.30(a)(1)(i)). The use and storage for reuse of large high voltage capacitors and large low voltage capacitors which pose an exposure risk to food or feed are also prohibited (40 CFR 761.30(l)(1)(i)). However, both transformers and capacitors containing:

- < 500 ppm PCBs at any weight or volume; or
- < 1.36 kilograms (kg) or 3 lbs. of dielectric fluid at any PCB concentration, are not included in these prohibitions.

To lessen the likelihood of such food and feed contamination from these sources, EPA is considering broadening the prohibition on the use and storage for reuse of PCBs that pose an exposure risk to food and feed, including PCB articles containing greater than 0.05 liters (or approximately 1.7 fluid ounces) of dielectric fluid. PCB concentrations in food are regulated by the Food and Drug Administration and PCB concentrations in feed are regulated by the United States Department of Agriculture (USDA).

There have been two recent incidents of particular note in Europe of very significant contamination of foods and a subsequent recall of those foods from the international market. Because of the presence of trace amounts of dioxins which are present in most PCBs, these two crises also became dioxin crises. These are discussed as follows.

1. *Belgium*. The "Belgian PCB/dioxin crisis" began in January 1999, when 50 kg of PCBs contaminated with 1 gram (g) of dioxins were accidentally added to a stock of recycled fat used for the production of 500 tons of animal feed in Belgium. Although signs of poultry poisoning were noticed by February 1999, the extent of the contamination was publicly announced only in May 1999, when it appeared that more than 2,500 poultry and pig farms could have been involved. The highest concentrations of PCBs and dioxins and the highest percentage of affected animals were found in poultry.

The Belgian government estimates that the dioxin crisis cost approximately $493 million, with approximately $106 million attributed to the loss in the swine sector (in 1999 1 Euro = 1.06 U.S. dollars). As other European Union (EU) countries were also affected by export bans, the final cost of this incident worldwide will likely be higher (Refs. 27, 28, and 29).

2. *Ireland*. In December 2008, Irish pork products were removed from distribution in commerce. This action was taken by the Food Safety Authority of Ireland after finding levels of PCBs and PCDDs in the food at concentrations in excess of EU health standards for food. Preliminary investigations indicated that a single supplier's feed, which had been contaminated from PCB oil in equipment, had been distributed to farmers broadly throughout the Republic of Ireland and Northern Ireland. All pork products produced in Ireland after September 1, 2008 were removed from sale in early December 2008. Details of the full investigation and the economic impact of the contamination are not yet available (Refs. 30, 31, and 32).

I. Risks in Public Buildings From Fluorescent Light Ballasts

EPA is concerned about the release of high concentrations of PCBs from fluorescent light ballasts, particularly in public buildings, such as schools. There are anecdotal accounts of spills from this source and anecdotal information that PCB fluorescent light ballasts have a lifetime of less than 10 years. One of these spills was a significant release from fluorescent light ballasts, almost 20 years after the publication of the PCB use regulations, at the Standing Rock Indian Reservation, ND.

On February 2, 1998, there were complaints of respiratory problems in the administration buildings at the Standing Rock Indian Reservation in North Dakota. On February 5, 1998, EPA received an urgent telephone call from the Standing Rock Sioux Tribe in North Dakota about possible PCB contamination from leaking fluorescent light ballasts. The light ballasts were located in the elementary school, administration building, high school library, and several Bureau of Indian Affairs (BIA) buildings on the reservation (Refs. 33 and 34). EPA determined that many of the fluorescent light ballasts contained PCBs. A sampling contractor found PCBs above EPA's PCB spill cleanup levels in light fixtures, office equipment and carpeting. BIA hired a contractor to decontaminate all areas where it found detectable levels. The contractor removed light ballasts and disposed of all ballasts and contaminated materials as PCB waste. A high school building where contamination was found was closed from February to June, but reopened for summer school. The cleanup for the 4 buildings at Standing Rock cost BIA more than $500,000 (Ref. 35). The estimated cost for removing the non-leaking ballasts from 60 other buildings in the BIA Great Plains Region (formerly the Aberdeen Area) was $60,000.

J. Environmental Justice Considerations

EPA seeks comments on any disproportionate environmental and public health impacts that PCB use and distribution in commerce for use may have on minority, low-income, tribal, and disadvantaged populations. As explained in Unit III.D., it is noted that ATSDR has concluded that there may be an adverse impact on the health of persons who eat fish contaminated with PCBs. Disadvantaged populations may be more exposed to PCBs in contaminated fish than members of the general population. Some disadvantaged communities, such as Indian tribes, have subsistence lifestyles and rely on fish and mammals that may be caught in PCB contaminated waters and environs, as a primary source of nutrition. Fish in these waters may have been contaminated by both PCB wastes disposed of prior to the use authorizations, as well as releases that have occurred from the currently authorized use, distribution in commerce and disposal of PCBs (Refs. 14, 36, 37, 38, 39, 40, and 41).

In addition, EPA is concerned about the presence of the potential risks to urban environmental justice communities from PCB releases at railroad substations, electrical substations, and electrical equipment storage areas. EPA seeks specific information about the prevalence of spills and other releases, including fires, from the use of PCBs in environmental justice areas. The focus of the information gathering in Unit XIV. is owners and operators of regulated electrical equipment and those using PCBs which are authorized in part 40 CFR part 761. However, EPA also seeks comments from minority, low-income, tribal, and disadvantaged persons and their representatives, who are not direct owners or users of PCBs and PCB equipment.

EPA is also announcing public meetings to discuss the Agency's reassessment of the existing PCB use authorizations at several locations around the country. The dates,

locations, and times of the meetings are included in Unit XIII. Any additional meetings will be announced on the PCB website (*http://www.epa.gov/epawaste/hazard/tsd/pcbs/index.htm*) at least 30 days prior to the first meeting date. Please refer to the PCB website or call Christine Zachek at (202) 566–2219 for further details. At these meetings, representatives of minority, low-income, tribal, and disadvantaged populations will be able to provide oral comments on the proposed regulations. These persons will also have the opportunity to provide comments to EPA as part of this ANPRM.

VI. Summary of Possible Regulatory Changes for PCB-Containing Equipment Under Consideration

This unit identifies possible changes to the PCB use regulations that EPA may consider in a future notice of proposed rulemaking. Any future regulatory action to propose these changes will be supported by an analysis of costs and benefits, as is required by TSCA. This analysis will be supported, in part, by the quality of the data submitted as a result of the ANPRM.

A. Options for Initial Phaseout Regulations

A potential phaseout of any PCB use authorizations might be implemented gradually, allowing some use to continue under more restrictions before the end of the use authorization. The Agency may consider a number of regulatory measures, including, but not limited to, the following:

- Require testing of equipment which is stored for reuse or removed from service for any reason, and which is assumed to contain PCBs at concentrations ≥ 50 ppm in accordance with §761.2.
- Require that where such equipment is found to contain PCBs at concentrations ≥ 50 ppm after testing, within 30 days of receiving the test results the owner must either reclassify the equipment to < 50 ppm PCBs or designate it for disposal.
- Eliminate all currently authorized PCB equipment servicing except for reclassification.
- Require marking of all equipment which is known or assumed (in accordance with §761.2) to contain PCBs at ≥ 50 ppm.
- Increase the inspection frequency to a minimum of once every month for non-leaking known or assumed ≥ 500 ppm PCB equipment in use.
- Before the final phaseout date(s), broaden the prohibition on the use of PCBs in transformers that pose an exposure risk to food or feed to include use of PCB-contaminated transformers.
- Broaden the definition of PCB article (this would also require changing other definitions) to include all equipment containing > 0.05 liters (or approximately 1.7 fluid ounces) of dielectric fluid with ≥ 50 ppm PCBs, in place of the current definition which regulates transformers and capacitors containing ≥ 3 lbs. of dielectric fluid.
- Require registration of PCB large capacitors containing a specified volume of dielectric fluid or having a specified external volume or dimensions.
- Eliminate the authorization for storage of PCB equipment for reuse.
- Eliminate the use authorization for PCBs in carbonless copy paper.
- Eliminate totally enclosed determination for distribution in commerce.
- Require reporting/notification to EPA Regional Administrators when PCBs are found in any pipeline system, regardless of the source of PCBs or the owner of the pipeline.

B. Potential Time Frames for Completing the Removal of PCB Equipment From Service

These measures would phaseout all PCB-electrical equipment uses with interim deadlines by equipment concentration and type.

- By 2015, eliminate all use of askarel equipment (≥ 100,000 ppm PCBs), removing from service the equipment in high potential exposure areas first. EPA is considering allowing exceptions on a case-by-case basis based on hardship and no unreasonable risk. Exceptions may be granted based on an application and approved exceptions may be published on the PCB website.
- By 2020, eliminate all use of oil-filled PCB equipment (≥ 500 ppm) and the authorization for use of PCBs at ≥ 50 ppm in pipeline systems.
- By 2025, eliminate all use of any PCB contaminated equipment (≥ 50 ppm), which is still authorized for use.

VII. Information to Be Considered During EPA Reassessment of PCB Use Authorizations

This unit outlines what information EPA believes is important to consider when reassessing PCB use authorizations. EPA seeks comment on any other information, which may not be included in this unit, but which you believe is important for EPA to consider when reassessing PCB use authorizations.

A. Liquid-filled Electrical Equipment (Except Railroad Transformers and Mining Equipment)

EPA seeks information on the specific population of any electrical equipment that contains greater than 2 fluid ounces of dielectric fluid with PCBs ≥ 1 ppm and that was manufactured prior to July 31, 1979: Transformers (regulated at 40 CFR 761.30(a)), electromagnets (regulated at 40 CFR 761.30(a)), switches (regulated at 40 CFR 761.30(h)), voltage regulators (regulated at 40 CFR 761.30(h)), electrical capacitors (regulated at 40 CFR 761.30(l)), circuit breakers (regulated at 40 CFR 761.30(m)), reclosers (regulated at 40 CFR 761.30(m)), liquid-filled cable (regulated at 40 CFR 761.30(m)), and rectifiers (regulated at 40 CFR 761.30(r)). Each unit describes specifically what information EPA solicits. EPA encourages small business owners and small municipal and cooperative utilities to provide details on their PCB-containing electrical equipment population characteristics and their management activities for the equipment.

1. *Population characteristics for transformers, electromagnets, switches, voltage regulators, electrical capacitors, circuit breakers, reclosers, liquid-filled cable, and rectifiers.* Information that EPA seeks about the use of this equipment appears in questions, which are located in Unit XIV.A.–E.

2. *Servicing.* Since the first use regulations for liquid-filled PCB-containing equipment, EPA has continued to prescribe conditions for authorized servicing (maintaining or repairing) this equipment, which facilitated extending the life of the equipment, in order to ease the hardship an immediate ban would have caused owners. Most life-extending use conditions are included in the authorization for servicing:

- Draining, repairing, and putting back into service PCB-contaminated electrical equipment.
- Topping off and putting back into service PCB-electrical equipment.
- Blending the oil drained from multiple pieces of PCB-containing equipment for servicing.
- Adding blended or other PCB-containing oil into repaired, drained equipment.
- Reclassifying.
- Distributing PCB-containing equipment in commerce for repair without manifesting.
- Storing company-owned equipment for servicing without any conditions to protect against leaks or spills.

• Servicing equipment which is owned by others, without having commercial storage approvals.

EPA believes that this equipment is nearing the final stages of useful life, after a minimum of 30 years of use. When this aging equipment fails to function in use or is otherwise removed from service, and if there is a need to prolong the life of the equipment, EPA believes that the PCBs should be removed from the equipment and disposed of in accordance with the regulations in 40 CFR part 761, subpart D. The reclassification of out-of-service equipment could be considered preventive maintenance and does not require service interruption, lost revenue, or liability costs of losses to other parties. In the brochure, entitled "Promoting the Voluntary Phase-Down of PCB-Containing Equipment," published in October 2005 by the Utilities Solid Waste Activities Group (USWAG) (Ref. 42), it states that:

> Many utility companies across the country have procedures in place to ensure that most equipment containing PCBs in concentrations > 50 ppm identified after removal from the field is either disposed of and not returned to service or retrofilled before being returned to service. This practice helps ensure the accelerated retirement from service of a large class of potentially PCB-containing equipment (e.g., distribution pole-top and padmount transformers) that could otherwise lawfully be placed back into service. USWAG will continue to actively promote these systematic practices of voluntarily identifying and retiring PCB-containing equipment from service.

On April 2, 2001, EPA provided new reclassification procedures which include refilling mineral oil filled equipment with liquid containing < 2 ppm total PCBs (Ref. 10). A majority of liquid-filled equipment which was manufactured to contain mineral oil dielectric fluid (mineral oil) and which remains in use can be easily reclassified to contain < 50 ppm with a thorough draining and refilling with liquid containing < 2 ppm PCBs. If an owner determines that the equipment is not worth reclassifying, there currently are numerous disposal options and excess disposal capacity for the equipment. EPA seeks information on the types and extent of service-extending maintenance and rebuilding of PCB-containing transformers, railroad transformers, heat transfer systems, hydraulic systems, electromagnets, switches, voltage regulators, circuit breakers, reclosers, cable, and rectifiers. EPA's questions about servicing are located in Unit XIV.F.

3. *Identifying and managing the use, removal from use, and disposal.* In the public comments provided during the 1979 rulemaking, electrical equipment owners stated that they did not know where PCB-containing equipment was located (Ref. 3). In the 30 years since, EPA believes that it would have been prudent for owners to implement a plan during that time to locate any regulated equipment. The common use and availability of bar code labels and scanning equipment and user-friendly computerized inventory management systems, plus the ability of global positioning systems to precisely specify locations, should facilitate the development and maintenance of an inventory of PCB-containing regulated equipment. Equipment owners previously told EPA that it was not possible to determine whether mineral oil-filled equipment contained PCBs unless the oil was tested, and testing was expensive. EPA agrees that it is necessary to collect oil to test it and there is a cost associated with the oil sample collection and chemical analysis. However, at the time of disposal it is already necessary to test to determine the PCB concentration to determine how the equipment is regulated for disposal. Based on current regulatory requirements, the cost of chemical analysis would have to be paid at the time of the disposal of the equipment, regardless of a non-attrition-based phaseout. Collection and analysis of oil would only be an additional cost if EPA imposes a new requirement to test in-service and energized equipment.

Currently there are several options available for equipment that is no longer operable, or is otherwise designated for disposal. For equipment with recyclable metals, some disposal companies are paying for this equipment, because they can recover their costs and make a profit, even when paying the waste generator for "scrap metal." In 2001, EPA facilitated the reclassification of electrical equipment making this a cost effective means of removing the risk from PCBs in equipment, while continuing to use the equipment until it no longer functions or is voluntarily removed from service for disposal (Ref. 10).

In 1996, EPA surveyed the PCB disposal industry and found that there was a large capacity surplus (Ref. 35). However, as the PCB disposal market increasingly becomes smaller, it may be that fewer disposers will find it economical to retain licenses and disposal facilities for this small market, decreasing the number of options available and very likely increasing the costs for the remaining options. Any increased cost of fuel employed in many disposal technologies and for the transportation of equipment to disposers will likely also increase disposal costs in the future. The potential increase in disposal costs in the future may make it economically advantageous to either reclassify equipment or dispose of it now, even if it has not reached the end of its useful life.

Owners commented in 1979 that there were few commercial storers for PCB wastes (Ref. 3). Currently, EPA believes that there is an excess of storage capacity. Like disposal, commercial storage capacity could also decrease as the supply of PCB equipment diminishes. EPA seeks information on whether advancing the date of testing from some future disposal date to a date closer to the present time would present cost, economic, or management difficulties or advantages to the owners and operators of PCB-containing equipment.

4. *Information about an increased failure rate of vintage electrical equipment.* A 2002 report, Life Cycle Management of Utility Transformer Assets, by the Hartford Steam Boiler Inspection and Insurance Company, uses information from claims filed by policy holders with the insurer for failed transformers, regardless of whether they contained PCBs (Ref. 23). The information has been used to estimate or predict when equipment will fail, based on historical failures for which claims were filed. This document also highlights that the electricity demand load grew 35% and the transmission capacity grew 18% over the 10 preceding years. EPA is concerned that the rate of failures for transformers manufactured in the 1950s, 1960s, and 1970s may increase substantially in the future. EPA seeks data on the failure rate in the last 10 years and the results and documentation of recent modeling of projections of failures into the future. EPA seeks information on any differences in failure rate for different types of equipment of different vintages, and differences in failure rates for equipment which is located indoors as compared to outdoors and what effect, if any, that electronic monitoring and other maintenance methods have had on failure rates. EPA's questions about failure rates are located in Unit XIV.G.

5. *Severe weather event and other natural disasters increase the potential risk from PCBs.* There have been recent severe weather events (e.g., Hurricane Katrina (Ref. 44), Tornado in Greensburg, KS (Ref. 45)) where there was significant damage to electrical equipment of all ages, both containing PCBs and not containing PCBs. Although there have not been reports of

natural disasters such as earthquakes, mudslides, or volcanic eruptions which resulted in significant spills of PCBs, there is a possibility that this could have occurred in some regions of the country. These unpreventable events contribute to catastrophically ending the useful life of PCB-containing equipment and the uncontrolled release of PCBs. EPA believes that one cost-effective protection against PCB releases from these weather events and natural disasters may be a proactive program to test equipment that is taken out of service for PCBs, and to remove, test, and replace or retrofill equipment in service that is known or assumed to contain PCBs, especially the equipment in locations and areas where a release would present the greatest risk. EPA is also concerned about areas which may not be directly contaminated from nearby equipment ravaged by severe weather, but where spilled PCBs from that weather event might be expected to migrate and accumulate, such as spillways and drinking water reservoirs. Answers to the questions about severe weather events in Unit XIV.H. and other related comments will assist EPA in the reassessment of the use of PCB-containing electrical equipment.

6. *Alternatives to PCB liquids*. One type of information the Agency is soliciting for its proposed rulemaking relates to alternatives to the use of PCBs in liquid-filled equipment. To EPA's knowledge, satisfactory substitutes are available to replace PCBs in all electrical equipment applications. The Agency welcomes comments on the comparative costs and the effectiveness of various substitutes in reducing fires and heat-related degradation or destruction of equipment. EPA seeks information on the hazards and the risks posed by these PCB substitutes. EPA's questions about alternatives to PCB liquids are located in Unit XIV.I.

7. *Removal and replacement costs*. EPA seeks information on the costs of removing and replacing old PCB-containing equipment with new or used non-PCB equipment based on attrition (i.e., end of equipment's useful life) and based on removal in advance of attrition. In particular, EPA would like to have information on:

- How often any equipment (PCB-containing or non-PCB–containing) of the same age or size is replaced per year and the costs for replacement.
- Costs for replacement include cheapest source, foreign, or domestic, including transport and transaction costs.
- The price for replacement of various types and classes of equipment each year over the last 30 years, as well as estimated or projected future prices.

EPA seeks information that explains:

- The impact of changes in system distribution and transmission voltage on the potential obsolescence of mineral oil-filled equipment, which was manufactured before 1979 would be useful.
- The cost impact of replacing mineral oil-filled equipment, which was manufactured before 1979, with more modern equipment with respect to efficiency, longevity, or any other attribute which would create an economic incentive to hasten the phaseout of older equipment.

Further, EPA solicits information on the numbers of these units manufactured before 1979 that are:

- Expected to be replaced or excessed during system voltage changes.
- Planned for distribution in commerce for use. EPA would also like to know to whom these excessed units would most likely be sold.

EPA seeks information on the costs of service interruptions and revenue loss which may result from equipment replacement, either scheduled or unplanned. Similarly, EPA solicits comments on the current and estimated future supply of replacement equipment, when PCB–containing equipment is moved out of service before the end of its useful life. Reclassification options and procedures in the regulations were broadened in 2001 (Ref. 10) and EPA seeks comments on the costs and advantages found for this option, as opposed to disposal. EPA encourages small business owners, and small municipal and cooperative utilities to provide details on their PCB-containing electrical equipment replacement schedules and costs. EPA's questions about PCB equipment removal and replacement costs are located in Unit XIV.J.

8. *Current PCB waste disposal capacity*. EPA solicits comments on the availability of disposal capacity for PCBs in liquids at concentrations ≥ 50 ppm by weight, and for other materials in drained electrical equipment. EPA also seeks comments on the economic benefits of decontamination and recycling of liquids or non-liquids in this equipment, where possible. In 1979, PCB disposal options and capacity were limited and the potential demand on disposal capacity from a ban or phaseout of PCB-containing equipment would have been high. EPA also seeks information on whether there currently is a charge to the equipment owner (waste generator) for disposing of equipment which will be decontaminated and then sold as scrap metal. EPA also seeks information on the cost for disposing of mineral oil contaminated with PCBs. EPA has seen a continuous decrease in the numbers of PCB disposal approvals issued over the last 10 years. EPA seeks comment on what the disposal industry predicts with respect to the future number of approved PCB disposal and storage companies, future disposal and storage capacity, and the future cost of commercial storage and disposal of electrical equipment waste as compared to current disposal costs. EPA's questions about PCB waste disposal capacity are located in Unit XIV.K.

9. *Current equipment management practices*. EPA solicits information on the current management practices intended to reduce the risk from PCBs in the following types of equipment that contain PCBs at concentrations of ≥ 1 ppm: Electrical transformers, railroad transformers, mining equipment, electromagnets, switches, voltage regulators, electrical capacitors, circuit breakers, reclosers, liquid-filled cable, and rectifiers. EPA encourages small business owners, small municipal and cooperative utilities to provide details on their PCB-containing electrical equipment management activities. EPA's questions addressing the information that EPA seeks about equipment current management practices are located in Unit XIV.L.

10. *Electrical equipment which contains non-liquid PCBs at concentrations ≥ 1 ppm*. EPA seeks information on electrical equipment, such as tar-filled equipment, which was manufactured prior to July 31, 1979, in the following categories: Containing non-liquid PCBs at concentrations ≥ 1 ppm and < 50 ppm, ≥ 50 ppm and < 500 ppm, ≥ 500 ppm and < 100,000 ppm, and ≥ 100,000 ppm. EPA seeks this information for the following non-liquid filled equipment types: Transformers, electromagnets, switches, voltage regulators, electrical capacitors, circuit breakers, reclosers, rectifiers, and any other equipment populations (such as paper insulated lead cable and bushings). EPA's questions about electrical equipment which contains non-liquid PCBs at concentrations ≥ 1 ppm are located in Unit XIV.M.

11. *Impact of vandalism and theft on the risk from PCBs*. The presence of PCBs in equipment subject to vandalism incidents could increase potential risk not only to the vandal, but to others in the area. In particular, EPA is concerned about areas which may not be directly contaminated from the nearby equipment impacted by vandalism but also areas where spilled PCBs from that

vandalism might be expected to migrate and accumulate such as low-lying residential neighborhoods and cropland. EPA solicits data on the number of units lost and the cost from losses from vandalism and theft of electrical transformers, railroad transformers, mining equipment, heat transfer systems, hydraulic systems, electromagnets, switches, voltage regulators, electrical capacitors, circuit breakers, reclosers, liquid-filled cable, and rectifiers. EPA seeks information on the rate of occurrence of vandalism events involving PCB-containing equipment in each calendar year starting from 1998 until 2008, including how many gallons of oil have been lost from equipment and what has been the cost from this loss of oil. EPA's questions about the impact of vandalism and theft on the risk from PCBs are located in Unit XIV.N.

12. *Fraudulent export for scrap metal recovery*. EPA is concerned about the potential for incidents where used electrical equipment is exported for purported reuse, but where the equipment is actually scrapped or smelted for recovery of metal components. Elimination of the totally enclosed determination for distribution in commerce will restrict the fraudulent practice of export of equipment in the guise of reuse, when the exported equipment will not be used, properly reclassified/decontaminated, or disposed of in an environmentally sound manner. EPA is concerned that metal recycling facilities may not manage the exported equipment and the PCBs in an environmentally sound manner; and scrap metal management workers may not be protected from exposure to PCBs or even know that PCBs are present in the exported equipment.

13. *Reclassification of askarel transformers*. EPA is concerned that reclassification of askarel transformers (which were manufactured to contain ≥ 500,000 ppm PCBs) is generally ineffective because PCBs leach back out of internal components several years after the active processing to reclassify is completed. This seems plausible because of the nature of the inner structure of transformers. EPA is considering whether to restrict the reclassification option to electrical equipment which at the time of manufacture contains < 10,000 ppm (< 1%) PCBs, based on the inability to drain and flush PCBs efficiently from askarel PCB equipment. EPA's questions about the reclassification of askarel transformers are located in Unit XIV.O.

14. *Registration of PCB large capacitors*. PCBs were formulated at concentrations from about 75 weight percent to about 100 weight percent (or 750,000 ppm to 1,000,000 ppm) in capacitors (Ref. 46). Therefore, the amount of PCBs in the smallest PCB large capacitor, which contains 1.36 kg or 3 lbs. of dielectric fluid, is about 1.02 kg. (or about 2.25 lbs.). There could be as much PCBs of the same PCB formulation in the smallest PCB large capacitor as the approximately the same amount of PCBs in a transformer which contains 600 gallons of 500 ppm PCBs in mineral oil dielectric fluid. The regulations currently require that a mineral oil transformer containing 600 gallons of 500 ppm PCBs and even a much smaller 1–gallon transformer containing 500 ppm of PCBs in mineral oil dielectric fluid to be registered with EPA. In order to protect first responders and others who might potentially be accidentally exposed to PCBs from PCB large capacitors, EPA is assessing whether to require registration of some or all PCB capacitors currently in use with EPA. EPA could publish and post the register of the capacitors on the PCB website as it has the Transformer Registration Database.

B. Railroad Transformers (Regulated at 40 CFR 761.30(b))

At the time of the 1979 rulemaking there were a limited number of PCB transformers used on electric railroad engines and cars. The railroads where the askarel PCB equipment was used were located in the northeastern part of the country, mainly in Pennsylvania, New Jersey, and New York (Ref. 47). Because of the known leakage from this equipment and the requirement for frequent servicing, EPA found that the distribution in commerce of this equipment was not totally enclosed. The leaks from the use of this equipment have resulted in Superfund PCB cleanups of some Southeastern Pennsylvania Transportation Authority (SEPTA) track areas. EPA assumes that by now, all of the PCB railroad transformers have either been removed from service or the dielectric fluid has been replaced and that all railway transformers are now operating with dielectric fluid which contains < 50 ppm PCBs. EPA seeks comments on the continued use of PCBs in railroad transformers, and is considering eliminating the authorization for the use of PCBs in railroad transformers at concentrations greater than 1 ppm. EPA's questions about the railroad transformers are located in Unit XIV.P.

C. Mining Equipment (Regulated at 40 CFR 761.30(c))

In 1978, there were only very limited uses of PCBs in electric motors in fewer than 1,000 mining machines (Ref. 2). The motors were manufactured in the 1960s and early 1970s by one company and used in machinery manufactured by another company. The PCBs were used as a motor coolant. Because of its operating conditions, this equipment must frequently be rebuilt. Based on the small usage in 1979 and the expected relative short life of this limited use population, EPA believes it is likely that PCBs are no longer used in the motors of mining equipment. EPA seeks comments on whether there is any continued use of PCBs in such electric motors in mining equipment and whether EPA should eliminate the authorization for the use of PCBs in mining equipment at concentrations > 1 ppm. EPA's questions about mining equipment are located in Unit XIV.Q.

D. Heat Transfer Systems (Regulated at 40 CFR 761.30(d)) and Hydraulic Systems (Regulated at 40 CFR 761.30(e))

Heat transfer systems and hydraulic systems have been authorized for use since 1984, when they contain PCBs at concentrations < 50 ppm. Because of the common leakage from this equipment and the frequent requirement for servicing, the distribution in commerce of this equipment was not found to be totally enclosed. The regulatory provisions for this equipment at 40 CFR 761.30(d) and (e) have been in place for almost 25 years. EPA seeks information on the number of these units, their types, and how frequently draining and refilling takes place. Because these types of equipment are often serviced by draining and refilling with new PCB-free fluid, EPA believes it is likely that any residual PCBs present in equipment that was in use in 1984, has been diluted through servicing to a concentration far below 50 ppm. There may be no reason to continue an authorization of PCBs in equipment at measurable concentrations. EPA seeks information demonstrating a need to continue to use PCBs in heat transfer systems and hydraulic systems at concentrations greater than 1 ppm.

E. Carbonless Copy Paper (Regulated at 40 CFR 761.30(f))

In 1979, there were many files containing carbonless copy paper. EPA does not have information on whether the information on this 30–year old, thin carbon copy paper is still legible, and if it is not legible, why it cannot be disposed of. Thirty years later it may be

feasible and economical to convert any necessary, legible information and records from carbonless copy paper to a different storage medium. EPA seeks information on the volume of records on carbonless copy paper, the records' locations, and the types of business, government agencies, or other holders of such documents. EPA would like to know whether holders of such documents are smaller or larger businesses, and whether the size or type of the business would affect the economic feasibility of document conversion. EPA seeks comments on whether carbonless copy paper containing PCBs is still in use and whether there is a need to continue the existing use authorization for this paper.

F. Continued Use of Porous Surfaces Contaminated with PCBs Regulated for Disposal by Spills of Liquid PCBs (Regulated at 40 CFR 761.30(p))

EPA is considering changing 40 CFR 761.30(p) to reflect the continued potential risk from contaminated porous surfaces. Persons who are potentially exposed to contaminated porous surfaces should be protected from air emissions, which are not eliminated under the existing use authorizations by encapsulation or metal covers. EPA's questions about the use of contaminated porous surfaces are located in Unit XIV.R.

G. Use in Fluid and Gas Transmission and Distribution Systems (Regulated at 40 CFR 761.30(i), 40 CFR 761.30(s), and 40 CFR 761.30(t))

In comments on the June 7, 1978, proposed rule (Ref. 5), which was finalized in 1979, two natural gas transmission companies claimed that they had PCBs in turbine compressors at concentrations ≥ 50 ppm, but they could not reduce these concentrations to levels < 50 ppm in the near future. One company claimed to have removed all of the PCB turbine oil in 1972. The companies claimed that the PCBs would not leak out of the compressors into other parts of the natural gas pipeline system. In the May 31, 1979 final rule (Ref. 3), EPA prohibited the use of PCBs at concentrations > 50 ppm in natural gas pipeline systems, effective as of May 1, 1980.

In the early 1980s, PCBs were found in a cold trap in the gas line outside a home in New York. In 1981, EPA entered into agreements with 13 natural gas transmission companies which had PCBs at concentrations ≥ 50 ppm in their systems but outside of turbine compressors (Ref. 48).

It is not clear exactly how the PCBs entered the systems if they did not come from the turbine compressors. After nearly 30 years of operations and after all known sources of PCBs were removed from these systems, EPA has information indicating that PCBs at levels ≥ 50 ppm continue to be found in natural gas pipeline systems including within equipment which is not specifically designed to collect such material. EPA believes that the authorized use conditions in the current regulations should have resulted in companies removing PCBs to the extent that there no longer are PCBs in the systems at concentrations ≥ 50 ppm.

EPA is considering requiring sampling and analyzing individual condensate samples (not composites or accumulations) to determine the extent of the PCB contamination when any person finds PCBs in any pipeline system at concentrations ≥ 1 ppm. Owners would be required to analyze condensate from surrounding areas to confirm that regulated PCBs were not present in the system. Regardless of the original or current source of the PCBs, owners would report results of ≥ 50 ppm findings to EPA. EPA is also considering whether to propose ending the use authorization for PCBs at concentrations ≥ 1 ppm in these systems by 2020 or an earlier date. In this phase-down approach, owners would also be required to analyze current condensate in areas having historical PCB measurements to confirm the absence of PCBs during the period prior to the final phaseout date. If PCBs are found, owners would have to demonstrate they have reduced PCB concentrations to < 1 ppm or have implemented engineering controls similar to the current requirements in 40 CFR 761.30(i)(1)(iii)(A)(*4*) to reduce and prevent migration of PCB impacted material. EPA seeks comments on the continued use of PCBs in fluid and gas transmission and distribution systems. EPA's questions about use in gas transmission and distribution systems are located in Unit XIV.S.

EPA has little information on the need to continue the use authorizations at 40 CFR 761.30(s) for air compressor systems and 40 CFR 761.30(t) for other gas or liquid transmission systems. The 10 years that these authorizations have been in place should have allowed owners sufficient time to purge the PCBs from their systems. EPA is considering whether to terminate or significantly limit the duration of these authorizations.

H. Use in Research and Development (Regulated at 40 CFR 761.30(j), Scientific Instruments (Regulated at 40 CFR 761.30(k)), and Decontaminated Materials (Regulated at 40 CFR 761.30(u))

EPA is not currently planning to reassess the authorizations for: Use in research and development, scientific instruments, and decontaminated materials. However, EPA welcomes comments on these use authorizations.

I. No Use Authorization for PCB-Containing Electrical Equipment Parts

There is no use authorization for parts or detached ancillary equipment, such as bushings, for electrical equipment when separate from that equipment. Bushings contain insulating material separated from the primary equipment's insulating fluid. Bushings may be removed from equipment during servicing or transportation. Utilities have told EPA that it is necessary to store bushings for reuse, especially for large transmission electrical equipment. There is no use authorization in 40 CFR part 761, subpart B, for bushings, which are no longer attached to or associated with a specific article of authorized equipment (Ref. 10). EPA seeks information on the feasibility of reclassifying bushings or other ancillary equipment, which can be used as spare parts. EPA seeks information on the economic value of continuing to maintain such PCB-containing parts and ancillary equipment in inventories of utility companies and industrial facilities. EPA's questions about the use of PCB-containing electrical equipment parts are located in Unit XIV.Y.

J. Reassessment of the Possible Authorization of the Use of Some Non-Liquid PCB-Containing Products

The use of PCBs at concentrations of 50 ppm or greater in caulk products, regardless of whether the PCBs were created by an inadvertent chemical reaction during the manufacturing process or were added to the caulk afterward, is not currently authorized under TSCA section 6. EPA requests comments on whether the use of PCBs in caulk should be authorized, and what data or other information is available on which to evaluate the risks and benefits of the use of PCB-containing caulk. EPA's questions about authorization of some non-liquid PCB-containing products are located in Unit XIV.Z.

VIII. Storage for Reuse of PCB Articles (Regulated at 40 CFR 761.35)

EPA established limits on storage of PCB articles for reuse at 40 CFR 761.35. These limits were established to curtail

storage practices which were not in keeping with the statutory objectives of:

1. A general ban on use with limited exceptions.
2. Quick disposal of PCB-containing equipment which was no longer used or usable.
3. Protection of human health and the environment from risks presented by PCBs.

When the PCB regulations were first promulgated in the late 1970's, EPA recognized that it might be necessary to have PCB-containing spare equipment to press into use when other new or reasonably new equipment needed to be replaced. However, nearly 30 years later, the demand for PCB-containing equipment replacements should be much lower. EPA has information indicating that the older unused PCB equipment, now 30 years old or older, does emit PCBs even when sealed and still can leak even when it is not energized. EPA also seeks information about whether stored non-askarel equipment could be reclassified while it is in storage for reuse. EPA also is concerned that equipment, which is stored for reuse outside of a secure storage facility, is more susceptible to potential releases of PCBs to the environment from accidents, both weather-related and the result of the owner's activities, and to vandalism or theft.

EPA seeks information on the location of equipment being stored for reuse, especially in relationship to the equipment it is to replace. EPA seeks information on the economic value of continuing to maintain PCB-containing equipment which is not in use, in inventories of utility companies and industrial facilities. EPA's questions about storage for reuse of PCB articles are located in Unit XIV.T.

IX. Distribution in Commerce of Electrical Equipment (Regulated at 40 CFR 761.20)

PCBs have been measured in the ambient air coming from PCB-containing equipment in storage for disposal in an approved PCB storage facility. Information about the measurement of PCBs in the ambient environment around stored electrical equipment indicates that aging equipment appears to no longer be airtight, even if seemingly "intact and non-leaking" upon cursory visual inspection (Ref. 11). If this stored equipment is not airtight, there must also be releases during use and transportation (distribution in commerce) of this equipment, despite its deenergized state. EPA is also concerned about and seeks information on the frequency of PCB surface contamination on this equipment and the practice of routine inspection for the presence of residual PCB surface contamination on equipment, by using a standard wipe test. For this reason, EPA questions whether the historical determination that distribution in commerce of PCBs in electrical equipment still can be considered totally enclosed in accordance with TSCA section 6(e)(2)(C). Elimination of distribution in commerce of this PCB-containing equipment for reuse could also prevent the fraudulent practice of a guise of resale for reuse. One fraudulent practice is a claim of the export of regulated PCB-containing equipment for reuse to avoid proper domestic reclassification or disposal, when the equipment is intended only for foreign scrap metal recovery. EPA's questions about distribution in commerce are located in Unit XIV.U.

X. Reconsideration of the Use of the 50 ppm Level for Excluded PCB Products, in Particular for PCBs in Caulk

The level of 50 ppm has been used in PCB use regulations since 1979. Based on regulatory history, this number is based almost entirely on economic considerations. There are no traditional exposure and risk assessment calculations (Refs. 3 and 8). EPA seeks comments on the application of the value of 50 ppm as the upper value in the definition of Excluded PCB products in 40 CFR 761.3. One such excluded product is PCBs in caulk where PCBs are present at concentrations < 50 ppm. EPA is seeking comment and any supporting data or other information on whether the number 50 ppm should be changed given the recent realization that the use of PCBs in caulk may be widespread and may be an undue burden for schools if the exclusion continues at 50 ppm. EPA's questions about excluded PCB products are located in Unit XIV.X.

XI. Definitional Changes Under Consideration (Located at 40 CFR 761.3)

EPA is considering proposing changes to the following definitions found at §761.3, and solicits comments on these changes.

A. PCB Articles

The definition of PCB articles in §761.3 includes transformers and capacitors, but it has no mention of size or the volume of liquid contained in the article. EPA is considering changing this definition to regulate equipment containing ≥ 0.05 liters (approximately 1.7 fluid ounces) of dielectric fluid. Definitions for Capacitor, PCB Capacitor, PCB Transformer, and PCB-contaminated Electrical Equipment would be adjusted accordingly. This revision would correspond to minimum volumes for liquid-filled equipment found in the Stockholm Convention.

EPA seeks information on the type and volume of PCB products that would be affected by such changes in the definition, as well as the cost, economic, and other impacts of these changes.

B. Excluded Manufacturing Process

The current definition states, "The concentration of inadvertently generated PCBs in products leaving any manufacturing site or imported into the United States must have an annual average of less than 25 ppm, with a 50 ppm maximum." EPA is considering whether to eliminate the annual average and whether the maximum concentration should be set at < 1 ppm. EPA's questions about excluded manufacturing processes are located in Unit XIV.V.

C. Recycled PCBs

The current definition states, "The concentration of PCBs in paper products leaving any manufacturing site processing paper products or paper products imported into the United States must have an annual average of less than 25 ppm, with a 50 ppm maximum." EPA is considering whether to revise the annual average and whether the maximum should be lowered. Additionally, the definition requires the release of PCBs to ambient air at any point be at concentrations < 10 ppm. EPA is considering whether the maximum allowable PCB concentration released to air should be lowered to be consistent with what the Agency has said about PCB exposures from PCBs in caulk (Ref. 49). EPA's questions about recycled PCBs are located in Unit XIV.W.

D. Quantifiable Level/Level of Detection

In the years since this definition was first promulgated, analytical measurement technology has improved so that the current quantitation level/level of detection is lower. Currently, the quantitation level in mineral oil can be as low as, or lower than, 1 ppm and the level of detection can be as low as, or lower than, 0.5 ppm. The quantitation level and level of detection in other media such as air and water can be three orders of magnitude or more lower than the values for mineral oil. EPA is evaluating whether to change this definition to reflect to most current science, and solicits any information regarding such a change.

XII. Marking of All PCB Articles

EPA is considering requiring marking of all PCB articles, which includes electrical equipment containing ≥ 50 ppm PCBs, and all storage areas. Some ≥ 50 ppm PCBs items are already required to be marked in 40 CFR 761.40:

- Above-ground sources of PCB liquids in natural gas pipeline systems.
- PCB containers.
- Electric motors using PCB coolants.
- Hydraulic systems using PCB hydraulic fluid.
- PCB heat transfer systems.
- PCB article containers.
- Areas used to store PCBs and PCB items for disposal.
- Transportation vehicles transporting more than 45 kg or 99.5 lbs of items containing ≥ 50 ppm liquids, containers of ≥ 50 ppm liquids, or one (or more) PCB transformers.

EPA discussed concerns about PCB releases from liquid-filled equipment, regardless of concentration, during natural disasters in Unit VII.A.5. The consequences of natural disasters and other events such as automobile collisions with equipment and vandalism (e.g., shots from firearms), may be more significant when damaging older and over-loaded electrical equipment. In addition to those persons who might be accidentally exposed, it is important that public emergency responders as well as owners/maintainers be advised of the PCB content of PCBs in use or those catastrophically released from use as quickly as possible. In addition, residents and the public in proximity to regulated equipment have the right to know of the presence of PCBs. Many owners already know the locations of and have already marked PCB-contaminated equipment. EPA believes that marking of PCB-contaminated equipment also aids in planning management of equipment during transportation and storage for disposal. A possible requirement under consideration is for owners to locate and label PCB-contaminated equipment. This would require an owner to take additional labeling action beyond what is required in the current regulations for the use of PCB-contaminated equipment and the assumptions in 40 CFR 761.2. Once equipment was marked for use, it would not need to be re-marked at the time of disposal. In Unit XIV.A.–E., M., P., Q., and S. EPA has asked for specific numbers of PCB-contaminated equipment and the size of populations of equipment which is assumed by regulation to contain PCBs ≥ 50 ppm.

XIII. Public Participation

In addition to the requests for information and comments contained in this document, EPA intends to involve stakeholders through a series of public meetings taking place in locations across the country. The purpose of these meetings is to receive stakeholder comments on the issue of EPA's reassessment of PCB use authorizations, including the questions described in Unit XIV.

A. Meeting Dates and Locations

The meetings will be held as follows:

1. New York, NY, May 4, 2010, from 1 p.m. to 5 p.m. at EPA Region 2 offices, Room 2735, Conference Room A (27th Floor), 290 Broadway.
2. Chicago, IL, May 18, 2010, from 1 p.m. to 5 p.m., at the EPA Region 5 offices, Lake Michigan Room (12th Floor), 77 West Jackson Blvd.
3. Atlanta, GA, May 25, 2010, from 1 p.m. to 5 p.m., at EPA Region 4 offices, Rooms 9D and 9E, Sam Nunn Atlanta Federal Center, 61 Forsyth St., SW.
4. Washington, DC, May 27, 2010, from 1 p.m. to 5 p.m., at EPA Headquarters, EPA East, Room 1153, 1201 Constitution Ave., NW.

B. Meeting Procedures

For additional information on the scheduled meetings, please see the PCB website (*http://www.epa.gov/epawaste/hazard/tsd/pcbs/index.htm*) or contact Christine Zachek at (202) 566–2219 or *zachek.christine@epa.gov*.

The meetings will be open to the public. To ensure that all interested parties will have an opportunity to comment in the allotted time, oral presentations or statements will be limited to 10 minutes. EPA therefore recommends that stakeholders who present oral comments also submit written comments following the instructions provided under **ADDRESSES**. Interested parties are encouraged to contact the technical person at least 10 days prior to the meeting to schedule presentations. Since seating for outside observers will be limited, those wishing to attend the meetings as observers are also encouraged to contact the technical person at the earliest possible date, but no later than 10 days before the meetings, to ensure adequate seating arrangements.

To request accommodation of a disability, please contact Christine Zachek at (202) 566–2219 or *zachek.christine@epa.gov*, preferably at least 10 days prior to the meeting, to give EPA as much time as possible to process your request.

XIV. Request for Comment and Additional Information

EPA invites public comment and any additional information in response to the questions identified in Unit XIV.A through Unit XIV.AA. Unit I.B. contains a description of points commenters should consider when preparing comments for submission to EPA, including how to submit any comments that contain CBI. No one is obliged to respond to these questions, and anyone may submit any information and/or comments in response to this request, whether or not it responds to every question in this unit.

A. Populations of Transformers (Containing Greater Than 2 Fluid Ounces of Dielectric Fluid)

1. What percentage of your entire transformer inventory in use or storage for reuse was manufactured each year between 1950 and 1980, all years up to 1949, and all years from 1981 to date? If this information is not available, please provide alternative information, such as: What percentage of the entire transformer inventory is 30 years old, 40 years old, and 50 years old?
2. Of the inventory information provided in the previous question, how does the percentage differ for the following applications: Transmission, substation, pole top, and pad mount?
3. What percentage of your transformer population consists of PCB transformers? How many units are in this population? How does the percentage and population compare for major interstate utilities, municipal utilities, cooperative utilities, industrial owners, and other groups?
4. What percentage of your transformer population consists of PCB-contaminated transformers? How many units are in this population? How does the percentage and population compare for major interstate utilities, municipal cooperatives, industrial owners, and other groups?
5. For electrical utilities and other owners, have you tested all potentially (based on year of manufacture and other information) contaminated equipment? Do you know where all regulated PCB equipment is currently located? Have you removed all askarel containing PCB transformers? Have you removed all mineral oil containing PCB transformers? Have you removed all mineral oil containing PCB-contaminated transformers?
6. What percentage of the transformer population consists of transformers which contain measurable PCBs between 1 and 50 ppm and were manufactured before July 31, 1979? How

many units are in this population? How does the percentage and population compare for major interstate utilities, municipal cooperatives, industrial owners, and other groups?

7. What would be the difference in cost (and why) for removing within 10 years the PCBs from the transformers through reclassification and disposing of the transformers, versus disposing of the transformers without reclassification at the end of their useful life?

8. How much equipment is being used indoors? How much equipment is being used outdoors?

9. Geographically and topographically exactly where, in the form of global positioning system coordinates or maps, is the PCB-containing equipment located? What is the age of the PCB-containing equipment at each of these locations?

10. What active or passive safety systems and equipment are installed and operating for PCB-containing equipment, including dikes, berms, safety valves, expansion chambers, remote monitoring systems and capture basins?

B. Populations of Electromagnets, Switches, and Voltage Regulators (Containing Greater Than 2 Fluid Ounces of Dielectric Fluid)

1. What percentage of your entire electromagnets, switches, and voltage regulators inventory in use or stored for reuse was manufactured each year between 1950 and 1980, all years up to 1949, and all years from 1981 to 2007? If this information is not available, please provide alternative information, such as: What percent of the entire transformer inventory is 30 years old, 40 years old, and 50 years old?

2. What percentage of the electromagnets, switches, and voltage regulators population contains dielectric fluid with PCB concentrations ≥ 50 ppm PCB? How many units are in each population? How does the percentage and population compare for major interstate utilities, municipal cooperatives, industrial owners, and other groups?

3. The original use authorization for electromagnets was for a very restricted number of known applications in coal mine processing operations. How many electromagnets in these coal mining operations still use PCBs?

4. For electrical utilities and other owners, have you tested all potentially (based on year of manufacture and other information) contaminated electromagnets, switches, and voltage regulators? Do you know where all regulated PCB-containing electromagnets, switches, and voltage regulators are currently located? Have you removed all askarel containing PCB electromagnets, switches, and voltage regulators? Have you removed all mineral oil containing PCB electromagnets, switches, and voltage regulators? Have you removed all mineral oil containing PCB-contaminated electromagnets, switches, and voltage regulators?

5. What would be the difference in cost (and why) for removing the PCB-containing electromagnets, switches, and voltage regulators and disposing of them within 10 years, versus disposing of the electromagnets, switches, and voltage regulators at the end of their useful life?

6. How much equipment is being used indoors? How much equipment is being used outdoors? Geographically and topographically exactly where, in the form of global positioning system coordinates or maps, is the PCB-containing equipment located?

7. What is the age of the PCB-containing equipment at each of these locations?

8. What active or passive safety systems and equipment is installed and operating, including dikes, berms, safety valves, expansion chambers, and capture basins?

C. Populations of Electrical Capacitors (Containing Greater Than 2 Fluid Ounces of Dielectric Fluid)

1. What percentage of your entire capacitor inventory in use or stored for reuse was manufactured each year between 1950 and 1980, all years up to 1949, and all years from 1981 to 2007? If this information is not available, please provide alternative information, such as: What percentage of the entire transformer inventory is 30 years old, 40 years old, or 50 years old?

2. How does the percentage differ of these 30, 40, and 50 year-old and older capacitors for the following applications: Transmission, substation, pole top, and pad mount?

3. What percentage of the total capacitor population is made up of PCB large capacitors? How many units are in this population? How does the percent and population compare for major interstate utilities, municipal cooperatives, industrial owners, and other groups?

4. What percentage of your capacitor population is PCB-contaminated? How many units are in this population? How does the percentage and population compare for major interstate utilities, municipals cooperatives, industrial owners, and other groups?

5. For electrical utilities and other owners, have you tested all potentially (based on year of manufacture and other information) contaminated equipment? Do you know where all regulated PCB equipment is currently located? Have you removed all askarel containing PCB capacitors? Have you removed all mineral oil containing PCB capacitors? Have you removed all mineral oil containing PCB-contaminated capacitors?

6. What would be the difference in cost (and why) for removing the regulated PCB capacitors and disposing them within 10 years as opposed to at the end of the useful life of the capacitors?

7. How many PCB capacitors which are still in active use (not stored for reuse) contain ≥ 2 ounces of dielectric fluid and < 3 lbs. of dielectric fluid?

8. What is the best way to determine whether a capacitor contains ≥ 2 ounces of dielectric fluid other than reading a nameplate or actually draining and weighing the dielectric fluid?

9. What are the most likely minimum dimensions of a capacitor, which contains 2 or more ounces of PCB dielectric fluid?

10. What percentage of the total population of PCB capacitors that are currently in use contain ≥ 0.05 liters (or approximately 1.7 fluid ounces) of dielectric fluid and 1.36 kg. (< 3 lbs.) of dielectric fluid?

11. What would be the difference in cost (and why) for removing within 10 years the PCBs from the PCB capacitors and disposing of them versus disposing of the PCB capacitors at the end of their useful life?

12. How much equipment is being used indoors? How much equipment is being used outdoors? Geographically and topographically exactly where, in the form of global positioning system coordinates or maps, is the PCB-containing equipment located?

13. What is the age of the PCB-containing equipment at each of these locations?

14. What active or passive safety systems and equipment is installed and operating, including dikes, berms, safety valves, expansion chambers, and capture basins?

D. Populations of Circuit Breakers, Reclosers, and Liquid-filled Cable (Containing Greater Than 2 Fluid Ounces of Dielectric Fluid)

1. What percentage of circuit breakers, reclosers, and liquid-filled cables inventory in use or stored for reuse was manufactured each year between 1950 and 1980, all years up to 1949, and all years from 1981 to 2007? If this information is not available, please provide alternative information, such as:

What percent of the entire transformer inventory is 30 years old, 40 years old, and 50 years old?

2. What percentage in each population of your circuit breakers, reclosers, and liquid-filled cable population contains dielectric fluid with PCB concentrations ≥ 50 ppm is PCB? How many units are in each population?

3. For electrical utilities and other owners, have you tested all potentially contaminated breakers, reclosers, and liquid-filled cables? Do you know where all regulated PCB breakers, reclosers, and liquid-filled cables are currently located? Have you removed all circuit breakers, reclosers, and liquid-filled cables containing mineral oil with ≥ 50 ppm PCBs-contaminated circuit breakers, reclosers, and liquid-filled cables?

4. What would be the difference in cost (and why) for removing within 10 years the PCB breakers, reclosers, and liquid-filled cables and disposing of them versus disposing of the PCB breakers, reclosers, and liquid-filled cables at the end of their useful life?

5. How much equipment is being used indoors? How much equipment is being used outdoors? Geographically and topographically exactly where, in the form of global positioning system coordinates or maps, is the PCB-containing equipment located?

6. What is the age of the PCB-containing equipment at each of these locations?

7. What active or passive safety systems and equipment is installed and operating, including dikes, berms, safety valves, expansion chambers, and capture basins?

E. Populations of Rectifiers (Containing Greater Than 2 Fluid Ounces of Dielectric Fluid)

1. What percentage of your rectifiers inventory in use or stored for reuse was manufactured each year between 1950 and 1980, all years up to 1949, and all years from 1981 to 2007? If this information is not available, please provide alternative information, such as: What percentage of the entire rectifier inventory is 30 years old, 40 years old, and 50 years old?

2. What percentage of your rectifier population contains dielectric fluid with PCB concentrations ≥ 50 ppm PCBs? How many units are in this population?

3. What percentage of your rectifier population is PCB-contaminated? How many units are in this population?

4. For electrical utilities and other owners, have you tested all potentially contaminated rectifiers? Do you know where all regulated PCB rectifiers are currently located? Have you removed all askarel PCB rectifiers? Have you removed all rectifiers containing mineral oil with ≥ 500 ppm PCBs? Have you removed all rectifiers containing mineral oil with ≥ 50 ppm and < 500 ppm PCBs?

5. What percent of electrical utilities and other owners has removed all mineral oil PCB rectifiers?

6. What percent of electrical utilities and other owners has removed all mineral oil PCB-contaminated rectifiers?

7. What would be the estimated cost (and why) for removing these PCB rectifiers and disposing of them within 10 years as opposed to at the end of the useful life of the rectifiers?

8. How much equipment is being used indoors? How much equipment is being used outdoors? Geographically and topographically exactly where, in the form of global positioning system coordinates or maps, is the PCB-containing equipment located?

9. What is the age of the PCB-containing equipment at each of these locations?

10. What active or passive safety systems and equipment is installed and operating, including dikes, berms, safety valves, expansion chambers, and capture basins?

F. Servicing

1. How long does servicing extend the useful service life of each type of equipment?

2. How does servicing alter the likelihood of equipment failures?

3. How does servicing change the ultimate likelihood of the release of PCBs?

G. Failure of Vintage PCB-Containing Electrical Equipment

1. How do failure rates differ for equipment which has been rebuilt or serviced in particular ways, relative to equipment that remains substantially as it was originally installed?

2. EPA seeks information to project the rate, location, and amount of PCB releases, and the causes of the releases. For example, what are the risks of failure involving electrical surges, insulation failure, or electrical fires as compared to the rupture of the tanks containing the PCBs?

3. What percentage of the entire transformer inventory, which was in use or storage for reuse and which was manufactured before July 31, 1979, failed in the following time periods:

a. All years between January 1, 1940 and December 31, 1949;

b. Each year between 1950 and 1980; and

c. All years between January 1, 1981 and December 31, 2008?

4. If this information is not available, please provide information for alternate time intervals.

5. What forms of preventive maintenance or remote monitoring are used to warn owners or operators of a potential or impending equipment failure?

6. With respect to a company's PCB-containing equipment, on what equipment are these or other preventive maintenance or remote monitoring techniques employed?

7. For drainable and refillable mineral oil containing PCB articles, how do the purchase price and operational costs for this approach compare to reclassification for transformers or reclassifiable equipment?

8. How do failure rates differ for equipment which has been rebuilt or serviced in particular ways, compared to equipment that remains substantially as it was originally installed?

9. What have been and are the insurance costs for the replacement of failed PCB-containing equipment and cleanup of PCB spills from this equipment over the past 30 years?

10. How would these insurance costs for the replacement of failed PCB-containing equipment and cleanup of PCB spills from this equipment be expected to change in the next 20 years?

H. Damage to Equipment During Severe Weather Events

1. What kind of steps can be taken to prevent release of dielectric fluid from damage during adverse severe weather events such as hurricanes, tornados, floods, and earthquakes?

2. What is the cost per unit of these steps compared to the cost of: Removal and disposal of askarel containing units; or reclassification or removal and disposal of the mineral oil containing units?

3. What is the cost to cleanup an average catastrophic weather release of dielectric fluid and the disposal of the waste and the equipment plus any damages to private or public property?

4. How does this cleanup and related costs compare to the cost of: Removal and disposal of askarel containing units; or reclassification or removal and disposal of the mineral oil containing units?

5. What have been and are the insurance costs as the result of damage from severe weather events for the replacement of failed PCB-containing equipment and cleanup of PCB spills from this equipment over the past 30 years?

6. How would these insurance costs as the result of damage from severe weather events for the replacement of failed PCB-containing equipment and cleanup of PCB spills from this equipment be expected to change in the next 20 years?

7. How has the weather-related liability insurance cost changed for owners of PCB-containing equipment over the last 30 years? Over the last 20 years? Over the last 5 years?

8. EPA seeks information on the rate of occurrence of severe weather events involving PCB-containing equipment in each calendar year starting from 1998 until 2008:

a. What types of equipment were involved?

b. Where was the equipment located (indoors or outdoors)?

c. Did spills occur as a result of the severe weather events?

d. What was the amount released in gallons of liquid, and if PCBs were presents what was the concentration in ppm?

e. How much liquid was contained and recovered?

f. What human health or environmental exposure and effects were observed or recorded?

g. How were the exposures and effects estimated or measured?

I. Alternatives to PCB Liquids

1. What are the PCB substitutes currently available commercially?

2. What are the human health and environmental effects of exposure to PCB substitutes when they are released to the environment?

3. What are the human health and property damage risks due to the flammability properties of the PCB substitutes?

4. What is the likelihood that equipment containing the PCB substitutes have releases of the substitute materials, compared with the likelihood that equipment containing PCBs have releases of PCBs?

5. What other information about PCB substitutes is available that would inform EPA's consideration of the trade-offs that would be required by a PCB phaseout?

J. Removal and Replacement Costs

1. How many PCB liquid disposal companies have been operating at the end of each year for the last 10 years?

2. How many PCB equipment (drained or undrained) disposal companies have been operating at the end of each year for the last 10 years?

3. What has the average disposal cost been for a gallon of PCB oil containing ≥ 50 ppm and < 500 ppm at the end of each year for the last 10 years?

4. What has been the average disposal cost for a gallon PCB oil containing from ≥ 500 ppm to ≤ 10,000 ppm at the end of each year for the last 10 years?

5. What has been the average disposal cost for a gallon or of askarel oil containing > 100,000 ppm PCBs at the end of each year for the last 10 years?

6. What has been the average cost per ton for disposing of drained, oil-filled equipment, which contained ≥ 50 ppm and < 500 ppm PCB at the end of each year for the last 10 years?

7. What has been the average cost per ton for disposing of drained, oil-filled equipment which contained ≥ 500 ppm PCB at the end of each year for the last 10 years?

8. What has been the average cost per ton for disposing of drained askarel-filled equipment > 100,000 ppm PCB at the end of each year for the last 10 years?

9. What has been the average cost per pound, per ton, or per kilovolt amp (KVA) been for recycling the metal from drained oil-filled transformers which contained ≥ 50 ppm and < 500 ppm PCB at the end of each year for the last 10 years?

10. What sorts of incentives might enable organizations with limited budgets to remove regulated PCBs and PCB equipment for their systems and facilities?

K. PCB Waste Disposal Capacity

1. What has been the permitted PCB disposal capacity for liquid PCBs for companies which have been operating at the end of each year for the last 10 years?

2. At what average percent of permitted PCB disposal capacity have the PCB liquid disposal companies operated per year for the last 10 years?

3. What has been the permitted PCB disposal capacity for drained PCB equipment for companies which have been operating at the end of each year for the last 10 years?

4. At what average percent of permitted PCB disposal capacity have the drained PCB equipment disposal companies operated per year for the last 10 years?

5. For a transformer containing 100 gallons of 250 ppm oil, how does the cost compare for:

a. Reclassifying to a non PCB transformer (draining, refilling with new/clean oil, and disposing of the PCB oil and reusing the transformer)? Reclassifying to a transformer containing < 1 ppm PCBs?

b. Disposing of the oil and landfilling the drained transformer?

c. Disposing of the oil and recovering the metal for recycling?

L. Current Management Practices for Equipment (Other Than Equipment Included in Unit XIV.A.-F.)

1. If you are a PCB equipment owner, which of the following have you completed:

a. Identified all PCB-containing equipment?

b. Routinely tested equipment for its PCB content?

c. Tested all equipment known or assumed to contain PCBs?

d. Reclassified known PCB equipment or equipment, which is newly tested and found to be positive for PCBs?

e. Disposed of, without recycling metals, known PCB equipment, or equipment which is newly tested and found to be positive for PCBs?

f. Disposed of, to include recycling metals, known PCB equipment, or equipment which is newly tested and found to be positive for PCBs?

g. Distributed in commerce to someone else for use known PCB equipment, or equipment which is newly tested and found to be positive for PCBs?

h. Recorded the locations of all equipment or a particular type of equipment, such as transformers or capacitors, containing > 500 ppm PCBs?

i. Recorded the locations of all of a particular type of equipment, such as transformers containing > 50 ppm PCBs?

j. Recorded the locations of all of a particular type of equipment, such as transformers containing > 1 ppm PCBs?

k. Tested all mineral oil containing equipment, or a particular type of equipment (such as transformers), which was manufactured before 1979?

l. Labeled all PCB-containing equipment, even though PCB equipment containing < 500 ppm is not required to be marked?

m. Removed from service and disposed of all PCB-containing equipment or a particular type of equipment (such as PCB-contaminated transformers or PCB large capacitors)?

2. What are the costs associated with such activities in question No. 1 in Unit XIV.L.?

3. What are the costs of the practice of preventive maintenance and the re-building of equipment to meet changing service requirements and/or industry or company codes?

4. How well does preventive maintenance or rebuilding effect extension of the expected service life of equipment?

M. Equipment Containing Non-liquid PCBs

1. What is the total number of units (liquid filled plus non-liquid filled) in

each equipment category, such as transformers?

2. What total number of non-liquid units in each equipment category, such as transformers, is in each of these PCB concentration ranges: ≥ 1 ppm and < 50 ppm, ≥ 50 ppm and < 500 ppm, ≥ 500 ppm and < 100,000 ppm, and ≥ 100,000 ppm?

For example, fill in the following table:

Category	Total number of liquid filled plus non-liquid filled units in population	Number of non-liquid filled units with ≥ 1 parts per million (ppm) and < 50 ppm PCBs	Number of non-liquid filled units with ≥ 50 ppm and < 500 ppm PCBs	Number of non-liquid filled units with ≥ 500 ppm and < 100,000 ppm PCBs	Number of non-liquid filled units with ≥ 100,000 ppm PCBs
Transformers	1,000	0	2	0	0
Capacitors	200	0	0	0	10
Etc.					

3. What is the difference in the locations used for liquid filled units, versus non-liquid filled units located?

4. How much does it cost to test (sample collection, extraction, chemical analysis, and recordkeeping) non-liquid filled equipment to determine the PCB concentration?

5. Other than chemical analysis, what methods (such as application type, nameplate, model number, manufacturer name, etc.) can be used to identify PCB containing non-liquid filled equipment?

N. Damage Due to Vandalism or Theft

1. What types of equipment were involved?

2. Where was the equipment located (indoors or outdoors)? Did spills occur as a result of the vandalism?

3. What was the amount released in gallons of liquid, and if PCBs were present what was the concentration in ppm?

4. How much liquid was contained and recovered?

5. What human health or environmental exposure and effects were observed or recorded?

6. How were the exposures and effects which were reported in response to question No. 5 in Unit XIV.N. estimated or measured?

7. What have been and are the insurance costs as the result of vandalism or theft for the replacement of failed PCB-containing equipment and cleanup of PCB spills from this equipment over the past 30 years?

8. How would these insurance costs as the result of vandalism or theft for the replacement of failed PCB-containing equipment and cleanup of PCB spills from this equipment change in the next 20 years?

O. Reclassification of Askarel Transformers

1. If you have attempted to reclassify an askarel-filled unit and have been unsuccessful, how long did you spend draining and refilling and how many times did you drain and refill when PCBs still "leached back" to a concentration ≥ 500 ppm for each unit?

2. What was the cost of each unsuccessful reclassification?

3. How many askarel transformers or other askarel PCB articles (such as voltage regulators) have you reclassified successfully to PCB-contaminated status or non-PCB status?

4. For each piece of successfully reclassified askarel-filled equipment, how many times was it necessary to drain and refill the equipment?

5. For each piece of successfully reclassified askarel-filled equipment, if the equipment was also flushed, what flushing procedure did you use?

6. For each piece of successfully reclassified askarel-filled equipment, how long did it take to reclassify the equipment from the first drain and refilling to a permanent PCB measurement at the new regulatory status of PCB-contaminated or non-PCB? How often was reclassification later proven to be unsuccessful, because PCBs leached back above the target reclassification level?

7. What was the cost of each successful reclassification?

P. Railroad Transformers

1. In what railroad systems are PCB transformers and PCB-contaminated transformers still in use as railroad transformers?

2. What percentage of railroad transformers are PCB transformers?

3. How many railroad transformers are PCB transformers?

4. What percentage of railroad transformers are PCB-contaminated transformers?

5. How many railroad transformers are PCB-contaminated transformers?

6. What is the expected life of a transformer now in service as a railroad transformer before it requires routine servicing of the dielectric fluid?

7. What would be the difference in cost (and why) for removing within 10 years the PCBs from the railroad transformers through reclassification and disposing of them versus disposing of the railroad transformers without reclassification at the end of their useful life?

Q. Mining Equipment

1. At what locations and for what applications are PCBs currently used in mining equipment?

2. What percent of these pieces of equipment, which are found in these applications, contain PCBs?

3. How many pieces of equipment in these applications contain PCBs?

4. What would be the difference in cost (and why) for removing within 10 years the PCBs from the mining equipment and disposing of them versus disposing of the mining equipment at the end of their useful life?

R. Use of Contaminated Porous Surfaces

1. What has the average per ton, drum, or cubic yard disposal cost been to dispose of contaminated non-liquid material (such as soil or concrete) from a spill of PCB oil containing ≥ 50 ppm each year for the last 10 years? Please differentiate costs based on PCB concentration (e.g., < 50 ppm PCB waste, ≥ 50 ppm, etc.) and based on type of disposer (e.g., landfill, incinerator, etc.).

2. How often is there a planned major outage to equipment mounted on concrete pads or floors? How long is such a planned outage?

S. Use in Natural Gas Transmission and Distribution Systems

1. How many gallons of ≥ 50 ppm condensate have been removed and disposed of annually from natural gas pipelines owned by each individual gas transmission company and distribution company starting in 1998?

2. Do transmission companies regularly test the condensate for PCBs? If so, what is done with the PCBs when found?

3. What locations in the system have the most condensate removed?

4. What time of year is most condensate removed?

5. How do natural gas transmission and distribution companies test for PCBs in dry systems?

T. Storage for Reuse of PCB Articles

1. How many pieces of in-use equipment are the stored equipment items being kept to replace?

2. Where is the equipment which is to be replaced by the stored equipment located with respect to other potential indoor secure storage areas?

3. What is the historical lifetime and turnover (removal from storage for disposal) rate per year of the in-use equipment?

4. When do owners plan to replace this in-use equipment with non-PCB equipment or reclassify this in-use equipment?

5. When do owners plan to replace the stored equipment with non-PCB equipment or reclassify this stored equipment?

6. What is the annualized cost of storing and managing this equipment?

7. What would be the cost of replacement of this equipment?

8. What would be the cost of reclassifying this equipment, where authorized?

9. What is the likelihood and consequences of service interruptions and loss of revenue if these replacement devices were not available at the site of the equipment to be replaced?

10. What is the history (number of occurrences, dates, amounts and cost to clean up) of spills or other releases of PCBs from this equipment, which is being stored for reuse?

U. Distribution in Commerce

1. What is the annual sale price or dollar value and what is the number of units which were distributed in commerce each year over the last 5 years of used but working askarel-filled equipment?

2. What is the annual sale price or dollar value and what is the number of units which were distributed in commerce each year over the last 5 years of used but working mineral oil filled PCB (≥ 500 ppm) equipment?

3. What is the annual sale price or dollar value and what is the number of units which were distributed in commerce each year of used but working mineral oil filled PCB-contaminated (≥ 50 ppm and < 500 ppm) equipment?

4. How many units of regulated PCB-electrical equipment were sold each year over the last 5 years for domestic scrap metal recovery?

5. How many units of regulated PCB-electrical equipment were sold each year over the last 5 years for foreign scrap metal recovery?

6. How many units of regulated PCB-electrical equipment were exported for use each year over the last 5 years for use?

7. What has been the average purchase price of a new or rebuilt (PCB-free) 100 KVA mineral oil filled transformer and a new (PCB-free) 100 KVAR capacitor every year over the last 10 years?

8. How different is the average purchase price of new or rebuilt (PCB-free) larger or smaller transformers and capacitors?

9. What is the average number of days between an order and delivery for a new or rebuilt replacement PCB-free 100 KVA transformer and a new replacement PCB-free 100 KVAR capacitor every year over the last 10 years?

10. How long does it take for a delivery for a replacement for a new or rebuilt PCB-free large (> 250 KVA) transformer, a smaller (< 250 KVA) transformer, and larger (> 1.36 kg [3 lbs.] of dielectric fluid) capacitors?

V. Excluded Manufacturing Processes

1. How many excluded manufacturing processes are currently operating or, if not currently operating, expect to be operating in the next 5 years?

2. What is the estimated total annual weight in tons of PCBs produced each year over the last 5 years and in the next 5 years in each of the following categories: Products, solid waste, waste water, and air emissions?

3. What are the type and volume of PCB products that would be affected by such changes in the definition, as well as the cost, economic, and other impacts of these changes?

W. Recycled PCBs

1. In any of the last 5 years have you anyone found PCBs at concentrations ≥ 1 ppm in recycled paper? How often? What was the source of the feedstock paper?

2. What steps can be taken or have been taken to reduce the PCB concentration in recycled paper?

3. What is the cost of implementing these steps to reduce the PCB concentration in recycled paper if they have not already been implemented?

4. What are the type and volume of PCB products that would be affected by a potential change in the definition of recycled paper (required to contain less than 1 ppm PCBs), as well as the cost, economic, and other impacts of these changes?

X. Reconsideration of the Use of the 50 ppm Level for Excluded PCB Products (e.g., Caulk)

1. What should the maximum PCB concentration, if any, be for the "excluded PCB products" as defined in 40 CFR 761.3?

2. What should the minimum PCB concentration be for the "excluded PCB products" as defined in 40 CFR 761.3?

3. Should there be a new separate use authorization for certain currently excluded PCBs found in certain products such as paint, gaskets, or caulk?

4. What types of non-liquid products (adhesives, caulk, coatings, grease, paint, rubber/plastic electrical insulation, gaskets, sealants, waxes, etc.), which were manufactured before 1979 and are currently in use, contain PCBs at concentrations between 1 ppm and 50 ppm?

5. What types of liquid products (pump oil, solvent, or other fluid), other than those authorized for use in 40 CFR 761.30, contain PCBs at concentrations between 1 ppm and 50 ppm?

6. For each class of non-liquid and liquid product, what percent of the overall product market share is taken by the PCB-containing product?

a. What is the estimated total weight or volume of each type of product in current use?

b. What kinds of use has each product been applied to, on, or in?

c. What is the geographic distribution of each product use?

d. What is the average expected lifetime of the product?

e. When would the product normally be replaced as part of preventive maintenance?

Y. Use of PCB-Containing Electrical Equipment Parts

1. What PCB-containing spare parts, such as bushings and other ancillary equipment, are currently needed for what equipment?

2. What is the feasibility of reclassifying PCB-containing spare parts?

3. What is the annualized cost of storing and managing PCB-containing spare parts?

4. What would be the cost of replacement of PCB-containing spare parts?

5. What are the likelihood and consequences of service interruptions and loss of revenue if the PCB-containing spare parts were not available?

6. Where are these spare parts located geographically in relation to the equipment they will be used on?

7. In what industrial or commercial settings can the equipment, which the spare parts will be used on, be found?

Z. Reassessment of the Possible Authorization of the Use of Some Non-Liquid PCB-Containing Products

1. What comments can you provide that will inform EPA as to whether to authorize or not authorize the use of caulk, paint, or other non-liquid PCB product at concentrations exceeding the level of 50 ppm currently provided in the PCB regulations for excluded PCB products?

2. What data or other information is available on which to evaluate the risks and benefits of the use of PCB-containing caulk, paint, or other non-liquid PCB product?

3. What PCB concentrations should be authorized for the use of PCB-containing caulk, paint, or other non-liquid PCB products?

AA. PCBs on Maritime Vessels

1. In what vessel systems is PCB-containing equipment still in use on vessels?

2. What percentage of vessel equipment uses liquid PCBs?

3. What percentage of vessel equipment uses non-liquid PCBs?

4. What is the expected life of equipment containing PCBs on vessels now in service before it requires routine servicing?

5. What is the difference in the locations used for liquid filled equipment, versus non-liquid filled equipment located?

6. How much does it cost to identify and test (sample collection, extraction, chemical analysis, and recordkeeping) liquid filled equipment and/or non-liquid filled equipment on vessels to determine the PCB concentration?

7. Other than chemical analysis, what methods (such as application type, nameplate, model number, manufacturer name, etc.) can be used to identify PCB-containing equipment?

8. Do non-liquid PCBs enclosed in cabling pose any greater risk to the health of the public than liquid PCBs enclosed in cabling?

9. Should the "totally enclosed" exemption accorded to liquid PCBs enclosed in cabling be extended to solid PCBs?

XV. References

As indicated under **ADDRESSES**, a docket has been established for this rulemaking under docket ID number EPA–HQ–OPPT–2009–0757. The following is a listing of the documents that are specifically referenced in this document. The docket includes these documents and other information considered by EPA in developing this ANPRM, including documents that are referenced within the documents that are included in the docket, even if the referenced document is not physically located in the docket. For assistance in locating these other documents, please consult the technical person listed under **FOR FURTHER INFORMATION CONTACT**.

1. Hutzinger, O.; Safe, S.; and Zitko, V. Chemistry of PCBs. Robert E. Krieger Publishing Company. 1983.

2. EPA. Microeconomic Impacts of the Proposed "PCB Ban Regulation." EPA 560/6–77–035.

3. EPA. Polychlorinated Biphenyls (PCBs) Manufacturing, Processing, Distribution in Commerce, and Use Prohibitions; Final Rule. **Federal Register** (44 FR 31514, May 31, 1979) (FRL–1075–2).

4. EPA. Polychlorinated Biphenyls (PCBs), Toxic Substances Control; Notice. **Federal Register** (42 FR 65264, December 30, 1977) (FRL–837–1).

5. EPA. Polychlorinated Biphenyls (PCBs) Manufacturing, Processing, Distribution in Commerce, and Use Bans; Proposed Rule. Federal Register (43 FR 24802, June 7, 1978) (FRL–886–6).

6. *Environmental Defense Fund* v. *Environmental Protection Agency*. 636 F2d 1267 (D.C. Cir. 1980).

7. EPA. Polychlorinated Biphenyls (PCBs); Use in Electrical Equipment; Advance Notice of Proposed Rulemaking. **Federal Register** (46 FR 16096, March 10, 1981) (FRL–1773–2).

8. EPA. Polychlorinated Biphenyls (PCBs) Manufacturing, Processing, Distribution in Commerce, and Use Prohibitions; Use in Electrical Equipment Final Rule. **Federal Register** (47 FR 37342, August 25, 1982) (FRL–2184–6).

9. EPA. Polychlorinated Biphenyls in Electrical Transformers Final Rule. **Federal Register** (50 FR 29170, July 17, 1985) (FRL–2835–6).

10. EPA. Reclassification of PCB and PCB-Contaminated Electrical Equipment; Final Rule. **Federal Register** (66 FR 17602, April 2, 2001) (FRL–5790–7).

11. Mills III, William James. Thesis for the degree of Doctor of Philosophy in the Graduate College Public Health Sciences of the University of Illinois at Chicago. Polychlorinated Biphenyls, Dioxins and Furans in Ambient Air During the Smithville PCB Incineration Project. 2001.

12. EPA. PCBs: Cancer Dose Response Assessment and Application to Environmental Mixtures (EPA/600/P–96/001F). Available on-line at: *http://cfpub.epa.gov/ncea/CFM/recordisplay.cfm?deid=12486.*

13. EPA. Integrated Risk Information System (IRIS) Polychlorinated Biphenyls (PCBs) (CASRN 1336–36–3). June 1, 1997. Available on–line at: *http://www.epa.gov/NCEA/iris/subst/0294.htm.*

14. ATSDR. Toxicological Profile for Polychlorinated Biphenyls (PCBs). November 2000. Available on–line at: *http://www.atsdr.cdc.gov/toxprofiles/tp17.html.*

15. EPA. Compilation of Total Annual PCB Large Capacitors and Total PCB Trnsformers Disposed in the United States From Annual Reports from Commercial PCB Disposal Companies from 1991–2007.

16. EPA. PCB Transformer Registration Database. January 2008. Available on–line at: *http://www.epa.gov/epawaste/hazard/tsd/pcbs/pubs/data.htm.*

17. EPA. Region 9. Exxon Transformer Case Press Release. Available on–line at: *http://yosemite.epa.gov/opa/admpress.nsf/2dd7f669225439b78525735900400c31/66964079fdc4700e852574ac006f4537.*

18. United States Coast Guard. National Response Center. Available on–line at: *http://www.nrc.uscg.mil/nrclegal.html.*

19. E-mail messages from Nichaulus C. Threatt of the National Response Center to John Smith, dated 8–19–2009 and 9–10–2009.

20. Stockholm Convention on Persistent Organic Pollutants (POPs) Ratification Status. Available on–line at: *http://chm.pops.int/Countries/StatusofRatification/tabid/252/language/en-US/Default.aspx.*

21. The 1998 Aarhus Protocol on Persistent Organic Pollutants (LRTAP POPs). Available on–line at: *http://www.unece.org/env/lrtap/status/98pop_st.htm.*

22. Environment Canada. PCB Regulations *Canada Gazette*. Part II, Vol. 142, No. 19, pp. 2078–2140. September 17, 2008.

23. Bartley, W. Life Cycle Management of Utility Transformer Assets. Hartford Steam Boiler Inspection & Insurance Company. October 10–11, 2002.

24. EPA. Exposure and Human Health Reassessment of 2,3,7,8-Tetrachlorodibenzo-p-Dioxin (TCDD) and Related Compounds National Academy Sciences (NAS) Review Draft. October 2004. Available on-line at: *http://www.epa.gov/ncea/pdfs/dioxin/nas-review.*

25. Great Lakes Binational Toxics Strategy, Stakeholder Forum–1998, Implementing the Binational Toxics

Strategy, Polychlorinated Biphenyls (PCBs) Workshop Great Lakes Monitoring. Available on-line at: *http://www.epa.gov/grtlakes/bnsdocs/pcbsrce/pcbsrce.html*.

26. Panero, M.; Boehme, S.; and Muñoz, G. Pollution Prevention and Management Strategies for Polychlorinated Biphenyls in the New York/New Jersey Harbor. Report from the Harbor Consortium of the New York Academy of Sciences. February 2005.

27. Covaci, A.; Voorspoels, S; Schepens, P.; Jorens, P.; Blust, R.; and Neels, H. The Belgian PCB/dioxin crisis–8 years later: An overview. *Environmental Toxicology and Pharmacology*. Vol. 25, Issue 2. March 2008.

28. van Larebeke, N.; Hens, L.; Schepens, P.; Covaci, A.; Baeyens, J.; Everaert, K.; Bernheim, J.; Vlietinck, R.; and De Poorter, G. The Belgian PCB and Dioxin Incident of January-June 1999: Exposure Data and Potential Impact on Health. *Environmental Health Perspectives*. 109:265–273. 2001.

29. Buzby, J. and Chandran, R. Chapter 8, The Belgian Dioxin Crisis and Its Effects on Agricultural Production and Exports. International Trade and Food Safety/AER–828 Economic Research Service, USDA.

30. Reuters. Used Oil May have Caused Irish Food Crisis: Paper. December 10, 2008.

31. British Broadcasting Corporation (BBC) News. Irish pork contaminations probed. December 8, 2008. Available on-line at: *http://news.bbc.co.uk/go/pr/fr/-/2/hi/uk_news/7770476.stm*.

32. Food Safety Authority of Ireland. Recall Information last reviewed March 9, 2009. Available on-line at: *http://www.fsai.ie/food_businesses/topics_of_interest/recall_of_pork_dec08/recall_information.html*.

33. EPA, OPPT. PCB Spill Cleanup in Standing Rock Sioux Tribe. EPA–745–N–98–001. *OPPT Tribal News*. Vol. 1, Issue 1, pp. 1–2. September 1998.

34. Senator Byron Dorgan text from the *Congressional Record*. pp. S2914–2915. Available on-line at: *http://frwebgate.access.gpo.gov/cgi-bin/getpage.cgi?position=all&page=S2914&dbname=1998_record*.

35. EPA. John H. Smith personal communication with J. Gidner, BIA. September 1999.

36. EPA, Office of Water. Guidance for conducting fish and wildlife consumption surveys. EPA–823–B–98–007. 1998. Available on-line at: *http://www.epa.gov/fishadvisories/files/fishguid.pdf*.

37. EPA. Methodology for Deriving Ambient Water Quality Criteria for the Protection of Human Health. Washington, DC: Office of Water. EPA–822–B–00–004. 2000. Available on-line at: *http://www.epa.gov/waterscience/criteria/humanhealth/method/complete.pdf*.

38. Fitzgerald, E.; Hwang, S.; Gomez, M.; Bush, B.; Yang, B.; and Tarbell, A. Environmental and occupational exposures and serum PCB concentrations and patterns among Mohawk men at Akwesasne. *Journal of Exposure Science and Environmental Epidemiology*. 17:269–278. 2007.

39. Tribal Rights and Fish Consumption Workshop, University of Washington School of Public Health. August 12–13, 2009. Available on-line at: *http://depts.washington.edu/tribalws/index.php?doc=schedule*.

40. Hardy, J. Evaluation of Contaminants in Puget Sound Fish and Resulting Fish Advisory. Washington State Department of Health. November 2, 2009. Available on-line at:*http://www.epa.gov/waterscience/fish/forum/2009/day1d.ppt*.

41. Sandau, C.; Ayotte, P.; Dewailly, E.; Duffe, J.; and Norstrom, R. Analysis of Hydroxylated Metabolites of PCBs (OH-PCBs) and Other Chlorinated Phenolic Compounds in Whole Blood from Canadian Inuit. *Environ Health Perspect*. 108:611–616. July 2000. Available on-line at: [Online 25 May 2000] *http://ehpnet1.niehs.nih.gov/members/2000/108p611-616sandau/108p611.pdf*.

42. USWAG. Promoting the Voluntary Phase-Down of PCB-Containing Equipment. October 2005.

43. EPA. Disposal of Polychlorinated Biphenyls; Import for Disposal; Final Rule. **Federal Register** (61 FR 11096, March 18, 1996) (FRL–5354–8).

44. Helmick, R. W. and Zemanek, J. H. How Entergy Battled Back-to-back Hurricanes. Entergy Corporation, Electric Light and Power. January 2006.

45. EPA. EPA Personnel Deployed to Greensburg, Kansas, for Tornado Response. May 7, 2007. Available on-line at: *http://yosemite.epa.gov/opa/admpress.nsf/8b770facf5edf6f185257359003fb69e/c0b30985df7b3cac852572d5006f3917!OpenDocument&Start=1&Count=5&Expand=1*.

46. ASTM International. D2233–86 (1997). Standard Specification for Chlorinated Aromatic Hydrocarbons (Askarels) for Capacitors (Withdrawn in 2003).

47. EPA. Support Document/Voluntary Environmental Impact Statement and PCB Manufacturing, Processing, Distribution in Commerce, and Use Ban Regulation: Economic Impact Analysis. pp. 32–43. April 1979.

48. EPA. Information on the Natural Gas Pipeline Agreement with Texas Eastern. pp. 33. 1981.

49. EPA. PCBs in Caulk in Older Buildings. Available on-line at: *http://www.epa.gov/pcbsincaulk*.

XVI. Statutory and Executive Order Reviews

Under Executive Order 12866, entitled ''Regulatory Planning and Review'' (58 FR 51735, October 4, 1993), this action was submitted to the Office of Management and Budget (OMB) for review. Any changes to the document that were made in response to OMB comments received by EPA during that review have been documented in the docket as required by the Executive Order.

Since this document does not impose or propose any requirements, and instead seeks comments and suggestions for the Agency to consider in possibly developing a subsequent proposed rule, the various other review requirements that apply when an agency imposes requirements do not apply to this action. Nevertheless, as part of your comments on this document, you may include any comments or information that you have regarding the various other review requirements.

In particular, EPA is interested in any information that would help the Agency to assess the potential impact of a rule on small entities pursuant to the Regulatory Flexibility Act (RFA) (5 U.S.C. 601 *et seq.*); to consider voluntary consensus standards pursuant to section 12(d) of the National Technology Transfer and Advancement Act of 1995 (NTTAA), Public Law 104–113, section 12(d) (15 U.S.C. 272 note); to consider environmental health or safety effects on children pursuant to Executive Order 13045, entitled ''Protection of Children from Environmental Health Risks and Safety Risks'' (62 FR 19885, April 23, 1997); or to consider human health or environmental effects on minority or low-income populations pursuant to Executive Order 12898, entitled ''Federal Actions to Address Environmental Justice in Minority Populations and Low-Income Populations'' (59 FR 7629, February 16, 1994).

The Agency will consider such comments during the development of any subsequent proposed rule as it takes appropriate steps to address any applicable requirements.

List of Subjects in 40 CFR Part 761

Environmental protection, Hazardous substances, Labeling, Polychlorinated

biphenyls (PCBs), Reporting and recordkeeping requirements.

Dated: March 31, 2010.

Lisa P. Jackson,

Administrator.

[FR Doc. 2010–7751 Filed 4–6–10; 8:45 am]

BILLING CODE 6560–50–S

DEPARTMENT OF THE INTERIOR

Fish and Wildlife Service

50 CFR Part 17

[Docket No. FWS-R8-ES-2008-0067]
[MO 92210-0-0008-B2]

Endangered and Threatened Wildlife and Plants; 12-Month Finding on a Petition to Reclassify the Delta Smelt From Threatened to Endangered Throughout Its Range

AGENCY: Fish and Wildlife Service, Interior.

ACTION: Notice of 12–month petition finding.

SUMMARY: We, the U.S. Fish and Wildlife Service (Service), announce a 12–month finding on a petition to reclassify the delta smelt (*Hypomesus transpacificus*) under the Endangered Species Act of 1973, as amended. After review of all available scientific and commercial information, we find that reclassifying the delta smelt from a threatened to an endangered species is warranted, but precluded by other higher priority listing actions. We will develop a proposed rule to reclassify this species as our priorities allow.

DATES: The finding announced in this document was made on April 7, 2010.

ADDRESSES: This finding is available on the Internet at *http://www.regulations.gov* at Docket Number FWS–R8–ES–2008–0067. Supporting documentation we used in preparing this finding is available for public inspection, by appointment, during normal business hours at the U.S. Fish and Wildlife Service, Sacramento Fish and Wildlife Office, 2800 Cottage Way, W-2605, Sacramento, CA 95825. Please submit any new information, materials, comments, or questions concerning this finding to the above address.

FOR FURTHER INFORMATION CONTACT: Mary Grim, San Francisco Bay-Delta Fish and Wildlife Office, 650 Capitol Mall, 5th Floor, Sacramento, CA 95814; by telephone at 916-930-5634; or by facsimile at 916-414-6462. If you use a telecommunications device for the deaf (TDD), call the Federal Information Relay Service (FIRS) at 800-877-8339.

SUPPLEMENTARY INFORMATION:

Background

Section 4(b)(3)(A) of the Endangered Species Act of 1973, as amended (Act) (16 U.S.C. 1531 *et seq.*) requires that, for any petition to add a species to, remove a species from, or reclassify a species on one of the Lists of Endangered and Threatened Wildlife and Plants, we first make a determination whether the petition presents substantial scientific or commercial information indicating that the petitioned action may be warranted. To the maximum extent practicable, we make this determination within 90 days of receipt of the petition, and publish the finding promptly in the **Federal Register**.

If we find the petition presents substantial information, section 4(b)(3)(A) of the Act requires us to commence a status review of the species, and section 4(b)(3)(B) of the Act requires us to make a second finding, this one within 12 months of the date of receipt of the petition, on whether the petitioned action is: (a) Not warranted, (b) warranted, or (c) warranted, but the immediate proposal of a regulation implementing the petitioned action is precluded by other pending proposals to determine whether any species is threatened or endangered, and expeditious progress is being made to add or remove qualified species from the Lists of Endangered and Threatened Wildlife and Plants. We must publish these 12–month findings in the **Federal Register**.

Species for which listing is warranted but precluded are considered to be "candidates" for listing. Section 4(b)(3)(C) of the Act requires that a petition for which the requested action is found to be warranted but precluded be treated as though resubmitted on the date of such finding, i.e., requiring a subsequent finding to be made within 12 months. Each subsequent 12–month finding is also to be published in the **Federal Register**. We typically publish these findings in our Candidate Notice of Review (CNOR). Our most recent CNOR was published on November 9, 2009 (74 FR 57804).

Previous Federal Action

We were originally petitioned to list the delta smelt as endangered on June 26, 1990. We proposed the species as threatened and proposed the designation of critical habitat on October 3, 1991 (56 FR 50075). We listed the species as threatened on March 5, 1993 (58 FR 12854), and we designated critical habitat on December 19, 1994 (59 FR 65256). The delta smelt was one of eight fish species addressed in the November 26, 1996, *Recovery Plan for the Sacramento–San Joaquin Delta Native Fishes* (Service 1996, pp. 1-195). We completed a 5–year status review of the delta smelt on March 31, 2004 (Service 2004, pp. 1-50).

On March 9, 2006, we received a petition to reclassify the listing status of the delta smelt, a threatened species, to endangered on an emergency basis. We sent a letter to the petitioners dated June 20, 2006, stating that we would not be able to address their petition at that time because further action on the petition was precluded by court orders and settlement agreements for other listing actions that required us to use nearly all of our listing funds for fiscal year 2006. We also stated in our June 20, 2006, letter that we had evaluated the immediacy of possible threats to the delta smelt, and had determined that an emergency reclassification was not warranted at that time.

On July 10, 2008, we published a 90–day finding that the petition presented substantial scientific information to indicate that reclassifying the delta smelt may be warranted (73 FR 39639). We announced the initiation of a status review at that time, and requested comments and information from the public on or before September 8, 2008. We reopened the comment period on December 9, 2008, and that comment period closed February 9, 2009 (73 FR 74674).

Species Information

Description and Taxonomy

Delta smelt are slender-bodied fish, generally about 60 to 70 millimeters (mm) (2 to 3 inches (in)) long, although they may reach lengths of up to 120 mm (4.7 in) (Moyle 2002, p. 227). Delta smelt are in the Osmeridae family (smelts) (Stanley *et al.* 1995, p. 390). Live fish are nearly translucent and have a steely blue sheen to their sides (Moyle 2002, p. 227). Delta smelt feed primarily on small planktonic (free-floating) crustaceans, and occasionally on insect larvae (Moyle 2002, p. 228). Delta smelt usually aggregate into loose schools, but their discontinuous stroke-and-glide swimming behavior likely makes schooling difficult (Moyle 2002, p. 228).

The delta smelt is one of six species currently recognized in the *Hypomesus* genus (Bennett 2005, p. 8). Within the genus, delta smelt is most closely related to surf smelt (*H. pretiosis*), a species common along the western coast of North America. In contrast, delta smelt is a comparatively distant relation to the wakasagi (*H. nipponensis*), which was introduced into Central Valley

reservoirs in 1959, and may be seasonally sympatric with delta smelt in the estuary (Trenham *et al.* 1998, p. 417). Allozyme studies have demonstrated that wakasagi and delta smelt are genetically distinct and presumably derived from different marine ancestors (Stanley *et al.* 1995). Genetic characterization of delta smelt, longfin smelt, and wakasagi is presently under investigation, using contemporary methodologies.

Distribution and Abundance

Delta smelt are endemic to (native and restricted to) the San Francisco Bay and Sacramento–San Joaquin Delta Estuary (Delta) in California, found only from the San Pablo Bay upstream through the Delta in Contra Costa, Sacramento, San Joaquin, Solano, and Yolo Counties (Moyle 2002, p. 227). Their historical range is thought to have extended from San Pablo Bay upstream to at least the city of Sacramento on the Sacramento River and the city of Mossdale on the San Joaquin River. They were once one of the most common pelagic (living in open water away from the bottom) fish in the upper Sacramento–San Joaquin Estuary (Moyle 2002, p. 230).

Population estimates are not possible to obtain for this species (Herbold 1996, p. 1). A relative abundance index has been developed using various net surveys as well as counts of individuals entrained by (drawn into) Federal and State water export facilities (Bennett 2005, p. 5), and population assessments have been based on abundance index trends. Based on those indices, significant changes in delta smelt abundance occurred in 1975-76, 1980-81, and 1998-99 (Manly and Chotkowski 2006, p. 602). The 1980-1981 abundance index decline was one of the factors that resulted in listing delta smelt as a threatened species in 1993 (58 FR 12854; Moyle 2002, p. 230; CDFG 2008, p. 1). From 1991 to 2001, abundance index trends fluctuated wildly. In 2002, delta smelt and three other pelagic Delta fishes seemed to decline significantly, with delta smelt abundance indices trending to record lows from 2002 through 2008 (Armor *et al.* 2005, p. 3; CDFG 2008, p. 2). In March of 2004, we completed a 5 year review of the species that recommended against changing the listing status of the delta smelt. At that time there was no indication that the decreasing trend of 2002 was outside of the range of expected variability, similar to those in 1992, 1994, and 1996 (Service 2004, unpaginated App. B Midwater Trawl Abundance Index table). However, the delta smelt index continues a decreasing trend and is now estimated at the lowest level ever measured-roughly one and a half percent of the 1980 index level (CDFG 2008, p. 2).

Habitat and Life History

Studies indicate that delta smelt require specific environmental conditions (freshwater flow, water quality) and habitat types (shallow open waters) within the estuary for migration, spawning, egg incubation, rearing, and larval and juvenile transport from spawning to rearing habitats (Moyle 2002, pp. 228-229). Delta smelt are a euryhaline (tolerate a wide range of salinities) species; however, they rarely occur in water with more than 10-12 parts per thousand salinity (about one-third seawater). Delta smelt tolerate temperatures ranging from 7.5 ^{0}C to 25.4 ^{0}C (45 to 78 ^{0}F) in the laboratory (Swanson *et al.* 2000, p. 386, Table 1), but may be found in warmer waters in the Delta. Feyrer at al. (2007, p. 728) found that relative abundance of delta smelt was related to fall salinity and turbidity (water clarity). Delta smelt probably evolved within the naturally turbid (silt and particulate-laden) environment of the Delta and likely rely on certain levels of background turbidity at different life stages and for certain behaviors. Laboratory studies found that delta smelt larval feeding increased with increased turbidity (Baskerville-Bridges *et al.* 2004, p. 222).

Although spawning has not been observed in the wild, spawning location and timing has been inferred from the collection of larvae in sloughs and shallow edge-waters of channels in the upper Delta and in Montezuma Slough near Suisin Bay (Wang 1991, pp. 11-12). Spawning is believed to occur from late January through late June or early July at water temperatures ranging from 7 to 15 ^{0}C (45 to 59 ^{0}F) (Moyle 2002, p. 229). In the laboratory, spawning has been observed to occur between 12 and 22 ^{0}C (54 and 72 ^{0}F) (Bennett 2005, p. 13). In laboratory conditions, eggs typically hatch after 9 to 14 days and larvae begin feeding 5 to 6 days later (Mager *et al.* 2004, p. 172, Table 1). Larvae are generally most abundant in the Delta from mid-April through May (Bennett 2005, p. 13). After several weeks of development, larval surveys indicate that larvae move downstream until they reach nursery habitat in the "low salinity zone" (LSZ) where the salinity ranges from approximately 2 to 7 parts per thousand (ppt) (Moyle 2002, p. 228). Juvenile smelt rear and grow in the LSZ for several months, preferring relatively shallow open water (Dege and Brown 2004, pp. 56-58). In September or October, delta smelt reach adulthood and begin a gradual migration back into freshwater areas where spawning is thought to occur. Most delta smelt die after spawning, but a small contingent of adults survives and can spawn in their second year (Moyle 2002, p. 228).

Foraging Ecology

Delta smelt feed primarily on small planktonic (free-floating) crustaceans, and occasionally on insect larvae (Moyle 2002, p. 228). Historically, the main prey of delta smelt was the copepod *Eurytemora affinis* and the mysid shrimp *Neomysis mercedis*. The slightly larger copepod *Pseudodiaptomus forbesi* has replaced *E. affinis* as a major prey source of delta smelt since its introduction into the San Francisco Bay–Delta. Two other copepod species, *Limnoithona tetraspina* and *Acartiella sinenisi*, have become abundant since their introduction to the San Francisco Bay–Delta in the mid 1990s. Delta smelt eat these introduced copepods, but *P. forbesi* remains a dominant prey item (Baxter *et al.* 2008, p. 22). The diets of larval delta smelt are limited to larval copepods (Nobriga 2002, p. 156). As mentioned previously, delta smelt are thought to require a turbid environment for efficient, successful foraging.

Summary of Factors Affecting the Species

Section 4 of the Act (16 U.S.C. 1533), and implementing regulations (50 CFR part 424), set forth the procedures for adding species to the Federal Lists of Endangered and Threatened Wildlife and Plants. Under section 4(a)(1) of the Act , a species may be determined to be endangered or threatened based on any of the following five factors: (1) The present or threatened destruction, modification, or curtailment of its habitat or range; (2) overutilization for commercial, recreational, scientific, or educational purposes; (3) disease or predation; (4) the inadequacy of existing regulatory mechanisms; or (5) other natural or manmade factors affecting its continued existence. In making this finding, information pertaining to the delta smelt, in relation to the five factors provided in section 4(a)(1) of the Act, is discussed below.

Numerous threats to delta smelt could be addressed either as habitat modifications or as falling under another of the five listing factors. We will consider habitat modifications (Factor A) to include alterations of salinity and turbidity (water clarity). We address issues of direct entrainment, contaminants, invasive species, and effects of small populations under Factor E, Other Natural or Manmade Factors.

A. The Present or Threatened Destruction, Modification, or Curtailment of Its Habitat or Range

From late spring through fall and early winter, delta smelt are located at the LSZ, which moves depending upon San Francisco Bay–Delta water outflow (Dege and Brown 2004, pp. 56-58; Service 2008, pp. 147, 150). Reduced Delta water outflow causes the LSZ to move upstream, which seems to concentrate delta smelt in a smaller area along with other competing planktivorous fishes (Bennett 2005, pp. 11, 20). Causes of such reduced outflows include smaller upstream releases from dams, increased water exports from the State and Federal facilities, and upstream water diversions for flooding rice fields (Feyrer 2007, p. 731; Service 2008, p. 153). Low freshwater outflows in the fall have been correlated with a reduced abundance index for young delta smelt the following summer (Feyrer *et al.* 2007, pp. 727, 728).

Delta smelt are also believed to require relatively turbid (not clear) waters to capture prey and avoid predators (Feyrer 2007, p. 731). Increased water clarity during the summer and fall has been shown to be negatively correlated with subsequent summer delta smelt abundance indices (Feyrer 2007, p. 728; Nobriga *et al.* 2008, p. 8). Since 1978, delta smelt have become increasingly rare in summer and fall surveys of the San Joaquin region of the San Francisco Bay–Delta (Nobriga *et al.* 2008, p. 9). The primary reason appears to be the comparatively high water clarity in the region, although high water temperatures are also likely a contributing factor (Nobriga *et al.* 2008, pp. 8, 9). The increased water clarity in delta smelt rearing habitat is attributed to the interruption of sediment transport by upstream dams (Arthur and Ball 1979, p. 157; Wright and Schoellhamer 2004, pp. 7, 10) and the spread of the exotic invasive water plant *Egeria densa* (Brazilian waterweed), which traps suspended sediments (Feyrer *et al.* 2007, p. 731).

Summary for Factor A

Based on a review of the best scientific and commercial information available, we find that destruction, modification, or curtailment of habitat poses a current and future threat to delta smelt. Operation of upstream reservoirs, increased water exports, and upstream water diversions have altered the location and extent of the low salinity zone, concentrating smelt in an area with competing fish species. Upstream reservoirs and the increased presence of *Egeria densa* have also reduced turbidity levels in rearing habitat, which may reduce foraging efficiency.

B. Overutilization for Commercial, Recreational, Scientific, or Educational Purposes

Delta smelt monitoring surveys are conducted throughout the year, including the Fall Mid-Winter Trawl (FMWT), Summer Townet Survey (TNS), 20-mm Survey, and Spring Kodiak Trawl Survey (SKT). Overall take by survey collection is believed to be low compared to estimated relative abundances (Bennett 2005, p. 7); however, considering the concern for reduced abundance based on trend assessment, questions arise as to whether these and other surveys pose a concern to the delta smelt. Because of low abundance and a high level of sampling mortality, survey methods have been modified to minimize potential impacts to delta smelt (K. Souza 2009, pers. comm.). Based on the low number of delta smelt collected in sampling surveys and the modified methods employed to further reduce these collections, we find that the amount of take expected to occur from sampling surveys does not reach a level substantial enough to be considered a threat. There is no evidence of use of the species for other commercial, recreational, scientific, or educational purposes.

Based on a review of the best scientific information available, we find that overutilization for commercial, recreational, or educational purposes is not likely to be a significant threat to the delta smelt in any portion of its range. Overutilization for scientific purposes may pose an increased concern to delta smelt, but survey protocols have been modified to minimize that concern.

C. Disease or Predation

Disease

Studies have not found evidence of significant disease infestations in wild delta smelt (Teh 2007, p. 8; Baxter *et al.* 2008, p. 14). Based on the best scientific and commercial information available, we conclude that disease does not threaten the delta smelt in any portion of its range.

Predation

At least three species of nonnative fish with the potential to prey on delta smelt occur within the Delta: striped bass (*Morone saxatilis*), largemouth bass (*Micropterus salmoides*), and inland silversides (*Menidia beryllina*) (Bennett 2005, p. 49; Baxter *et al.* 2008, p. 17). Striped bass are widely distributed in pelagic areas of the San Francisco Bay–Delta, and thus have wide areas of overlap with delta smelt juveniles and adults. They also tend to aggregate in the vicinity of water diversion structures, where delta smelt are frequently entrained (Nobriga and Feyrer 2007, p. 9). Thus, striped bass are likely to be the most significant predator of delta smelt (Nobriga and Feyrer 2007, p. 9), although the rarity of delta smelt would presumably make them a relatively unusual prey item. Delta smelt are not commonly found as prey for striped bass (Bennett 2005, p. 49; Nobriga and Feyrer 2007, p. 9); however, smelt may be taken opportunistically since both striped and largemouth bass have highly diverse diets (Nobriga and Feyrer 2007, p. 6).

Largemouth bass are freshwater fish that prefer shoreline (littoral) habitat with relatively dense water plants (Nobriga and Feyrer 2007, pp. 4, 8; Baxter *et al.* 2008, p. 17). Increases in the Delta's largemouth bass population since the early 1990s is believed to have been facilitated by the spread of the invasive plant *Egeria densa*, which provides bass habitat (Baxter 2008, p. 17). Despite increases in largemouth bass populations and habitat, Nobriga and Feyrer (2007, p 6) did not find delta smelt as largemouth bass prey.

Inland silversides may be predators and competitors with delta smelt (Bennett 2005, pp. 49, 50). Inland silversides were first introduced to the San Francisco Bay–Delta in the mid 1970s, and have increased dramatically in numbers since the mid-1980s. They forage in schools around the shoreline habitats of the San Francisco Bay–Delta, where delta smelt larvae and eggs occur. They readily consume delta smelt larvae in aquarium tests. Bennett (2005, p. 50) concluded that "delta smelt are at high risk if eggs or larvae co-occur with schools of foraging silversides." We have no information regarding the extent to which this is likely to occur in the wild.

Based on a review of the best available scientific and commercial information, we find that predation likely constitutes a low-to-moderate threat. Although we have no empirical evidence to indicate predation has significantly increased since the time of listing, other factors, such increasing water clarity, could increase the risk of predation.

Summary for Factor C

Based on a review of the best available scientific and commercial information available, we conclude that disease is not likely to be a significant threat, and that predation is likely a

low-to-moderate threat, to the species at this time.

D. The Inadequacy of Existing Regulatory Mechanisms

State Laws

California Endangered Species Act: The delta smelt was listed as threatened under the California Endangered Species Act (CESA) in 1993 (CDFG 2008, p. 5), and was reclassified as endangered under the CESA in 2010 (14 CCR 670.5). The CESA prohibits unpermitted possession, purchase, sale, or take of listed species. However, the CESA definition of take does not include harm, which under the Act can include destruction of habitat that actually kills or injures wildlife by significantly impairing essential behavioral patterns (50 CFR 17.3). The CESA does require consultation between the California Department of Fish and Game (CDFG) and other State agencies to ensure that activities of State agencies will not jeopardize the continued existence of State-listed species (CERES 2009, p. 1).

Porter Cologne Water Quality Control Act: The Porter Cologne Water Quality Control Act establishes the State Water Resources Control Board (SWRCB) and nine Regional Water Quality Control Boards that are responsible for the regulation of activities and factors that could degrade California water quality and for the allocation of surface water rights (California Water Code Division 7). In 1995, the SWRCB developed the Bay-Delta Water Quality Control Plan to establish water quality objectives for the Delta. This plan is implemented by Water Rights Decision 1641, which imposes flow and water quality standards on State and Federal water export facilities to assure protection of beneficial uses in the Delta (Service 2008, pp. 21-27). The various flow objectives and export restraints are designed, in part, to protect fisheries. These objectives include specific outflow requirements throughout the year, specific water export restraints in the spring, and water export limits based on a percentage of estuary inflow throughout the year. The water quality objectives are designed to protect agricultural, municipal, industrial, and fishery uses; they vary throughout the year and by the wetness of the year.

Federal Laws

National Environmental Policy Act: The National Environmental Policy Act (NEPA) (42 U.S.C. 4321 *et seq.*) requires all Federal agencies to formally document, consider, and publicly disclose the environmental impacts of major Federal actions and management decisions significantly affecting the human environment. NEPA documentation is provided in an environmental impact statement, an environmental assessment, or a categorical exclusion, and may be subject to administrative or judicial appeal. However, the Federal agency is not required to select an alternative having the least significant environmental impacts, and may select an action that will adversely affect sensitive species provided that these effects are known and identified in a NEPA document. Therefore, we do not consider the NEPA process in itself is to be a regulatory mechanism that is certain to provide significant protection for the delta smelt.

Endangered Species Act: The delta smelt is currently listed as a threatened species under the Endangered Species Act of 1973, as amended (Act). By general regulation under sections 4(d) and 7(a) of the Act, threatened fish or wildlife species are afforded all the regulatory protections that endangered fish or wildlife species have. However, in order to provide those measures necessary and advisable for the conservation of a species listed as threatened, we can issue a special rule under section 4(d) of the Act to allow different restrictions on "take" as defined in section 3(19) of the Act and regulated under section 9 of the Act. No special rules for delta smelt currently exist. The Act defines a "threatened species" as "any species which is likely to become an endangered species within the foreseeable future throughout all or a significant portion of its range" (section 3(20) of the Act). An "endangered species" is "any species which is in danger of extinction throughout all or a significant portion of its range" (section 3(6) of the Act). Section 6 of the Act authorizes us to enter into conservation agreements with States, and to allocate funds for conservation programs to benefit threatened or endangered species. Neither section 6 of the Act nor Service policy gives higher priority to endangered vs. threatened species for conservation funding.

The Central Valley Project (CVP), operated by the Bureau of Reclamation (Reclamation), and State Water Project (SWP), operated by the California Resources Agency Department of Water Resources (DWR), are currently operating under a Biological Opinion (BO) issued December 15, 2008, under section 7 of the Act (Service 2008, pp. 1-396). The BO includes a reasonable and prudent alternative (RPA), according to which water export facility operations could proceed without jeopardizing the continued existence of the species or destroying or adversely modifying its designated critical habitat. It also includes an incidental take statement (ITS) specifying reasonable and prudent measures necessary to minimize the incidental take of the species resulting from CVP and SWP operations. Reclamation has accepted the RPA provisionally, but may decide to reinitiate consultation (Reclamation 2008, p. 1). The ITS and BO replace a previous ITS and BO issued in 2005 (Service 2005, p. 1), and also replace flow restrictions instituted by the District Court in the case of *NRDC* v. *Kempthorne* (Wanger 2007, pp. 1-11), which found the 2005 BO inadequate to conserve the species.

Central Valley Project Improvement Act: The Central Valley Project Improvement Act (Pub. L. 102-575)(CVPIA) amends the previous Central Valley Project (CVP) authorizations to include fish and wildlife protection, restoration, and mitigation as project purposes having equal priority with irrigation and domestic uses, and fish and wildlife enhancement as having an equal priority with power generation (Public Law 102-575, October 30, 1992; Reclamation 2009). Included in CVPIA was a provision to dedicate 800,000 acre-feet of CVP yield annually for fish, wildlife, and habitat restoration, referred to as (b)(2) water. Since 1993, (b)(2) water has been used, supplemented with acquired environmental water (Environmental Water Account and CVPIA (b)(3) water), to protect delta smelt and their habitat by increasing stream flows and reducing CVP export pumping in the Delta (Guinee 2009, pers. comm.).

Summary for Factor D

In summary, although regulatory mechanisms are in place to address direct and indirect adverse effects to delta smelt and conserve smelt habitat, not all activities impacting delta smelt are subject to regulatory review and comment. The continued decline in delta smelt trend indicators suggest that existing regulatory mechanisms, as currently implemented, are not adequate to reduce threats to the species. Therefore, based on a review of the best scientific information available, we find existing regulatory mechanisms are either not sufficient or may not be addressing the most significant threat to the species.

E. Other Natural or Manmade Factors Affecting the Species' Continued Existence

Other factors affecting the continued existence of the species include direct entrainment into water diversions, introduced species, contaminants, and increased vulnerabilities of small populations.

Direct Entrainment

Agricultural Diversions for Irrigation: There are 2,209 known agricultural diversions in the San Francisco Bay–Delta and an additional 366 diversions in Suisun Marsh used to enhance waterfowl habitat (Service 2008, p. 172). Most of these diversions do not have fish screens to protect fish from entrainment (trapping). The amount of entrainment that may occur at these diversions is not well-known, and efforts to determine the effect of this entrainment have been limited because previous studies either (1) did not quantify the volumes of water diverted, or (2) did not sample at times when, or locations where, delta smelt were abundant. Delta smelt may not be vulnerable to agricultural diversions for several reasons. First, adult delta smelt move into the Delta to spawn during winter to early spring when agricultural diversion operations are at a minimum. Second, larval delta smelt avoid the South Delta during summer when diversion demand peaks. Third, delta smelt are often distributed offshore, away from agricultural diversions (Nobriga *et al*. 2004, p. 293). Therefore, we do not consider entrainment by agricultural or waterfowl habitat diversions to be a significant threat to delta smelt.

Power Plant Diversions: Two power plants located near the confluence of the Sacramento and San Joaquin Rivers pose an entrainment risk to delta smelt: the Contra Costa Power Plant and the Pittsburg Power Plant (Service 2008, pp. 173-174). The maximum combined non-consumptive intake of cooling water for the two facilities is 3,240 cubic feet per second (cfs), which can exceed 10 percent of the total net outflow of the Sacramento and San Joaquin rivers. In 1979, average annual entrainment at the two power plants was estimated to be 86 million smelt (delta and longfin smelt combined). Power plant operations have been substantially reduced since that time, and are now either kept offline, or operating at very low levels, except as necessary to meet peak power needs. The owner of the power plants, Mirant, is monitoring entrainment at the two power plants to determine how many delta smelt may be affected by operation of the two plants. Entrainment of delta smelt by these two major power plants has been a significant threat in the past and could impact delta smelt in the future. These plants are of particular concern because they are located near, and draw cooling water from, an area where sensitive fish species are known to occur. Additional study is needed to determine the overall environmental impact of these power plants.

Water Export Facilities: Four major water diversion facilities exported between 4.85 and 8.7 km^3 (3.93 and 7.05 million acre-feet) per year from the Delta during the years 1995 through 2005 (Kimmerer and Nobriga 2008, p 2). Of these, the State and Federal facilities exported between 4.7 and 8.4 km^3 (3.81 and 6.81 million acre-feet) per year. Operation of water export facilities directly affects fish by entrainment into the diversion facility. The risk of entrainment varies with the environmental and manmade effects on Delta hydrology and the location of delta smelt in the Delta (Culberson *et al*. 2004, pp. 260-262; Kimmerer and Nobriga 2008, pp. 19-20).

Entrainment of delta smelt varies among seasons and among years. Most adults are entrained from late December through March, while most larvae and juveniles are entrained from April through the end of June to early July. Studies of entrainment at the State and Federal export facilities found that entrainment rates increased with reverse flows in the Delta, which are related to export rates (Kimmer 2008, p. 20-22). Kimmerer (2008, p. 20, 22) estimated that from 0 to 62 percent of the larval population and 3 to 50 percent of the adult population is entrained annually by the State and Federal export facilities. Although an effort is made to salvage fish entrained by the pumping facilities, delta smelt are too fragile to do so effectively, and essentially all delta smelt entrained by the pumping facilities, including all delta smelt that enter the SWP's Clifton Court Forebay, do not survive (Bennett 2005, p. 37).

Entrainment may also affect the distribution of the successfully spawned population. Export of water by the CVP and SWP likely limits the reproductive success of delta smelt in the San Joaquin River by entraining most larvae during downstream transport from spawning sites to rearing areas (Kimmerer and Nobriga *et al*. 2008, p. 11). Winter entrainment of delta smelt represents a loss of pre-spawning adults and their reproductive potential (Sommer *et al*. 2007).

The population-level effects of such losses are unknown. However, increases in winter salvage of adults at the State and Federal export facilities during the early 2000s coincide with declines in delta smelt abundance estimates during the same time period (Baxter 2008, p.18). The total annual pumping from the State and Federal export facilities increased significantly in 2000, and has remained above 1990's levels through 2007 (Service 2008, p. 125). The delta smelt Fall Midwater Trawl (FMWT) abundance index decreased in the year 2000, and experienced severe declines 2 years later (CDFG 2008, p. 2). While there are many factors contributing to the declining trend in delta smelt abundance estimates, we consider entrainment by State and Federal water export facilities to be a significant and ongoing threat to the delta smelt.

In summary, we do not consider entrainment by agricultural diversions to be a significant threat due to their nearshore location. Entrainment into power plants at Pittsburgh and Contra Costa has had a significant impact on delta smelt in the past; however, their operations have been modified, and further study is needed to determine the present level of threat to delta smelt. The operation of State and Federal export facilities constitute a significant and ongoing threat to delta smelt through direct mortality by entrainment.

Introduced Species

Introduced species have altered the Delta food web and may have played a role in the decline of delta smelt (Nobriga 1998, p. 20). The overbite clam (*Corbula amurensis*) is a nonnative species that became abundant in the Delta in the late 1980s. Starting in about 1987 to 1988, declines were observed in the abundance of phytoplankton (Alpine and Cloern 1992, p. 951) and the copepod *Eurytemora affinis.* These declines have been attributed to grazing by the overbite clam (Kimmerer *et al*. 1994, p. 86). Because the overbite clam also consumes copepod larvae as it feeds (Kimmerer *et al*. 1994, p. 87), it not only reduces phytoplankton biomass but also competes directly with delta smelt for food. It is believed that these changes in the estuarine food web negatively influence pelagic fish abundance, including delta smelt abundance.

Copepods (*E. affinis, Psuedodiaptomus forbesi*), a major prey item for delta smelt, have declined in abundance in the Delta since the 1970s (Kimmerer and Orsi 1996, p. 409). *Limnoithona tetraspina* (no common name) is a nonnative copepod that began increasing in numbers in the delta in the mid 1990s – about the same time that the delta smelt's preferred prey copepod, *P. forbesi*, began declining

(Bennett 2005, p. 18). *L. tetraspina* is now the most abundant copepod species in the low salinity zone (Bouley and Kimmerer 2006, p. 219), and is likely an inferior prey species for delta smelt because of its smaller size and superior predator avoidance abilities when compared to *P. forbesi* (Bennett 2005, p. 18; Baxter *et al.* 2008, p. 22).

Delta smelt may also be adversely affected by competition from introduced fish species that use overlapping habitats, such as inland silversides (Bennett 2005, pp. 49, 50). Laboratory studies show that delta smelt growth is inhibited when reared with inland silversides (Bennett 2005, p. 50). Delta smelt and inland silversides have similar morphology, diet, and lifespan, but silversides have a broader diet, and a generally wider ecological niche, a pattern that could give it a competitive advantage over delta smelt (Bennett 2005, p. 50).

In summary, we find that introduced species have altered the Delta food web and constitute a significant threat to delta smelt. It is likely that this threat will increase in the future with the ongoing risk of new species being introduced to the Delta.

Contaminants

There is a potential for exposure of Delta organisms to various contaminants. Toxicity to invertebrates has been noted in water and sediments from the Delta and associated watersheds (e.g., Werner *et al.* 2000, pp. 218, 223). Fish exposed to water from agricultural drains in the San Joaquin River watershed can exhibit body burdens of selenium exceeding the level at which reproductive failure and increased juvenile mortality occur (Saiki *et al.* 2001, p. 629). Kuivila and Moon (2004, p. 239) found that peak densities of larval and juvenile delta smelt sometimes coincided in time and space with elevated concentrations of dissolved pesticides in the spring. These periods of co-occurrence lasted for up to 2 to 3 weeks. Concentrations of individual pesticides were low and much less than would be expected to cause acute mortality; however, the effects of exposure to the complex mixtures of pesticides are unknown.

Several studies were initiated in 2005 to address the possible role of contaminants and disease in the declines of San Francisco Bay–Delta fish and other aquatic species. The primary study consists of twice-monthly monitoring of ambient water toxicity at 15 sites in the San Francisco Bay–Delta and Suisun Bay (Baxter *et al.* 2008, pp. 13, 14). In 2005 and 2006, standard bioassays using the amphipod *Hyalella azteca* had low (less than 5 percent) frequency of occurrence of toxicity. However, preliminary results from 2007, a dry year, suggest the incidence of toxic events was higher than in the previous (wetter) years. Testing indicated that both organophosphate and pyrethroid pesticides may have contributed to the pulses of toxicity. Pyrethroids are of particular interest because use of these insecticides has increased within the San Francisco Bay–Delta watershed, as use of some organophosphate insecticides has declined.

In conjunction with the above investigation, larval delta smelt bioassays were conducted simultaneously with a subset of the invertebrate bioassays (Service 2008, pp. 187-188). The water samples for these tests were collected from six sites within the San Francisco Bay–Delta during May-August of 2006 and 2007. Results from 2006 indicate that delta smelt are highly sensitive to high levels of ammonia, low turbidity, and low salinity. No significant mortality of larval delta smelt was found in the 2006 bioassays, but there were two instances of significant mortality in June and July of 2007. In both cases, the water samples were collected from sites along the Sacramento River, where delta smelt larvae and juveniles are frequently collected in routine survey sampling. Both sets of water samples had relatively low turbidity and salinity levels and moderate levels of ammonia. It is also important to note that no significant *Hyalella azteca* mortality was detected in these water samples. While the *H. azteca* tests are useful for detecting biologically relevant levels of water column toxicity for zooplankton, interpretation of the *H. azteca* test results may not be applicable to fish, and delta smelt in particular.

A histopathological examination of adult delta smelt collected during the winter of 2005 found comparatively high levels of liver lesions in delta smelt taken from Suisun Bay, Suisun Marsh, and the South Delta, indicating that delta smelt in those areas had been subjected to higher levels of stress from contaminants than delta smelt in other areas (Teh 2007, pp. 12, 13). Although the study did not suggest such lesions would prevent survival or reproduction directly, it did note that such stress can leave afflicted individuals more susceptible to mortality from other causes, such as predation and disease. The study concluded that contaminants are unlikely to directly affect the survival of delta smelt in the Central Delta (Teh 2007, p. 2). The study also found a small number of intersex (having characteristics of both male and female sexes) delta smelt, with immature oocytes in their testes (Teh 2007, p. 14). This can result from exposure to endocrine-disrupting chemicals, but it can also occur spontaneously. Teh (2007) concluded that additional laboratory evaluation was necessary to identify the cause.

Large blooms of toxic blue-green algae, *Microcystis aeruginosa*, were first detected in the San Francisco Bay–Delta during the summer of 1999 (Lehman *et al.* 2005, p. 87). Since then, *M. aeruginosa* has bloomed each year, forming large colonies throughout most of the Delta and increasingly down into eastern Suisun Bay (Lehman *et al.* 2005, p. 92). Blooms typically occur between late spring and early fall and peak in the summer when temperatures are above 20 ^{0}C (68 ^{0}F). *Microcystis aeruginosa* can produce natural toxins that pose animal and human health risks if contacted or ingested directly. Preliminary evidence indicates that the toxins produced by local blooms are not toxic to fishes at current concentrations (Baxter *et al.* 2008, p. 14). However, the copepods that delta smelt eat are particularly susceptible to those toxins (Ger 2008, pp. 12, 13). Studies are underway to determine if zooplankton production is compromised during *M. aerguinosa* blooms to an extent that is likely to adversely affect delta smelt (Service 2008, p. 186). Microcystis blooms may also decrease dissolved oxygen to lethal levels for fish; however, the distribution of delta smelt generally does not significantly overlap the densest *M. aeruginosa* concentrations, so low levels of dissolved oxygen are not likely a threat to delta smelt. One possible exception to non-overlapping distribution may have occurred during September 2007, when delta smelt were captured at higher salinity levels than normal. One possible explanation for this was that a substantial *Microcystis* bloom may have pushed delta smelt farther towards the ocean than they would normally have gone (Baxter *et al.* 2008, pp. 12, 28).

Although negative impacts to individual delta smelt for contaminants have been shown, the overall extent of such cases, and impacts to the population as a whole, remain largely undocumented. However, because substantial uncertainties exist and the co-occurrence of delta smelt with contaminants has been documented, we conclude that contaminants may constitute a significant threat to delta smelt.

Vulnerability of Small Populations

Delta smelt are relatively concentrated in their rearing habitat during the fall,

making them vulnerable to normal, but damaging, environmental conditions such as droughts, contaminant spills, and predation. Small, isolated populations are more likely to lose genetic variability due to genetic drift (random genetic changes over time), and to suffer inbreeding depression due to the fixation of deleterious alleles (gene variants) (Lande 1999, pp. 11-17). Populations at low densities are often subject to Allee effects, which involve decreases in the ratio of offspring to adults as the population density decreases (Dennis 2002, p. 389). It is unknown if small population size may have contributed to delta smelt's most apparent decline.

Summary for Factor E

Based on a review of the best scientific and commercial information available, we find that the following additional natural or manmade factors pose significant ongoing threats to the delta smelt: entrainment by the State and Federal water export facilities and introduced species. Additional threats that are potentially significant are entrainment into power plant diversions, contaminants, and small population effects.

Finding

As required by the Act, we considered the five factors in assessing whether the delta smelt is threatened or endangered throughout all or a significant portion of its range. We carefully assessed the best scientific and commercial information available regarding whether reclassifying delta smelt from threatened to endangered may be warranted. We reviewed the information in our files, and information submitted to us after the publication of our 90–day finding (73 FR 39639) and during the reopened information collection period (73 FR 74674).

We believe there are many primary threats to the species: direct entrainments by State and Federal water export facilities (Factor E); summer and fall increases in salinity and water clarity (Factor A), and effects from introduced species (Factor E). Additional threats are predation by striped and largemouth bass and inland silversides (Factor C), entrainment into power plants (Factor E), contaminants (Factor E) and small population size (Factor E). Existing regulatory mechanisms (Factor D) have not proven adequate to halt the decline of delta smelt since the time of listing as a threatened species.

In March 2004, we completed a 5–year review for delta smelt in which we determined a change in status from threatened to endangered was not recommended. While none of the threats discussed above, other than apparent abundance, show significant differences from 2004, we now have strong evidence, not available at the time of our 5–year review, that at least some of those factors are endangering the species. The primary evidence is the continuing downward trend in delta smelt abundance indices since the significant decline that occurred in 2002 (CDFG 2008, p. 2). The 2002 decline was cited as a serious concern in 2004, but the delta smelt abundance indices had experienced significant downward trends in 1992, 1994, and 1996 (Service 2004, unpaginated App. B Midwater Trawl Abundance Index table). However, after each of those previous declines, the abundance indices seemingly rebounded. The 2003 abundance index, the most current information available for the 5–year review, showed a slight increase from the 2002 index. Therefore, we had no evidence to suggest a cycle different from what had been previously observed, and we expected that the delta smelt would improve from the 2002 decline. In the 5 years since our 5–year review, however, delta smelt abundance indices have continued to decrease. The most recent fall midwater trawl abundance index is the lowest ever recorded – about one-tenth the level it was in 2003. In addition, a 2005 population viability analysis calculated a 50 percent likelihood that the species could reach effective extinction (8,000 individuals) within 20 years (Bennett 2005, pp. 53-54).

We are still unable to determine with certainty which threats or combinations of threats are directly responsible for the decrease in delta smelt abundance. However, the apparent low abundance of delta smelt in concert with ongoing threats throughout its range indicates that the delta smelt is now in danger of extinction throughout its range. Therefore, based on a review of the best scientific and commercial information available, we find that the delta smelt meets the definition of an endangered species under the Act, and that it warrants reclassification from threatened to endangered. However, at this time, the promulgation of a formal rulemaking to reclassify delta smelt is precluded by higher priority actions.

We adopted guidelines on September 21, 1983 (48 FR 43098) to establish a rational system for utilizing available resources for the highest priority species when adding species to the Lists of Endangered or Threatened Wildlife and Plants or reclassifying species listed as threatened to endangered status. The system places greatest importance on the immediacy and magnitude of threats, but also factors in the level of taxonomic distinctiveness by assigning priority in descending order to monotypic genera, full species, and subspecies (or equivalently, distinct population segments of vertebrates). As a result of our analysis of the best available scientific and commercial information, we have assigned the delta smelt a Listing Priority Number of 2, based on high magnitude and immediacy of threats. The magnitude of the threats is considered to be high, because they occur rangewide and result in mortality or significantly reduce the reproductive capacity of the species. They are imminent because these threats are ongoing and, in some cases (e.g., nonnative species), considered irreversible. While we conclude that reclassifying the species as endangered is warranted, an immediate proposal to reclassify this species is precluded by other higher priority actions, which we address below.

Preclusion and Expeditious Progress

Preclusion is a function of the listing priority of a species in relation to the resources that are available and competing demands for those resources. Thus, in any given fiscal year (FY), multiple factors dictate whether it will be possible to undertake work on a proposed listing regulation or whether promulgation of such a proposal is warranted but precluded by higher-priority listing actions.

The resources available for listing actions are determined through the annual Congressional appropriations process. The appropriation for the Listing Program is available to support work involving the following listing actions: proposed and final listing rules; 90–day and 12–month findings on petitions to add species to the Lists of Endangered and Threatened Wildlife and Plants (Lists) or to change the status of a species from threatened to endangered; annual determinations on prior "warranted but precluded" petition findings as required under section 4(b)(3)(C)(i) of the Act; critical habitat petition findings; proposed and final rules designating critical habitat; and litigation-related, administrative, and program-management functions (including preparing and allocating budgets, responding to Congressional and public inquiries, and conducting public outreach regarding listing and critical habitat). The work involved in preparing various listing documents can be extensive and may include, but is not limited to: gathering and assessing the best scientific and commercial data

available and conducting analyses used as the basis for our decisions; writing and publishing documents; and obtaining, reviewing, and evaluating public comments and peer review comments on proposed rules and incorporating relevant information into final rules. The number of listing actions that we can undertake in a given year also is influenced by the complexity of those listing actions; that is, more complex actions generally are more costly. For example, during the past several years, the cost (excluding publication costs) for preparing a 12–month finding, without a proposed rule, has ranged from approximately $11,000 for one species with a restricted range and involving a relatively uncomplicated analysis to $305,000 for another species that is wide-ranging and involving a complex analysis.

We cannot spend more than is appropriated for the Listing Program without violating the Anti-Deficiency Act (see 31 U.S.C. § 1341(a)(1)(A)). In addition, in FY 1998 and for each fiscal year since then, Congress has placed a statutory cap on funds which may be expended for the Listing Program, equal to the amount expressly appropriated for that purpose in that fiscal year. This cap was designed to prevent funds appropriated for other functions under the Act (for example, recovery funds for removing species from the Lists), or for other Service programs, from being used for Listing Program actions (see House Report 105-163, 105th Congress, 1st Session, July 1, 1997).

Recognizing that designation of critical habitat for species already listed would consume most of the overall Listing Program appropriation, Congress also put a critical habitat subcap in place in FY 2002 and has retained it each subsequent year to ensure that some funds are available for other work in the Listing Program: "The critical habitat designation subcap will ensure that some funding is available to address other listing activities" (House Report No. 107 - 103, 107th Congress, 1st Session, June 19, 2001). In FY 2002 and each year until FY 2006, the Service has had to use virtually the entire critical habitat subcap to address court-mandated designations of critical habitat, and consequently none of the critical habitat subcap funds have been available for other listing activities. In FY 2007, we were able to use some of the critical habitat subcap funds to fund proposed listing determinations for high-priority candidate species. In FY 2009, while we were unable to use any of the critical habitat subcap funds to fund proposed listing determinations, we did use some of this money to fund the critical habitat portion of some proposed listing determinations, so that the proposed listing determination and proposed critical habitat designation could be combined into one rule, thereby being more efficient in our work. In FY 2010, we are using some of the critical habitat subcap funds to fund actions with statutory deadlines.

Thus, through the listing cap, the critical habitat subcap, and the amount of funds needed to address court-mandated critical habitat designations, Congress and the courts have in effect determined the amount of money available for other listing activities. Therefore, the funds in the listing cap, other than those needed to address court-mandated critical habitat for already listed species, set the limits on our determinations of preclusion and expeditious progress.

Congress also recognized that the availability of resources was the key element in deciding, when making a 12–month petition finding, whether we would prepare and issue a listing proposal or instead make a "warranted but precluded" finding for a given species. The Conference Report accompanying Public Law 97-304, which established the current statutory deadlines and the warranted-but-precluded finding, states (in a discussion on 90–day petition findings that by its own terms also covers 12–month findings) that the deadlines were "not intended to allow the Secretary to delay commencing the rulemaking process for any reason other than that the existence of pending or imminent proposals to list species subject to a greater degree of threat would make allocation of resources to such a petition [that is, for a lower-ranking species] unwise."

In FY 2010, expeditious progress is that amount of work that can be achieved with $10,471,000, which is the amount of money that Congress appropriated for the Listing Program (that is, the portion of the Listing Program funding not related to critical habitat designations for species that are already listed). However these funds are not enough to fully fund all our court-ordered and statutory listing actions in FY 2010, so we are using $1,114,417 of our critical habitat subcap funds in order to work on all of our required petition findings and listing determinations. This brings the total amount of funds we have for listing action in FY 2010 to $11,585,417. Starting in FY 2010, we are also using our funds to work on listing actions for foreign species since that work was transferred from the Division of Scientific Authority, International Affair Program to the Endangered Species Program. Our process is to make our determinations of preclusion on a nationwide basis to ensure that the species most in need of listing will be addressed first and also because we allocate our listing budget on a nationwide basis. The $11,585,417 is being used to fund work in the following categories: compliance with court orders and court-approved settlement agreements requiring that petition findings or listing determinations be completed by a specific date; section 4 (of the Act) listing actions with absolute statutory deadlines; essential litigation-related, administrative, and listing program-management functions; and high-priority listing actions for some of our candidate species. The allocations for each specific listing action are identified in the Service's FY 2010 Allocation Table (part of our administrative record).

In FY 2007, we had more than 120 species with an LPN of 2, based on our September 21, 1983, guidance for assigning an LPN for each candidate species (48 FR 43098). Using this guidance, we assign each candidate an LPN of 1 to 12, depending on the magnitude of threats (high vs. moderate to low), immediacy of threats (imminent or nonimminent), and taxonomic status of the species (in order of priority: monotypic genus (a species that is the sole member of a genus); species; or part of a species (subspecies, distinct population segment, or significant portion of the range)). The lower the listing priority number, the higher the listing priority (that is, a species with an LPN of 1 would have the highest listing priority). Because of the large number of high-priority species, we further ranked the candidate species with an LPN of 2 by using the following extinction-risk type criteria: International Union for the Conservation of Nature and Natural Resources (IUCN) Red list status/rank, Heritage rank (provided by NatureServe), Heritage threat rank (provided by NatureServe), and species currently with fewer than 50 individuals, or 4 or fewer populations. Those species with the highest IUCN rank (critically endangered), the highest Heritage rank (G1), the highest Heritage threat rank (substantial, imminent threats), and currently with fewer than 50 individuals, or fewer than 4 populations, comprised a group of approximately 40 candidate species ("Top 40"). These 40 candidate species have had the highest priority to receive funding to work on a proposed listing determination. As we work on proposed

and final listing rules for these 40 candidates, we are applying the ranking criteria to the next group of candidates with LPN of 2 and 3 to determine the next set of highest priority candidate species.

To be more efficient in our listing process, as we work on proposed rules for these species in the next several years, we are preparing multi-species proposals when appropriate, and these may include species with lower priority if they overlap geographically or have the same threats as a species with an LPN of 2. In addition, available staff resources are also a factor in determining high-priority species provided with funding. Finally, proposed rules for reclassification of threatened species to endangered are lower priority, since as listed species, they are already afforded the protection of the Act and implementing regulations.

We assigned the delta smelt an LPN of 2, based on our finding that the species faces immediate and high magnitude threats from the present or threatened destruction, modification, or curtailment of its habitat; the inadequacy of existing regulatory mechanisms; and other natural or manmade Factors. One or more of the threats discussed above are occurring in each known population. These threats are ongoing and, in some cases (e.g., nonnative species), considered irreversible. Under the 1983 Guidelines, a "species" facing imminent high-magnitude threats is assigned an LPN of 1, 2, or 3 depending on its taxonomic status. Because the delta smelt is a species, but not a monotypic genus, we assigned it an LPN of 2. We find that reclassification to endangered status for the delta smelt is currently warranted but precluded by higher priority listing actions. One of the primary reasons that the reclassification of delta smelt is considered a lower priority is that the species is currently listed as threatened, and therefore already receives certain protections under the Act. The Service promulgated regulations extending take prohibitions for endangered species under section 9 to threatened species (50 CFR 17.31). Prohibited actions under section 9 include, but are not limited to, take (i.e., to harass, harm, pursue, hunt, shoot, wound, kill, trap, capture, or collect, or attempt to engage in such activity). Other protections include those under section 7(a)(2) of the Act whereby Federal agencies must insure that any action they authorize, fund, or carry out is not likely to jeopardize the continued existence of any endangered or threatened species.

Given the above-mentioned funding constraints, the Service's priority is to list as threatened or endangered all candidate species (and thus provides protections under the Act) before reclassifying threatened species that already receive protection under the Act. Therefore, work on a proposed reclassification from threatened to endangered for the delta smelt is precluded by work on: (1) listing determinations for listing actions with absolute statutory, court-ordered, or court-approved deadlines, and final listing determinations for those species that have been proposed for listing; and (2) candidate species and reclassifications of other higher priority threatened species (i.e., species with LPN of 1). This work includes all the actions listed in the tables below under expeditious progress.

As explained above, a determination that reclassification is warranted but precluded must also demonstrate that expeditious progress is being made to add or remove qualified species to and from the Lists of Endangered and Threatened Wildlife and Plants. (Although we do not discuss it in detail here, we are also making expeditious progress in removing species from the list under the Recovery program, which is funded by a separate line item in the budget of the Endangered Species Program. As explained above in our description of the statutory cap on Listing Program funds, the Recovery Program funds and actions supported by them cannot be considered in determining expeditious progress made in the Listing Program.) As with our "precluded" finding, expeditious progress in adding qualified species to the Lists is a function of the resources available and the competing demands for those funds. Given that limitation, we find that we have made progress in FY 2009 in the Listing Program and will continue to make progress in FY 2010. This progress included preparing and publishing the following determinations:

FY 2010 COMPLETED LISTING ACTIONS

Publication Date	Title	Actions	FR Pages
10/08/2009	Listing *Lepidium papilliferum* (Slickspot Peppergrass) as a Threatened Species Throughout Its Range	Final Listing Threatened	74 FR 52013-52064
10/27/2009	90-day Finding on a Petition To List the American Dipper in the Black Hills of South Dakota as Threatened or Endangered	Notice of 90–day Petition Finding, Not substantial	74 FR 55177-55180
10/28/2009	Status Review of Arctic Grayling *(Thymallus arcticus*) in the Upper Missouri River System	Notice of Intent to Conduct Status Review	74 FR 55524-55525
11/03/2009	Listing the British Columbia Distinct Population Segment of the Queen Charlotte Goshawk Under the Endangered Species Act: Proposed rule.	Proposed Listing Threatened	74 FR 56757-56770
11/03/2009	Listing the Salmon-Crested Cockatoo as Threatened Throughout Its Range with Special Rule	Proposed Listing Threatened	74 FR 56770-56791
11/23/2009	Status Review of Gunnison sage-grouse *(Centrocercus minimus*)	Notice of Intent to Conduct Status Review	74 FR 61100-61102
12/03/2009	12-Month Finding on a Petition to List the Black-tailed Prairie Dog as Threatened or Endangered	Notice of 12 month petition finding, Not warranted	74 FR 63343-63366

FY 2010 COMPLETED LISTING ACTIONS—Continued

Publication Date	Title	Actions	FR Pages
12/03/2009	90-Day Finding on a Petition to List Sprague's Pipit as Threatened or Endangered	Notice of 90–day Petition Finding, Substantial	74 FR 63337-63343
12/15/2009	90-Day Finding on Petitions To List Nine Species of Mussels From Texas as Threatened or Endangered With Critical Habitat	Notice of 90–day Petition Finding, Substantial	74 FR 66260-66271
12/16/2009	Partial 90-Day Finding on a Petition to List 475 Species in the Southwestern United States as Threatened or Endangered With Critical Habitat; Proposed Rule	Notice of 90–day Petition Finding, Not substantial and Subtantial	74 FR 66865-66905
12/17/2009	12–month Finding on a Petition To Change the Final Listing of the Distinct Population Segment of the Canada Lynx To Include New Mexico	Notice of 12 month petition finding, Warranted but precluded	74 FR 66937-66950
1/05/2010	Listing Foreign Bird Species in Peru and Bolivia as Endangered Throughout Their Range	Proposed Listing Endangered	75 FR 605-649
1/05/2010	Listing Six Foreign Birds as Endangered Throughout Their Range	Proposed Listing Endangered	75 FR 286-310
1/05/2010	Withdrawal of Proposed Rule to List Cook's Petrel	Proposed rule, withdrawal	75 FR 310-316
1/05/2010	Final Rule to List the Galapagos Petrel and Heinroth's Shearwater as Threatened Throughout Their Ranges	Final Listing Threatened	75 FR 235-250
1/20/2010	Initiation of Status Review for *Agave eggersiana* and *Solanum conocarpum*	Notice of Intent to Conduct Status Review	75 FR 3190-3191
2/09/2010	12–month Finding on a Petition to List the American Pika as Threatened or Endangered; Proposed Rule	Notice of 12–month petition finding, Not warranted	75 FR 6437-6471
2/25/2010	12-Month Finding on a Petition To List the Sonoran Desert Population of the Bald Eagle as a Threatened or Endangered Distinct Population Segment	Notice of 12–month petition finding, Not warranted	75 FR 8601-8621
2/25/2010	Withdrawal of Proposed Rule To List the Southwestern Washington/Columbia River Distinct Population Segment of Coastal Cutthroat Trout *(Oncorhynchus clarki clarki*) as Threatened	Withdrawal of Proposed Rule to List	75 FR 8621-8644
3/18/2010	90-Day Finding on a Petition to List the Berry Cave salamander as Endangered	Notice of 90–day Petition Finding, Substantial	75 FR 13068-13071
3/23 /2010	90-Day Finding on a Petition to List the Southern Hickorynut Mussel *(Obovaria jacksoniana*) as Endangered or Threatened	Notice of 90–day Petition Finding, Not substantial	75 FR 13717-13720
3/23 /2010	90-Day Finding on a Petition to List the Striped Newt as Threatened	Notice of 90–day Petition Finding, Substantial	75 FR 13720-13726
3/23/2010	12-Month Findings for Petitions to List the Greater Sage-Grouse *(Centrocercus urophasianus*)as Threatened or Endangered	Notice of 12–month petition finding, Warranted but precluded	75 FR 13910-14014
3/31/2010	12-Month Finding on a Petition to List the Tucson Shovel-Nosed Snake *(Chionactis occipitalis klauberi*) as Threatened or Endangered with Critical Habitat	Notice of 12–month petition finding Warranted but precluded	75 FR 16050-16065

Our expeditious progress also includes work on listing actions that we funded in FY 2010 but have not yet been completed to date. These actions are listed below. Actions in the top section of the table are being conducted under a deadline set by a court. Actions in the middle section of the table are being conducted to meet statutory timelines, that is, timelines required under the Act. Actions in the bottom section of the table are high-priority listing actions. These actions include work primarily on species with an LPN of 2, and selection of these species is

partially based on available staff resources, and when appropriate, include species with a lower priority if they overlap geographically or have the same threats as the species with the high priority. Including these species together in the same proposed rule results in considerable savings in time and funding, as compared to preparing separate proposed rules for each of them in the future.

ACTIONS FUNDED IN FY 2010 BUT NOT YET COMPLETED

Species	Action
Actions Subject to Court Order/Settlement Agreement	
6 Birds from Eurasia	Final listing determination
Flat-tailed horned lizard	Final listing determination
6 Birds from Peru	Proposed listing determination
Sacramento splittail	Proposed listing determination
Big Lost River whitefish	12–month petition finding
White-tailed prairie dog	12–month petition finding
Gunnison sage-grouse	12–month petition finding
Wolverine	12–month petition finding
Arctic grayling	12–month petition finding
Agave eggergsiana	12–month petition finding
Solanum conocarpum	12–month petition finding
Mountain plover	12–month petition finding
Hermes copper butterfly	90–day petition finding
Thorne's hairstreak butterfly	90–day petition finding
Actions with Statutory Deadlines	
Casey's june beetle	Final listing determination
Georgia pigtoe, interrupted rocksnail, and rough hornsnail	Final listing determination
2 Hawaiian damselflies	Final listing determination
African penguin	Final listing determination
3 Foreign bird species (Andean flamingo, Chilean woodstar, St. Lucia forest thrush)	Final listing determination
5 Penguin species	Final listing determination
Southern rockhopper penguin – Campbell Plateau population	Final listing determination
5 Bird species from Colombia and Ecuador	Final listing determination
7 Bird species from Brazil	Final listing determination
Queen Charlotte goshawk	Final listing determination
Salmon crested cockatoo	Proposed listing determination
Black-footed albatross	12–month petition finding
Mount Charleston blue butterfly	12–month petition finding
Least chub[1]	12–month petition finding
Mojave fringe-toed lizard[1]	12–month petition finding
Pygmy rabbit (rangewide)[1]	12–month petition finding
Kokanee – Lake Sammamish population[1]	12–month petition finding
Cactus ferruginous pygmy-owl[1]	12–month petition finding

ACTIONS FUNDED IN FY 2010 BUT NOT YET COMPLETED—Continued

Species	Action
Northern leopard frog	12–month petition finding
Tehachapi slender salamander	12–month petition finding
Coqui Llanero	12–month petition finding
Susan's purse-making caddisfly	12–month petition finding
White-sided jackrabbit	12–month petition finding
Jemez Mountains salamander	12–month petition finding
Dusky tree vole	12–month petition finding
Eagle Lake trout[1]	12–month petition finding
29 of 206 species	12–month petition finding
Desert tortoise – Sonoran population	12–month petition finding
Gopher tortoise – eastern population	12–month petition finding
Amargosa toad	12–month petition finding
Wyoming pocket gopher	12–month petition finding
Pacific walrus	12–month petition finding
Wrights marsh thistle	12–month petition finding
67 of 475 southwest species	12–month petition finding
9 Southwest mussel species	12–month petition finding
14 parrots (foreign species)	12–month petition finding
Southeastern pop snowy plover & wintering pop. of piping plover[1]	90–day petition finding
Eagle Lake trout[1]	90–day petition finding
Ozark chinquapin[1]	90–day petition finding
Smooth-billed ani[1]	90–day petition finding
Bay Springs salamander[1]	90–day petition finding
Mojave ground squirrel[1]	90–day petition finding
32 species of snails and slugs[1]	90–day petition finding
Calopogon oklahomensis[1]	90–day petition finding
42 snail species	90–day petition finding
White-bark pine	90–day petition finding
Puerto Rico harlequin	90–day petition finding
Fisher – Northern Rocky Mtns. population	90–day petition finding
Puerto Rico harlequin butterfly[1]	90–day petition finding
42 snail species (Nevada & Utah)	90–day petition finding
HI yellow-faced bees	90–day petition finding
Red knot *roselaari* subspecies	90–day petition finding
Honduran emerald	90–day petition finding
Peary caribou	90–day petition finding
Western gull-billed tern	90–day petition finding

ACTIONS FUNDED IN FY 2010 BUT NOT YET COMPLETED—Continued

Species	Action
Plain bison	90–day petition finding
Giant Palouse earthworm	90–day petition finding
Mexican gray wolf	90–day petition finding
Spring Mountains checkerspot butterfly	90–day petition finding
Spring pygmy sunfish	90–day petition finding
San Francisco manzanita	90–day petition finding
Bay skipper	90–day petition finding
Unsilvered fritillary	90–day petition finding
Texas kangaroo rat	90–day petition finding
Spot-tailed earless lizard	90–day petition finding
Eastern small-footed bat	90–day petition finding
Northern long-eared bat	90–day petition finding
Prairie chub	90–day petition finding
10 species of Great Basin butterfly	90–day petition finding
High Priority Listing Actions[3]	
19 Oahu candidate species[3] (16 plants, 3 damselflies) (15 with LPN = 2, 3 with LPN = 3, 1 with LPN =9)	Proposed listing
17 Maui-Nui candidate species[3] (14 plants, 3 tree snails) (12 with LPN = 2, 2 with LPN = 3, 3 with LPN = 8)	Proposed listing
Sand dune lizard[3] (LPN = 2)	Proposed listing
2 Arizona springsnails[3] *(Pyrgulopsis bernadina* (LPN = 2), *Pyrgulopsis trivialis* (LPN = 2))	Proposed listing
2 New Mexico springsnails[3] *(Pyrgulopsis chupaderae* (LPN = 2), *Pyrgulopsis thermalis* (LPN = 11))	Proposed listing
2 mussels[3] (rayed bean (LPN = 2), snuffbox No LPN)	Proposed listing
2 mussels[3] (sheepnose (LPN = 2), spectaclecase (LPN = 4),)	Proposed listing
Ozark hellbender[2] (LPN = 3)	Proposed listing
Altamaha spinymussel[3] (LPN = 2)	Proposed listing
5 southeast fish[3] (rush darter (LPN = 2), chucky madtom (LPN = 2), yellowcheek darter (LPN = 2), Cumberland darter (LPN = 5), laurel dace (LPN = 5))	Proposed listing
8 southeast mussels (southern kidneyshell (LPN = 2), round ebonyshell (LPN = 2), Alabama pearlshell (LPN = 2), southern sandshell (LPN = 5), fuzzy pigtoe (LPN = 5), Choctaw bean (LPN = 5), narrow pigtoe (LPN = 5), and tapered pigtoe (LPN = 11))	Proposed listing
3 Colorado plants[3] (Pagosa skyrocket *(Ipomopsis polyantha*) (LPN = 2), Parchute beardtongue *(Penstemon debilis*) (LPN = 2), Debeque phacelia *(Phacelia submutica*) (LPN = 8))	Proposed listing

[1] Funds for listing actions for these species were provided in previous FYs.
[2] We funded a proposed rule for this subspecies with an LPN of 3 ahead of other species with LPN of 2, because the threats to the species were so imminent and of a high magnitude that we considered emergency listing if we were unable to fund work on a proposed listing rule in FY 2008.
[3] Funds for these high-priority listing actions were provided in FY 2008 or 2009.

We have endeavored to make our listing actions as efficient and timely as possible, given the requirements of the relevant law and regulations, and constraints relating to workload and personnel. We are continually considering ways to streamline processes or achieve economies of scale, such as by batching related actions together. Given our limited budget for implementing section 4 of the Act, these actions described above collectively constitute expeditious progress.

We intend that any proposed reclassification of the delta smelt will be as accurate as possible. Therefore, we will continue to accept additional information and comments from all concerned governmental agencies, the scientific community, industry, or any

other interested party concerning this finding.

References Cited

A complete list of references cited is available on the Internet at *http://www.regulations.gov* and upon request from the Sacramento Fish and Wildlife Office (see **ADDRESSES** section).

Author

The primary authors of this notice are the staff members of the Bay-Delta Fish and Wildlife Office (see **ADDRESSES** section).

Authority

The authority for this action is section 4 of the Endangered Species Act of 1973, as amended (16 U.S.C. 1531 *et seq.*).

Dated: March 26, 2010

Jeffrey L. Underwood,

Acting Director, Fish and Wildlife Service.

[FR Doc. 2010–7904 Filed 4–6–10; 8:45 am]

BILLING CODE 4310–55–S

Notices

Federal Register

Vol. 75, No. 66

Wednesday, April 7, 2010

This section of the FEDERAL REGISTER contains documents other than rules or proposed rules that are applicable to the public. Notices of hearings and investigations, committee meetings, agency decisions and rulings, delegations of authority, filing of petitions and applications and agency statements of organization and functions are examples of documents appearing in this section.

DEPARTMENT OF AGRICULTURE

Submission for OMB Review; Comment Request

April 1, 2010.

The Department of Agriculture has submitted the following information collection requirement(s) to OMB for review and clearance under the Paperwork Reduction Act of 1995, Public Law 104–13. Comments regarding (a) whether the collection of information is necessary for the proper performance of the functions of the agency, including whether the information will have practical utility; (b) the accuracy of the agency's estimate of burden including the validity of the methodology and assumptions used; (c) ways to enhance the quality, utility and clarity of the information to be collected; (d) ways to minimize the burden of the collection of information on those who are to respond, including through the use of appropriate automated, electronic, mechanical, or other technological collection techniques or other forms of information technology should be addressed to: Desk Officer for Agriculture, Office of Information and Regulatory Affairs, Office of Management and Budget (OMB), *OIRA_Submission@OMB.EOP.GOV* or fax (202) 395–5806 and to Departmental Clearance Office, USDA, OCIO, Mail Stop 7602, Washington, DC 20250–7602. Comments regarding these information collections are best assured of having their full effect if received within 30 days of this notification. Copies of the submission(s) may be obtained by calling (202) 720–8958.

An agency may not conduct or sponsor a collection of information unless the collection of information displays a currently valid OMB control number and the agency informs potential persons who are to respond to the collection of information that such persons are not required to respond to the collection of information unless it displays a currently valid OMB control number.

Food and Nutrition Service

Title: SNAP, FNS Form 388 and 388A, State Issuance and Participation Estimates.

OMB Control Number: 0584–0081.

Summary of Collection: Section 18(b) of the Food Stamp Act of 1977, as amended August 14, 1979 by Pubic Law 96–58, requires that "In any fiscal year, the Secretary shall limit the value of those allotments issued to an amount not in excess of the appropriation for such fiscal year." Timely State monthly issuance estimates are necessary for the Food and Nutrition Service (FNS) to ensure that it remains within the appropriation and will have a direct effect upon the manner in which allotments would be reduced when necessary. FNS uses the FNS–388 report to obtain monthly statewide estimated or actual issuance and participation data for the current and previous months, and the actual participation data for the second preceding month. For the report months of January and July, the participation data must be categorized as non-assistance (NA) and public assistance (PA) and provided for each project areas. This NA and PA participation data is captured on the FNS–388A.

Need and Use of the Information: The FNS–388 and FNS–388A reports provide the necessary data for an early warning system to enable the Department to fulfill the requirements of Section 18(b) of the Food Stamp Act. In addition, the data is used to (1) validate the Annual Food Stamp Household Characteristic Survey; (2) to compile a Statistical Summary Report which is used for special studies and in response to Congressional and other inquiries; and (3) to compare against the reconciliation points' FNS–46 issuance data (for electronic benefit transfer (EBT), cash-out, and alternative Issuance) for indication of accountability problems. FNS has also used the project area data to determine where to demonstrate pilot projects such as a test of school-based SNAP outreach initiatives.

Description of Respondents: State, Local, or Tribal Government.

Number of Respondents: 53.

Frequency of Responses: Recordkeeping; Reporting: Monthly.

Total Burden Hours: 5,243.

Ruth Brown,

Departmental Information Collection Clearance Officer.

[FR Doc. 2010–7812 Filed 4–6–10; 8:45 am]

BILLING CODE 3410–30–P

DEPARTMENT OF AGRICULTURE

Submission for OMB Review; Comment Request

April 1, 2010.

The Department of Agriculture has submitted the following information collection requirement(s) to OMB for review and clearance under the Paperwork Reduction Act of 1995, Public Law 104–13. Comments regarding (a) whether the collection of information is necessary for the proper performance of the functions of the agency, including whether the information will have practical utility; (b) the accuracy of the agency's estimate of burden including the validity of the methodology and assumptions used; (c) ways to enhance the quality, utility and clarity of the information to be collected; (d) ways to minimize the burden of the collection of information on those who are to respond, including through the use of appropriate automated, electronic, mechanical, or other technological collection techniques or other forms of information technology should be addressed to: Desk Officer for Agriculture, Office of Information and Regulatory Affairs, Office of Management and Budget (OMB), *OIRA_Submission@OMB.EOP.GOV* or fax (202) 395–5806 and to Departmental Clearance Office, USDA, OCIO, Mail Stop 7602, Washington, DC 20250–7602. Comments regarding these information collections are best assured of having their full effect if received within 30 days of this notification. Copies of the submission(s) may be obtained by calling (202) 720–8681.

An agency may not conduct or sponsor a collection of information unless the collection of information displays a currently valid OMB control number and the agency informs potential persons who are to respond to the collection of information that such persons are not required to respond to the collection of information unless it

displays a currently valid OMB control number.

Rural Utilities Service

Title: RUS Form 444, "Wholesale Power Contracts".

OMB Control Number: 0572–0089.

Summary of Collection: The Rural Electrification Act of 1936 (RE Act) as amended (7 U.S.C. 901 *et seq.*), authorizes the Rural Utilities Service (RUS) to make and guaranteed loans that will enable rural consumers to obtain electric power. Rural consumers formed non-profit electric distribution cooperatives, groups of these distribution cooperatives banded together to form Generation and Transmission cooperatives (G&T's) that generate or purchase power and transmit the power to the distribution systems. All RUS and G&T borrowers will enter into a Wholesale Power Contract with their distribution members by using RUS Form 444.

Need and Use of the Information: To fulfill the purposes of the RE Act RUS will collect information to improve the credit quality and credit worthiness of loans and loan guarantees to G&T borrowers. RUS works closely with lending institutions that provide supplemental loan funds to borrowers.

Description of Respondents: Not-for profit institutions; business or other for-profit.

Number of Respondents: 102.

Frequency of Responses: Reporting: Quarterly.

Total Burden Hours: 612.

Rural Utilities Service

Title: Technical Assistance and Training Grant Program—Recovery Act Funding.

OMB Control Number: 0572–0144.

Summary of Collection: The American Recovery and Reinvestment Act of 2009 (Recovery Act) provides for the availability of $5 million in assistance to the Technical Assistance and Training (TAT) competitive grant program as authorized by Section 306 of the Consolidated Farm and Rural Development Act (CONACT). 7 U.S.C. 1926, authorizes Rural Utilities Service (RUS) to administer the TAT program to make loans and grants to public agencies, American Indian tribes, and nonprofit corporations. The grants fund the development of drinking water, wastewater, and solid waste disposal facilities in rural areas with populations of up to 10,000 residents.

Need and Use of the Information: Nonprofit organizations applying for TAT grants must submit a pre-application, which includes an application form, narrative proposal, various other forms, certifications and supplemental information. RUS staff will use the information collected to determine applicant eligibility, project feasibility, and the applicant's ability to meet the grant and regulatory requirements. RUS will review the information, evaluate it, and, if the applicant and project are eligible for further competition, invite the applicant to submit a formal application. Without the requested information, RUS could not make awards consistent with the purposes of the Recovery Act. RUS also could not determine whether applicants meet the requirements that the Recovery Act establishes for recordkeeping requirements.

Description of Respondents: Not-for-profit institutions.

Number of Respondents: 15.

Frequency of Responses: Reporting: Quarterly; Annually; On occasion.

Total Burden Hours: 472.

Charlene Parker,

Departmental Information Collection Clearance Officer.

[FR Doc. 2010–7813 Filed 4–6–10; 8:45 am]

BILLING CODE 3410–15–P

DEPARTMENT OF AGRICULTURE

Agricultural Marketing Service

[Doc. No. AMS–PY–10–0013]

Notice of Request for an Extension of a Currently Approved Information Collection

AGENCY: Agricultural Marketing Service, USDA.

ACTION: Notice and request for comments.

SUMMARY: In accordance with the Paperwork Reduction Act of 1995 (44 U.S.C. Chapter 35), this notice announces the intention of the Agricultural Marketing Service (AMS) to request an extension from the Office of Management and Budget (OMB), for a currently approved information collection in support of customer-focused improvement initiatives for USDA-procured poultry, livestock, fruit, and vegetable products.

DATES: Comments received by June 7, 2010 will be considered.

ADDRESSES: Interested persons are invited to submit written comments on the Internet at *http://www.regulations.gov* or to David Bowden, Jr., Chief, Standards, Promotions, and Technology Branch, Poultry Programs, Agricultural Marketing Service, U.S. Department of Agriculture, 1400 Independence Avenue, SW., Stop 0259, Washington, DC 20250–0259, (202) 690–3148. Comments should reference the docket number and the date and page number of this issue of the **Federal Register**. All comments will be available for public inspection at the above address during regular business hours, or can be viewed at: *http://www.regulations.gov.* All comments received will be posted without change, including any personal information provided. The identity of anyone submitting comments will also be made public.

Additional Information: Contact David Bowden, Jr., Chief, Standards, Promotions, and Technology Branch, Poultry Programs, Agricultural Marketing Service, U.S. Department of Agriculture, 1400 Independence Avenue, SW., Stop 0259, Washington, DC 20250–0259, (202) 690–3148.

SUPPLEMENTARY INFORMATION:

Title: Customer Service Survey for USDA-Donated Food Products.

OMB Number: 0581–0182.

Expiration Date, as approved by OMB: 11/30/2010.

Type of Request: Extension of a currently approved information collection.

Abstract: Starting with a 1996 pilot project by AMS, customers have been able to use the Customer Opinion Postcard, Form AMS–11, to voluntarily submit their comments concerning poultry, livestock, fruit, and vegetable products procured by USDA for the school lunch program that is authorized by the Richard B. Russell National School Lunch Act (42 U.S.C. 1751 *et seq.*) and other domestic food assistance programs. These cards have proven to be a quick and inexpensive way for AMS to get customer opinions and feedback about USDA commodities, thereby helping the Agency to make improvements to its products. AMS would like to continue the use of the customer opinion postcards to get voluntary customer feedback on various products each year by re-approval of the Customer Opinion Postcard, Form AMS–11. In this way, AMS will be better able to meet the quality expectations of school food service personnel and the 31 million school children who consume these products daily as well as recipients of other food assistance programs.

Information about customers' perceptions of USDA-procured products is sought as a sound management practice to support AMS activities under 7 CFR 250, regulations for "Donation of Foods for Use in the United States, Its Territories and Possessions and Areas Under Its

Jurisdiction." The information collected will be used primarily by authorized representatives of USDA (AMS, and the Food and Nutrition Service) and shared with State government agencies and product suppliers. To enable customers to mail cards directly to the commodity program that is soliciting the information, several versions of Form AMS–11 will be used, each with a different return address. Response information about products produced by a particular supplier may be shared with that supplier. Similarly, response information from customers located in a particular State may be shared with government agencies within that State.

AMS is committed to complying with the E-Government Act, which requires Government agencies in general to provide the public the option of submitting information or transacting business electronically to the maximum extent possible.

Estimate of Burden: Public reporting burden for this collection of information is estimated to average 0.083 hours (5 minutes) per response.

Respondents: State, local, and tribal governments, and not-for-profit businesses.

Estimated Number of Respondents: 8,400.

Estimated Number of Responses per Respondent: 1.

Estimated Total Annual Burden on Respondents: 700 hours.

Copies of this information collection can be obtained from David Bowden, Jr., Chief, Standards, Promotions, and Technology Branch, at (202) 690–3148.

Send comments regarding, but not limited to, the following: (a) Whether the collection of information is necessary for the proper performance of the functions of the agency, including whether the information will have practical utility; (b) the accuracy of the agency's estimate of burden, including the validity of the methodology and assumptions used; (c) ways to enhance the quality, utility, and clarity of the information to be collected; and (d) ways to minimize the burden of the collection of information on those who are to respond, including through the use of appropriate automated, electronic, mechanical, or other technological collection techniques or other forms of information technology.

Interested persons are invited to submit written comments on the Internet at *http://www.regulations.gov* or to David Bowden, Jr., Chief, Standards, Promotions, and Technology Branch, Poultry Programs, Agricultural Marketing Service, U.S. Department of Agriculture, 1400 Independence Avenue, SW., Stop 0259, Washington, DC 20250–0259, (202) 690–3148. Comments should reference the docket number and the date and page number of this issue of the **Federal Register.** All comments will be available for public inspection at the above address during regular business hours, or can be viewed at: *http://www.regulations.gov.*

All responses to this notice will be summarized and included in the request for OMB approval. All comments, including any personal information provided, will be made publically viewable as a matter of public record.

Dated: April 2, 2010.

Rayne Pegg,

Administrator, Agricultural Marketing Service.

[FR Doc. 2010–7855 Filed 4–6–10; 8:45 am]

BILLING CODE 3410–02–P

DEPARTMENT OF AGRICULTURE

Commodity Credit Corporation

Cooperative Conservation Partnership Initiative—Chesapeake Bay Watershed

AGENCY: Commodity Credit Corporation and Natural Resources Conservation Service, Department of Agriculture.

ACTION: Notice of request for proposals.

SUMMARY: The Chief of the Natural Resources Conservation Service (NRCS) who is Vice President of the Commodity Credit Corporation (CCC), announces the availability of technical and financial assistance funding in fiscal year (FY) 2010 through the Cooperative Conservation Partnership Initiative (CCPI) to eligible participants in the Chesapeake Bay Watershed. Special priority consideration will be given to applications/projects in the watersheds of the Susquehanna, Shenandoah, Potomac (North and South), and Patuxent Rivers (see attached map). In FY 2010, NRCS will make Environmental Quality Incentives Program (EQIP) and Wildlife Habitat Incentive Program (WHIP) funds available to owners and operators of agricultural and nonindustrial private forest lands in approved CCPI project areas. This notice is issued to solicit proposals from potential partners who seek to enter into partnership agreements with NRCS to help agricultural producers address Chesapeake Bay Watershed Initiatives (CBWI) objectives by implementing conservation practices on agricultural land to improve water quality, restore wetlands, and enhance wildlife habitat.

DATES: *Effective Date:* The notice of request is effective April 7, 2010.

Eligible partners may submit proposals by mail or via courier.

- *By mail:* proposals must be postmarked by May 24, 2010.
- *By courier or hand delivery:* proposals must be delivered by May 24, 2010.

ADDRESSES: Written proposals should be submitted to the addresses identified below, with copies to the appropriate NRCS State Conservationist whose names and addresses are identified as an attachment to this notice. If a project is multi-State in scope, all State Conservationists in the proposed project area must be sent the proposal for review.

- *By mail:* Gregory K. Johnson, Director, Financial Assistance Programs Division, Department of Agriculture, Natural Resources Conservation Service, "CBWI–CCPI," 1400 Independence Avenue, SW., Room 5239 South Building, Washington, DC 20250.

Note: Registered or Certified Mail to a post office will not be accepted.

- *By courier:* Gregory K. Johnson, Director, Financial Assistance Programs Division, Department of Agriculture, Natural Resources Conservation Service, "CBWI–CCPI Proposal," 1400 Independence Avenue SW., Room 5239 South Building, Washington, DC 20250. Proposals will be accepted between 9 a.m. and 4 p.m., Monday through Friday, except Federal Holidays. Please ask the guard at the entrance to the South Building to call (202) 720–1845.

Note: Proposals submitted via fax, e-mail, or after the deadline date listed in this notice will not be considered.

FOR FURTHER INFORMATION CONTACT: Gregory Johnson, Director, Financial Assistance Programs Division, Department of Agriculture, Natural Resources Conservation Service, 1400 Independence Avenue, SW., Room 5239 South Building, Washington, DC 20250, Telephone: (202) 720–1845; Fax: (202) 720–4265; or E-mail: *CCPI@wdc.usda.gov.* Additional information regarding CCPI is available at the following NRCS Web page: *http://www.nrcs.usda.gov/programs/CCPI/.*

Persons with disabilities who require alternative means for communication (Braille, large print, audio tape, *etc.*) should contact the USDA TARGET Center at: (202) 720–2600 (voice and TDD).

SUPPLEMENTARY INFORMATION:

Background

The Chesapeake Bay is a national treasure. Agriculture is an important segment of the Chesapeake Bay

economy and landscape, providing food, feed, and fiber for the area, Nation, and other countries. Agricultural and forestry operations can have unintended impacts of delivering excess nutrients and sediment to the Bay. Maintaining a healthy, sustainable, agricultural economy is an important consideration in protecting and restoring the Chesapeake Bay. Through a voluntary conservation approach, NRCS is working with landowners and operators to enhance agricultural and forest landscapes that provide agricultural products, increase carbon sequestration, and contribute to a healthy Chesapeake Bay ecosystem and agricultural economy.

The Chesapeake Bay Watershed includes over 44 million acres in six States and the District of Columbia. Agricultural and forest land accounts for 75 percent of the Chesapeake Bay Watershed. Consequently, the stewardship of these lands has a tremendous influence on the quality of natural resources in the watershed. Through the CBWI–CCPI, NRCS will provide additional technical and financial assistance to producers in the Chesapeake Bay Watershed to plan and apply conservation practices to improve water quality, restore wetlands, and enhance wildlife habitat. Additional information about this initiative can be found at: *http://www.nrcs.usda.gov/feature/chesapeakebay/chesapeakebay.html*.

Availability of Funding

Effective upon publication of this notice, up to $5 million of EQIP and WHIP financial assistance will be available in FY 2010; approximately $500,000 of the $5 million is reserved for multi-State projects. The State Conservationist or Chief will enter into multi-year partnership agreements with the selected, eligible partners which may include State and local governments, Federally recognized Indian Tribes, producer associations, farmer cooperatives, institutions of higher education, and nongovernmental organizations with a history of working cooperatively with producers.

NRCS will enter into partnership agreements with the partners whose applications are selected to provide financial and technical assistance to owners and operators of agricultural and nonindustrial private forest lands to address priority natural resource concerns in the Chesapeake Bay Watershed. Special priority consideration will be given to applications/projects in the watersheds of the Susquehanna, Shenandoah, Potomac (North and South), and Patuxent Rivers. The proposals will be evaluated through a competitive process and in accordance with the criteria established in this notice. After the Chief approves and announces the proposals selected, agricultural producers and nonindustrial private forest landowners (NIPFs) within the approved project areas may submit applications directly to NRCS for one or both of the following programs that are approved for the project: EQIP or WHIP.

This is not a grant program, and all Federal funds made available through this request for proposals will be paid directly to producers through program contract agreements. No technical assistance funding may be provided to the partner through the CBWI–CCPI partnership agreement. However, if requested by a partner whose proposal has been selected, the State Conservationist may consider entering into a separate contribution agreement with the partner to provide funding for delivery of technical services to help agricultural producers and NIPFs participate in an approved project.

Individual agricultural producers and NIPFs are not eligible for CBWI–CCPI partnership agreements. No Federal CBWI–CCPI funding may be used to cover administrative expenses of partners. Administrative activities include any indirect or direct costs relating to submitting or implementing the project proposal.

Definitions

Agricultural land means cropland, grassland, rangeland, pasture, and other agricultural land on which agricultural and forest-related products or livestock are produced and resource concerns may be addressed. Other agricultural lands may include cropped woodland, marshes, incidental areas included in the agricultural operation, and other types of agricultural land used for production of livestock.

Applicant means a person, legal entity, joint operation, or Tribe that has an interest in an agricultural or forestry operation, as defined in 7 CFR part 1400, who has requested to participate in EQIP or WHIP.

Beginning Farmer or Rancher means a person or legal entity who:

(a) Has not operated a farm or ranch, or who has operated a farm or ranch for not more than 10 consecutive years. This requirement applies to all members of an entity who will materially and substantially participate in the operation of the farm or ranch.

(b) In the case of a contract with an individual, individually, or with the immediate family, material and substantial participation requires that the individual provide substantial day-to-day labor and management of the farm or ranch consistent with the practices in the county or State where the farm is located.

(c) In the case of a contract with an entity or joint operation, all members must materially and substantially participate in the operation of the farm or ranch. Material and substantial participation requires that each of the members provide some amount of the management or labor necessary for day-to-day activities, such that if each of the members did not provide these inputs, operation of the farm or ranch would be seriously impaired.

Chief means Chief of the Natural Resources Conservation Service, or designee.

Conservation Activity Plan means a resource-specific conservation plan prepared by a certified Technical Service Provider (TSP) as authorized by the Food, Conservation, and Energy Act of 2008 (2008 Act) for financial assistance payment through EQIP.

Conservation planning means using the planning process outlined in the NRCS National Planning Procedures Handbook (NPPH). The NPPH is available at: *http://directives.sc.egov.usda.gov/*.

Conservation practice means one or more conservation improvements and planning activities, including structural practices, land management practices, vegetative practices, forest management practices, and other improvements that are planned and applied according to standards and specifications contained in the NRCS Field Office Technical Guide (FOTG). Conservation practices funded through CCPI are subject to requirements of each of the authorized programs:

- EQIP regulation 7 CFR part 1466—*http://www.nrcs.usda.gov/programs/eqip*.
- WHIP regulation 7 CFR part 636—*http://www.nrcs.usda.gov/programs/whip/*.

Contract as defined in the EQIP regulation means a legal document that specifies the rights and obligations of any participant accepted to participate in EQIP. A program contract is a binding agreement for the transfer of assistance from USDA to the participant to share in the costs of applying conservation practices.

Contribution Agreement is an agreement between two or more parties that reflects a relationship between the parties to serve a mutual interest and contribute equal resources in carrying out the programs administered by NRCS. Financial or other resources are

transferred or exchanged between the parties.

Cost-share agreement as defined in the WHIP regulation means a legal document that specifies the rights and obligations of any participant accepted into WHIP. A WHIP cost-share agreement is a binding agreement for the transfer of assistance from the Department of Agriculture (USDA) to the participant to share in the costs of applying conservation.

Cropland means land used primarily for the production of adapted crops for harvest, including but not limited to land in row crops or close-grown crops, forage crops that are in a rotation with row or close-grown crops, permanent hayland, horticultural crops, orchards, vineyards, cropped woodland, marshes, cranberry bogs, and other lands used for crop production.

Designated Conservationist means an NRCS employee whom the State Conservationist has designated as responsible for administration of NRCS programs at the local level.

Environmental Quality Incentives Program means a program administered by NRCS in accordance with 7 CFR part 1466, which provides for the installation and implementation of conservation practices on agricultural and nonindustrial private forest land.

Field Office Technical Guide means the official local NRCS source of resource information, conservation practice standards, specifications, and interpretation of guidelines, criteria, and requirements for planning and applying conservation practices and conservation management systems. It contains natural resource quality criteria to be achieved to provide for the conservation and sustainability of soil, water, air, plant, and animal resources applicable to the geographic area where resource concerns are addressed. The FOTG can be accessed online at: *http://www.nrcs.usda.gov/technical/efotg/.*

Financial Assistance means a payment made to the program participant.

Hayland means a subcategory of cropland managed for the production of forage crops that are machine harvested. The crop may be grasses, legumes, or a combination of both.

Indian Tribe means any Indian Tribe, band, nation, or other organized group or community, including any Alaska Native village or regional or village corporation as defined in or established pursuant to the Alaska Native Claims Settlement Act (43 U.S.C. 1601 *et seq.*) that is Federally recognized as eligible for the special programs and services provided by the United States to Indians because of their status as Indians.

Joint Agreement means a business arrangement where two or more participants cooperate to carry out conservation practices that can best be accomplished by combing resources. Such agreements must be formally documented and signed by all applicable parties.

Joint Operation means a general partnership, joint venture, or other similar business arrangement in which the members are jointly and severally liable for the obligations of the organization.

Limited Resource Farmer or Rancher means:

(a) A person with direct or indirect gross farm sales of not more than $155,200 in each of the previous 2 years (adjusted for inflation using Prices Paid by Farmer Index as compiled by the National Agricultural Statistical Service).

(b) Has a total household income at or below the national poverty level for a family of four, or less than 50 percent of county median household income in each of the previous 2 years (to be determined annually using Department of Commerce data).

Local working group means the advisory body pursuant to 16 U.S.C. 3861 and described in 7 CFR part 610. Information regarding these groups can be found at: *http://www.nrcs.usda.gov/programs/StateTech/.*

Natural Resources Conservation Service means an agency of USDA which has responsibility for administering programs such as EQIP and WHIP using the funds, facilities, and authorities of the CCC.

Nongovernmental organization is any legal entity that is organized for, and at all times since, the formation of the organization has been operated principally for one or more of the conservation purposes specified in clause (i), (ii), (iii), or (iv) of section 170(h)(4)(A) of the Internal Revenue Code of 1986; is an organization described in section 501(c)(3) or that is described in section 509(a)(2) of that Code; or is described in section 509(a)(3) of that Code and is controlled by an organization described in section 509(a)(2) of that Code.

Nonindustrial private forest land means rural land, as determined by the Secretary, that has existing tree cover or is suitable for growing trees and is owned by any nonindustrial private individual, group, association, corporation, Indian Tribe, or other private legal entity that has definitive decisionmaking authority over the land.

Participant means a person or legal entity, joint operation, or Tribe that is receiving payment or is responsible for implementing the terms and conditions of an EQIP or WHIP contract.

Partner means an entity that enters into a partnership agreement with NRCS to carry out CCPI the approved activities. Eligible partners include Federally recognized Indian Tribes, State and local units of government, producer associations, farmer cooperatives, and institutions of higher education or nongovernmental organizations with a history of working cooperatively with producers.

Partnership agreement means a multi-year agreement between NRCS and the partner. The CCPI partnership agreement does not transfer financial or technical assistance funding to a partner, nor provide for the administrative expenses of the partner. Individual producers may not enter into partnership agreements under CCPI authority.

Payment means financial assistance provided to a program participant under the terms of the contract or cost-share agreement. Payments and payment rates are guided by existing program rules.

Priority resource concern means a resource concern that is identified by the State Conservationist, with advice from the State Technical Committee and local work groups, as a priority for a State or the specific geographic areas within a State.

Producer means a person, legal entity, or joint operation who has an interest in the agricultural operation, according to 7 CFR part 1400, or who is engaged in agricultural production or forestry management.

Rangeland means land on which the historic climax plant community is predominantly grasses, grass-like plants, forbs, or shrubs, and includes lands revegetated naturally or artificially when routine management of that vegetation is accomplished mainly through manipulation of grazing. Rangelands include natural grasslands, savannas, shrublands, most deserts, tundra, alpine communities, coastal marshes, and wet meadows.

Resource concern means a specific natural resource problem that represents a significant concern in a State or region, and is likely to be addressed through the implementation of conservation practices by producers. Resource concerns used by NRCS are found in section III of each State or local FOTG which can be found at: *http://www.nrcs.usda.gov/technical/efotg/.* Examples of natural resource concerns include soil quality, water conservation, water quality, plant condition, air quality, domestic animals, fish and wildlife habitat, and other subcategories of resource concerns.

Socially Disadvantaged Farmer or Rancher means a farmer or rancher who has been subjected to racial or ethnic prejudices because of their identity as a member of a group without regard to their individual qualities. Those groups include African Americans, American Indians or Alaskan natives, Hispanics, Asians, and native Hawaiians or other Pacific Islanders.

State Conservationist means the NRCS employee who is authorized to implement conservation programs administered by NRCS and who directs and supervises NRCS activities in a State, the Caribbean Area, or the Pacific Islands Area.

State Technical Committee means a committee established by the USDA Secretary in a State pursuant to 16 U.S.C. 3861 and described in 7 CFR part 610. Information regarding these committees can be found at: *http://www.nrcs.usda.gov/programs/StateTech/.*

Technical assistance means technical expertise, information, and tools necessary for the conservation of natural resources on land active in agricultural, forestry, or related uses. The term includes: (1) Technical services provided directly to farmers, ranchers, and other eligible entities, such as conservation planning, technical consultation, and assistance with design and implementation of conservation practices; and (2) technical infrastructure including activities, processes, tools, and agency functions needed to support delivery of technical services, such as technical standards, resource inventories, training, data, technology, monitoring, and effects analyses. Information regarding technical assistance can be found at: *http://www.nrcs.usda.gov/programs/cta/.*

Technical Service Provider means an individual, private-sector entity, or public agency certified by NRCS to provide technical services to program participants in lieu of or on behalf of NRCS. Information regarding TSP services can be found at: *http://techreg.usda.gov/.*

Wildlife Habitat Incentive Program means a program administered by NRCS in accordance with 7 CFR part 636, which provides for technical and financial assistance to protect, restore, develop, and enhance wildlife habitat.

CCPI

Section 2707 of the 2008 Act establishes the CCPI by amending section 1243 of the Food Security Act of 1985 (16 U.S.C. 3843). CCPI is a voluntary conservation initiative that enables the use of certain conservation programs, along with resources of eligible partners, to provide financial and technical assistance to owners and operators of agricultural and nonindustrial private forest lands to enhance conservation outcomes.

Depending upon the program available, the assistance provided enables participants to implement conservation practices and enhancements, including the development and adoption of innovative conservation practices and management approaches. The partner is not required to provide financial or technical resources toward the project; however, proposals that include or offer partner provided resources will be given higher priority consideration in the evaluation process. CCPI financial assistance is delivered directly to agricultural producers and landowners in approved project areas through program contracts or cost-share agreements. General information about CCPI can be found at: *http://www.nrcs.usda.gov/programs/ccpi/.*

During FY 2010, NRCS, through CBWI–CCPI, will deliver EQIP and WHIP assistance to producers to achieve high-priority conservation objectives in geographic areas defined by the partner. Where flexibility is needed to meet project objectives, the partner may request that program adjustments be allowed, provided such policy adjustments are within the scope of the applicable program's statutory and regulatory program authorities. An example of a program adjustment may be to expedite the applicable program ranking process in a situation where a partner has identified the producers approved to participate in the project. Other examples of program adjustments may include flexibility in payment rate, or using single area-wide plan of operations rather than individual plans of operations.

Submitting Proposals

Potential partners must submit a complete proposal to Gregory K. Johnson, Director, Financial Assistance Programs Division, with a copy to the appropriate State Conservationist addressing all questions and items listed in the "Proposal Requirements" section of this notice. The proposal must include sufficient detail to allow NRCS to understand the partner's priority resource concerns, objectives, and expected outcomes.

Incomplete proposals and those that do not meet the requirements set forth in this notice will not be considered, and notification of elimination will be mailed to the potential partner. State Conservationists will provide guidance to potential partners regarding resource concerns that may be addressed in the proposed project area, local working group and State Technical Committee natural resource priorities, approved conservation practices and activities, and other program requirements the potential partner should consider when developing a proposal. No agency form is provided; potential partners must provide a narrative proposal following the requirements set forth in this notice.

All CBWI–CCPI proposals submitted become the property of NRCS for use in the administration of the program, may be filed or disposed of by the agency, and will not be returned to the potential partner. Once proposals have been submitted for review and ranking, there will be no further opportunity to change or re-submit the proposal document.

Land Eligibility

The following land is eligible for enrollment in the CBWI–CCPI:

- Private agricultural and nonindustrial private forest land.
- Land meeting the covered programs (EQIP and WHIP) eligibility rules. Eligible land is defined for each program in regulation:
- EQIP: 7 CFR 1466.8(c).
- WHIP: 7 CFR 636.4(b).

Land eligibility for CBWI–CCPI projects also include the requirement that the land be located in the Chesapeake Bay Watershed which is defined by statute as the area including all tributaries, backwaters, and side channels, including their watersheds, draining into the Chesapeake Bay (16 U.S.C. 3839bb–4).

Producer Application and Program Contracts

Producers interested in participating in an approved CBWI–CCPI project may apply for assistance at their local USDA service center. The designated conservationist will help the producer determine which program (EQIP or WHIP) is appropriate based on the practices and activities the applicant seeks to install or perform to meet the approved partner's project objectives.

Producers seeking to participate in a CBWI–CCPI project must meet all program-specific eligibility requirements. The requirements that apply to the contract or cost-share agreement are determined by the program selected. For information on program payment limitations and benefits, or other program requirements that may apply to land and producers enrolled in EQIP and WHIP, consult the appropriate program regulation as stated in this notice. Additional information can be found at: *http://*

www.nrcs.usda.gov/programs/. An agricultural producer may elect to use a TSP for technical assistance associated with conservation planning or practice design and implementation.

Proposal Requirements

For consideration of a proposal, a potential partner must submit five copies of the written proposal and one electronic copy to the Director, Financial Assistance Programs Division. Projects may not exceed 5 years in length. The proposal must be in the following format and contain the information set forth below:

Proposal Format: Five copies of the proposal should be typewritten or printed on 8½″ x 11″ white paper. The text of the application should be in a font no smaller than 12-point, with one-inch margins. One additional copy of the proposal must be in electronic format such as Microsoft Word or PDF on one CD ROM. If submitting more than one project proposal, submit a separate complete document for each project. Consult the NRCS national CCPI Web site for an example of an acceptable CCPI proposal document at: *http://www.nrcs.usda.gov/programs/ccpi/.* The entire project proposal may not exceed 12 pages in length including summary, maps, reference materials, and related reports.

Proposal Summary

The basic format for the CBWI–CCPI proposal is a narrative written response to the questions and information requested in this notice. There are no forms required or associated with the proposal submission process; however, the proposal must include all of the following:

(1) *Proposal Cover and Summary:* The first two pages of the proposal must include:

(a) Project Title.

(b) Project director/manager name, telephone number, and e-mail address.

(c) Name of lead partner entity submitting proposal and other collaborating partners.

(d) Mailing address and telephone numbers for lead partner submitting proposal.

(e) Short general description/summary of project and description of resource issues to be addressed. Identify the specific natural resource concerns to be addressed.

(f) List the approved FOTG conservation practices, enhancements, and conservation activity plans that will be used to address those resource concerns.

(g) *Specify the geographic location:* State, county(s), congressional districts, and whether proposal is a multi-State proposal or within-State proposal. Include a general location map.

(h) Proposed project start and end dates (not to exceed a period of 5 years).

(i) Total amount of CBWI–CCPI financial assistance being requested for entire project.

(2) *Project Natural Resource Objectives and Actions:* The proposal must include the project objectives and the natural resource concerns that will be addressed. A complete list of NRCS approved natural resource concerns can be found on the CCPI Web site at: *http://www.nrcs.usda.gov/programs/ccpi/.*

(a) Identify and provide detail about the natural resource concern(s) to be addressed and how the proposal objectives will address those concerns. Objectives should be specific, measurable, achievable, results-oriented, and include a timeline for completion.

(b) For each objective, identify the actions to be completed to achieve the objective and to address the identified natural resource concern. Note which actions are to be addressed through this project using NRCS program assistance and which are being addressed through alternate non-Federal funding sources or other resources provided.

(3) *Detailed Proposal Criteria:* Potential partners must fully describe their project and demonstrate their history of working with agricultural producers to address resource issues. Information provided in the proposal must include:

(a) A description of the partner(s) history of working with agricultural producers to address the conservation objectives to be achieved.

(b) A detailed description of the geographic area covered by the proposal, conservation priorities in the area, conservation objectives to be achieved, lands to be treated, and the expected level of participation by producers.

(1) Include a detailed map showing the project area. Describe the location and size of the proposed project area. Are the size and scope of the project and the proposed practices to address resource concerns reasonable and achievable?

(2) Outline on the map the areas which need conservation treatment and identify the number of acres involved. What kinds of conservation practices or enhancements needed to treat priority resource concerns in each area? Are specific areas or conservation practices prioritized in the project area so they will best address specific resource concerns? Which priority areas need to be addressed first?

(c) A description of how the partner(s) will collaborate to achieve the objectives of the agreement and the roles, responsibilities, and capabilities of the partner(s). Proposals that include resources from other than the submitter of the proposal must include a letter or other documentation from the other partners confirming this commitment of resources. Proposals that demonstrate efforts to collaborate with other partners and producers are likely to provide increased environmental benefits, meet the objectives of CBWI–CCPI, and receive higher ranking consideration in the evaluation process.

(d) A description of the project duration, which cannot exceed 5 years in length, plan of action, and project implementation schedule that details when the potential partner anticipates completing the project and submitting a final report.

(e) A description of the resources (financial and technical assistance) requested from each of the available NRCS programs (EQIP, WHIP) and the non-Federal resources provided by the partner that will be leveraged by the Federal contribution. Partners need to clearly state, by project objective, how they intend to leverage Federal funds along with partner resources. The funding and time contribution by agricultural producers to implement agreed-to conservation practices in program contracts may not be considered any part of a match from the potential partner for purposes of CBWI–CCPI.

(f) A description of the plan for monitoring, evaluating, and reporting on progress made toward achieving the objectives of the agreement. Priority will be given to projects where the partner can provide resources or services, or conduct activities to monitor and evaluate effects of conservation practices and activities implemented through the project.

(g) Potential criteria to be used by NRCS to prioritize and rank agricultural producers' CBWI–CCPI applications in the project area. Potential partners should collaborate with NRCS in the State where the project is proposed to develop meaningful criteria that the agency can use to evaluate and rank producer applications. For approved projects, this joint effort will help NRCS select producer applications which will best accomplish the projects intended goals and address priority resource issues identified by the partner in the proposal. Additional information regarding the process NRCS uses to evaluate and rank individual producer

applications is found in each of the authorized programs regulations, and guidance and examples or acceptable ranking criteria may be obtained from the State office where the project will be located.

(h) An estimate of the percentage of producers, including nonindustrial private forest landowners, in the project area that may participate in the project along with an estimate of the total number of producers located in the project area. Producer participation is a requirement for delivery of CBWI–CCPI program benefits. How will the partner encourage participation to guarantee success of the project? Does the project include any beginning farmers or ranchers, socially disadvantaged farmers or ranchers, limited resource farmers or ranchers, and Indian Tribes? If so, how many are expected to participate? Are there groups of producers who may submit joint applications to address resource issues of common interest and need?

(i) A listing and description of the conservation practices, conservation activity plans, enhancements, and partner activities to be implemented during the project timeframe and the general sequence of implementation of the project. Also address technical assistance efforts that will be made by the partner and those that the partner requests NRCS implement using eligible approved conservation practices, enhancements, and project financial assistance funding. In this section, list all the NRCS conservation practices and enhancements the partner wishes NRCS to offer to producers through the CBWI–CCPI project. Information about approved NRCS practices can be found in the FOTG at: *http://www.nrcs.usda.gov/technical/efotg/* and descriptions of practices at: *http://www.nrcs.usda.gov/technical/standards/*. For each conservation practice, estimate the amount of practice extent (feet, acres, number, *etc.*) the partner expects producers to implement each fiscal year during the life of the project and the amount of financial assistance requested to support implementation of each practice through producer contracts. Indicate whether the project will address regulatory compliance and any other outcomes that partner expects to complete during the project period. Describe any activities that are innovative or include outcome-based performance measures implemented by the partner.

(j) A description of the financial assistance needed annually for producer contracts that will be used to implement the conservation practices and enhancements identified in previous sections. This section of the proposal should also include the total amount of financial assistance funds requested for each fiscal year of the project (for multi-State projects, provide the funds and acres by State as appropriate), to be made available for producer contracts and cost-share agreements.

(k) A description of any requested policy adjustments, by program, with an explanation of why the adjustment is needed in order to achieve the objectives of the project. If a partner is requesting specific program flexibilities that depend on detailed participant or project information, the proposal must provide the needed information. Partners should contact their State Conservationist, or designee, to determine the specific information that may be required (examples of policy adjustments that may be allowed under this authority can be found on the CCPI Web site at: *http://www.nrcs.usda.gov/programs/ccpi/*).

(l) A description of how the partner will provide for outreach to beginning farmers or ranchers, limited resource farmers or ranchers, socially disadvantaged farmers or ranchers, and Indian Tribes.

(m) A description of how the proposal's objectives may provide additional benefits to address renewable energy production, energy conservation, mitigating the effects of climate change, facilitating climate change adaptation, or fostering carbon sequestration, if applicable.

(4) *Review:* The State Conservationist will review and comment on eligible proposals to address:

(a) Potential duplication of efforts with other projects or existing programs.

(b) Adherence to, and consistency with, program regulation including requirements related to land and producer eligibility and use of approved NRCS resource concerns and conservation practices, enhancements, and other program requirements.

(c) Expected benefits for project implementation in their State(s).

(d) Other issues or concerns the State Conservationist is aware of that should be considered by the Chief.

(e) A general recommendation for support or denial of project approval.

Prior to submission of the proposal, potential partners are strongly encouraged to consult with the appropriate State Conservationist(s) during development to obtain guidance as to appropriate resource concerns to address needed conservation practices and other details of the project proposal.

Acknowledgement of Submission and Notifications

Partners whose proposals have been selected will receive a letter of official notification. Upon notification of selection, the partner should contact the State Conservationist listed in the letter to develop the required partnership agreement and other project implementation requirements. Potential partners should note that depending upon available funding and agency priorities, NRCS may offer a reduced amount of program financial assistance from what was requested in the proposal. Partner submissions of proposals not selected will be notified by official letter.

Withdrawal of Proposals

Partner proposals may be withdrawn by written notice to the Director, Financial Assistance Programs Division at any time prior to selection.

Ranking Considerations

The Chief or designee will evaluate the proposals using a competitive process.

Higher priority may be given to proposals that:

(a) Have a high percentage of producers actively farming or managing working agricultural or nonindustrial private forest lands included in the proposed project area;

(b) Are in the watersheds of the Susquehanna, Shenandoah, Potomac (North and South), and Patuxent Rivers;

(c) Control erosion and reduce sediment and nutrient levels in ground and surface waters in designated priority areas;

(d) Significantly leverage non-Federal financial and technical resources and coordinate with other local, State, or Federal efforts;

(e) Deliver high percentages of applied conservation practices to address water quality, water conservation, or State and regional conservation initiatives;

(f) Provide innovation in approved conservation practices, conservation methods, and delivery, including outcome-based performance measures and methods;

(g) Complete the application of the conservation practices or activities on all of the covered program contracts or cost-share agreements in 5 years or less;

(h) Assist the participants in meeting local, State, and Federal regulatory requirements;

(i) Provide for monitoring and evaluation of conservation practices, enhancements, and activities;

(j) Provide for matching financial or technical assistance funds to assist

participants with the implementation of their EQIP contracts and WHIP cost-share agreements;

(k) Further the Nation's efforts with renewable energy production, energy conservation, mitigating the effects of climate change, facilitating climate change adaptation, or fostering carbon sequestration; and

(l) Provide for outreach to, and participation of, beginning farmers or ranchers, socially disadvantaged farmers or ranchers, limited resource farmers or ranchers, and Indian Tribes within the proposed project area.

Partnership Agreements

Upon selection and approval by the Chief, the agency and partner will enter a partnership agreement. The partnership agreement will not obligate funds, but will address:

(a) The role of the partner;

(b) The role of NRCS;

(c) The responsibilities of the partner related to the monitoring and evaluation of project performance;

(d) The frequency and duration of the monitoring and evaluation to be completed by the partner;

(e) The format and frequency of reports (semi-annual, annual, and final) required as a condition of the partnership agreement;

(f) Budget which includes other funding sources (if applicable) for financial and technical assistance;

(g) The specified project schedule and timeframe; and

(h) Other requirements deemed necessary by NRCS to achieve the purposes of the project.

Once a proposal is selected, a partnership agreement is signed, and subject to the availability of funding, NRCS begins entering into EQIP contracts or WHIP cost-share agreements directly with eligible producers including nonindustrial private forest landowners who are participating in the project and located in the approved geographic area. The program used will depend upon the type of conservation practices to be applied. Participants may have multiple contracts through CBWI–CCPI if more than one covered program is needed to accomplish the project objectives.

Waiver Authority

To assist in the implementation of CBWI–CCPI projects through EQIP or WHIP, the Chief may waive the applicability of the Adjusted Gross Income Limitation, on a case-by-case basis, in accordance with 7 CFR part 1400. Such waiver requests must be submitted in writing from the program applicant, addressed to the Chief, and submitted through the local NRCS designated conservationist.

Signed this 1st day of April 2010 in Washington, DC.

Dave White,

Vice President, Commodity Credit Corporation and Chief, Natural Resources Conservation Service.

Attachment

Addresses and Phone Number of NRCS State Conservationists in States Having Land in the Chesapeake Bay Watershed

Delaware: Russell Morgan,
Suite 100, 1221 College Park Drive,
Dover, DE 19904–8713.
Phone: (302) 678–4160.
Fax: (302) 678–0843.
russell.morgan@de.usda.gov.

Maryland: Jon Hall,
John Hanson Business Center, Suite 301,
339 Busch's Frontage Road,
Annapolis, MD 21409–5543.
Phone: (410) 757–0861 Ext. 315.
Fax: (410) 757–6504.
jon.hall@md.usda.gov.

New York: Astor Boozer,
Suite 354, 441 South Salina Street,
Syracuse, NY 13202–2450.
Phone: (315) 477–6504.
Fax: (315) 477–6560.
astor.boozer@ny.usda.gov.

Pennsylvania: Dave Brown, Acting,
Suite 340, One Credit Union Place,
Harrisburg, PA 17110–2993.
Phone: (717) 237–2203.
Fax: (717) 237–2238.
david.brown@pa.usda.gov.

Virginia: Jack Bricker,
Culpeper Building, Suite 209,
1606 Santa Rosa Road,
Richmond, VA 23229–5014.
Phone: (804) 287–1691.
Fax: (804) 287–1737.
jack.bricker@va.usda.gov.

West Virginia: Kevin Wickey,
Room 301, 75 High Street,
Morgantown, WV 26505.
Phone: (304) 284–7540.
Fax: (304) 284–4839.
kevin.wickey@wv.usda.gov.

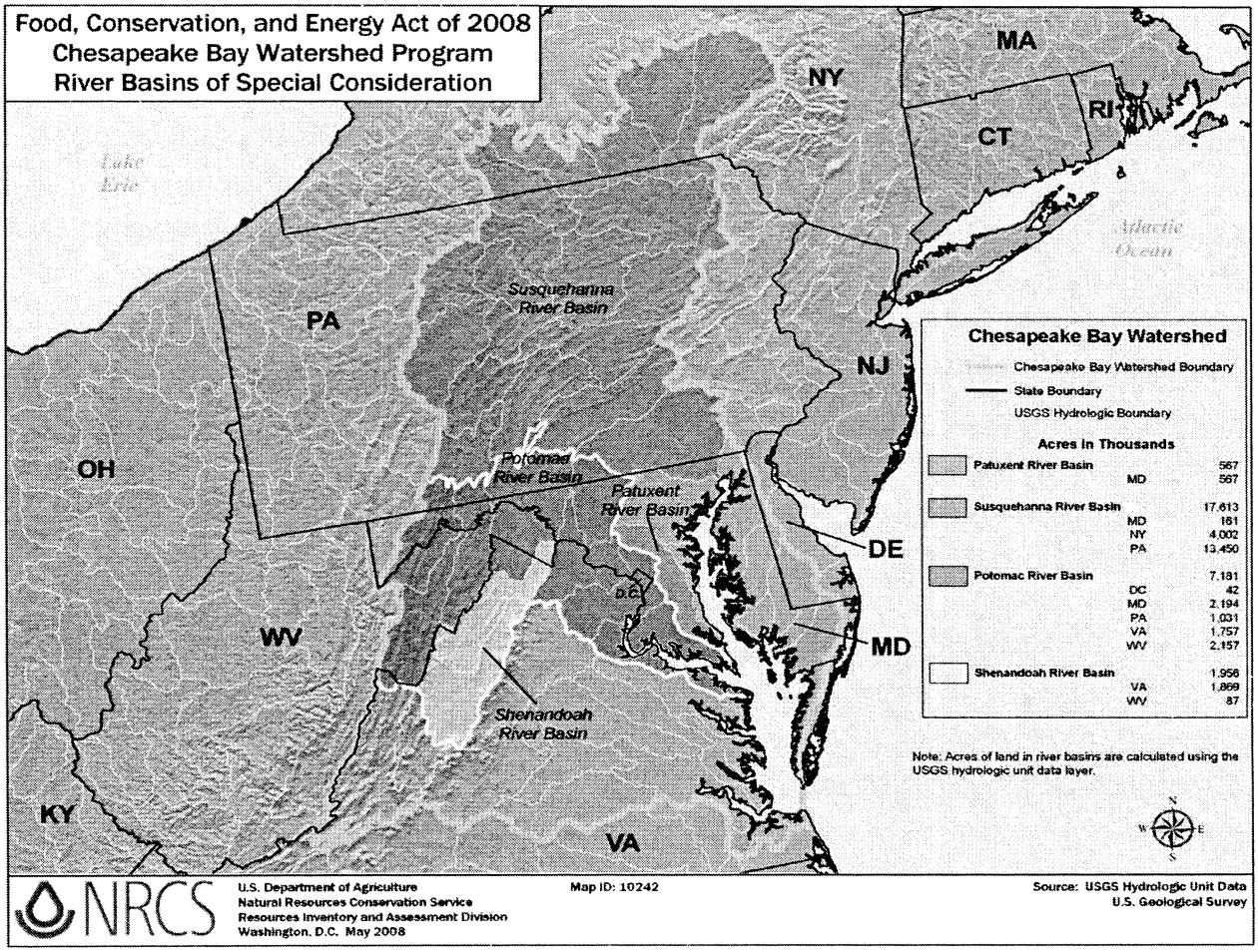

[FR Doc. 2010–7808 Filed 4–6–10; 8:45 am]

BILLING CODE 3410–16–P

DEPARTMENT OF COMMERCE

International Trade Administration

[A–201–822]

Stainless Steel Sheet and Strip in Coils from Mexico; Extension of Time Limit for Preliminary Results of Antidumping Duty Administrative Review

AGENCY: Import Administration, International Trade Administration, Department of Commerce

SUMMARY: As the Department of Commerce (the Department) requires additional information from the respondent, ThyssenKrupp Mexinox S.A. de C.V. and Mexinox USA, Inc. (collectively, Mexinox) in order to complete our analysis, the Department finds that it is not practicable to complete the preliminary results of this review within the original time frame. Accordingly, the Department is extending the time limit for completion of the preliminary results of this administrative review until no later than August 2, 2010.[1]

EFFECTIVE DATE: July 1, 2010

FOR FURTHER INFORMATION CONTACT: Patrick Edwards, Brian Davis, or Angelica Mendoza, AD/CVD Operations, Office 7, Import Administration, International Trade Administration, U.S. Department of Commerce, 14th Street and Constitution Avenue NW, Washington, DC 20230; telephone: (202) 482–8029, (202) 482–7924, or (202) 482–3019, respectively.

SUPPLEMENTARY INFORMATION:

Background

On July 31, 2009, the Department received a timely request from both Mexinox and Allegheny Ludlum Corporation, AK Steel Corporation, and North American Stainless (collectively, petitioners), to conduct an administrative review of the antidumping duty order on certain stainless steel sheet and strip in coils (S4 in coils) from Mexico. On August 25, 2009, the Department published a notice of initiation of this administrative review, covering the period of July 1, 2008, to June 30, 2009. *See Initiation of Antidumping and Countervailing Duty Administrative Reviews*, 74 FR 42875 (August 25, 2009). The current deadline for the preliminary results of this review is April 9, 2010.

Extension of Time Limits for Preliminary Results

Section 751(a)(3)(A) of the Tariff Act of 1930, as amended (the Act), requires that the Department complete the preliminary results of an administrative review within 245 days after the last day of the anniversary month of an order for which a review is requested. However, if it is not practicable to complete the review within this time period, section 751(a)(3)(A) of the Act allows the Department to extend the time limit for the preliminary results to a maximum of 365 days after the last day of the anniversary month of an order for which a review is requested.

The Department finds that it is not practicable to complete the preliminary results of this review within the original

[1] July 31, 2010, which is 365 days from the last day of the anniversary month of this order, falls on a Saturday. Therefore, the deadline for the preliminary results will be the following business day, Monday, August 2, 2010.

time frame because additional information from the respondent, Mexinox, is necessary to complete our analysis. The Department will not have sufficient time to obtain and analyze the new information prior to the current deadline for the preliminary results. Accordingly, the Department is extending the time limit for completion of the preliminary results of this administrative review until no later than August 2, 2010. We intend to issue the final results no later than 120 days after publication of the preliminary results notice.

This extension is issued and published in accordance with sections 751(a)(3)(A) and 777(i) of the Act.

Dated: April 1, 2010.

John M. Andersen,

Deputy Assistant Secretary for Antidumping and Countervailing Duty Operations.

[FR Doc. 2010–7919 Filed 4–6–10; 8:45 am]

BILLING CODE 3510–DS–S

DEPARTMENT OF COMMERCE

Foreign-Trade Zones Board

[Docket 19–2010]

Foreign–Trade Zone 196 - Fort Worth, Texas, Application for Manufacturing Authority, ATC Logistics & Electronics (Cell Phone Kitting and Distribution), Fort Worth, Texas

An application has been submitted to the Foreign–Trade Zones Board (the Board) by ATC Logistics & Electronics (ATCLE), operator of Site 2, FTZ 196, Fort Worth, Texas, requesting manufacturing authority. The application was submitted pursuant to the provisions of the Foreign–Trade Zones Act, as amended (19 U.S.C. 81a–81u), and the regulations of the Board (15 CFR part 400). It was formally filed on March 29, 2010.

The ATCLE facility (152 employees, 186,000 square feet, 2 million unit capacity) is used for the kitting and distribution of cell phones. Components and materials sourced from abroad (representing 96% of the value of the finished product) include: cell phone batteries; cell phone chargers and adaptors; headphones; earphones; microphones; speaker sets; battery doors; cables; holsters; leather carrying cases and pouches; wrist straps; sealing gaskets; key pads; and decals (duty rate ranges from duty free to 8.0%).

Under FTZ procedures, ATCLE would be able to choose the duty rates during customs entry procedures that apply to cell phones (duty free) for the foreign inputs noted above for its shipments to the U.S. market. ATCLE could also realize logistical benefits through the use of weekly customs entry procedures. The request indicates that the savings from FTZ procedures would help improve the plant's international competitiveness.

In accordance with the Board's regulations, Maureen Hinman of the FTZ Staff is designated examiner to evaluate and analyze the facts and information presented in the application and case record and to report findings and recommendations to the Board.

Public comment is invited from interested parties. Submissions (original and 3 copies) shall be addressed to the Board's Executive Secretary at the address below. The closing period for their receipt is June 7, 2010. Rebuttal comments in response to material submitted during the foregoing period may be submitted during the subsequent 15-day period to June 21, 2010.

A copy of the application will be available for public inspection at the Office of the Executive Secretary, Foreign–Trade Zones Board, Room 2111, U.S. Department of Commerce, 1401 Constitution Avenue, NW, Washington, DC 20230–0002, and in the "Reading Room" section of the Board's website, which is accessible via www.trade.gov/ftz.

For further information, contact Maureen Hinman at maureen.hinman@trade.gov or (202) 482–0627.

Dated: March 30, 2010.

Andrew McGilvray.

Executive Secretary.

[FR Doc. 2010–7886 Filed 4–6–10; 8:45 am]

BILLING CODE 3510–DS–S

DEPARTMENT OF COMMERCE

Foreign-Trade Zones Board

[Docket T–2–2010]

Foreign–Trade Zone 196 - Fort Worth, Texas, Application for Temporary/Interim Manufacturing Authority, ATC Logistics & Electronics (Cell Phone Kitting and Distribution), Fort Worth, Texas

An application has been submitted to the Executive Secretary of the Foreign–Trade Zones Board (the Board) by ATC Logistics & Electronics, operator of Site 2, FTZ 196, Fort Worth, Texas, requesting temporary/interim manufacturing (T/IM) authority. The application was filed on March 29, 2010.

ATCLE has requested authority for the kitting and distribution of cell phones (HTSUS 8517.12, duty free) under T/IM procedures at its facility (152 employees, 186,000 square feet, 2 million unit capacity). Foreign components that would be used in production (representing 96% of the value of the finished product) include: cell phone batteries; cell phone chargers and adaptors; headphones; earphones; microphones; speaker sets; battery doors; cables; holsters; leather carrying cases and pouches; wrist straps; sealing gaskets; key pads; and decals (duty rate ranges from duty free to 8.0%). T/IM authority could be granted for a period of up to two years. ATCLE has also submitted a request for long–term FTZ manufacturing authority (see Docket 19–2010).

Under FTZ procedures, ATCLE would be able to choose the duty rates during customs entry procedures that apply to cell phones (duty free) for the foreign inputs noted above for its shipments to the U.S. market. ATCLE could also realize logistical benefits through the use of weekly customs entry procedures. The request indicates that the savings from FTZ procedures would help improve the plant's international competitiveness.

In accordance with the Board's regulations, Maureen Hinman of the FTZ Staff is designated examiner to evaluate and analyze the facts and information presented in the application and case record and to report findings and recommendations pursuant to Board Orders 1347 and 1480.

Public comment is invited from interested parties. Submissions (original and 3 copies) shall be addressed to the Board's Executive Secretary at the following address: Office of the Executive Secretary, Foreign–Trade Zones Board, U.S. Department of Commerce, Room 2111, 1401 Constitution Ave. NW, Washington, DC 20230. The closing period for their receipt is May 7, 2010.

ATCLE has also submitted a request for long–term FTZ manufacturing authority, which may include additional products and components. It should be noted that the request for permanent authority would be docketed separately and would be processed as a distinct proceeding. Any party wishing to submit comments for consideration regarding the request for permanent authority would need to submit such comments pursuant to the separate notice that would be published for that request.

A copy of the application will be available for public inspection at the Office of the Foreign–Trade Zones Board's Executive Secretary at the address listed above, and in the

"Reading Room" section of the Board's website, which is accessible via www.trade.gov/ftz. For further information, contact Maureen Hinman at maureen.hinman@trade.gov or (202) 482–0627.

Dated: March 30, 2010.

Andrew McGilvray,

Executive Secretary.

[FR Doc. 2010–7885 Filed 4–6–10; 8:45 am]

BILLING CODE 3510–DS–S

DEPARTMENT OF COMMERCE

Foreign-Trade Zones Board

[Docket 24–2010]

Foreign–Trade Zone 75 -- Phoenix, Arizona, Application for Reorganization under Alternative Site Framework

An application has been submitted to the Foreign–Trade Zones (FTZ) Board (the Board) by the City of the Phoenix, grantee of FTZ 75, requesting authority to reorganize the zone under the alternative site framework (ASF) adopted by the Board (74 FR 1170, 1/12/09; correction 74 FR 3987, 1/22/09). The ASF is an option for grantees for the establishment or reorganization of general–purpose zones and can permit significantly greater flexibility in the designation of new "usage–driven" FTZ sites for operators/users located within a grantee's "service area" in the context of the Board's standard 2,000–acre activation limit for a general–purpose zone project. The application was submitted pursuant to the Foreign–Trade Zones Act, as amended (19 U.S.C. 81a–81u), and the regulations of the Board (15 CFR part 400). It was formally filed on March 31, 2010.

FTZ 75 was approved by the Board on March 25, 1982 (Board Order 185, 47 FR 14931, 04/07/82), and was expanded on July 2, 1993 (Board Order 647, 58 FR 37907, 07/14/93), on February 27, 2008 (Board Order 1545, 73 FR 13531, 03/13/08), and on March 23, 2010 (Board Order 1672).

The current zone project includes the following sites: *Site 1* (338 acres) - within the 550–acre Phoenix Sky Harbor Center and adjacent air cargo terminal at the Phoenix Sky Harbor International Airport, Phoenix; *Site 2* (18 acres) CC&F South Valley Industrial Center, 7th Street and Victory Street, Phoenix; *Site 3* (74 acres) - Riverside Industrial Center, 4747 West Buckeye Road, Phoenix; *Site 4* (18 acres) - Santa Fe Business Park, 47th Avenue and Campbell Avenue, Phoenix; and, *Site 5* (32.5 acres) - the jet fuel storage and distribution system at and adjacent to the Phoenix Sky Harbor International Airport, Phoenix.

The grantee's proposed service area under the ASF would be Maricopa County and portions of Pinal and Yavapai Counties, Arizona, as described in the application. If approved, the grantee would be able to serve sites throughout the service area based on companies' needs for FTZ designation. The proposed service area is within and adjacent to the Phoenix Customs and Border Protection port of entry.

The applicant is requesting authority to reorganize its existing zone project to include all of the existing sites as "magnet" sites. The ASF allows for the possible exemption of one magnet site from the "sunset" time limits that generally apply to sites under the ASF, and the applicant proposes that Site 1 be so exempted. No usage–driven sites are being requested at this time. Because the ASF only pertains to establishing or reorganizing a general–purpose zone, the application would have no impact on FTZ 75's authorized subzones.

In accordance with the Board's regulations, Christopher Kemp of the FTZ Staff is designated examiner to evaluate and analyze the facts and information presented in the application and case record and to report findings and recommendations to the Board.

Public comment is invited from interested parties. Submissions (original and 3 copies) shall be addressed to the Board's Executive Secretary at the address below. The closing period for their receipt is June 7, 2010. Rebuttal comments in response to material submitted during the foregoing period may be submitted during the subsequent 15-day period to June 21, 2010.

A copy of the application will be available for public inspection at the Office of the Executive Secretary, Foreign–Trade Zones Board, Room 2111, U.S. Department of Commerce, 1401 Constitution Avenue NW, Washington, DC 20230–0002, and in the "Reading Room" section of the Board's website, which is accessible via www.trade.gov/ftz. For further information, contact Christopher Kemp at Christopher.Kemp@trade.gov or (202) 482–0862.

Dated: March 31, 2010.

Andrew McGilvray,

Executive Secretary.

[FR Doc. 2010–7884 Filed 4–6–10; 8:45 am]

BILLING CODE 3510–DS–P

DEPARTMENT OF COMMERCE

Foreign-Trade Zones Board

[Docket 51–2008]

Foreign-Trade Zone 82; Application for Subzone Authority; ThyssenKrupp Steel and Stainless USA, LLC; Invitation for Public Comment on Preliminary Recommendation

The FTZ Board is inviting public comment on its staff's preliminary recommendation pertaining to the application by the City of Mobile, grantee of FTZ 82, to establish a subzone at the ThyssenKrupp Steel and Stainless USA, LLC (ThyssenKrupp) facility in Calvert, Alabama. The staff's preliminary recommendation is for approval of the application with a restriction limiting the FTZ benefits to ThyssenKrupp's production for export. The bases for this finding are as follows:

Analysis of the application record indicates that full approval of the ThyssenKrupp application could have a negative impact on domestic raw material suppliers as well as other domestic steel producers. Regarding raw material suppliers, while there may not be sufficient quantities available from domestic sources for all raw materials proposed in the application, significant U.S. production remains of several key materials. Unrestricted use of FTZ procedures in the steel industry could harm certain domestic raw material producers if cost savings are provided for imported materials used in ThyssenKrupp's production for the U.S. market.

As to impact on other domestic steel producers, while ordinarily all companies in an industry would have an equal opportunity to use FTZ procedures for their operations, the structure of many existing U.S. steel plants could make those companies' use of FTZ procedures overly complicated and costly. Unlike the ThyssenKrupp plant, many existing facilities are "mini-mills" and have less integration at a single site. Product may move between several facilities during the manufacturing process. This structure would require FTZ applications, CBP activations, and bonds to be done separately for each facility, whereas ThyssenKrupp will only face those burdens (and costs) once due to the nature of its Alabama facility.

In addition, ThyssenKrupp will be sourcing the "slab" for its carbon steel operations from Brazil, and will be shipping some stainless steel production to Mexico for certain cold-rolling operations. Other domestic producers conduct such operations in

the United States, creating higher levels of U.S. activity and employment. As a result, in combination with the other factors cited above, unrestricted FTZ authority for ThyssenKrupp could provide cost savings that would not be equally available to other domestic producers that have higher overall U.S. value added.

At the same time, the ThyssenKrupp facility in Alabama will be competing with other ThyssenKrupp plants abroad for production destined for markets elsewhere in North and South America and beyond. FTZ savings for the Alabama facility's export production could enhance its competitiveness in the world market.

Public comment on the preliminary recommendation and the bases for the finding is invited through May 14, 2010. Rebuttal comments may be submitted during the subsequent 15-day period, until June 1, 2010. Submissions (original and one electronic copy) shall be addressed to the Board's Executive Secretary at: Foreign-Trade Zones Board, U.S. Department of Commerce, Room 2111, 1401 Constitution Ave., NW., Washington, DC 20230.

For further information, contact Elizabeth Whiteman at *Elizabeth.Whiteman@trade.gov* or (202) 482–0473.

Dated: March 30, 2010.

Andrew McGilvray,

Executive Secretary.

[FR Doc. 2010–7883 Filed 4–6–10; 8:45 am]

BILLING CODE P

DEPARTMENT OF COMMERCE

International Trade Administration

[A–351–838, A–533–840, A–549–822]

Certain Frozen Warmwater Shrimp from Brazil, India, and Thailand: Notice of Initiation of Antidumping Duty Administrative Reviews

AGENCY: Import Administration, International Trade Administration, Department of Commerce.

SUMMARY: The Department of Commerce (Department) received timely requests to conduct administrative reviews of the antidumping duty orders on certain frozen warmwater shrimp (shrimp) from Brazil, India and Thailand. The anniversary month of these orders is February. In accordance with 19 CFR 351.221, we are initiating these administrative reviews.

DATES: *Effective Date:* April 7, 2010.

FOR FURTHER INFORMATION CONTACT: Rebecca Trainor at (202) 482–4007 (Brazil), Elizabeth Eastwood at (202) 482–3874 (India), and Kate Johnson at (202) 482–4929 (Thailand), AD/CVD Operations, Office 2, Import Administration, International Trade Administration, U.S. Department of Commerce, 14th Street and Constitution Avenue, NW., Washington, DC 20230.

Background

The Department received timely requests from the Ad Hoc Shrimp Trade Action Committee (hereinafter, Domestic Producers), the American Shrimp Processors Association (ASPA), and the Louisiana Shrimp Association (LSA), and certain individual companies, in accordance with 19 CFR 351.213(b), during the anniversary month of February 2010, for administrative reviews of the antidumping duty orders on shrimp from Brazil, India, and Thailand. The Department is now initiating administrative reviews of these orders covering multiple companies for Brazil, India, and Thailand, as noted in the "Initiation of Reviews" section of this notice.

In accordance with the Department's statement in its notice of opportunity to request administrative reviews, we have not initiated administrative reviews with respect to those companies which the Department was unable to locate in prior segments and for which no new information as to the party's location was provided by the requestor (*see Antidumping or Countervailing Duty Order, Finding, or Suspended Investigation; Opportunity To Request Administrative Review,* 75 FR 5037 (February 1, 2010)). We have also not initiated administrative reviews with respect to those companies we previously determined to be duplicates or no longer exist.

Finally, we have not initiated an administrative review with respect to the following companies requested by the Domestic Producers, the ASPA, and the LSA, because these companies were revoked from the antidumping duty order on certain frozen warmwater shrimp from Thailand as a result of the partial revocation of the order, effective January 16, 2009: Andaman Seafood Co., Ltd., Wales & Co. Universe Limited, Chanthaburi Frozen Food Co., Ltd., Chanthaburi Seafoods Co., Ltd., Intersia Foods Co., Ltd. (formerly Y2K Frozen Foods Co., Ltd.), Phatthana Seafood Co., Ltd., Phatthana Frozen Food Co., Ltd., Thailand Fishery Cold Storage Public Co., Ltd., Thai International Seafood Co., Ltd., S.C.C. Frozen Seafood Co., Ltd., and Sea Wealth Frozen Food Co., Ltd. (collectively, the Rubicon Group); and, Thai I-Mei Frozen Foods Co., Ltd. *See Implementation of the Findings of the WTO Panel in United States—Antidumping Measure on Shrimp from Thailand: Notice of Determination Under Section 129 of the Uruguay Round Agreements Act and Partial Revocation of the Antidumping Duty Order on Frozen Warmwater Shrimp from Thailand,* 74 FR 5638, 5639 (January 30, 2009); and, *Certain Frozen Warmwater Shrimp from Thailand: Final Results of Antidumping Duty Changed Circumstances Review and Notice of Revocation in Part,* 74 FR 52452 (October 13, 2009).

Initiation of Reviews

In accordance with section 751(a)(1) of the Tariff Act of 1930, as amended (the Act), we are initiating administrative reviews of the antidumping duty orders on shrimp from Brazil, India and Thailand. We intend to issue the final results of these reviews by February 28, 2011.

Antidumping duty proceeding	Period to be reviewed
BRAZIL Certain Frozen Warmwater Shrimp, A–351–838	2/1/09–1/31/10
Amazonas Industria Alimenticias SA.	
Natal Pesca Ltda..	
Railson Pesca e Exportacao Ltd..	
Tenda Atacada Ltda..	
INDIA Certain Frozen Warmwater Shrimp, A–533–840	2/1/09–1/31/10
Abad Fisheries.	
Accelerated Freeze-Drying Co..	
Adani Exports Ltd.	
Adilakshmi Enterprises.	
Allana Frozen Foods Pvt. Ltd..	
Allansons Ltd..	

Antidumping duty proceeding	Period to be reviewed
AMI Enterprises.	
Amulya Sea Foods.	
Ananda Aqua Applications/Ananda Aqua Exports (P) Limited/Ananda Foods [3].	
Anand Aqua Exports.	
Andaman Seafoods Pvt. Ltd..	
Angelique Intl.	
Anjaneya Seafoods.	
Anjani Marine Traders.	
Apex Exports [4].	
Asvini Exports.	
Asvini Feeds Limited.	
Asvini Fisheries Private Limited [8].	
Avanti Feeds Limited.	
Ayshwarya Seafood Private Limited.	
Baby Marine Exports.	
Baby Marine International.	
Baby Marine Sarass.	
Bhatsons Aquatic Products.	
Bhavani Seafoods.	
Bhisti Exports.	
Bijaya Marine Products.	
Blue Water Foods & Exports P. Ltd..	
Bluefin Enterprises.	
Bluepark Seafoods Pvt. Ltd..	
BMR Exports.	
Britto Exports.	
C P Aquaculture (India) Ltd..	
Calcutta Seafoods Pvt. Ltd.[4].	
Capithan Exporting Co..	
Castlerock Fisheries Ltd..	
Chemmeens (Regd).	
Cherukattu Industries (Marine Div.).	
Choice Canning Company.	
Choice Trading Corporation Private Limited [4].	
Coastal Corporation Ltd..	
Cochin Frozen Food Exports Pvt. Ltd..	
Coreline Exports.	
Corlim Marine Exports Pvt. Ltd..	
Damco India Private.	
Devi Fisheries Limited.	
Devi Marine Food Exports Private Ltd./Kader Exports Private Limited/Kader Investment and Trading Company Private Limited/Liberty Frozen Foods Pvt. Ltd./Liberty Oil Mills Ltd./Premier Marine Products/Universal Cold Storage Private Limited [4, 5].	
Devi Sea Foods Limited [4].	
Dhanamjaya Impex P. Ltd..	
Diamond Seafood Exports/Edhayam Frozen Foods Pvt. Ltd./Kadalkanny Frozen Foods/Theva & Company [4, 6].	
Digha Seafood Exports.	
Esmario Export Enterprises.	
Exporter Coreline Exports.	
Falcon Marine Exports Limited/K.R. Enterprises[4, 7].	
Five Star Marine Exports Private Limited.	
Forstar Frozen Foods Pvt. Ltd..	
Frigerio Conserva Allana Limited.	
Frontline Exports Pvt. Ltd..	
G A Randerian Ltd..	
G.K S Business Associates Pvt. Ltd..	
Gadre Marine Exports.	
Galaxy Maritech Exports P. Ltd..	
Gayatri Sea Foods and Feeds Private Ltd..	
Gayatri Seafoods.	
Geo Aquatic Products (P) Ltd..	
Geo Seafoods.	
Grandtrust Overseas (P) Ltd..	
GVR Exports Pvt. Ltd..	
Haripriya Marine Export Pvt. Ltd.[4].	
Harmony Spices Pvt. Ltd..	
HIC ABF Special Foods Pvt. Ltd..	
Hindustan Lever, Ltd..	
Hiravata Ice & Cold Storage.	
Hiravati Exports Pvt. Ltd..	
Hiravati International Pvt. Ltd. (located at APM—Mafco Yard, Sector—18, Vashi, Navi, Mumbai—400 705, India).	
Hiravati International Pvt. Ltd. (located at Jawar Naka, Porbandar, Gujarat, 360 575, India).	
IFB Agro Industries Ltd.[4].	

Antidumping duty proceeding	Period to be reviewed
Indian Aquatic Products.	
Indo Aquatics.	
Innovative Foods Limited.	
International Freezefish Exports.	
Interseas.	
ITC Limited, International Business.	
ITC Ltd..	
Jagadeesh Marine Exports.	
Jaya Satya Marine Exports.	
Jaya Satya Marine Exports Pvt. Ltd..	
Jayalakshmi Sea Foods Private Limited [4].	
Jinny Marine Traders.	
Jiya Packagings.	
KNR Marine Exports.	
K R M Marine Exports Ltd..	
K V Marine Exports [4].	
Kalyan Aqua & Marine Exp. India Pvt. Ltd..	
Kalyanee Marine.	
Kay Kay Exports.	
Kings Marine Products [4].	
Koluthara Exports Ltd..	
Konark Aquatics & Exports Pvt. Ltd..	
L.G Seafoods.	
Landauer Ltd. C O Falcon Marine Exports Ltd..	
Lewis Natural Foods Ltd..	
Libran Cold Storages (P) Ltd..	
Lotus Sea Farms.	
Lourde Exports.	
Magnum Estates Limited [4].	
Magnum Export.	
Magnum Sea Foods Limited [4].	
Malabar Arabian Fisheries.	
Malnad Exports Pvt. Ltd..	
Mangala Marine Exim India Pvt. Ltd..	
Mangala Sea Products.	
Marine Exports.	
Meenaxi Fisheries Pvt. Ltd..	
MSC Marine Exporters.	
MSRDR Exports.	
MTR Foods.	
N.C. John & Sons (P) Ltd.	
Naga Hanuman Fish Packers.	
Naik Frozen Foods.	
Naik Seafoods Ltd..	
Navayuga Exports Ltd..	
Nekkanti Sea Foods Limited.	
NGR Aqua International.	
Nila Sea Foods Pvt. Ltd..	
Nine Up Frozen Foods.	
Overseas Marine Export.	
Penver Products (P) Ltd..	
Pijikay International Exports P Ltd..	
Pisces Seafood International.	
Premier Seafoods Exim (P) Ltd..	
R V R Marine Products Private Limited [4].	
Raa Systems Pvt. Ltd..	
Raju Exports.	
Ram's Assorted Cold Storage Ltd.[4].	
Raunaq Ice & Cold Storage.	
Raysons Aquatics Pvt. Ltd..	
Razban Seafoods Ltd..	
RBT Exports.	
RDR Exports.	
Riviera Exports Pvt. Ltd..	
Rohi Marine Private Ltd..	
Royal Cold Storage India P Ltd..	
S & S Seafoods.	
S. A. Exports.	
S Chanchala Combines.	
Safa Enterprises.	
Sagar Foods.	
Sagar Grandhi Exports Pvt. Ltd..	
Sagarvihar Fisheries Pvt. Ltd..	

Antidumping duty proceeding	Period to be reviewed
SAI Marine Exports Pvt. Ltd.[4].	
SAI Sea Foods[4].	
Sanchita Marine Products P Ltd.	
Sandhya Aqua Exports.	
Sandhya Aqua Exports Pvt. Ltd..	
Sandhya Marines Limited.	
Santhi Fisheries & Exports Ltd..	
Satya Seafoods Private Limited.	
Sawant Food Products.	
Seagold Overseas Pvt. Ltd..	
Selvam Exports Private Limited.	
Sharat Industries Ltd..	
Shimpo Exports.	
Shippers Exports.	
Shroff Processed Food & Cold Storage P Ltd..	
Silver Seafood.	
Sita Marine Exports.	
SLS Exports Pvt. Ltd..	
Sprint Exports Pvt. Ltd.[4].	
Sri Chandrakantha Marine Exports[4].	
Sri Sakkthi Cold Storage.	
Sri Sakthi Marine Products P Ltd..	
Sri Satya Marine Exports.	
Sri Venkata Padmavathi Marine Foods Pvt. Ltd..	
Srikanth International.	
Srikanth International Agri Exports & Imports.	
SSF Ltd..	
Star Agro Marine Exports.	
Star Agro Marine Exports Private Limited.	
Sterling Foods.	
Sun-Bio Technology Ltd..	
Supreme Exports.	
Surya Marine Exports.	
Suryamitra Exim (P) Ltd..	
Suvarna Rekha Exports Private Limited.	
Suvarna Rekha Marines P Ltd..	
TBR Exports Pvt Ltd..	
Teekay Marine P. Ltd.[4].	
Tejaswani Enterprises.	
The Waterbase Ltd..	
Triveni Fisheries P Ltd..	
Unitriveni Overseas.	
Usha Seafoods.	
V.S Exim Pvt Ltd..	
Vaibhav Sea Foods.	
Veejay Impex.	
Veeteejay Exim Pvt., Ltd..	
Victoria Marine & Agro Exports Ltd..	
Vijayalaxmi Seafoods.	
Vinner Marine.	
Vishal Exports.	
Wellcome Fisheries Limited.	
West Coast Frozen Foods Private Limited.	
THAILAND Certain Frozen Warmwater Shrimp, A–549–822	2/1/09–1/31/10
A. Wattanachai Frozen Products Co., Ltd..	
A.S. Intermarine Foods Co., Ltd..	
ACU Transport Co., Ltd..	
American Commercial Transport (Thailand).	
Ampai Frozen Food Co., Ltd..	
Apex Maritime (Thailand) Co., Ltd.[9].	
Apex Maritime Thailand[9].	
Asian Seafoods Coldstorage Public Co., Ltd./Asian Seafoods Coldstorage (Suratthani) Co./STC Foodpak Ltd..	
Assoc. Commercial Systems.	
B.S.A. Food Products Co., Ltd..	
Bangkok Dehydrated Marine Product Co., Ltd..	
Best Fruits.	
Bright Sea Co., Ltd..	
C.P. Merchandising Co., Ltd..	
C Y Frozen Food Co., Ltd..	
Calsonic Kansei (Thailand) Co., Ltd..	
Century Industries Co., Ltd..	
Chaivaree Marine Products Co., Ltd..	
Chaiwarut Co., Ltd..	

Antidumping duty proceeding	Period to be reviewed
Charoen Pokphand Foods Public Co., Ltd..	
Chue Eie Mong Eak.	
Conair Intertraffic Co., Ltd..	
Core Seafood Processing Co., Ltd..	
Crystal Frozen Foods Co., Ltd. and/or Crystal Seafood.	
Daedong (Thailand) Co. Ltd..	
Daiei Taigen (Thailand) Co., Ltd..	
Daiho (Thailand) Co., Ltd..	
Dextrans Worldwide (Thailand) Ltd..	
Dragon International Furniture Co., Ltd..	
Earth Food Manufacturing Co., Ltd..	
Enburg Food Thai Co., Ltd..	
Extra Maritime Co., Ltd..	
F.A.I.T. Corporation Limited.	
Far East Cold Storage Co., Ltd..	
Findus (Thailand) Ltd..	
Fortune Frozen Foods (Thailand) Co., Ltd..	
Frozen Marine Products Co., Ltd..	
Fujitsu General (Thailand) Co., Ltd..	
Gallant Ocean (Thailand) Co., Ltd./Gallant Seafoods Corporation.	
Golden Sea Frozen Foods Co., Ltd..	
Good Fortune Cold Storage Co., Ltd..	
Good Luck Product Co., Ltd..	
Great Food (Dehydration) Co., Ltd..	
Grobest Frozen Foods Co., Ltd..	
Gulf Coast Crab Intl..	
H.A.M. International Co., Ltd..	
Heng Seafood Limited Partnership.	
Herba Bangkok S.L..	
Heritrade Co., Ltd..	
HIC (Thailand) Co., Ltd..	
I.T. Foods Industries Co., Ltd..	
Inter-Furnitech Co., Ltd..	
Inter-Oceanic Resources Co., Ltd..	
Inter-Pacific Marine Products Co., Ltd..	
Inter-Taste Foods Co., Ltd..	
K Fresh.	
K. D. Trading Co., Ltd..	
KF Foods.	
K.L. Cold Storage Co., Ltd..	
K & U Enterprise Co., Ltd..	
Kiang Huat Sea Gull Trading Frozen Food Public Co., Ltd..	
Kingfisher Holdings Ltd..	
Kibun Trdg.	
Klang Co., Ltd..	
Kitchens of the Ocean (Thailand) Ltd..	
Kongphop Frozen Foods Co., Ltd..	
Kosamut Frozen Foods Co., Ltd..	
Lee Heng Seafood Co., Ltd..	
Leo Transports.	
Maersk Line.	
Magnate & Syndicate Co., Ltd..	
Mahachai Food Processing Co., Ltd..	
Marine Gold Products Co., Ltd..	
May Ao Co., Ltd./May Ao Foods Co., Ltd..	
Meyer Industries Ltd..	
Namprik Maesri Ltd. Part..	
Narong Seafood Co., Ltd..	
National Starch and Chemical Thailand Ltd..	
Noble Marketing Co., Ltd..	
NR Instant Produce Co., Ltd..	
Oki Data Manufacturing (Thailand) Co., Ltd..	
Ongkorn Cold Storage Co., Ltd./Thai-Ger Marine Co., Ltd..	
Orion Electric Co., Ltd..	
Pacific Queen Co., Ltd..	
Pakfood Public Company Limited/Asia Pacific (Thailand) Co., Ltd./Chaophraya Cold Storage Co., Ltd./Okeanos Co. Ltd./Okeanos Food Co. Ltd./Takzin Samut Co., Ltd.[10].	
Penta Impex Co., Ltd..	
Pinwood Nineteen Ninety Nine.	
Pioneer Manufacturing (Thailand) Co., Ltd..	
Piti Seafoods Co., Ltd..	
Premier Frozen Products Co., Ltd..	
Preserved Food Specialty Co., Ltd..	

Antidumping duty proceeding	Period to be reviewed
Protainer International Co., Ltd..	
Queen Marine Food Co., Ltd..	
Rayong Coldstorage (1987) Co., Ltd..	
S&D Marine Products Co., Ltd..	
S&P Aquarium.	
S&P Syndicate Public Company Ltd..	
S. Chaivaree Cold Storage Co., Ltd..	
S. Khonkaen Food Industry Public Co., Ltd. and/or S. Khonkaen Food Ind Public.	
SMP Foods Products Co., Ltd..	
Samui Foods Company Limited.	
Sea Bonanza Food Co., Ltd..	
Seafoods Enterprise Co., Ltd..	
Seafresh Fisheries/Seafresh Industry Public Co., Ltd..	
Siam Food Supply Co., Ltd..	
Siam Intersea Co., Ltd..	
Siam Marine Products Co. Ltd..	
Siam Marine Frozen Foods Co., Ltd..	
Siam Ocean Frozen Foods Co. Ltd..	
Siam Union Frozen Foods.	
Siamchai International Food Co., Ltd..	
Smile Heart Foods Co. Ltd..	
Southport Seafood Company Limited.	
Suntechthai Intertrading Co., Ltd..	
Surapon Nichirei Foods Co., Ltd..	
Surapon Seafoods Public Co., Ltd./Surapon Foods Public Co., Ltd./Surat Seafoods Co., Ltd..	
Suratthani Marine Products Co., Ltd..	
Suree Interfoods Co., Ltd..	
T.H.I. Group (Bangkok) Co., Ltd..	
T.P. Food Canning Ltd., Part..	
T.S.F. Seafood Co., Ltd..	
Tanaya International Co., Ltd..	
Tanaya Intl..	
Teppitak Seafood Co., Ltd..	
Tey Seng Cold Storage Co., Ltd..	
Tep Kinsho Foods Co., Ltd..	
Thai Agri Foods Public Co., Ltd..	
Thai Frozen Foods Co., Ltd..	
Thai Lee Agriculture Co., Ltd..	
Thai Mahachai Seafood Products Co., Ltd..	
Thai Ocean Venture Co., Ltd..	
Thai Onono Public Co., Ltd..	
Thai Patana Frozen.	
Thai Prawn Culture Center Co., Ltd..	
Thai Royal Frozen Food Co. Ltd..	
Thai Spring Fish Co., Ltd..	
Thai Union Frozen Products Public Co., Ltd./Thai Union Seafood Co., Ltd.[11].	
Thai Union Manufacturing Co., Ltd. and/or Thai Union Mfg.	
Thai World Imp & Exp Co..	
Thai Yoo Ltd., Part..	
Thaveevong Industry Co., Ltd..	
The Siam Union Frozen Foods Co., Ltd..	
The Union Frozen Products Co., Ltd..	
Trang Seafood Products Public Co., Ltd..	
Transamut Food Co., Ltd..	
Tung Lieng Trdg.	
United Cold Storage Co., Ltd..	
V Thai Food Product.	
Wann Fisheries Co., Ltd..	
Xian-Ning Seafood Co., Ltd..	
Yeenin Frozen Foods Co., Ltd..	
YHS Singapore Pte.	
ZAFCO TRDG.	

[3] In the 2007–2008 administrative review, the Department found that the following companies comprised a single entity: Ananda Aqua Exports (P) Ltd., Ananda Foods, and Ananda Aqua Applications. *See Certain Frozen Warmwater Shrimp From India: Preliminary Results and Preliminary Partial Rescission of Antidumping Duty Administrative Review,* 74 FR 9991, 9994 (Mar. 9, 2009) (*2007–2008 Indian Shrimp Preliminary Results*). Absent information to the contrary, we intend to treat these companies as a single entity for purposes of this administrative review.

[4] The interested parties' requests for review included certain companies with similar names and/or addresses. For purposes of initiation, we have treated these companies as the same entity based on information obtained in the 2004–2006, 2006–2007, 2007–2008, or 2008–2009 administrative review. *See* the March 29, 2010, memorandum from Holly Phelps to the File entitled, "Placing Public Information from the 2004–2006, 2006–2007, 2007–2008, and 2008–2009 Antidumping Duty Administrative Reviews on the Record of the 2009–2010 Antidumping Duty Administrative Review on Certain Frozen Warmwater Shrimp from India."

[5] In the 2004–2006 administrative review, the Department found that the following companies comprised a single entity: Devi Marine Food Exports Private Limited, Kader Investment and Trading Company Private Limited, Kader Exports Private Limited, Liberty Frozen Foods Private Limited, Liberty Oil Mills Limited, Premier Marine Products, and Universal Cold Storage Private Limited. *See Certain Frozen Warmwater Shrimp from India: Final Results and Partial Rescission of Antidumping Duty Administrative Review,* 72 FR 52055, 52058 (Sept. 12, 2007). Absent information to the contrary, we intend to continue to treat these companies as a single entity for purposes of this administrative review.

[6] In the 2006–2007 administrative review, the Department found that the following companies comprised a single entity: Diamond Seafoods Exports, Edhayam Frozen Foods Pvt. Ltd., Kadalkanny Frozen Foods, and Theva & Company. *See Certain Frozen Warmwater Shrimp from India: Preliminary Results and Preliminary Partial Rescission of Antidumping Duty Administrative Review,* 73 FR 12103, 12106 (Mar. 6, 2008), unchanged in *Certain Frozen Warmwater Shrimp From India: Final Results and Partial Rescission of Antidumping Duty Administrative Review,* 73 FR 40492 (July 15, 2008) (*2006–2007 Indian Shrimp Final Results*). Absent information to the contrary, we intend to continue to treat these companies as a single entity for purposes of this administrative review.

[7] In the 2007–2008 administrative review, the Department found that the following companies comprised a single entity: Falcon Marine Exports Limited and K.R. Enterprises. *See 2007–2008 Indian Shrimp Preliminary Results,* 74 FR at 9994, unchanged in *Certain Frozen Warmwater Shrimp From India: Final Results and Partial Rescission of Antidumping Duty Administrative Review,* 74 FR 33409 (July 13, 2009). Absent information to the contrary, we intend to continue to treat these companies as a single entity for purposes of this administrative review.

[8] In the 2007–2008 administrative review, the Department found that Asvini Fisheries Private Limited is the successor-in-interest to Asvini Fisheries Limited. *See 2006–2007 Indian Shrimp Final Results,* 73 FR at 40493.

[9] The requests for review included certain companies with similar names but different addresses. For purposes of initiation, we have treated these companies as separate entities.

[10] In the 2007–2008 administrative review, the Department found that the following companies comprised a single entity: Pakfood Public Company Limited, Asia Pacific (Thailand) Co., Ltd., Chaophraya Cold Storage Co. Ltd., Okeanos Co. Ltd., Okeanos Food Co. Ltd., and Takzin Samut Co. Ltd. *See Certain Frozen Warmwater Shrimp from Thailand: Final Results and Partial Rescission of Antidumping Duty Administrative Review,* 74 FR 47551 (September 16, 2009), and accompanying Issues and Decision memorandum at Comment 6. Absent information to the contrary, we intend to continue to treat these companies as a single entity for purposes of this administrative review.

[11] In the 2006–2007 administrative review, the Department found that the following companies comprised a single entity: Thai Union Frozen Products Co., Ltd. and Thai Union Seafood Co., Ltd. *See Certain Frozen Warmwater Shrimp from Thailand: Preliminary Results and Preliminary Partial Rescission of Antidumping Duty Administrative Review,* 73 FR 12088 (Mar. 6, 2008), unchanged in *Certain Frozen Warmwater Shrimp from Thailand: Final Results and Final Partial Rescission of Antidumping Duty Administrative Review,* 73 FR 50933 (August 29, 2008). Absent information to the contrary, we intend to continue to treat these companies as a single entity for purposes of this administrative review.

Notice of No Sales

Under 19 CFR 351.213(d)(3), the Department may rescind a review where there are no exports, sales, or entries of subject merchandise during the period of review (POR). If a producer or exporter named in this notice of initiation had no exports, sales, or entries during the POR, it should notify the Department within 30 days of publication of this notice in the **Federal Register.** The Department will consider rescinding the review only if the producer or exporter, as appropriate, submits a properly filed and timely statement certifying that it had no exports, sales, or entries of merchandise during the POR. All submissions must be made in accordance with 19 CFR 351.303 and are subject to verification in accordance with section 782(i) of the Act. Six copies of the submission should be submitted to the Assistant Secretary for Import Administration, International Trade Administration, Room 1870, U.S. Department of Commerce, 14th Street and Constitution Avenue, NW., Washington, DC 20230. Further, in accordance with 19 CFR 351.303(f)(1)(i), a copy of each request must be served on every party on the Department's service list.

Respondent Selection

In the event the Department limits the number of respondents for individual examination for administrative reviews, the Department intends to select respondents based on U.S. Customs and Border Protection (CBP) data for U.S. imports during the POR. We intend to release the CBP data under Administrative Protective Order (APO) to all parties having an APO within five days of publication of this initiation notice and to make our decision regarding respondent selection within 20 days of publication of this **Federal Register** notice. The Department invites comments regarding the CBP data and respondent selection within 10 calendar days of publication of this **Federal Register** notice.

Interested parties must submit applications for disclosure under APO in accordance with 19 CFR 351.305. Instructions for filing such applications may be found on the Department's web site at *http://ia.ita.doc.gov/apo.*

This initiation and notice are in accordance with section 751(a)(1) of the Act and 19 CFR 351.221(c)(1)(i).

Dated: March 31, 2010.

John M. Andersen,

Acting Deputy Assistant Secretary for Antidumping and Countervailing Duty Operations.

[FR Doc. 2010–7917 Filed 4–6–10; 8:45 am]

BILLING CODE 3510–DS–P

DEPARTMENT OF COMMERCE

International Trade Administration

Quarterly Update to Annual Listing of Foreign Government Subsidies on Articles of Cheese Subject to an In–Quota Rate of Duty

AGENCY: Import Administration, International Trade Administration, Department of Commerce.

EFFECTIVE DATE: April 7, 2010.

FOR FURTHER INFORMATION CONTACT: Gayle Longest, AD/CVD Operations, Office 3, Import Administration, International Trade Administration, U.S. Department of Commerce, 14th Street and Constitution Ave., NW, Washington, DC 20230, telephone: (202) 482–3338.

SUPPLEMENTARY INFORMATION: Section 702 of the Trade Agreements Act of 1979 (as amended) ("the Act") requires the Department of Commerce ("the Department") to determine, in consultation with the Secretary of Agriculture, whether any foreign government is providing a subsidy with respect to any article of cheese subject to an in–quota rate of duty, as defined in section 701(c)(1) of the Act, and to publish an annual list and quarterly updates to the type and amount of those subsidies. We hereby provide the Department's quarterly update of subsidies on articles of cheese that were imported during the period October 1, 2009, through December 31, 2009.

The Department has developed, in consultation with the Secretary of Agriculture, information on subsidies (as defined in section 702(h)(2) of the Act and section 771(5) of the Tariff Act of 1930, as amended ("Tariff Act")), being provided either directly or indirectly by foreign governments on articles of cheese subject to an in–quota rate of duty.

The appendix to this notice lists the country, the subsidy program or programs, and the gross and net amounts of each subsidy for which information is currently available. The Department will incorporate additional programs which are found to constitute subsidies, and additional information on the subsidy programs listed, as the information is developed.

The Department encourages any person having information on foreign government subsidy programs which benefit articles of cheese subject to an in–quota rate of duty to submit such information in writing to the Assistant Secretary for Import Administration, U.S. Department of Commerce, 14th Street and Constitution Ave., NW, Washington, DC 20230.

This determination and notice are in accordance with section 702(a)(2) of the Act.

Dated: March 31, 2010.

Ronald K. Lorentzen,

Deputy Assistant Secretary for Import Administration.

APPENDIX

SUBSIDY PROGRAMS ON CHEESE SUBJECT TO AN IN–QUOTA RATE OF DUTY

Country	Program(s)	Gross[1] Subsidy ($/lb)	Net[2] Subsidy ($/lb)
27 European Union Member States[3]	European Union Restitution Payments	$ 0.00	$0.00
Canada	Export Assistance on Certain Types of Cheese	$ 0.35	$ 0.35
Norway	Indirect (Milk) Subsidy	$ 0.00	$ 0.00
	Consumer Subsidy	$ 0.00	$ 0.00
	Total	$ 0.00	$ 0.00
Switzerland	Deficiency Payments	$ 0.00	$ 0.00

[1] Defined in 19 U.S.C. 1677(5).
[2] Defined in 19 U.S.C. 1677(6).
[3] The 27 member states of the European Union are: Austria, Belgium, Belgium, Bulgaria, Cyprus, Czech Republic, Denmark, Estonia, Finland, France, Germany, Greece, Hungary, Ireland, Italy, Latvia, Lithuania, Luxembourg, Malta, Netherlands, Poland, Portugal, Romania, Slovakia, Slovenia, Spain, Sweden, and the United Kingdom.

[FR Doc. 2010–7906 Filed 4–6–10; 8:45 am]

BILLING CODE 3510–DS–S

DEPARTMENT OF ENERGY

Energy Efficient Building Systems Regional Innovation Cluster Initiative—Joint Federal Funding Opportunity Announcement Information Session II

AGENCY: Department of Energy (DOE).

ACTION: Notice of public webinar.

SUMMARY: This notice announces a second information session for potential applicants, partner organizations, and other interested parties to learn more about the Joint Federal Funding Opportunity Announcement (FOA) (*see http://www.energy.gov/hubs/eric.htm*) issued on February 8, 2010, titled the Energy Efficient Building Systems Regional Innovation Cluster Initiative. A single proposal submitted by a consortium of applicants will be funded at a total of up to $129.7 million over 5 years to foster a regional innovation cluster focused on innovation in energy efficient building technologies and systems design. The DOE-funded Energy Efficient Building Systems Design Hub (the "Hub") will serve as a centerpiece of the regional innovation cluster (the "Energy Regional Innovation Cluster" or "E–RIC") and will work to disseminate new technologies into the marketplace and share best practices with the public and private sectors. By linking researchers in the Hub with local businesses and supporting specialized workforce education and training in the area, the Consortium will foster an economically dynamic regional innovation cluster focused on energy efficient buildings technologies and systems design. The Hub, one of three Energy Innovation Hubs to be created by the DOE in Fiscal Year 2010, will bring together a multidisciplinary team of researchers ideally working under one roof to conduct high-risk, high-reward research that overcomes technology challenges through approaches that span basic research to engineering development to commercialization readiness. The Hub will work with key partners funded by EDA, NIST, SBA, DOL, ED and NSF to foster the Energy Regional Innovation Cluster and leverage the collective resources and expertise of the seven federal agencies involved. During this public webinar, representatives from these agencies will discuss the most frequently asked questions related to the joint FOA and answer any additional questions.

DATES: Wednesday, April 14, 2010, 1:30 p.m.–3:30 p.m. EDT (Participants should register before this date and begin accessing the site between 1 p.m. and 1:15 p.m. on the day of the webinar.)

FOR FURTHER INFORMATION CONTACT: Ron Lewis at *Ronald.Lewis@ee.doe.gov*.

SUPPLEMENTARY INFORMATION: *Purpose of the Meeting:* To answer questions from potential applicants and other interested parties about the joint FOA for the Energy Efficient Building Systems Regional Innovation Cluster Initiative.

Tentative Agenda (Subject to Change):

1:30 p.m.–1:45 p.m. Introduction/Background.

1:45 p.m.–2:15 p.m. Discussion of Frequently Asked Questions.

2:15 p.m.–3:30 p.m. Question and Answer Session.

Public Participation: In keeping with procedures, members of the stakeholder community and the general public are welcome to observe the business of the session and to submit their questions. Advance registration is required to participate in the webinar. To register for the webinar:

1. Click on the following link: *http://www.workforce3one.org/view/5001008860876004249/info*. Participants will be directed to the webinar registration page.

2. At the registration page, scroll to the right hand side of the page and select "log in."

3. Participants will be prompted to log-in to Workforce3one and then redirected back to the registration page. [If you are not already registered for the Workforce3one Web site, select "sign up for Workforce3one." Participants will be prompted to register for Workforce3one. (Registration is quick and free of charge). Once you have registered, you will be sent an e-mail to enable your Workforce3one account. You will need to enable your Workforce3one account before you can register for the webinar.]

4. Select "Reserve Seat Now."

Participants will receive an e-mail that confirms their webinar registration. Prior to the webinar, participants will receive e-mail instructions for dialing into the conference call and logging into the presentation. If multiple participants from the same location are joining the live event, we encourage you to participate in the webinar at one location. If you experience difficulty with the registration process or with accessing a webinar on the day of the

event, please send an e-mail to *webinars@workforce3one.org* or call 732–918–8000 for immediate assistance.

Minutes: The webinar will be archived and can be accessed through the E–RIC Web site at: *www.energy.gov/hubs/eric.htm*. The questions and answers discussed during the webinar will also be posted on the E–RIC Web site.

Issued in Washington, DC, on April 1, 2010.

Henry Kelly,

Principal Deputy Assistant Secretary, Energy Efficiency and Renewable Energy, Department of Energy.

[FR Doc. 2010–7857 Filed 4–6–10; 8:45 am]

BILLING CODE 6450–01–P

DEPARTMENT OF ENERGY

High Energy Physics Advisory Panel

AGENCY: Department of Energy, Office of Science.

ACTION: Notice of open meeting.

SUMMARY: This notice announces a meeting of the High Energy Physics Advisory Panel (HEPAP). Federal Advisory Committee Act (Pub. L. 92–463, 86 Stat. 770) requires that public notice of these meetings be announced in the **Federal Register**.

DATES: Thursday, June 3, 2010, 9 a.m. to 6 p.m.; Friday, June 4, 2010, 8:30 a.m. to 2 p.m.

ADDRESSES: Hotel Palomar, 2121 P Street, NW., Washington, DC 20037.

FOR FURTHER INFORMATION CONTACT: John Kogut, Executive Secretary; High Energy Physics Advisory Panel; U.S. Department of Energy; SC–25/Germantown Building, 1000 Independence Avenue, SW., Washington, DC 20585–1290; Telephone: 301–903–1298.

SUPPLEMENTARY INFORMATION:

Purpose of Meeting: To provide advice and guidance on a continuing basis with respect to the high energy physics research program.

Tentative Agenda: Agenda will include discussions of the following:

Thursday, June 3, 2010 and Friday, June 4, 2010

- Discussion of Department of Energy High Energy Physics Program
- Discussion of National Science Foundation Elementary Particle Physics Program
- Reports on and Discussions of Topics of General Interest in High Energy Physics
- Public Comment (10-minute rule)

Public Participation: The meeting is open to the public. If you would like to file a written statement with the Panel, you may do so either before or after the meeting. If you would like to make oral statements regarding any of these items on the agenda, you should contact John Kogut, 301–903–1298 or *John.Kogut@science.doe.gov* (e-mail). You must make your request for an oral statement at least 5 business days before the meeting. Reasonable provision will be made to include the scheduled oral statements on the agenda. The Chairperson of the Panel will conduct the meeting to facilitate the orderly conduct of business. Public comment will follow the 10-minute rule.

Minutes: The minutes of the meeting will be available for public review and copying within 90 days on the *High Energy Physics Advisory Panel Web site.* Minutes will also be available by writing or calling John Kogut at the address and phone number listed above.

Issued at Washington, DC on April 1, 2010.

Rachel Samuel,

Deputy Committee Management Officer.

[FR Doc. 2010–7858 Filed 4–6–10; 8:45 am]

BILLING CODE 6450–01–P

DEPARTMENT OF ENERGY

Environmental Management Site-Specific Advisory Board Chairs

AGENCY: Department of Energy.

ACTION: Notice of open meeting.

SUMMARY: This notice announces a meeting of the Environmental Management Site-Specific Advisory Board (EM SSAB) Chairs. The Federal Advisory Committee Act (Pub. L. 92–463, 86 Stat. 770) requires that public notice of this meeting be announced in the **Federal Register**.

DATES: Wednesday, April 28, 2010, 8 a.m.—5:30 p.m.

Thursday, April 29, 2010, 8 a.m.—1 p.m.

ADDRESSES: DoubleTree Hotel, 215 South Illinois Avenue, Oak Ridge, Tennessee 37830, Phone: (865) 481–2468.

FOR FURTHER INFORMATION CONTACT: Catherine Alexander Brennan, Designated Federal Officer, U.S. Department of Energy, 1000 Independence Avenue, SW., Washington, DC 20585; Phone: (202) 586–7711.

SUPPLEMENTARY INFORMATION: *Purpose of the Board:* The purpose of the Board is to make recommendations to DOE–EM and site management in the areas of environmental restoration, waste management, and related activities.

Tentative Agenda Topics:

Wednesday, April 28, 2010

○ EM Program Update, Priorities, and American Recovery and Reinvestment Act Discussion

○ EM SSAB Chairs' Round Robin: Top Three Site-Specific Issues, EM SSAB Accomplishments, and Major Board Activities

○ EM Headquarters Budget, Prioritization, and Strategic Planning Update

○ EM Headquarters and National Regulatory Commission Update on Waste Disposition

○ EM SSAB Chairs' Roundtable Discussion: Day One Presentations and Product Development

Thursday, April 29, 2010

○ Stewardship Roundtable Discussion with EM and Legacy Management Headquarters and Current and Former EM SSAB Chairs

○ EM SSAB Chairs' Roundtable Discussion: Day Two Presentations and Product Development

Public Participation: The EM SSAB Chairs welcome the attendance of the public at their advisory committee meetings and will make every effort to accommodate persons with physical disabilities or special needs. If you require special accommodations due to a disability, please contact Catherine Alexander Brennan at least seven days in advance of the meeting at the phone number listed above. Written statements may be filed either before or after the meeting with the Designated Federal Officer, Catherine Alexander Brennan, at the address or telephone listed above. Individuals who wish to make oral statements pertaining to agenda items should also contact Catherine Alexander Brennan. Requests must be received five days prior to the meeting and reasonable provision will be made to include the presentation in the agenda. The Designated Federal Officer is empowered to conduct the meeting in a fashion that will facilitate the orderly conduct of business. Individuals wishing to make public comment will be provided a maximum of five minutes to present their comments.

Minutes: Minutes will be available by writing or calling Catherine Alexander Brennan at the address or phone number listed above. Minutes will also be available at the following Web site: *http://www.em.doe.gov/stakepages/ssabchairs.aspx*.

Issued at Washington, DC on April 1, 2010.

Rachel Samuel,

Deputy Committee Management Officer.

[FR Doc. 2010–7860 Filed 4–6–10; 8:45 am]

BILLING CODE 6450–01–P

DEPARTMENT OF ENERGY

Energy Information Administration

Agency Information Collection Activities: Proposed Collection; Comment Request

AGENCY: Energy Information Administration (EIA), Department of Energy (DOE).

ACTION: Agency Information Collection Activities: Proposed collection; comment request.

SUMMARY: The EIA is soliciting comments on the proposed revision and three-year extension to the following EIA Forms:

- EIA–63A, "Annual Solar Thermal Collector/Reflector Shipments Report."
- EIA–63B, "Annual Photovoltaic Cell/Module Shipments Report."
- EIA–902, "Annual Geothermal Heat Pump Shipments Report."

DATES: Comments must be filed by June 7, 2010. If you anticipate difficulty in submitting comments within that period, contact the person listed below as soon as possible.

ADDRESSES: Send comments to Fred Mayes. To ensure receipt of the comments by the due date, submission by FAX 202–287–1944 or e-mail *fred.mayes@eia.doe.gov* is recommended. The mailing address is U.S. Energy Information Administration, EI–52, Forrestal Building, U.S. Department of Energy, 1000 Independence Ave., SW., Washington, DC 20585. Alternatively, Fred Mayes may be contacted by telephone at 202–586–1508.

FOR FURTHER INFORMATION CONTACT: Requests for additional information or copies of any forms and instructions (the proposed draft collection) should be directed to Fred Mayes at the address listed above. Also see the forms and instructions at *http://www.eia.doe.gov/cneaf/solar.renewables/page/fed_register/renewable_2011.html.*

SUPPLEMENTARY INFORMATION:

I. Background
II. Current Actions
III. Request for Comments

I. Background

The Federal Energy Administration Act of 1974 (15 U.S.C. 761 *et seq.*) and the DOE Organization Act (42 U.S.C. 7101 *et seq.*) require the EIA to carry out a centralized, comprehensive, and unified energy information program. This program collects, evaluates, assembles, analyzes, and disseminates information on energy resource reserves, production, demand, technology, and related economic and statistical information. This information is used to assess the adequacy of energy resources to meet near and longer term domestic demands and to promote sound policymaking, efficient markets, and public understanding of energy and its interaction with the economy and the environment.

The EIA, as part of its effort to comply with the Paperwork Reduction Act of 1995 (44 U.S.C. 3501, *et seq.*), provides the general public and other Federal agencies with opportunities to comment on collections of energy information conducted by or in conjunction with the EIA. Also, the EIA will later seek approval for this collection by the Office of Management and Budget (OMB) under Section 3507(a) of the Paperwork Reduction Act of 1995.

Form EIA–63A, "Annual Solar Thermal Collector/Reflector Shipments Report," collects information on the distribution of solar thermal panels by manufacturers; Form EIA–63B, "Annual Photovoltaic Cell/Module Shipments Report," collects information on the distribution by manufacturers of photovoltaic (PV) cells/modules; and Form EIA–902, "Annual Geothermal Heat Pump Shipments Report," collects information on distribution of geothermal heat pumps by manufacturers. Specifically, all forms collect information on manufacturing, stocks, imports, exports, and domestic shipments. The EIA has been collecting the above information annually and proposes to continue the surveys. The data collected will be disseminated in electronic products and electronic data files for use by government and private sector analysts. For details on EIA's renewables information program, please visit the renewable and alterative fuels page at EIA's Web site at *http://www.eia.doe.gov/fuelrenewable.html.*

Please refer to the proposed forms and instructions for more information about the purpose, who must report, when to report, where to submit, the elements to be reported, detailed instructions, provisions for confidentiality, and uses (including possible nonstatistical uses) of the information. For instructions on obtaining materials, see the **FOR FURTHER INFORMATION CONTACT** section.

II. Current Actions

The following actions are being taken for the EIA 63A, EIA–63B, and EIA–902:

- The forms now request the "total equipment balance" (inventories, production, shipments, imports, exports, stocks), rather than just shipments, imports, and exports.
- End uses are revised as appropriate for each survey but were compressed into fewer categories where possible.
- The number of units and/or number of systems shipped, as appropriate, is now requested.
- Shipments are now obtained by state for each sector, end use. Previously, data did not cross-classify shipments by state by sector or shipments by state by end use.
- The eligible list of survey respondents is now expanded to cover importer/exporter-only companies, domestic subsidiaries of overseas manufacturers, and companies registered on a U.S. stock exchange. This will greatly improve coverage of equipment that is imported directly into the U.S. to an end user.

Changes related to Form EIA–902 only:

- The American Refrigeration Institute (ARI)/International Standards Organization (ISO) GHP classifications are replaced by functional names of greater interest and usage by manufacturers.

Changes related to Forms EIA–63A and EIA–63B only:

- The "Other" collector type was eliminated because too many respondents chose it when a better choice was available.

Changes related to Form EIA–63B only:

- The form now has separate schedules for collecting cells and modules data. Data collected for cells and modules will be slightly different.

III. Request for Comments

Prospective respondents and other interested parties should comment on the actions discussed in item II. The following guidelines are provided to assist in the preparation of comments. Please indicate to which form(s) your comments apply.

As a Potential Respondent to the Request for Information

A. Is the proposed collection of information necessary for the proper performance of the functions of the agency and does the information have practical utility?

B. What actions could be taken to help ensure and maximize the quality, objectivity, utility, and integrity of the information to be collected?

C. Are the instructions and definitions clear and sufficient? If not, which instructions need clarification?

D. Can the information be submitted by the respondent by the due date?

E. Public reporting burden for this collection is estimated to average 4.5 burden hours per response for Form EIA–63A, 4.5 burden hours per response for Form EIA–63B and 4.5 burden hours per response for Form EIA–902. The

estimated burden includes the total time necessary to provide the requested information. In your opinion, how accurate is this estimate?

F. The agency estimates that the only cost to a respondent is for the time it will take to complete the collection. Will a respondent incur any start-up costs for reporting, or any recurring annual costs for operation, maintenance, and purchase of services associated with the information collection?

G. What additional actions could be taken to minimize the burden of this collection of information? Such actions may involve the use of automated, electronic, mechanical, or other technological collection techniques or other forms of information technology.

H. Does any other Federal, State, or local agency collect similar information? If so, specify the agency, the data element(s), and the methods of collection.

As a Potential User of the Information To Be Collected

A. Is the proposed collection of information necessary for the proper performance of the functions of the agency and does the information have practical utility?

B. What actions could be taken to help ensure and maximize the quality, objectivity, utility, and integrity of the information disseminated?

C. Is the information useful at the levels of detail to be collected?

D. For what purpose(s) would the information be used? Be specific.

E. Are there alternate sources for the information and are they useful? If so, what are their weaknesses and/or strengths?

Comments submitted in response to this notice will be summarized and/or included in the request for OMB approval of the form. They also will become a matter of public record.

Statutory Authority: Section 13(b) of the Federal Energy Administration Act of 1974, Pub. L. 93–275, codified at 15 U.S.C. 772(b).

Issued in Washington, DC, April 1, 2010.

Stephanie Brown,

Director, Statistics and Methods Group, Energy Information Administration.

[FR Doc. 2010–7861 Filed 4–6–10; 8:45 am]

BILLING CODE 6450–01–P

DEPARTMENT OF ENERGY

Federal Energy Regulatory Commission

Combined Notice of Filings # 1

March 29, 2010.

Take notice that the Commission received the following electric corporate filings:

Docket Numbers: EC10–56–000.
Applicants: Lost Creek Wind, LLC.
Description: Application of Lost Creek Wind, LLC for Authorization of Disposition of Jurisdictional Facilities, and Requests for Waivers of Certain Filing Requirements, Shortened Comment Period and Expedited Consideration.
Filed Date: 03/26/2010.
Accession Number: 20100326–5110.
Comment Date: 5 p.m. Eastern Time on Friday, April 16, 2010.

Take notice that the Commission received the following electric rate filings:

Docket Numbers: ER05–1195–006.
Applicants: Silverhill, Ltd.
Description: Notification of Non-Material Change in Status of Silverhill Ltd.
Filed Date: 03/26/2010.
Accession Number: 20100326–5015.
Comment Date: 5 p.m. Eastern Time on Friday, April 16, 2010.

Docket Numbers: ER07–501–025; ER10–78–002; ER05–305–006; ER02–1747–007; ER04–878–005; ER98–1767–021; ER99–1695–017; ER99–2984–015; ER02–1942–015; ER02–1749–007.
Applicants: Birchwood Power Partners, L.P.; Orange Grove Energy, L.P.; Pinelawn Power LLC; PPL Shoreham Energy, LLC; Equus Power I, L.P.; Tenaska Frontier Partners, Ltd.; Elwood Energy, LLC; Green Country Energy, LLC; Tenaska Virginia Partners, LP; PPL Edgewood Energy, LLC.
Description: J–Power North America Holdings, Ltd. Notification of Non-Material Change in Status.
Filed Date: 03/26/2010.
Accession Number: 20100326–5121.
Comment Date: 5 p.m. Eastern Time on Friday, April 16, 2010.

Docket Numbers: ER10–678–002.
Applicants: Southwest Power Pool, Inc.
Description: Southwest Power Pool, Inc submits Substitute Sixth Revised Sheet 14 *et al* to its FERC Electric Tariff, Fifth Revised Volume 1 to be effective 3/31/10.
Filed Date: 03/25/2010.
Accession Number: 20100326–0208.
Comment Date: 5 p.m. Eastern Time on Thursday, April 15, 2010.

Docket Numbers: ER10–764–001.
Applicants: Central Maine Power Company.
Description: Central Maine Power Company submits Engineering and Procurement Agreement dated 1/20/09 with Record Hill Wind, LLC designated as Original Service Agreement.
Filed Date: 03/26/2010.
Accession Number: 20100326–0211.
Comment Date: 5 p.m. Eastern Time on Friday, April 16, 2010.

Docket Numbers: ER10–911–001.
Applicants: Wisconsin Electric Power Company.
Description: Wisconsin Electric Power Company submits counterpart signature pages re the Wholesale Distribution Service Agreement.
Filed Date: 03/26/2010.
Accession Number: 20100329–0201.
Comment Date: 5 p.m. Eastern Time on Friday, April 16, 2010.

Docket Numbers: ER10–936–000.
Applicants: Public Service Electric and Gas Company, PSEG Energy Resources & Trade LLC.
Description: Public Service Electric and Gas Company et al submits request for waiver of applicable provisions in market-based rate tariff.
Filed Date: 03/26/2010.
Accession Number: 20100326–0210.
Comment Date: 5 p.m. Eastern Time on Friday, April 16, 2010.

Docket Numbers: ER10–937–000.
Applicants: PacifiCorp.
Description: PacifiCorp submits large Generator Interconnection Agreement Facilities Maintenance Agreement dated 3/9/10 with FPL Energy Stateline II, Inc, *etc.*
Filed Date: 03/26/2010.
Accession Number: 20100326–0212.
Comment Date: 5 p.m. Eastern Time on Friday, April 16, 2010.

Docket Numbers: ER10–938–000.
Applicants: Duke Energy Business Services, LLC.
Description: Duke Energy submits Interconnection Agreement with East Kentucky Power Cooperative, Inc.
Filed Date: 03/26/2010.
Accession Number: 20100329–0205.
Comment Date: 5 p.m. Eastern Time on Friday, April 16, 2010.

Docket Numbers: ER10–939–000.
Applicants: Mid-Continent Area Power Pool.
Description: Mid-Continent Area Power Pool submits Commission revisions to MAPP's FERC Electric Tariff, First Revised Volume 1.
Filed Date: 03/26/2010.
Accession Number: 20100329–0204.
Comment Date: 5 p.m. Eastern Time on Friday, April 16, 2010.

Docket Numbers: ER10–940–000.

Applicants: New York Independent System Operator, Inc.

Description: New York Independent System Operator, Inc submits proposed revisions to its Open Access Transmission Tariff and its Market Administration and Control Area Services Tariff to clarify certain meter data posting and customers review *etc.*

Filed Date: 03/26/2010.

Accession Number: 20100329–0202.

Comment Date: 5 p.m. Eastern Time on Friday, April 16, 2010.

Docket Numbers: ER10–942–000.

Applicants: ISO New England Inc., New England Power Pool.

Description: ISO New England Inc *et al* submit revisions to their Financial Assurance Policy and Billing Policy.

Filed Date: 03/26/2010.

Accession Number: 20100329–0207.

Comment Date: 5 p.m. Eastern Time on Friday, April 16, 2010.

Take notice that the Commission received the following electric securities filings:

Docket Numbers: ES10–31–000.

Applicants: Midwest Independent Transmission System Operator, Inc.

Description: Application of Midwest Independent Transmission System Operator, Inc. under Section 204 of the Federal Power Act to Issue Securities.

Filed Date: 03/26/2010.

Accession Number: 20100326–5122.

Comment Date: 5 p.m. Eastern Time on Friday, April 16, 2010.

Any person desiring to intervene or to protest in any of the above proceedings must file in accordance with Rules 211 and 214 of the Commission's Rules of Practice and Procedure (18 CFR 385.211 and 385.214) on or before 5 p.m. Eastern time on the specified comment date. It is not necessary to separately intervene again in a subdocket related to a compliance filing if you have previously intervened in the same docket. Protests will be considered by the Commission in determining the appropriate action to be taken, but will not serve to make protestants parties to the proceeding. Anyone filing a motion to intervene or protest must serve a copy of that document on the Applicant. In reference to filings initiating a new proceeding, interventions or protests submitted on or before the comment deadline need not be served on persons other than the Applicant.

The Commission encourages electronic submission of protests and interventions in lieu of paper, using the FERC Online links at *http://www.ferc.gov.* To facilitate electronic service, persons with Internet access who will eFile a document and/or be listed as a contact for an intervenor must create and validate an eRegistration account using the eRegistration link. Select the eFiling link to log on and submit the intervention or protests.

Persons unable to file electronically should submit an original and 14 copies of the intervention or protest to the Federal Energy Regulatory Commission, 888 First St. NE., Washington, DC 20426.

The filings in the above proceedings are accessible in the Commission's eLibrary system by clicking on the appropriate link in the above list. They are also available for review in the Commission's Public Reference Room in Washington, DC. There is an eSubscription link on the Web site that enables subscribers to receive e-mail notification when a document is added to a subscribed dockets(s). For assistance with any FERC Online service, please e-mail *FERCOnlineSupport@ferc.gov.* or call (866) 208–3676 (toll free). For TTY, call (202) 502–8659.

Nathaniel J. Davis, Sr.,

Deputy Secretary.

[FR Doc. 2010–7818 Filed 4–6–10; 8:45 am]

BILLING CODE 6717–01–P

DEPARTMENT OF ENERGY

Federal Energy Regulatory Commission

Combined Notice of Filings #1

March 31, 2010.

Take notice that the Commission received the following electric rate filings:

Docket Numbers: ER00–1372–006; ER07–496–003.

Applicants: Alcoa Power Generating Inc.; Alcoa Power Marketing, LLC.

Description: Amendment to Request for Exemption from the Triennial Market Power Update Reporting Requirements for Category 2 Sellers for the Northwest Region.

Filed Date: 03/29/2010.

Accession Number: 20100330–0030.

Comment Date: 5 p.m. Eastern Time on Monday, April 19, 2010.

Docket Numbers: ER04–1220–001.

Applicants: Caprock Wind LLC.

Description: Amendment to Caprock Wind LLC's Request for Category 1 Seller Status.

Filed Date: 03/30/2010.

Accession Number: 20100330–5120.

Comment Date: 5 p.m. Eastern Time on Tuesday, April 20, 2010.

Docket Numbers: ER10–769–003.

Applicants: Glenwood Energy Partners, LTD.

Description: Glenwood Energy Partners, LTD submits the Petition for Acceptance of Initial Rater Schedule, Waivers, and Blanket Authority.

Filed Date: 03/30/2010.

Accession Number: 20100331–0228.

Comment Date: 5 p.m. Eastern Time on Tuesday, April 20, 2010.

Docket Numbers: ER10–952–000.

Applicants: Virginia Electric and Power Company.

Description: Virginia Electric and Power Company submits notice of cancellation and a cancelled service agreement sheet terminating a Power Sales Agreement *etc.*

Filed Date: 03/30/2010.

Accession Number: 20100330–0244.

Comment Date: 5 p.m. Eastern Time on Tuesday, April 20, 2010.

Docket Numbers: ER10–953–000.

Applicants: Midwest Independent Transmission System Operator, Inc.

Description: Midwest Independent Transmission System Operator, Inc. proposed revisions to its Attachment LL, *et al.,* of the Midwest ISO Access Transmission *et al.*

Filed Date: 03/30/2010.

Accession Number: 20100330–0246.

Comment Date: 5 p.m. Eastern Time on Tuesday, April 20, 2010.

Docket Numbers: ER10–954–000.

Applicants: Midwest Independent Transmission System Operator, Inc.

Description: Midwest Independent Transmission System Operator, Inc. *et al.,* submits proposed revisions to the Congestion Management Process of the Joint Operating Agreement between the Midwest ISO *et al.*

Filed Date: 03/30/2010.

Accession Number: 20100330–0245.

Comment Date: 5 p.m. Eastern Time on Tuesday, April 20, 2010.

Docket Numbers: ER10–955–000.

Applicants: Arizona Public Service Company.

Description: Arizona Public Service Company submits an amendment to Exhibit B to the 1991 Operation Maintenance, and Replacement of Facilities Agreement with the Western Area Power Administration.

Filed Date: 03/30/2010.

Accession Number: 20100330–0248.

Comment Date: 5 p.m. Eastern Time on Tuesday, April 20, 2010.

Docket Numbers: ER10–956–000.

Applicants: Vantage Wind Energy LLC.

Description: Vantage Wind Energy LLC submits an application for authorization to make market-based wholesale sales of energy, capacity, and ancillary services under FERC Electric Tariff No. 1 and requests for related waivers *etc.*

Filed Date: 03/30/2010.
Accession Number: 20100331–0209.
Comment Date: 5 p.m. Eastern Time on Tuesday, April 20, 2010.

Docket Numbers: ER10–957–000.
Applicants: Southwest Power Pool, Inc.
Description: Southwest Power Pool, Inc. submits an executed Meter Agent Services Agreement with Energy Authority, Inc. *et al.*
Filed Date: 03/30/2010.
Accession Number: 20100331–0207.
Comment Date: 5 p.m. Eastern Time on Tuesday, April 20, 2010.

Docket Numbers: ER10–958–000.
Applicants: Lockhart Power Company.
Description: Lockhart Power Company request for revisions to FERC Electric Tariff, Original Volume No. 1 providing service to the City of Union, South Carolina.
Filed Date: 03/30/2010.
Accession Number: 20100331–0206.
Comment Date: 5 p.m. Eastern Time on Tuesday, April 20, 2010.

Docket Numbers: ER10–959–000.
Applicants: Central Maine Power Company.
Description: Central Maine Power Company submits an Amended Interconnection Agreement with Sparhawk Mill Associates, LLC.
Filed Date: 03/30/2010.
Accession Number: 20100331–0215.
Comment Date: 5 p.m. Eastern Time on Tuesday, April 20, 2010.

Docket Numbers: ER10–960–000.
Applicants: Central Maine Power Company.
Description: Central Maine Power Company submits an Amended Interconnection Agreement with Marsh Power LP.
Filed Date: 03/30/2010.
Accession Number: 20100331–0212.
Comment Date: 5 p.m. Eastern Time on Tuesday, April 20, 2010.

Docket Numbers: ER10–961–000.
Applicants: Idaho Power Company.
Description: Idaho Power Co. submits their Network Integration Service Agreement, Third Revised Service Agreement 159 to FERC Electric Tariff, First Revised Volume 6.
Filed Date: 03/30/2010.
Accession Number: 20100331–0214.
Comment Date: 5 p.m. Eastern Time on Tuesday, April 20, 2010.

Docket Numbers: ER10–962–000.
Applicants: Union Electric Company.
Description: Union Electric Company submits a proposed new Rate Schedule FERC No. 22 with supporting cost data.
Filed Date: 03/31/2010.
Accession Number: 20100331–0216.
Comment Date: 5 p.m. Eastern Time on Wednesday, April 21, 2010.

Docket Numbers: ER10–963–000.
Applicants: Tampa Electric Company.
Description: Tampa Electric Company submits First Revised Sheet 3 to FERC Electric Tariff, Original Volume 7, to be effective 4/1/10.
Filed Date: 03/31/2010.
Accession Number: 20100331–0219.
Comment Date: 5 p.m. Eastern Time on Wednesday, April 21, 2010.

Docket Numbers: ER10–964–000.
Applicants: Central Maine Power Company.
Description: Central Maine Power Company submits an Amended Interconnection Agreement by and with Kennebec Water District.
Filed Date: 03/30/2010.
Accession Number: 20100331–0223.
Comment Date: 5 p.m. Eastern Time on Tuesday, April 20, 2010.

Docket Numbers: ER10–965–000.
Applicants: PJM Interconnection, LLC.
Description: PJM Interconnection, LLC submits a notice of cancellation of the executed Transmission Service Agreements.
Filed Date: 03/31/2010.
Accession Number: 20100331–0229.
Comment Date: 5 p.m. Eastern Time on Wednesday, April 21, 2010.

Docket Numbers: ER10–966–000.
Applicants: California Independent System Operator Corporation.
Description: The California Independent System Operator Corporation submits Third Revised Sheet 217 *et al.* to FERC Electric Tariff, Fourth Replacement Volume 1, to be effective 3/31/10.
Filed Date: 03/31/2010.
Accession Number: 20100331–0230.
Comment Date: 5 p.m. Eastern Time on Wednesday, April 21, 2010.

Docket Numbers: ER10–967–000.
Applicants: Central Maine Power Company.
Description: Central Maine Power Company submits petitions to terminate the Interconnection Agreement with Moosehead Energy, Inc.
Filed Date: 03/31/2010.
Accession Number: 20100331–0231.
Comment Date: 5 p.m. Eastern Time on Wednesday, April 21, 2010.

Docket Numbers: ER10–968–000.
Applicants: Cleco Power LLC.
Description: Cleco Power LLC submits a Service Agreement for Network Integration Transmission.
Filed Date: 03/31/2010.
Accession Number: 20100331–0232.
Comment Date: 5 p.m. Eastern Time on Wednesday, April 21, 2010.

Take notice that the Commission received the following open access transmission tariff filings:

Docket Numbers: OA09–16–001.
Applicants: Northeast Utilities Service Company.
Description: Northeast Utilities Service Company's Order 890 compliance filing of its operational penalties report.
Filed Date: 03/31/2010.
Accession Number: 20100331–5157.
Comment Date: 5 p.m. Eastern Time on Wednesday, April 21, 2010.

Take notice that the Commission received the following public utility holding company filings:

Docket Numbers: PH10–12–000.
Applicants: Brookfield Asset Management Inc.
Description: Brookfield Asset Management Inc., *et al.'s* Notice of Change in Facts.
Filed Date: 03/30/2010.
Accession Number: 20100330–5098.
Comment Date: 5 p.m. Eastern Time on Tuesday, April 20, 2010.

Any person desiring to intervene or to protest in any of the above proceedings must file in accordance with Rules 211 and 214 of the Commission's Rules of Practice and Procedure (18 CFR 385.211 and 385.214) on or before 5 p.m. Eastern time on the specified comment date. It is not necessary to separately intervene again in a subdocket related to a compliance filing if you have previously intervened in the same docket. Protests will be considered by the Commission in determining the appropriate action to be taken, but will not serve to make protestants parties to the proceeding. Anyone filing a motion to intervene or protest must serve a copy of that document on the Applicant. In reference to filings initiating a new proceeding, interventions or protests submitted on or before the comment deadline need not be served on persons other than the Applicant.

The Commission encourages electronic submission of protests and interventions in lieu of paper, using the FERC Online links at *http://www.ferc.gov.* To facilitate electronic service, persons with Internet access who will eFile a document and/or be listed as a contact for an intervenor must create and validate an eRegistration account using the eRegistration link. Select the eFiling link to log on and submit the intervention or protests.

Persons unable to file electronically should submit an original and 14 copies of the intervention or protest to the Federal Energy Regulatory Commission, 888 First St., NE., Washington, DC 20426.

The filings in the above proceedings are accessible in the Commission's eLibrary system by clicking on the appropriate link in the above list. They are also available for review in the Commission's Public Reference Room in Washington, DC. There is an eSubscription link on the Web site that enables subscribers to receive e-mail notification when a document is added to a subscribed docket(s). For assistance with any FERC Online service, please e-mail *FERCOnlineSupport@ferc.gov* or call (866) 208–3676 (toll free). For TTY, call (202) 502–8659.

Nathaniel J. Davis, Sr.,

Deputy Secretary.

[FR Doc. 2010–7817 Filed 4–6–10; 8:45 am]

BILLING CODE 6717–01–P

DEPARTMENT OF ENERGY

Federal Energy Regulatory Commission

[Docket No. EL10–53–000]

FPL Energy Maine Hydro LLC, Complainant v. Great Lakes Hydro America LLC Rumford Falls Hydro LLC, Respondents; Notice of Complaint

March 29, 2010.

Take notice that on March 26, 2010, pursuant to section 206 of the Federal Energy Regulatory Commission's (Commission) Rules and Practice and Procedure, 18 CFR 385.206 (2009) and sections 10(f) and 306 of the Federal Power Act, 16 U.S.C. 803 and 825(e), FPL Energy Maine Hydro LLC (Complainant) filed a formal complaint against Great Lakes Hydro America LLC and Rumford Falls Hydro LLC (Respondents) alleging that Respondents are violating Article 11 of Form L–3 (October, 1975) of their FERC hydro licenses by improperly obstructing Complainant's efforts to allocate and recover costs associated with a remediation project designed to bring the Upper and Middle Dams into compliance with the Commission's Part 12 safety regulations, 18 CFR part 12 (2009 (Renewal Project), in accordance with the Androscoggin Headwater Benefits Agreement approved by the Commission in 1992. *Androscoggin Reservoir Company,* 59 FERC 62,372 (1992).

The Complainant certifies that copies of the complaint were served on the Respondents, all parties to the Androscoggin Headwater Benefits Agreement, and the Maine Pubic Utilities Commission.

Any person desiring to intervene or to protest this filing must file in accordance with Rules 211 and 214 of the Commission's Rules of Practice and Procedure (18 CFR 385.211, 385.214). Protests will be considered by the Commission in determining the appropriate action to be taken, but will not serve to make protestants parties to the proceeding. Any person wishing to become a party must file a notice of intervention or motion to intervene, as appropriate. The Respondent's answer and all interventions, or protests must be filed on or before the comment date. The Respondent's answer, motions to intervene, and protests must be served on the Complainants.

The Commission encourages electronic submission of protests and interventions in lieu of paper using the "eFiling" link at *http://www.ferc.gov.* Persons unable to file electronically should submit an original and 14 copies of the protest or intervention to the Federal Energy Regulatory Commission, 888 First Street, NE., Washington, DC 20426.

This filing is accessible on-line at *http://www.ferc.gov,* using the "eLibrary" link and is available for review in the Commission's Public Reference Room in Washington, DC. There is an "eSubscription" link on the Web site that enables subscribers to receive e-mail notification when a document is added to a subscribed docket(s). For assistance with any FERC Online service, please e-mail *FERCOnlineSupport@ferc.gov,* or call (866) 208–3676 (toll free). For TTY, call (202) 502–8659.

Comment Date: 5 p.m. Eastern Time on April 15, 2010.

Nathaniel J. Davis, Sr.,

Deputy Secretary.

[FR Doc. 2010–7819 Filed 4–6–10; 8:45 am]

BILLING CODE 6717–01–P

DEPARTMENT OF ENERGY

Federal Energy Regulatory Commission

[Docket No. OR10–11–000]

Flint Hills Resources, LP, Complainant v. Mid-America Pipeline Company, LLC, Respondent; Notice of Complaint

March 29, 2010.

Take notice that on March 26, 2010, pursuant to Rule 206 of the Rules of Practice and Procedure of the Federal Energy Regulatory Commission (Commission), 18 CFR 385.206; the Commission's Procedural Rules Applicable to Oil Pipeline Proceedings, 18 CFR 343.2 and sections 2, 3, 13, and 15 of the Interstate Commerce Act, 49 U.S.C. App. 2, 3, 13, and 15 (1988), Flint Hills Resources, LP (Complainant) filed a complaint against Mid-America Pipeline Company, LLC (Respondent) challenging the Respondent's rates for transporting butane, isobutane, natural gasoline, naphtha and refinery grade butane on the Respondent's Northern interstate pipeline system as unjustly discriminatory in relation Respondent's rates charged to propane shippers for substantially similar service.

Complainant certifies that copies of the complaint were served on the contacts for the Respondent.

Any person desiring to intervene or to protest this filing must file in accordance with Rules 211 and 214 of the Commission's Rules of Practice and Procedure (18 CFR 385.211, 385.214). Protests will be considered by the Commission in determining the appropriate action to be taken, but will not serve to make protestants parties to the proceeding. Any person wishing to become a party must file a notice of intervention or motion to intervene, as appropriate. The Respondent's answer and all interventions, or protests must be filed on or before the comment date. The Respondent's answer, motions to intervene, and protests must be served on the Complainants.

The Commission encourages electronic submission of protests and interventions in lieu of paper using the "eFiling" link at *http://www.ferc.gov*. Persons unable to file electronically should submit an original and 14 copies of the protest or intervention to the Federal Energy Regulatory Commission, 888 First Street, NE., Washington, DC 20426.

This filing is accessible on-line at *http://www.ferc.gov*, using the "eLibrary" link and is available for review in the Commission's Public Reference Room in Washington, DC. There is an "eSubscription" link on the Web site that enables subscribers to receive e-mail notification when a document is added to a subscribed docket(s). For assistance with any FERC Online service, please e-mail *FERCOnlineSupport@ferc.gov*, or call (866) 208–3676 (toll free). For TTY, call (202) 502–8659.

Comment Date: 5 p.m. Eastern Time on April 15, 2010.

Nathaniel J. Davis, Sr.,

Deputy Secretary.

[FR Doc. 2010–7820 Filed 4–6–10; 8:45 am]

BILLING CODE 6717–01–P

DEPARTMENT OF ENERGY

Federal Energy Regulatory Commission

[Docket No. DI10–5–000]

Alaska Power & Telephone Company; Notice of Declaration of Intention and Soliciting Comments, Protests, and/or Motions To Intervene

March 30, 2010.

Take notice that the following application has been filed with the Commission and is available for public inspection:

a. *Application Type:* Declaration of Intention.

b. *Docket No.:* DI10–5–000.

c. *Date Filed:* December 23, 2009, and supplemented on January 12, February 4, February 24, March 16, and March 23, 2010.

d. *Applicant:* Alaska Power & Telephone Company.

e. *Name of Project:* Neck Lake Hydroelectric Project.

f. *Location:* The proposed Neck Lake Hydroelectric Project will be located on Neck Lake outlet stream, near the community of Whale Pass, Alaska, (T. 66 S., R. 79 E., sec. 35, Copper River Meridian, Alaska).

g. *Filed Pursuant to:* Section 23(b)(1) of the Federal Power Act, 16 U.S.C. 817(b).

h. *Applicant Contact:* Glen D. Martin, 193 Otto Street, P.O. Box 3222, Port Townsend, WA 98368; telephone: (360) 385–1733 x122; Fax: (360) 385–7538; e-mail: *glen.m@aptalaska.com.*

i. *FERC Contact:* Any questions on this notice should be addressed to Diane M. Murray, (202) 502–8838, or e-mail address: *diane.murray@ferc.gov.*

j. *Deadline for filing comments, protests, and/or motions:* April 30, 2010.

Comments, Motions to Intervene, and Protests may be filed electronically via the Internet. See 18 CFR 385.2001(a)(l)(iii) and the instructions on the Commission's Web site under the "eFiling" link. If unable to be filed electronically, documents may be paper-filed. To paper-file, an original and eight copies should be mailed to: Secretary, Federal Energy Regulatory Commission, 888 First Street, NE., Washington, DC 20426. For more information on how to submit these types of filings, please go to the Commission's Web site located at *http://www.ferc.gov/filing-comments.asp.*

Please include the docket number (DI10–5–000) on any comments, protests, and/or motions filed.

k. *Description of Project:* The proposed Neck Lake Hydroelectric Project would consist of: (1) A small reservoir; (2) a three-foot-high, 75-foot-long dam, located approximately 1,300 feet below the Neck Lake outlet; (3) a 400-foot-long penstock; (4) a proposed powerhouse containing a generator with a capacity of 124 kW–400 kW; (5) a transmission line; (6) an access road; and (7) appurtenant facilities.

When a Declaration of Intention is filed with the Federal Energy Regulatory Commission, the Federal Power Act requires the Commission to investigate and determine if the interests of interstate or foreign commerce would be affected by the project. The Commission also determines whether or not the project: (1) Would be located on a navigable waterway; (2) would occupy or affect public lands or reservations of the United States; (3) would utilize surplus water or water power from a government dam; or (4) if applicable, has involved or would involve any construction subsequent to 1935 that may have increased or would increase the project's head or generating capacity, or have otherwise significantly modified the project's pre-1935 design or operation.

l. Locations of the Application: Copies of this filing are on file with the Commission and are available for public inspection. This filing may be viewed on the Web at *http://www.ferc.gov* using the "eLibrary" link. Enter the Docket number excluding the last three digits in the docket number field to access the document. You may also register online at *http://www.ferc.gov/docs-filing/esubscription.asp* to be notified via e-mail of new filings and issuances related to this or other pending projects. For assistance, call 1–866–208–3676 or e-mail *FERCOnlineSupport@ferc.gov* for TTY, call (202) 502–8659. A copy is also available for inspection and reproduction at the address in item (h) above.

m. Individuals desiring to be included on the Commission's mailing list should so indicate by writing to the Secretary of the Commission.

n. Comments, Protests, or Motions to Intervene—Anyone may submit comments, a protest, or a motion to intervene in accordance with the requirements of Rules of Practice and Procedure, 18 CFR 385.210, .211, .214. In determining the appropriate action to take, the Commission will consider all protests or other comments filed, but only those who file a motion to intervene in accordance with the Commission's Rules may become a party to the proceeding. Any comments, protests, or motions to intervene must be received on or before the specified comment date for the particular application.

o. Filing and Service of Responsive Documents—All filings must bear in all capital letters the title "COMMENTS", "PROTESTS", AND/OR "MOTIONS TO INTERVENE", as applicable, and the Docket Number of the particular application to which the filing refers. A copy of any Motion to Intervene must also be served upon each representative of the Applicant specified in the particular application.

p. Agency Comments—Federal, state, and local agencies are invited to file comments on the described application. A copy of the application may be obtained by agencies directly from the Applicant. If an agency does not file comments within the time specified for filing comments, it will be presumed to have no comments. One copy of an agency's comments must also be sent to the Applicant's representatives.

Nathaniel J. Davis, Sr.,

Deputy Secretary.

[FR Doc. 2010–7824 Filed 4–6–10; 8:45 am]

BILLING CODE 6717–01–P

DEPARTMENT OF ENERGY

Federal Energy Regulatory Commission

[Docket No. CP10–99–000]

Arlington Storage Company, LLC; Notice of Filing

March 30, 2010.

Take notice that on March 24, 2010, Arlington Storage Company, LLC (ASC), Two Brush Creek Boulevard, Kansas City, Missouri 64112, filed an application, pursuant to section 7(c) of the Natural Gas Act (NGA) and parts 157 and 284 of the Commission's Rules and Regulations, for a certificate of public convenience and necessity authorizing ASC to acquire and operate an existing underground natural gas storage facility located in Schuyler County, New York known as the Seneca Lake Facility. The application is on file with the Commission and open for public inspection. This filing is available for review at the Commission in the Public Reference Room or may be viewed on the Commission's Web site at *http://www.ferc.gov* using the "eLibrary" link. Enter the docket number excluding the last three digits in the docket number field to access the document. For assistance, please contact FERC Online Support at *FERCOnlineSupport@ferc.gov* or toll free at (866) 208–3676, or for TTY, contact (202) 502–8659.

The Seneca Lake Facility is currently owned and operated by New York State Electric & Gas Corporation (NYSEG). The facility consists of a salt storage cavern, a 7,761 horsepower compression station, and an 18.6 mile section of high pressure pipeline (West Lateral) connecting to the DTI system in the town of Big Flats, New York. The storage capacity of the Seneca Lake Facility is 2.34 Bcf and the facility has a working gas capacity of 1.45 Bcf. The Seneca Lake Facility can compress up to 72.5 MMcf/d during the injection cycle and up to 145 MMcf/d during the withdrawal cycle. ASC requests authority to charge market-based rates for the Project.

Any questions regarding the application are to be directed to William R. Moler, Senior Vice President, Midstream Operations, Arlington Storage Company, LLC, Two Brush Creek Boulevard, Suite 200, Kansas City, Missouri 64112; phone number (816) 329–5344 or by e-mail at *bmoler@inergyservices.com.*

Any person wishing to obtain legal status by becoming a party to the proceedings for this project should, on or before the below listed comment date, file with the Federal Energy Regulatory Commission, 888 First Street, NE., Washington, DC 20426, a motion to intervene in accordance with the requirements of the Commission's Rules of Practice and Procedure (18 CFR 385.214 or 385.211) and the Regulations under the NGA (18 CFR 157.10). A person obtaining party status will be placed on the service list maintained by the Secretary of the Commission and will receive copies of all documents filed by the applicant and by all other parties. A party must submit 14 copies of filings made with the Commission and must mail a copy to the applicant and to every other party in the proceeding. Only parties to the proceeding can ask for court review of Commission orders in the proceeding.

Motions to intervene, protests and comments may be filed electronically via the Internet in lieu of paper, see, 18 CFR 385.2001 (a)(1)(iii) and the instructions on the Commission's Web site under the "e-Filing" link. The Commission strongly encourages electronic filings.

Comment Date: April 20, 2010.

Nathaniel J. Davis, Sr.,

Deputy Secretary.

[FR Doc. 2010–7822 Filed 4–6–10; 8:45 am]

BILLING CODE 6717–01–P

DEPARTMENT OF ENERGY

Federal Energy Regulatory Commission

[Docket No. CP10–101–000]

Kinder Morgan Louisiana Pipeline LLC; Notice of Request Under Blanket Authorization

March 30, 2010.

Take notice that on March 25, 2010, Kinder Morgan Louisiana Pipeline LLC (KMLP), 3250 Lacey Road, Suite 700, Downers Grove, IL 60515, filed in Docket No. CP10–101–000, a prior notice request pursuant to sections 157.205, 157.208, 157.211, and 157.212 of the Commission's regulations under the Natural Gas Act (NGA). KMLP seeks authorization to construct and operate a new tap, including ball valve and riser and approximately 15 feet of 8-inch pipe to connect the KMPL system to Targa Louisiana Field Services LLC in Calcasieu Parish, Louisiana in order to deliver re-vaporized liquefied natural gas to Targa. KMLP proposes to perform these activities under its blanket certificate issued in Docket No. CP06–451–000 [119 FERC ¶ 61,309 (2007)], all as more fully set forth in the application which is on file with the Commission and open to public inspection.

Specifically, KMLP proposes to construct and operate facilities in Calcacieu Parish, Louisiana necessary to establish an interconnection with Targa's non-jurisdictional natural gas gathering and processing facilities. The facilities to be constructed by KMLP include an 8-inch tap, 8-inch ball valve, riser, 15-feet of 8-inch diameter piping and such other appurtenant facilities as deemed necessary to effectuate the interconnect. The remainder of the interconnect will be comprised of non-jurisdictional facilities such as meter tube outlet vents, valve actuators, over pressure protection, a line heater, and cathodic protection equipment to be constructed by Targa on an existing meter site associated with Targa's gathering and processing facilities. This interconnection will allow KMLP to deliver up to 100,000 MMBTU/day of re-vaporized liquefied natural gas to Targa for processing. The total cost of the proposed project is estimated to be $469,000. The proposed in-service date for the interconnect and related facilities is mid to late June 2010.

The filing may be viewed on the Web at *http://www.ferc.gov* using the "eLibrary" link. Enter the docket number excluding the last three digits in the docket number field to access the document. For assistance, contact FERC at *FERCOnlineSupport@ferc.gov* or call toll-free, (886) 208–3676 or TYY, (202) 502–8659.

Any questions regarding this application may be directed to Norman Watson, Director, Business Development, Kinder Morgan Louisiana Pipeline LLC, 500 Dallas Street, Suite 1000, Houston, Texas 77002 at (713) 369–9219 or Bruce Newsome, Vice President, 3250 Lacey Road, Suite 700, Downers Grove, IL 60515 at (630) 725–3070.

Any person or the Commission's Staff may, within 60 days after the issuance of the instant notice by the Commission, file pursuant to Rule 214 of the Commission's Procedural Rules (18 CFR 385.214) a motion to intervene or notice of intervention and, pursuant to section 157.205 of the Commission's Regulations under the NGA (18 CFR 157.205) a protest to the request. If no protest is filed within the time allowed therefore, the proposed activity shall be deemed to be authorized effective the day after the time allowed for protest. If a protest is filed and not withdrawn within 30 days after the time allowed for filing a protest, the instant request shall be treated as an application for authorization pursuant to section 7 of the NGA.

The Commission strongly encourages electronic filings of comments, protests, and interventions via the Internet in lieu of paper. See 18 CFR 385.2001(a)(1)(iii) and the instructions on the Commission's Web site (*http://www.ferc.gov*) under the "e-Filing" link. Persons unable to file electronically should submit an original and 14 copies of the protest or intervention to the Federal Energy regulatory Commission, 888 First Street, NE., Washington, DC 20426.

Nathaniel J. Davis, Sr.,

Deputy Secretary.

[FR Doc. 2010–7823 Filed 4–6–10; 8:45 am]

BILLING CODE 6717–01–P

DEPARTMENT OF ENERGY

Federal Energy Regulatory Commission

[Docket No. PL10–4–000]

Enforcement of Statutes, Orders, Rules and Regulations; Second Notice of Workshops on Penalty Guidelines

March 30, 2010.

As noticed in the March 24, 2010, "Notice of Workshops on Penalty Guidelines," the staff of the Federal Energy Regulatory Commission (Commission) will hold three workshops to provide a forum for

interested participants to ask questions on the interpretation and application of the Policy Statement on Penalty Guidelines, which the Commission recently issued on March 18, 2010.[1] Staff will hold the first workshop on April 7, 2010, from 9:30 a.m. to 12 p.m. Eastern Daylight Time, in the Commission Meeting Room (2C) at the Commission's Washington, DC headquarters, 888 First Street, NE. To accommodate participants outside of Washington, DC, this workshop will be Webcast, but will not be transcribed. To access this free Webcast, anyone with Internet access can go to Calendar of Events on the FERC Web site which contains a link to the Webcast. For questions on the Webcast call 703–993–3100.

All interested parties are invited to all three of the workshops; there is no registration list or registration fee to attend.

The purpose of this second notice is to provide the times and locations for staff's subsequent workshops in Houston, Texas and San Francisco, California. Staff will hold the Houston workshop on April 14, 2010, from 9:30 a.m. to 12 p.m. Central Daylight Time, at the Houston Airport Marriott at George Bush Intercontinental, 18700 John F. Kennedy Boulevard, Houston, Texas 77032. Staff will hold the San Francisco workshop on April 15, 2010, from 9:30 a.m. to 12 p.m. Pacific Daylight Time, at the Westin San Francisco Airport, 1 Old Bayshore Highway, Millbrae, California 94030. The Houston and San Francisco workshops will not be webcast.

As indicated, the purpose of the workshops will be to have staff discuss how the Penalty Guidelines will be applied and to answer questions about the Penalty Guidelines. In that regard, questions are being solicited from the public in advance of the workshops. Please submit questions on the Penalty Guidelines to Jeremy Medovoy, Attorney-Advisor, Office of Enforcement, Division of Investigations, by e-mail at *Jeremy.Medovoy@ferc.gov.* Workshop participants will also have an opportunity to ask questions at the workshops, but due to time limitations, questions in advance are encouraged.

Questions about the workshops may be directed to Jeremy Medovoy by e-mail at *Jeremy.Medovoy@ferc.gov* or by telephone at 202–502–6768.

Nathaniel J. Davis, Sr.,

Deputy Secretary.

[FR Doc. 2010–7821 Filed 4–6–10; 8:45 am]

BILLING CODE 6717–01–P

ENVIRONMENTAL PROTECTION AGENCY

[EPA–R04–OAR–2010–0153–201010–TN; FRL–9133–9]

Adequacy Status of the Knoxville, Tennessee 1997 $PM_{2.5}$ Attainment Demonstration Motor Vehicle Emissions Budgets for Transportation Conformity Purposes

AGENCY: Environmental Protection agency (EPA).

ACTION: Notice of adequacy.

SUMMARY: In this notice, EPA is notifying the public that EPA has found that the direct particulate matter ($PM_{2.5}$) and Nitrogen Oxides (NO_X) motor vehicle emissions budgets (MVEBs) in the Knoxville, Tennessee Attainment Demonstration Plan for the 1997 $PM_{2.5}$ standard, submitted April 4, 2008, by the Tennessee Department of Environment and Conservation (TDEC), are adequate for transportation conformity purposes. On March 2, 1999, the United States Court of Appeals for the District of Columbia Circuit (DC Circuit) ruled that submitted State Implementation Plans (SIPs) cannot be used for transportation conformity determinations until EPA has affirmatively found them adequate. As a result of EPA's finding, the Knoxville, Tennessee area, including the portion of Roane County, must use the MVEBs for future conformity determinations for the 1997 $PM_{2.5}$ standard.

DATES: The adequacy finding for the $PM_{2.5}$ and NO_X MVEBs are effective April 22, 2010.

FOR FURTHER INFORMATION CONTACT: Kelly Sheckler, Environmental Scientist, U.S. Environmental Protection Agency, Region 4, Air Planning Branch, Air Quality Modeling and Transportation Section, 61 Forsyth Street, SW., Atlanta, Georgia 30303. Ms. Sheckler can also be reached by telephone at (404) 562–9222, or via electronic mail at *sheckler.kelly@epa.gov.* The finding is available at EPA's conformity Web site: *http://www.epa.gov/otaq/stateresources/transconf/adequacy.htm*

SUPPLEMENTARY INFORMATION: This notice is simply an announcement of findings that EPA has already made. EPA Region 4 sent a letter to TDEC on February 11, 2010, stating that the $PM_{2.5}$ and NO_X MVEBs in the 1997 $PM_{2.5}$ attainment demonstration for Knoxville, Tennessee, submitted April 4, 2008, are adequate and must be used for transportation conformity determinations in the Knoxville area. EPA posted the availability of the Knoxville MVEBs on EPA's Web site on April 14, 2008, as part of the adequacy process, for the purpose of soliciting comments. The comment period ran from April 14, 2008, through May 14, 2008. During EPA's adequacy comment period, no comments were received on the MVEBs for the area. Through this notice, EPA is informing the public that these MVEBs are adequate for transportation conformity. EPA's findings have also been announced on EPA's conformity Web site: *http://www.epa.gov/otaq/stateresources/transconf/adequacy.htm.* The $PM_{2.5}$ and NO_x MVEBs are provided in the following table:

KNOXVILLE AREA DIRECT $PM_{2.5}$ AND NO_X MVEBS

[Tons per year]

Counties	Pollutant	2009
Anderson, Blount, Knox, Loudon and a portion of Roane County	$PM_{2.5}$	283.63
Anderson, Blount, Knox, Loudon and a portion of Roane County	NO_X	18,024.9

Transportation conformity is required by section 176(c) of the Clean Air Act, as amended in 1990. EPA's conformity rule requires that transportation plans, programs and projects conform to State air quality implementation plans and establishes the criteria and procedures for determining whether or not they do. Conformity to a SIP means that transportation activities will not produce new air quality violations, worsen existing violations, or delay

[1] *Enforcement of Statutes, Orders, Rules, and Regulations,* 130 FERC ¶ 61,220 (2010).

timely attainment of the national ambient air quality standards.

The criteria by which EPA determines whether a SIP's MVEBs are adequate for transportation conformity purposes are outlined in 40 Code of Federal Regulations 93.118(e)(4). Please note that an adequacy review is separate from EPA's completeness review, and it also should not be used to prejudge EPA's ultimate approval of the attainment demonstration plan for the Knoxville, Tennessee area. Even if EPA finds the budget adequate, the attainment demonstration plan could later be disapproved.

EPA has described the process for determining the adequacy of submitted SIP budgets in a May 14, 1999, memorandum entitled "Conformity Guidance on Implementation of March 2, 1999, Conformity Court Decision. EPA has followed this guidance in making this adequacy determination. This guidance is incorporated into EPA's July 1, 2004, final rulemaking entitled "Transportation Conformity Rule Amendments for the New 8-hour Ozone and $PM_{2.5}$ National Ambient Air Quality Standards and Miscellaneous Revisions for Existing Areas; Transportation Conformity Rule Amendments: Response to Court Decision and Additional Rule Changes" (69 FR 40004).

Within 24 months from the effective date of this notice, the transportation partners will need to demonstrate conformity to the new MVEBs, if the demonstration has not already been made, pursuant to 40 CFR 93.104(e). *See,* 73 FR 4419 (January 24, 2008).

Authority: 42 U.S.C. 7401 *et seq.*

Dated: March 17, 2010.

Beverly H. Banister,

Acting Regional Administrator, Region 4.

[FR Doc. 2010–7879 Filed 4–6–10; 8:45 am]

BILLING CODE 6560–50–P

ENVIRONMENTAL PROTECTION AGENCY

[FRL–9134–4]

Agency Information Collection Activities OMB Responses

AGENCY: Environmental Protection Agency (EPA).

ACTION: Notice.

SUMMARY: This document announces the Office of Management and Budget (OMB) responses to Agency Clearance requests, in compliance with the Paperwork Reduction Act (44 U.S.C. 3501 *et. seq.*). An agency may not conduct or sponsor, and a person is not required to respond to, a collection of information unless it displays a currently valid OMB control number. The OMB control numbers for EPA regulations are listed in 40 CFR part 9 and 48 CFR chapter 15.

FOR FURTHER INFORMATION CONTACT: Rick Westlund (202) 566–1682, or e-mail at *westlund.rick@epa.gov* and please refer to the appropriate EPA Information Collection Request (ICR) Number.

SUPPLEMENTARY INFORMATION:

OMB Responses To Agency Clearance Requests

OMB Approvals

EPA ICR Number 2219.03; Tips and Complaints Regarding Environmental Violations (Renewal); was approved on 03/01/2010; OMB Number 2020–0032; expires on 03/31/2013; Approved without change.

EPA ICR Number 2356.02; NESHAP for Chemical Preparations Industry; 40 CFR 63.11579–63.11588; was approved on 03/03/2010; OMB Number 2060–0636; expires on 03/31/2013; Approved without change.

EPA ICR Number 2354.02; NESHAP for Prepared Feeds Manufacturing; 40 CFR part 63, subpart A and 40 CFR part 63, subpart DDDDDDD; was approved on 03/03/2010; OMB Number 2060–0635; expires on 03/31/2013; Approved without change.

EPA ICR Number 1060.15; NSPS for Steel Plants: Electric Arc Furnaces and Argon-Oxygen Decarburization Vessels; 40 CFR part 60, subpart A and 40 CFR part 60, subparts AA and AAa; was approved on 03/08/2010; OMB Number 2060–0038; expires on 03/31/2013; Approved without change.

EPA ICR Number 2308.02; OECD SLAB Revisions (Final Rule); 40 CFR parts 262, 264, 265, 266 and 271, was approved on 03/10/2010; OMB Number 2050–0201; expires on 03/31/2013; Approved without change.

EPA ICR Number 2050.04; NESHAP for Taconite Iron Ore Processing; 40 CFR part 63, subpart A and 40 CFR part 63, subpart RRRRR; was approved on 03/12/2010; OMB Number 2060–0538; expires on 03/31/2013; Approved without change.

EPA ICR Number 1893.05; Emission Guidelines and Compliance Times for Municipal Solid Waste Landfills; 40 CFR part 60, subpart A, 40 CFR part 60, subpart Cc, 40 CFR part 62, subpart GGG; was approved on 03/12/2010; OMB Number 2060–0430; expires on 03/31/2013; Approved without change.

EPA ICR Number 1415.09; NESHAP for Perchlorethylene Dry Cleaning Facilities; 40 CFR part 63, subpart A and 40 CFR part 63, subpart M; was approved on 03/15/2010; OMB Number 2060–0234; expires on 03/31/2013; Approved with change.

EPA ICR Number 1899.06; EG for Hospital/Medical/Infectious Waste Incinerators; 40 CFR part 60, subpart A, 40 CFR part 60, subpart Ce, 40 CFR part 62, subpart HHH; was approved on 03/18/2010; OMB Number 2060–0422; expires on 09/30/2012; Approved with change.

EPA ICR Number 2328.01; Pressed Wood Manufacturing Industry Survey; was approved on 03/25/2010; OMB Number 2070–0177; expires on 03/31/2013; Approved with change.

EPA ICR Number 2380.01; Renewable Fuels Standard Program: Petition and Registration; 40 CFR part 80, subpart M; was approved on 03/26/2010; OMB Number 2060–0637; expires on 03/31/2013; Approved without change.

EPA ICR Number 0595.10; Notice of Pesticide Registration by States to Meet a Special Local Need (SLN) Under FIFRA Section 24(c); 40 CFR part 162, subpart D; 40 CFR 162.153; was approved on 03/26/2010; OMB Number 2070–0055; expires on 03/31/2013; Approved without change.

EPA ICR Number 0795.13; Notification of Chemical Exports—TSCA Section 12(b); 40 CFR part 707, subpart D; was approved on 03/26/2010; OMB Number 2070–0030; expires on 03/31/2013; Approved without change.

EPA ICR Number 2327.02; New Information Collection Activities Related to Electronic Submission of Certain TSCA Section 5 Notices; 40 CFR parts 3, 700, 720, 721, 723 and 725, was approved on 03/29/2010; OMB Number 2070–0173; expires on 03/31/2013; Approved without change.

EPA ICR Number 2343.02; Focus Group Research for Fuel Economy Label Designs for Advanced Technology Vehicles (New Collection); was approved on 03/31/2010; OMB Number 2060–0632; expires on 06/30/2010; Approved with change.

Withdrawn and Continue

EPA ICR Number 2364.01; Affirmative Defence Requirements for Ultra-low Sulfur Diesel; Withdrawn from OMB on 03/16/2010.

Dated: April 1, 2010.

John Moses,

Director, Collections Strategies Division.

[FR Doc. 2010–7873 Filed 4–6–10; 8:45 am]

BILLING CODE 6560–50–P

ENVIRONMENTAL PROTECTION AGENCY

[EPA–HQ–OECA–2009–0527; FRL–9134–5; EPA ICR Number 1066.06; OMB Control Number 2060–0032]

Agency Information Collection Activities; Submission to OMB for Review and Approval; Comment Request; NSPS for Ammonium Sulfate Manufacturing Plants (Renewal)

AGENCY: Environmental Protection Agency (EPA).

ACTION: Notice.

SUMMARY: In compliance with the Paperwork Reduction Act (44 U.S.C. 3501 *et seq.*), this document announces that an Information Collection Request (ICR) has been forwarded to the Office of Management and Budget (OMB) for review and approval. This is a request to renew an existing approved collection. The ICR which is abstracted below describes the nature of the collection and the estimated burden and cost.

DATES: Additional comments may be submitted on or before May 7, 2010.

ADDRESSES: Submit your comments, referencing docket ID number EPA–HQ–OECA–2009–0527, to (1) EPA online using *http://www.regulations.gov* (our preferred method), or by e-mail to *docket.oeca@epa.gov,* or by mail to: EPA Docket Center (EPA/DC), Environmental Protection Agency, Enforcement and Compliance Docket and Information Center, mail code 28221T, 1200 Pennsylvania Avenue, NW., Washington, DC 20460, and (2) OMB at: Office of Information and Regulatory Affairs, Office of Management and Budget (OMB), Attention: Desk Officer for EPA, 725 17th Street, NW., Washington, DC 20503.

FOR FURTHER INFORMATION CONTACT: Robert C. Marshall, Jr., Office of Compliance, Mail Code: 2223A, Environmental Protection Agency, 1200 Pennsylvania Avenue, NW., Washington, DC 20460; telephone number: (202) 564–7021; fax number: (202) 564–0050; e-mail address: *marshall.robert@epa.gov.*

SUPPLEMENTARY INFORMATION: EPA has submitted the following ICR to OMB for review and approval according to the procedures prescribed in 5 CFR 1320.12. On July 30, 2009 (74 FR 38004), EPA sought comments on this ICR pursuant to 5 CFR 1320.8(d). EPA received no comments. Any additional comments on this ICR should be submitted to EPA and OMB within 30 days of this notice.

EPA has established a public docket for this ICR under docket ID number EPA–HQ–OECA–2009–0527, which is available for public viewing online at *http://www.regulations.gov*, in person viewing at the Enforcement and Compliance Docket in the EPA Docket Center (EPA/DC), EPA West, Room 3334, 1301 Constitution Avenue, NW., Washington, DC. The EPA Docket Center Public Reading Room is open from 8:30 a.m. to 4:30 p.m., Monday through Friday, excluding legal holidays. The telephone number for the Reading Room is (202) 566–1744, and the telephone number for the Enforcement and Compliance Docket is (202) 566–1752.

Use EPA's electronic docket and comment system at *http://www.regulations.gov*, to submit or view public comments, access the index listing of the contents of the docket, and to access those documents in the docket that are available electronically. Once in the system, select "docket search," then key in the docket ID number identified above. Please note that EPA's policy is that public comments, whether submitted electronically or in paper, will be made available for public viewing at *http://www.regulations.gov*, as EPA receives them and without change, unless the comment contains copyrighted material, Confidential Business Information (CBI), or other information whose public disclosure is restricted by statute. For further information about the electronic docket, go to *http://www.regulations.gov.*

Title: NSPS for Ammonium Sulfate Manufacturing Plants (Renewal).

ICR Numbers: EPA ICR Number 1066.06, OMB Control Number 2060–0032.

ICR Status: This ICR is scheduled to expire on May 31, 2010. Under OMB regulations, the Agency may continue to conduct or sponsor the collection of information while this submission is pending at OMB. An Agency may not conduct or sponsor, and a person is not required to respond to, a collection of information unless it displays a currently valid OMB control number. The OMB control numbers for EPA's regulations in title 40 of the CFR, after appearing in the **Federal Register** when approved, are listed in 40 CFR part 9, and displayed either by publication in the **Federal Register** or by other appropriate means, such as on the related collection instrument or form, if applicable. The display of OMB control numbers in certain EPA regulations is consolidated in 40 CFR part 9.

Abstract: The New Source Performance Standards (NSPS) for Ammonium Sulfate Manufacturing Plants (40 CFR part 60, subpart PP), were proposed on February 4, 1980, and promulgated on November 12, 1980. Owners or operators of the affected facilities must make an initial notification, performance tests, periodic reports, and maintain records of the occurrence and duration of any startup, shutdown, or malfunction in the operation of an affected facility, or any period during which the monitoring system is inoperative. Reports, at a minimum, are required semiannually.

Burden Statement: The annual public reporting and recordkeeping burden for this collection of information is estimated to average 62 hours per response. Burden means the total time, effort, or financial resources expended by persons to generate, maintain, retain, or disclose or provide information to or for a Federal agency. This includes the time needed to review instructions; develop, acquire, install, and utilize technology and systems for the purposes of collecting, validating, and verifying information, processing and maintaining information, and disclosing and providing information; adjust the existing ways to comply with any previously applicable instructions and requirements which have subsequently changed; train personnel to be able to respond to a collection of information; search data sources; complete and review the collection of information; and transmit or otherwise disclose the information.

Respondents/Affected Entities: Ammonium sulfate manufacturing plants.

Estimated Number of Respondents: 2.

Frequency of Response: Initially, occasionally, and semiannually.

Estimated Total Annual Hour Burden: 247.

Estimated Total Annual Cost: $23,183 in labor costs exclusively. There are neither capital/startup costs nor operation and maintenance (O&M) costs.

Changes in the Estimates: There is an apparent increase of one hour in the total labor hours for this ICR. Total labor hours for this ICR are 247 rather than 246 in the previous ICR, because the previous ICR did not round labor hours up to the nearest whole number. There is no change in the per-respondent labor hours in this ICR compared to the previous ICR. This is due to two considerations: (1) The regulations have not changed over the past three years and are not anticipated to change over the next three years; and (2) the growth rate for the respondents is very low, negative or non-existent. Therefore, the labor hours in the previous ICR reflect the current burden to the respondents and are reiterated (with a correction for rounding) in this ICR.

There is an increase in both Respondent and Agency costs resulting from labor rate increases from 2003 to 2009. This ICR uses 2009 labor rates because burden and cost calculations in Tables 1 and 2 of this ICR were expanded to include managerial and clerical labor rates, and the previous ICR only provided a technical labor rate for 2003. This ICR is therefore updated to present the most recent available labor rates for each of the three labor categories.

Dated: April 1, 2010.

John Moses,

Director, Collection Strategies Division.

[FR Doc. 2010–7877 Filed 4–6–10; 8:45 am]

BILLING CODE 6560–50–P

ENVIRONMENTAL PROTECTION AGENCY

[EPA–HQ–OPP–2009–0979; FRL–8820–1]

Malathion and Diquat Dibromide; Cancellation Order for Amendments to Terminate Uses

AGENCY: Environmental Protection Agency (EPA).

ACTION: Notice.

SUMMARY: This notice announces EPA's order for the amendments to terminate uses, voluntarily requested by the registrants and accepted by the Agency, of uses of the products listed in Table 1, pursuant to section 6(f)(1) of the Federal Insecticide, Fungicide, and Rodenticide Act (FIFRA), as amended. This cancellation order follows a February 10, 2010 **Federal Register** Notice of Receipt of Requests from the registrants listed in Table 2 to voluntarily amend to terminate certain uses of these product registrations. These are not the last products containing these pesticides registered for use in the United States. In the February 10, 2010 Notice, EPA indicated that it would issue an order implementing the amendments to terminate uses, unless the Agency received substantive comments within the 30–day comment period that would merit its further review of these requests, or unless the registrants withdrew their requests within this period. The Agency received one comment on the notice, but this comment did not merit the Agency's further review of the requests. Further, the registrants did not withdraw their requests. Accordingly, EPA hereby issues in this notice a cancellation order granting the requested amendments to terminate uses. Any distribution, sale, or use of the products subject to this cancellation order is permitted only in accordance with the terms of this order, including any existing stocks provisions.

DATES: The cancellations are effective April 7, 2010.

FOR FURTHER INFORMATION CONTACT: Eric Miederhoff, Pesticide Re-evaluation Division, Office of Pesticide Programs, Environmental Protection Agency, 1200 Pennsylvania Ave., NW., Washington, DC 20460–0001; telephone number: (703) 347–8028; fax number: (703) 308–7070; e-mail address: *miederhoff.eric@epa.gov*.

SUPPLEMENTARY INFORMATION:

I. General Information

A. Does this Action Apply to Me?

This action is directed to the public in general, and may be of interest to a wide range of stakeholders including environmental, human health, and agricultural advocates; the chemical industry; pesticide users; and members of the public interested in the sale, distribution, or use of pesticides. Since others also may be interested, the Agency has not attempted to describe all the specific entities that may be affected by this action. If you have any questions regarding the applicability of this action to a particular entity, consult the person listed under **FOR FURTHER INFORMATION CONTACT.**

B. How Can I Get Copies of this Document and Other Related Information?

EPA has established a docket for this action under docket identification (ID) number EPA–HQ–OPP–2009–0979. Publicly available docket materials are available either in the electronic docket at *http://www.regulations.gov*, or, if only available in hard copy, at the Office of Pesticide Programs (OPP) Regulatory Public Docket in Rm. S–4400, One Potomac Yard (South Bldg.), 2777 S. Crystal Dr., Arlington, VA. The hours of operation of this Docket Facility are from 8:30 a.m. to 4 p.m., Monday through Friday, excluding legal holidays. The Docket Facility telephone number is (703) 305–5805.

II. What Action is the Agency Taking?

This notice announces the amendments to terminate uses, as requested by registrants, for products registered under section 3 of FIFRA. These registrations are listed in sequence by registration number in Table 1 of this unit.

TABLE 1.— AMENDED PRODUCT REGISTRATIONS

EPA Registration No.	Product Name	Active Ingredient	Delete from Label
100–1061	Reglone Desiccant Herbicide	Diquat dibromide	Sorghum (seed crop only) Soybean (seed crop only)
4787–46	Atrapa® 8E	Malathion	Animal premise and barns used for dairy and livestock
67760–40	Fyfanon® 57% EC	Malathion	Animal premise and barns used for dairy and livestock

Table 2 of this unit includes the names and addresses of record for all registrants of the products in Table 1 of this unit, in sequence by EPA company number.

TABLE 2.—REGISTRANTS OF AMENDED PRODUCTS

EPA Company Number	Company Name and Address
100	Syngenta Crop Protection, Inc. P.O. Box 18300 Greensboro, NC 27419–8300
4787	Cheminova, A/S P.O. Box 110566 One Park Drive, Suite 150 Research Triangle Park, NC 27709
67760	Cheminova, Inc. Washington Office 1600 Wilson Boulevard Suite 700 Arlington, VA 22209

III. Summary of Public Comments Received and Agency Response to Comments

During the public comment period provided, EPA received one comment in response to the February 10, 2010 **Federal Register** notice announcing the Agency's receipt of the requests for voluntary amendments to terminate uses of products listed in Table 1 of Unit II.

The commenter, Stephen A. McFadden, stated that organophosphate insecticides (OP) as a class are too neurotoxic to be used safely in high human exposure applications, such as indoor uses, urban aerial spray programs, and uses that result in high residual levels in foods. McFadden suggested that high levels of exposure to cholinesterase inhibitors such as OP insecticides – may cause a state of permanent hypersensitivity to cholinesterase inhibitors. Nonetheless, the commenter supported the Agency's implementation of the voluntary use termination requests for malathion, an organophosphate insecticide.

The amendments to terminate uses that McFadden commented on were not risk-based actions resulting from an Agency risk assessment, but were voluntarily requested by the registrant. However, McFadden's comment suggests that organophosphate insecticides such as malathion are too toxic for uses other than those included in this cancellation action. Malathion is currently undergoing Registration Review. During this process, the Agency intends to review and revise its existing risk assessments for malathion. The Agency will consider McFadden's comment as the human health risk assessment for malathion is revised.

For these reasons, the Agency does not believe that the comment submitted during the comment period merit further review or a denial of the requests for voluntary use termination.

IV. Cancellation Order

Pursuant to FIFRA section 6(f), EPA hereby approves the requested amendments to terminate uses of malathion and diquat dibromide registrations identified in Table 1 of Unit II. Accordingly, the Agency orders that the product registrations identified in Table 1 of Unit II. are hereby amended to terminate the affected uses. Any distribution, sale, or use of existing stocks of the products identified in Table 1 of Unit II. in a manner inconsistent with any of the Provisions for Disposition of Existing Stocks set forth in Unit VI. will be considered a violation of FIFRA.

V. What is the Agency's Authority for Taking this Action?

Section 6(f)(1) of FIFRA provides that a registrant of a pesticide product may at any time request that any of its pesticide registrations be canceled or amended to terminate one or more uses. FIFRA further provides that, before acting on the request, EPA must publish a notice of receipt of any such request in the **Federal Register**. Thereafter, following the public comment period, the Administrator may approve such a request.

VI. Provisions for Disposition of Existing Stocks

Existing stocks are those stocks of registered pesticide products which are currently in the United States and which were packaged, labeled, and released for shipment prior to the effective date of the cancellation action. The effective date of the amendments to terminate uses is April 7, 2010. The cancellation order that is the subject of this notice includes the following existing stock provisions:

The registrant may sell and distribute existing stocks of products listed in Table 1 of Unit II. under the previously approved labeling which includes the deleted uses until April 7, 2011. Persons other than the registrant may sell and distribute existing stocks of products listed in Table 1 of Unit II. whose labels include the deleted uses until exhausted. Use of the products whose labels include the deleted uses listed in Table 1 of Unit II. may continue until existing stocks are exhausted, provided that such use is consistent with the terms of the previously approved labeling on, or that accompanied, the products.

List of Subjects

Environmental protection, Pesticides and pests.

Dated: March 26, 2010.

Richard P. Keigwin, Jr.,

Director, Pesticide Re-evaluation Division, Office of Pesticide Programs.

[FR Doc. 2010–7505 Filed 4–6–10; 8:45 am]

BILLING CODE 6560–50–S

ENVIRONMENTAL PROTECTION AGENCY

[EPA–HQ–OPP–2010–0178; FRL–8818–3]

Spirotetramat; Receipt of Applications for Emergency Exemptions; Solicitation of Public Comment

AGENCY: Environmental Protection Agency (EPA).

ACTION: Notice.

SUMMARY: EPA has received specific exemption requests from the States of Ohio, New Mexico, and Wisconsin to use the pesticide spirotetramat (CAS No. 203313-25-1) to treat onion, dry bulb to control thrips. The applicants are proposing the use of a chemical whose registration was recently vacated. EPA is soliciting public comment before making the decision whether or not to grant the exemptions.

DATES: Comments must be received on or before April 22, 2010.

ADDRESSES: Submit your comments, identified by docket identification (ID) number EPA–HQ–OPP–2010–0178 by one of the following methods:

- *Federal eRulemaking Portal*: *http://www.regulations.gov*. Follow the on-line instructions for submitting comments.
- *Mail*: Office of Pesticide Programs (OPP) Regulatory Public Docket (7502P), Environmental Protection Agency, 1200 Pennsylvania Ave., NW., Washington, DC 20460–0001.
- *Delivery*: OPP Regulatory Public Docket (7502P), Environmental Protection Agency, Rm. S–4400, One Potomac Yard (South Bldg.), 2777 S. Crystal Dr., Arlington, VA. Deliveries are only accepted during the Docket Facility's normal hours of operation (8:30 a.m. to 4 p.m., Monday through Friday, excluding legal holidays). Special arrangements should be made for deliveries of boxed information. The

Docket Facility telephone number is (703) 305–5805.

Instructions: Direct your comments to docket ID number EPA–HQ–OPP–2010–0178. EPA's policy is that all comments received will be included in the docket without change and may be made available on-line at *http://www.regulations.gov*, including any personal information provided, unless the comment includes information claimed to be Confidential Business Information (CBI) or other information whose disclosure is restricted by statute. Do not submit information that you consider to be CBI or otherwise protected through regulations.gov or e-mail. The regulations.gov website is an "anonymous access" system, which means EPA will not know your identity or contact information unless you provide it in the body of your comment. If you send an e-mail comment directly to EPA without going through regulations.gov, your e-mail address will be automatically captured and included as part of the comment that is placed in the docket and made available on the Internet. If you submit an electronic comment, EPA recommends that you include your name and other contact information in the body of your comment and with any disk or CD-ROM you submit. If EPA cannot read your comment due to technical difficulties and cannot contact you for clarification, EPA may not be able to consider your comment. Electronic files should avoid the use of special characters, any form of encryption, and be free of any defects or viruses.

Docket: All documents in the docket are listed in the docket index available at *http://www.regulations.gov*. Although listed in the index, some information is not publicly available, e.g., CBI or other information whose disclosure is restricted by statute. Certain other material, such as copyrighted material, is not placed on the Internet and will be publicly available only in hard copy form. Publicly available docket materials are available either in the electronic docket at *http://www.regulations.gov*, or, if only available in hard copy, at the OPP Regulatory Public Docket in Rm. S–4400, One Potomac Yard (South Bldg.), 2777 S. Crystal Dr., Arlington, VA. The hours of operation of this Docket Facility are from 8:30 a.m. to 4 p.m., Monday through Friday, excluding legal holidays. The Docket Facility telephone number is (703) 305–5805.

FOR FURTHER INFORMATION CONTACT: Keri Grinstead, Registration Division (7505P), Office of Pesticide Programs, Environmental Protection Agency, 1200 Pennsylvania Ave., NW., Washington, DC 20460–0001; telephone number: (703) 308–8373; fax number: (703) 605–0781; e-mail address:*grinstead.keri@epa.gov*.

SUPPLEMENTARY INFORMATION:

I. General Information

A. Does this Action Apply to Me?

You may be potentially affected by this action if you are an agricultural producer, food manufacturer, or pesticide manufacturer. Potentially affected entities may include, but are not limited to:

- Crop production (NAICS code 111).
- Animal production (NAICS code 112).
- Food manufacturing (NAICS code 311).
- Pesticide manufacturing (NAICS code 32532).

This listing is not intended to be exhaustive, but rather provides a guide for readers regarding entities likely to be affected by this action. Other types of entities not listed in this unit could also be affected. The North American Industrial Classification System (NAICS) codes have been provided to assist you and others in determining whether this action might apply to certain entities. If you have any questions regarding the applicability of this action to a particular entity, consult the person listed under **FOR FURTHER INFORMATION CONTACT**.

B. What Should I Consider as I Prepare My Comments for EPA?

1. *Submitting CBI*. Do not submit this information to EPA through www.regulations.gov or e-mail. Clearly mark the part or all of the information that you claim to be CBI. For CBI information in a disk or CD-ROM that you mail to EPA, mark the outside of the disk or CD-ROM as CBI and then identify electronically within the disk or CD-ROM the specific information that is claimed as CBI. In addition to one complete version of the comment that includes information claimed as CBI, a copy of the comment that does not contain the information claimed as CBI must be submitted for inclusion in the public docket. Information so marked will not be disclosed except in accordance with procedures set forth in 40 CFR part 2.

2. *Tips for preparing your comments*. When submitting comments, remember to:

i. Identify the document by docket ID number and other identifying information (subject heading, **Federal Register** date and page number).

ii. Follow directions. The Agency may ask you to respond to specific questions or organize comments by referencing a Code of Federal Regulations (CFR) part or section number.

iii. Explain why you agree or disagree; suggest alternatives and substitute language for your requested changes.

iv. Describe any assumptions and provide any technical information and/or data that you used.

v. If you estimate potential costs or burdens, explain how you arrived at your estimate in sufficient detail to allow for it to be reproduced.

vi. Provide specific examples to illustrate your concerns and suggest alternatives.

vii. Explain your views as clearly as possible, avoiding the use of profanity or personal threats.

viii. Make sure to submit your comments by the comment period deadline identified.

3. *Environmental justice*. EPA seeks to achieve environmental justice, the fair treatment and meaningful involvement of any group, including minority and/or low income populations, in the development, implementation, and enforcement of environmental laws, regulations, and policies. To help address potential environmental justice issues, the Agency seeks information on any groups or segments of the population who, as a result of their location, cultural practices, or other factors, may have atypical or disproportionately high and adverse human health impacts or environmental effects from exposure to the pesticide(s) discussed in this document, compared to the general population.

II. What Action is the Agency Taking?

Under section 18 of the Federal Insecticide, Fungicide, and Rodenticide Act (FIFRA) (7 U.S.C. 136p), at the discretion of the Administrator, a Federal or State agency may be exempted from any provision of FIFRA if the Administrator determines that emergency conditions exist which require the exemption. Ohio, New Mexico and Wisconsin have requested that the Administrator issue specific exemptions for the use of spirotetramat (CAS No. 203313-25-1) on onion, dry bulb, to control thrips. Information in accordance with 40 CFR part 166 was submitted as part of these requests, and is available for review at *www.regulations.gov* under Docket ID Number 2010-0178.

In 2009, all of the applicants submitted first-time exemption requests for the use of spirotetramat on dry bulb onions to control thrips. Based on the information provided in those 2009

applications, the Agency concurred with the applicants that spirotetramat was necessary to ensure thrips control in areas experiencing thrips resistance to available alternatives and, in particular, where 6 to 8 seasonal applications of alternative pesticides are required to achieve adequate control. Thrips are sucking insects and growers are concerned about managing them because their feeding behavior directly damages the crop and also vectors a plant disease known as Iris Yellow Spot Virus. At this time, managing the disease vector thrips is the growers' main strategy for controlling Iris Yellow Spot Virus. The Agency has confirmed this as an urgent, non-routine situation with potential for significant economic losses requiring the use of spirotetramat. As part of their 2010 recertification requests, the applicants assert that the emergency conditions described in their 2009 applications continue to exist. EPA will review the applications and other available data. The 2009 and 2010 application packages for each state are available for review at *www.regulations.gov* under Docket ID Number 2010–0178. Summary use information for each state is listed below:

1. *Ohio.* The Ohio Department of Agriculture proposes to make no more than two applications of Movento (which contains 22.4% spirotetramat) on a maximum of 400 acres of onion, dry bulb between July 1 and September 15, 2010 in Ohio.

2. *New Mexico.* The New Mexico Department of Agriculture proposes to make no more than two applications of Movento on a maximum of 6,000 acres of onion, dry bulb between May and October, 2010 in the New Mexico counties of Chaves, Curry, Dona Ana, Eddy, Hidalgo, Lea, Luna, Farmington, Roosevelt, and Sierra.

3. *Wisconsin.* The Wisconsin Department of Agriculture, Trade and Consumer Protection proposes to make no more than two applications of Movento on a maximum of 2,200 acres of onion, dry bulb between June 1 and September 15, 2010 in the Wisconsin counties of Columbia, Dodge, Green Lake, Jefferson, Kenosha, Marquette, Portage, Racine, Rock, Walworth, Waukasha, Waupaca, and Waushara.

This notice does not constitute a decision by EPA on the applications themselves, but provides an opportunity for public comment on the applications. EPA has determined that publication of a notice of receipt of these applications for specific exemptions is appropriate taking into consideration the December 23, 2009 decision of the U.S. District Court for the Southern District of New York vacating the registration of the spirotetramat product that is the subject of these emergency exemption requests. This vacatur is available for review at *www.regulations.gov* under Docket ID Number 2010–0178.

The Agency will review and consider all comments received during the comment period in determining whether to issue the specific exemptions requested by the states of Ohio, New Mexico, and Wisconsin.

List of Subjects

Environmental protection, Pesticides and pests.

Dated: March 25, 2010.

Lois Rossi,

Director, Registration Division, Office of Pesticide Programs.

[FR Doc. 2010–7620 Filed 4–6–10; 8:45 a.m.]

BILLING CODE 6560–50–S

ENVIRONMENTAL PROTECTION AGENCY

[EPA–HQ–OPP–2010–0048; FRL–8810–7]

Notice of Receipt of a Pesticide Petition Filed for Temporary Tolerance Exemption for Residues of Prohydrojasmon on Red Apple Varieties

AGENCY: Environmental Protection Agency (EPA).

ACTION: Notice.

SUMMARY: This notice announces the Agency's receipt of an initial filing of a petition requesting a temporary exemption from the requirement of a tolerance for residues of pesticide chemicals in or on various commodities. This temporary tolerance exemption is for the use of prohydrojasmon (PDJ) on red apples varieties in the state of California, Maryland, Michigan, New York, North Carolina, Oregon, Pennsylvania, Virginia, Washington, and West Virginia. PDJ is intended for use as a plant growth regulator.

DATES: Comments must be received on or before May 7, 2010.

ADDRESSES: Submit your comments, identified by docket identification (ID) number EPA–HQ–OPP–2010–0048 and the pesticide petition number (PP) *9G7656*, by one of the following methods:

• *Federal eRulemaking Portal*: *http://www.regulations.gov*. Follow the on-line instructions for submitting comments.

• *Mail*: Office of Pesticide Programs (OPP) Regulatory Public Docket (7502P), Environmental Protection Agency, 1200 Pennsylvania Ave., NW., Washington, DC 20460–0001.

• *Delivery*: OPP Regulatory Public Docket (7502P), Environmental Protection Agency, Rm. S–4400, One Potomac Yard (South Bldg.), 2777 S. Crystal Dr., Arlington, VA. Deliveries are only accepted during the Docket Facility's normal hours of operation (8:30 a.m. to 4 p.m., Monday through Friday, excluding legal holidays). Special arrangements should be made for deliveries of boxed information. The Docket Facility telephone number is (703) 305–5805.

Instructions: Direct your comments to docket ID number EPA–HQ–OPP–2010–0048 and the pesticide petition number (PP) *9G7656*. EPA's policy is that all comments received will be included in the docket without change and may be made available on-line at *http://www.regulations.gov*, including any personal information provided, unless the comment includes information claimed to be Confidential Business Information (CBI) or other information whose disclosure is restricted by statute. Do not submit information that you consider to be CBI or otherwise protected through regulations.gov or e-mail. The regulations.gov website is an "anonymous access" system, which means EPA will not know your identity or contact information unless you provide it in the body of your comment. If you send an e-mail comment directly to EPA without going through regulations.gov, your e-mail address will be automatically captured and included as part of the comment that is placed in the docket and made available on the Internet. If you submit an electronic comment, EPA recommends that you include your name and other contact information in the body of your comment and with any disk or CD-ROM you submit. If EPA cannot read your comment due to technical difficulties and cannot contact you for clarification, EPA may not be able to consider your comment. Electronic files should avoid the use of special characters, any form of encryption, and be free of any defects or viruses.

Docket: All documents in the docket are listed in the docket index available at *http://www.regulations.gov*. Although listed in the index, some information is not publicly available, e.g., CBI or other information whose disclosure is restricted by statute. Certain other material, such as copyrighted material, is not placed on the Internet and will be publicly available only in hard copy form. Publicly available docket materials are available either in the electronic docket at *http://www.regulations.gov*, or, if only available in hard copy, at the OPP Regulatory Public Docket in Rm. S–

4400, One Potomac Yard (South Bldg.), 2777 S. Crystal Dr., Arlington, VA. The hours of operation of this Docket Facility are from 8:30 a.m. to 4 p.m., Monday through Friday, excluding legal holidays. The Docket Facility telephone number is (703) 305–5805.

FOR FURTHER INFORMATION CONTACT: Gina Casciano, Biopesticides and Pollution Prevention Division (7511P), Office of Pesticide Programs, Environmental Protection Agency, 1200 Pennsylvania Ave., NW., Washington, DC 20460–0001; telephone number: (703) 605–0513; e-mail address: *casciano.gina@epa.gov*.

SUPPLEMENTARY INFORMATION:

I. General Information

A. Does this Action Apply to Me?

You may be potentially affected by this action if you are an agricultural producer, food manufacturer, or pesticide manufacturer. Potentially affected entities may include, but are not limited to:

- Crop production (NAICS code 111).
- Animal production (NAICS code 112).
- Food manufacturing (NAICS code 311).
- Pesticide manufacturing (NAICS code 32532).

This listing is not intended to be exhaustive, but rather provides a guide for readers regarding entities likely to be affected by this action. Other types of entities not listed in this unit could also be affected. The North American Industrial Classification System (NAICS) codes have been provided to assist you and others in determining whether this action might apply to certain entities. If you have any questions regarding the applicability of this action to a particular entity, consult the person listed under **FOR FURTHER INFORMATION CONTACT.**

B. What Should I Consider as I Prepare My Comments for EPA?

1. *Submitting CBI*. Do not submit this information to EPA through regulations.gov or e-mail. Clearly mark the part or all of the information that you claim to be CBI. For CBI information in a disk or CD-ROM that you mail to EPA, mark the outside of the disk or CD-ROM as CBI and then identify electronically within the disk or CD-ROM the specific information that is claimed as CBI. In addition to one complete version of the comment that includes information claimed as CBI, a copy of the comment that does not contain the information claimed as CBI must be submitted for inclusion in the public docket. Information so marked will not be disclosed except in accordance with procedures set forth in 40 CFR part 2.

2. *Tips for preparing your comments*. When submitting comments, remember to:

i. Identify the document by docket ID number and other identifying information (subject heading, **Federal Register** date and page number).

ii. Follow directions. The Agency may ask you to respond to specific questions or organize comments by referencing a Code of Federal Regulations (CFR) part or section number.

iii. Explain why you agree or disagree; suggest alternatives and substitute language for your requested changes.

iv. Describe any assumptions and provide any technical information and/or data that you used.

v. If you estimate potential costs or burdens, explain how you arrived at your estimate in sufficient detail to allow for it to be reproduced.

vi. Provide specific examples to illustrate your concerns and suggest alternatives.

vii. Explain your views as clearly as possible, avoiding the use of profanity or personal threats.

viii. Make sure to submit your comments by the comment period deadline identified.

3. *Environmental justice*. EPA seeks to achieve environmental justice, the fair treatment and meaningful involvement of any group, including minority and/or low-income populations, in the development, implementation, and enforcement of environmental laws, regulations, and policies. To help address potential environmental justice issues, the Agency seeks information on any groups or segments of the population who, as a result of their location, cultural practices, or other factors, may have a typical or disproportionately high and adverse human health impacts or environmental effects from exposure to the pesticides discussed in this document, compared to the general population.

II. What Action is the Agency Taking?

EPA is announcing receipt of a pesticide petition filed under section 408 of the Federal Food, Drug, and Cosmetic Act (FFDCA), 21 U.S.C. 346a, proposing the establishment or modification of regulations in 40 CFR part 174 or part 180 for residues of the pesticide chemical prohydrojasmon (PDJ) in or on various food commodities. EPA has determined that the pesticide petition described in this notice contains data or information prescribed in FFDCA section 408(d)(2); however, EPA has not fully evaluated the sufficiency of the submitted data at this time or whether the data supports granting of the pesticide petition. Additional data may be needed before EPA can make a final determination on this pesticide petition.

In accordance with 40 CFR 180.7(f), a summary of the petition that is the subject of this notice, prepared by the petitioner, is included in a docket EPA has created for this rulemaking. The docket for this petition is available on-line at *http://www.regulations.gov*.

As specified in FFDCA section 408(d)(3), (21 U.S.C. 346a(d)(3)), EPA is publishing a notice of the petition so that the public has an opportunity to comment on this request for the establishment or modification of regulations for residues of pesticides in or on food commodities. Further information on the petition may be obtained through the petition summary referenced in this unit.

Exemption from the Requirement of a Tolerance

PP 9G7656. Fine Agrochemicals, Ltd., c/o SciReg, Inc., 12733 Director's Loop, Woodbridge, VA 22192, proposes establishment of a temporary tolerance exemption for residues of the plant growth regulator, prohydrojasmon (PDJ), in or on red apple varieties. The petitioner believes no analytical method is needed because this is an exemption from the requirement of a tolerance without any numerical limitation.

List of Subjects

Environmental protection, Agricultural commodities, Feed additives, Food additives, Pesticides and pests, Reporting and recordkeeping requirements.

Dated: March 30, 2010.

Keith A. Matthews,

Acting Director, Biopesticides and Pollution Prevention Division, Office of Pesticide Programs.

[FR Doc. 2010–7754 Filed 4–6–10; 8:45 am]

BILLING CODE 6560–50–S

ENVIRONMENTAL PROTECTION AGENCY

[EPA–HQ–OPP–2010-0209; FRL–8817–7]

Notice of Receipt of Requests to Voluntarily Cancel Certain Pesticide Registrations

AGENCY: Environmental Protection Agency (EPA).

ACTION: Notice.

SUMMARY: In accordance with section 6(f)(1) of the Federal Insecticide,

Fungicide, and Rodenticide Act (FIFRA), as amended, EPA is issuing a notice of receipt of request by registrants to voluntarily cancel certain pesticide registrations.

DATES: Unless a request is withdrawn by October 4, 2010 or May 7, 2010 for registrations for which the registrant requested a waiver of the 180–day comment period, orders will be issued canceling these registrations. The Agency will consider withdrawal requests postmarked no later than October 4, 2010 or May 7, 2010, whichever is applicable. Comments must be received on or before October 4, 2010 or May 7, 2010, for those registrations where the 180–day comment period has been waived.

ADDRESSES: Submit your comments and your withdrawal request, identified by docket identification (ID) number EPA–HQ–OPP–2010-0209, by one of the following methods:

• *Federal eRulemaking Portal*: *http://www.regulations.gov*. Follow the on-line instructions for submitting comments.

• *Mail*: Office of Pesticide Programs (OPP) Regulatory Public Docket (7502P), Environmental Protection Agency, 1200 Pennsylvania Ave., NW., Washington, DC 20460–0001. Written Withdrawal Request, Attention : John Jamula, Information Technology and Resources Management Division (7502P).

• *Delivery*: OPP Regulatory Public Docket (7502P), Environmental Protection Agency, Rm. S–4400, One Potomac Yard (South Bldg.), 2777 S. Crystal Dr., Arlington, VA. Deliveries are only accepted during the Docket Facility's normal hours of operation (8:30 a.m. to 4 p.m., Monday through Friday, excluding legal holidays). Special arrangements should be made for deliveries of boxed information. The Docket Facility telephone number is (703) 305–5805.

Instructions: Direct your comments to docket ID number EPA–HQ–OPP–2010-0209. EPA's policy is that all comments received will be included in the docket without change and may be made available on-line at *http://www.regulations.gov*, including any personal information provided, unless the comment includes information claimed to be Confidential Business Information (CBI) or other information whose disclosure is restricted by statute. Do not submit information that you consider to be CBI or otherwise protected through regulations.gov or e-mail. The regulations.gov website is an "anonymous access" system, which means EPA will not know your identity or contact information unless you provide it in the body of your comment. If you send an e-mail comment directly to EPA without going through regulations.gov, your e-mail address will be automatically captured and included as part of the comment that is placed in the docket and made available on the Internet. If you submit an electronic comment, EPA recommends that you include your name and other contact information in the body of your comment and with any disk or CD-ROM you submit. If EPA cannot read your comment due to technical difficulties and cannot contact you for clarification, EPA may not be able to consider your comment. Electronic files should avoid the use of special characters, any form of encryption, and be free of any defects or viruses.

Docket: All documents in the docket are listed in the docket index available at *http://www.regulations.gov*. Although listed in the index, some information is not publicly available, e.g., CBI or other information whose disclosure is restricted by statute. Certain other material, such as copyrighted material, is not placed on the Internet and will be publicly available only in hard copy form. Publicly available docket materials are available either in the electronic docket at *http://www.regulations.gov*, or, if only available in hard copy, at the OPP Regulatory Public Docket in Rm. S–4400, One Potomac Yard (South Bldg.), 2777 S. Crystal Dr., Arlington, VA. The hours of operation of this Docket Facility are from 8:30 a.m. to 4 p.m., Monday through Friday, excluding legal holidays. The Docket Facility telephone number is (703) 305–5805.

FOR FURTHER INFORMATION CONTACT: John Jamula, Information Technology and Resources Management Division (7502P), Office of Pesticide Programs, Environmental Protection Agency, 1200 Pennsylvania Ave., NW., Washington, DC 20460–0001; telephone number: (703) 305-6426; e-mail address: *jamula.john@epa.gov*.

SUPPLEMENTARY INFORMATION:

I. General Information

A. Does this Action Apply to Me?

This action is directed to the public in general. Although this action may be of particular interest to persons who produce or use pesticides, the Agency has not attempted to describe all the specific entities that may be affected by this action. If you have any questions regarding the information in this notice, consult the person listed under **FOR FURTHER INFORMATION CONTACT**.

B. What Should I Consider as I Prepare My Comments for EPA?

1. *Submitting CBI*. Do not submit this information to EPA through regulations.gov or e-mail. Clearly mark the part or all of the information that you claim to be CBI. For CBI information in a disk or CD-ROM that you mail to EPA, mark the outside of the disk or CD-ROM as CBI and then identify electronically within the disk or CD-ROM the specific information that is claimed as CBI. In addition to one complete version of the comment that includes information claimed as CBI, a copy of the comment that does not contain the information claimed as CBI must be submitted for inclusion in the public docket. Information so marked will not be disclosed except in accordance with procedures set forth in 40 CFR part 2.

2. *Tips for preparing your comments*. When submitting comments, remember to:

i. Identify the document by docket ID number and other identifying information (subject heading, **Federal Register** date and page number).

ii. Follow directions. The Agency may ask you to respond to specific questions or organize comments by referencing a Code of Federal Regulations (CFR) part or section number.

iii. Explain why you agree or disagree; suggest alternatives and substitute language for your requested changes.

iv. Describe any assumptions and provide any technical information and/or data that you used.

v. If you estimate potential costs or burdens, explain how you arrived at your estimate in sufficient detail to allow for it to be reproduced.

vi. Provide specific examples to illustrate your concerns and suggest alternatives.

vii. Explain your views as clearly as possible, avoiding the use of profanity or personal threats.

viii. Make sure to submit your comments by the comment period deadline identified.

II. What Action is the Agency Taking?

This notice announces receipt by the Agency of applications from registrants to cancel 345 pesticide products registered under section 3 or 24(c) of FIFRA. These registrations are listed in sequence by registration number (or company number and 24(c) number) in Table 1 of this unit:

TABLE 1.—REGISTRATIONS WITH PENDING REQUESTS FOR CANCELLATION

Registration no.	Product Name	Chemical Name
000004–00017	Rotenone 1.0% Dust	Rotenone
000070–00269	Rigo Neat'n Clean Extra Strength Systemic Weed + Grass	Glyphosate-isopropylammonium
000070–00284	Rigo Neat'n Clean Concentrate Systemic Weed and Grass	Glyphosate-isopropylammonium
000100–00530	Methidathion Technical	Methidathion
000100 AR–03–0009	Fusilade Dx Herbicide	Propanoic acid, 2-(4-((5-(trifluoromethyl)-2-pyridinyl)oxy)phenoxy)-, butyl ester, (R)-
000100 AZ–96–0010	Mefenoxam EC	D-Alanine, N-(2,6-dimethylphenyl)-N-(methoxyacetyl)-, methyl ester
000100 CA–01–0016	Ridomil Gold EC	D-Alanine, N-(2,6-dimethylphenyl)-N-(methoxyacetyl)-, methyl ester
000100 CA–04–0009	Ordram 8-E Selective Herbicide	Molinate
000100 CA–04–0010	Ordram 8-E Selective Herbicide	Molinate
000100 CA–04–0011	Ordram 8-E Selective Herbicide	Molinate
000100 CA–05–0013	Scholar Fungicide	Fludioxonil
000100 CA–07–0004	Ridomil Gold SI	D-Alanine, N-(2,6-dimethylphenyl)-N-(methoxyacetyl)-, methyl ester
000100 CA–96–0011	Mefenoxam EC	D-Alanine, N-(2,6-dimethylphenyl)-N-(methoxyacetyl)-, methyl ester
000100 DE–03–0006	Ridomil Gold/copper	Copper hydroxide
		D-Alanine, N-(2,6-dimethylphenyl)-N-(methoxyacetyl)-, methyl ester
000100 GA–03–0002	Dual Magnum Herbicide	S-Metolachlor
000100 ID–02–0028	Warrior Insecticide with Zeon Technology	lambda-Cyhalothrin
000100 ID–06–0021	Discover NG Herbicide	Clodinafop-propargyl (CAS Reg. No.105512-06-9)
000100 IL–04–0001	Dual Magnum Herbicide	S-Metolachlor
000100 KY–09–0028	Quadris Flowable Fungicide	Azoxystrobin
000100 LA–07–0005	Endigo ZC	Thiamethoxam
		lambda-Cyhalothrin
000100 LA–98–0007	Fusilade DX Herbicide	Propanoic acid, 2-(4-((5-(trifluoromethyl)-2-pyridinyl)oxy)phenoxy)-, butyl ester, (R)-
000100 MA–99–0002	Dual Magnum Herbicide	S-Metolachlor
000100 MO–08–0005	Callisto	Mesotrione
000100 MO–09–0005	Callisto Herbicide	Mesotrione
000100 MS–07–0003	Endigo ZC	Thiamethoxam
		lambda-Cyhalothrin
000100 MS–95–0012	Fusilade DX Herbicide	Propanoic acid, 2-(4-((5-(trifluoromethyl)-2-pyridinyl)oxy)phenoxy)-, butyl ester, (R)-
000100 ND–03–0010	Warrior Insecticide with Zeon Technology	lambda-Cyhalothrin
000100 OR–03–0002	Warrior Insecticide with Zeon Technology	lambda-Cyhalothrin
000100 OR–06–0025	Discover NG Herbicide	Clodinafop-propargyl (CAS Reg. No.105512-06-9)
000100 PR–04–0005	Tilt 41.8% Fungicide	Propiconazole
000100 SD–08–0002	Callisto Herbicide	Mesotrione

TABLE 1.—REGISTRATIONS WITH PENDING REQUESTS FOR CANCELLATION—Continued

Registration no.	Product Name	Chemical Name
000100 SD–09–0004	Callisto	Mesotrione
000100 TX–01–0008	Ridomil Gold EC	D-Alanine, N-(2,6-dimethylphenyl)-N-(methoxyacetyl)-, methyl ester
000100 TX–03–0012	Quadris	Azoxystrobin
000100 TX–04–0004	Ordram 8-E AN Emulsifiable Liquid Herbicide	Molinate
000100 TX–04–0010	Dual Magnum Herbicide	S-Metolachlor
000100 UT–07–0002	Discover NG Herbicide	Clodinafop-propargyl (CAS Reg. No.105512-06-9)
000100 WA–06–0024	Discover NG Herbicide	Clodinafop-propargyl (CAS Reg. No.105512-06-9)
000100 WA–07–0012	Ridomil Gold SL	D-Alanine, N-(2,6-dimethylphenyl)-N-(methoxyacetyl)-, methyl ester
000100 WY–06–0006	Discover NG Herbicide	Clodinafop-propargyl (CAS Reg. No.105512-06-9)
000192–00135	Dexol Weedsol Non Selective Weed and Grass Killer	Prometon
000192–00177	Dexol Weed &Grass Killer	Diquat dibromide
000192–00178	Dexol Weed &Grass Killer Concentrate	Diquat dibromide
000192–00182	Dexol Dog &Cat Repellent	Methyl nonyl ketone
000192–00184	Dexol Hornet &Wasp Killer II	Phenothrin
		Tetramethrin
000192–00189	Dexol Flying &Crawling Insect Killer II	Tetramethrin
		Phenothrin
000192–00196	Dexel Flea Free Carpet Spray	Pyriproxyfen
		Tetramethrin
		Phenothrin
000228–00636	Imida E-AG 5 F ST Insecticide	Imidacloprid
000228–00656	ETI 105 28 I	Imidacloprid
000228–00668	Imida E-Pro 4 F Pre/post Construction Insecticide	Imidacloprid
000228–00682	ETI 105 12 I	Imidacloprid
000228–00691	Imida E-Pro 0.5 -- Turf Insecticide	Imidacloprid
000228–00692	Imida E-Pro 1% G -- ORN Insecticide	Imidacloprid
000228–00693	Imida E-AG -- 4 F Cotton Insecticide	Imidacloprid
000228–00694	Imida E-Ag 1.6 F Insecticide	Imidacloprid
000228–00696	ET-O25	Imidacloprid
000228–00697	ET-024	Imidacloprid
000228–00701	Eti 105 25 I	Imidacloprid
000239–01349	Ortho Sevin 5 Dust	Carbaryl
000239–02181	Ortho Sevin Garden Dust	Carbaryl
000239–02628	Ortho Sevin Liquid Brand Carbaryl Insecticide Formula I	Carbaryl
000241 ID–03–0017	Prowl H2O Herbicide	Pendimethalin

TABLE 1.—REGISTRATIONS WITH PENDING REQUESTS FOR CANCELLATION—Continued

Registration no.	Product Name	Chemical Name
000241 LA–04–0004	Beyond Herbicide Clearfield Production System	Imazamox
000241 MN–08–0003	Prowl H2O Herbicide	Pendimethalin
000241 MO–04–0003	Beyond Herbicide	Imazamox
000241 MS–04–0016	Beyond Herbicide	Imazamox
000241 NH–04–0001	Arsenalapplicators Concentrate Herbicide	2-(4,5-Dihydro-4-methyl-4-(1-methylethyl)-5-oxo-1H-imidazol-2-yl)-3-pyridinecarboxylic acid
000241 OR–03–0030	Prowl H2O Herbicide	Pendimethalin
000241 TX–04–0003	Raptor Herbicide	Imazamox
000241 WA–03–0037	Prowl H2O Herbicide	Pendimethalin
000241 WA–99–0003	Prowl 3.3 EC Herbicide	Pendimethalin
000279–03026	Ammo Technical Insecticide	Cypermethrin
000279 CO–92–0001	Furadan 4F Insecticide/nematicide	Carbofuran
000279 ID–91–0007	Furadan 4F Insecticide/nematicide	Carbofuran
000279 OR–91–0006	Furadan 4F	Carbofuran
000352 ID–02–0016	Dupont Mankocide	Mancozeb
		Copper hydroxide
000352 OR–01–0029	Direx 4l	Diuron
000352 OR–01–0030	Direx 80DF	Diuron
000352 OR–01–0033	Mankocide	Copper hydroxide
		Mancozeb
000352 PR–04–0002	Dupont Assure II Herbicide	Propanoic acid, 2-?4-?(6-chloro-2-quinoxalinyl)oxyphenoxyU-, ethylester, (R)-
000352 WI–08–0004	Dupont Coragen Insect Control	Chlorantraniliprole
000352 WY–05–0002	Dupont Velpar L Herbicide	Hexazinone
000400 AL–08–0005	Temprano	Abamectin
000400 AL–79–0017	Vitavax-200 Flowable Fungicide (vitavax with Thiram)	Thiram
		Carboxin
000400 AL–91–0005	Comite Agricultural Miticide	Propargite
000400 AZ–97–0004	Comite Agricultural Miticide	Propargite
000400 GA–04–0002	Dimilin 25W	Diflubenzuron
000400 GA–08–0005	Temprano Miticide/insecticide	Abamectin
000400 GA–91–0003	Comite Agricultural Miticide	Propargite
000400 ID–03–0012	Terraclor Flowable Fungicide	Pentachloronitrobenzene
000400 MD–05–0002	Acramite 50WS	Bifenazate
000400 NC–91–0007	Comite Agricultural Miticide	Propargite
000400 NM–94–0001	Comite II	Propargite

TABLE 1.—REGISTRATIONS WITH PENDING REQUESTS FOR CANCELLATION—Continued

Registration no.	Product Name	Chemical Name
000400 OR–03–0022	mite-6E	Propargite
000400 OR–07–0009	Acramite-4SC	Bifenazate
000400 OR–07–0010	Acramite-4SC	Bifenazate
000400 OR–07–0019	Acramite-4SC	Bifenazate
000400 VA–04–0001	Acramite 50WS	Bifenazate
000400 VA–91–0006	Comite Agricultural Miticide	Propargite
000400 WA–91–0017	Omite 6E	Propargite
000498–00116	Chase-MM Flying Insect Killer Formula 2	d-trans-Chrysanthemum monocarboxylic ester of dl-2-allyl-4-hydroxy-3-methyl-2-cyclopenten-1-
		Resmethrin
000498–00117	Chase-MM House and Garden Insect Killer Formula 3	Resmethrin
		d-trans-Chrysanthemum monocarboxylic ester of dl-2-allyl-4-hydroxy-3-methyl-2-cyclopenten-1-
000498–00177	Spraypak Instutional Ant and Roach Residual Spray	Esfenvalerate
		Prallethrin
		MGK 264
000524–00152	Granular Ramrod 20	Propachlor
000524–00310	Ramrod Flake	Propachlor
000524–00331	Ramrod Flowable Herbicide	Propachlor
000538–00026	Scotts Proturf Weedgrass Preventer	Bensulide
000538–00072	Scotts Super Turf Builder Plus 2 for Grass	2-4,D
		Mecoprop-P
000538–00083	Scotts Shrub &Tree Weed Preventer Plus Fertilizer 20-4	Trifluralin
000538–00102	Stop Weeds Before They Start	Trifluralin
000538–00155	Halts Plus Turf Builder	Bensulide
000538–00164	Goosegrass/crabgrass Control	Oxadiazon
		Bensulide
000538–00167	Super Plus 2 Weed Control Plus Lawn Fertilizer	2-4,D
		Dicamba
		Mecoprop-P
000538–00183	Proturf Fluid Fungicide	Iprodione
		Thiophanate-methyl
000538–00196	Proturf Fertilizer Plus Turf Weedgrass Control	Pendimethalin
000538–00205	Scotts Lawn Pro Weed &Feed Weed Control Plus Lawn Fertilizer	2-4,D
		Mecoprop-P

TABLE 1.—REGISTRATIONS WITH PENDING REQUESTS FOR CANCELLATION—Continued

Registration no.	Product Name	Chemical Name
000538–00208	Fertilizer Plus Weed Control	Dicamba
		2-4,D
000538–00209	Turf Builder W/plus 2 for Lawns Plus Lawn Fertilizer	Dicamba
		2-4,D
000538–00210	Scotts Turf Builder Plus 2 for Lawns Plus Lawn Fertilizer	Dicamba
		2-4,D
000538–00213	Proturf Turf Fertilizer Plus Preemergent Weed Control	Pendimethalin
000538–00215	Scotts Lawn Pro Weed and Feed	2-4,D
		Mecoprop-P
000538–00227	Fertilizer Plus Weedgrass Control	Pendimethalin
000538–00257	Fertilizer Plus Preemergent Weed Control II	Oxadiazon
		Pendimethalin
000538–00294	Grubex II	Benzoic acid, 4-chloro-, 2-benzoyl-2-(1,1-dimethylethyl)hydrazide
000748–00011	Ecostern	Zinc pyrithione
000748–00068	Para-Dichlorobenzene	Paradichlorobenzene
000748–00276	PPG Algae Destroyer	Calcium hypochlorite
000769–00584	R & M Flea &Tick Fogger #1	Tetramethrin
		Esfenvalerate
000769–00598	R & M Flea &Tick Shampoo #6	MGK 264
		Phenothrin
		d-trans-Chrysanthemum monocarboxylic ester of dl-2-allyl-4-hydroxy-3-methyl-2-cyclopenten-1-
000769–00609	R & M Aerosol Flying Insect Spray	Phenothrin
		Tetramethrin
000769–00713	SMCP 3.73% Pramitol Vegetation Killer	Prometon
000769–00833	Miller Mico Fume	Dazomet
000769–00898	Pratt Triple X Na Weed Killer	2,4-D, 2-ethylhexyl ester
		Prometon
000769–00931	Drop Dead Household Fly &Insect Spray	Phenothrin
		Tetramethrin
000769–00971	Sevin Brand 80% DB	Carbaryl
000769–00976	Sevin Brand Carbaryl Insecticide 2% Granular Insecticide	Carbaryl
000869–00027	Green Light 50% Malathion	Malathion
000869–00067	Green Light Dormant Spray Also Summer Spray	Aliphatic petroleum solvent

TABLE 1.—REGISTRATIONS WITH PENDING REQUESTS FOR CANCELLATION—Continued

Registration no.	Product Name	Chemical Name
000869–20202	Green Light Roach Powder	Boric acid
000875–00097	Accord II Iodine Detergent-Sanitizer and Germicide	Iodine
		Phosphoric acid
001021–01110	Evergreen Growers Spray	Pyrethrins
001021–01735	Evergreen Growers Spray 7439	Pyrethrins
001021–01747	Premium Pyganic 175	Pyrethrins
001021–01843	Permethrin 10% Pour on	Permethrin
001021–01844	Permethrin 0.25% Granules	Permethrin
001021–01848	Permethrin 3.2 MUP	Permethrin
001021–01849	Permethrin 0.5%g Homeowner	Permethrin
001021–01850	Permethrin 0.5%gc	Permethrin
001021 CA–02–0015	Pyganic Crop Protection EC 1.4	Pyrethrins
001381–00153	Imperial 6% Malathion Grain Dust	Malathion
001381 AL–06–0002	Arctic 3.2 EC	Permethrin
001381 AR–07–0014	Arctic 3.2 EC	Permethrin
001381 FL–03–0008	Pounce 3.2 EC Insecticide	Permethrin
001381 FL–06–0002	Arctic 3.2 EC	Permethrin
001381 GA–05–0005	Arctic 3.2 EC	Permethrin
001381 MS–05–0023	Arctic 3.2 EC	Permethrin
001381 SC–05–0006	Arctic 3.2 EC	Permethrin
001381 TN–05–0009	Arctic 3.2 EC	Permethrin
001381 TX–06–0015	Arctic 3.2 EC	Permethrin
001448–00085	Busan 1020	Metam-sodium
001448–00362	Busan 1180	Carbamodithioic acid, methyl-, monopotassium salt
001706–00216	Nalcon DGH-M	Dodecylguanidine hydrochloride
001706–20002	Nalco 92WT004	Sodium hypochlorite
001839–00109	20% Veterinarian Type Disinfectant	Alkyl* dimethyl benzyl ammonium chloride *(60%C14, 30%C16, 5%C18, 5%C12)
		Alkyl* dimethyl ethylbenzyl ammonium chloride *(68%C12, 32%C14)
001839–00140	BTC 495	Alkyl* dimethyl benzyl ammonium chloride *(60%C14, 30%C16, 5%C18, 5%C12)
		Alkyl* dimethyl benzyl ammonium chloride *(67%C12, 25%C14, 7%C16, 1%C8, C10, and C18)
		1-Decanaminium, N-decyl-N,N-dimethyl-, chloride
		Alkyl* dimethyl ethylbenzyl ammonium chloride *(68%C12, 32%C14)
001839–00143	NP 11.0 HW (D &F) Detergent/disinfectant	1-Decanaminium, N-decyl-N,N-dimethyl-, chloride
		1-Octanaminium, N,N-dimethyl-N-octyl-, chloride
		1-Decanaminium, N,N-dimethyl-N-octyl-, chloride

TABLE 1.—REGISTRATIONS WITH PENDING REQUESTS FOR CANCELLATION—Continued

Registration no.	Product Name	Chemical Name
		Alkyl* dimethyl benzyl ammonium chloride *(50%C14, 40%C12, 10%C16)
001839–00145	NP 7.0 (d & f) Detergent/disinfectant	1-Decanaminium, N-decyl-N,N-dimethyl-, chloride
		Alkyl* dimethyl benzyl ammonium chloride *(50%C14, 40%C12, 10%C16)
		1-Decanaminium, N,N-dimethyl-N-octyl-, chloride
		1-Octanaminium, N,N-dimethyl-N-octyl-, chloride
001839–00147	Np 22.0 HW (D & F) Detergent/disinfectant	1-Decanaminium, N,N-dimethyl-N-octyl-, chloride
		1-Octanaminium, N,N-dimethyl-N-octyl-, chloride
		Alkyl* dimethyl benzyl ammonium chloride *(50%C14, 40%C12, 10%C16)
		1-Decanaminium, N-decyl-N,N-dimethyl-, chloride
002382–00125	Duo-Cide Shampoo with D-Trans Allethrin and Sumithrin	Phenothrin
		MGK 264
		d-trans-Chrysanthemum monocarboxylic ester of dl-2-allyl-4-hydroxy-3-methyl-2-cyclopenten-1-
002382–00126	Duocide L.A.	Pyrethrins
		MGK 264
		Permethrin
002596–00028	Hartz Indoor and Outdoor No	Methyl nonyl ketone
002596–00053	Hartz Outdoor No Non-Aerosol Fine Mist Spray	Methyl nonyl ketone
002596–00056	Hartz Indoor No Non-Aerosol Fine Mist Spray	Methyl nonyl ketone
002596–00152	Hartz Ref. 120	Phenothrin
002724–00527	Speer Home and Garden Pressurized Spray	Resmethrin
		d-trans-Chrysanthemum monocarboxylic ester of dl-2-allyl-4-hydroxy-3-methyl-2-cyclopenten-1-
002724–00555	Speer Bee, Wasp, Hornet &Yellow Jacket Jet-Stream Kill	Phenothrin
		d-trans-Chrysanthemum monocarboxylic ester of dl-2-allyl-4-hydroxy-3-methyl-2-cyclopenten-1-
002724–00584	SPI Total Release Aerosol Fogger II	d-trans-Chrysanthemum monocarboxylic ester of dl-2-allyl-4-hydroxy-3-methyl-2-cyclopenten-1-
		Esfenvalerate
002724–00585	Spi Flea and Tick Dip for Dogs.	MGK 264
		Phenothrin
002724–00610	Super Swat II Fly Repellent	Butoxypolypropylene glycol
		MGK 264
		Phenothrin
		Tetramethrin
002724–00673	Speer Ant and Roach Killer II	Prallethrin

TABLE 1.—REGISTRATIONS WITH PENDING REQUESTS FOR CANCELLATION—Continued

Registration no.	Product Name	Chemical Name
		MGK 264
		Esfenvalerate
002724–00676	Speer-It Fogger IV Total Release Aerosol	Tetramethrin
		Esfenvalerate
		MGK 264
002724–00680	SPI Deltamethrin Aerosol Insecticide	Deltamethrin
		S-Bioallethrin
002724–00685	Chaperone Squirrel and Bat Repellent	Naphthalene
002724–00770	Flea Stop Linatoc Dip	MGK 264
		Prallethrin
		Linalool
002792 CO–07–0001	Decco 271 Aerosol	Chlorpropham
002792 ID–06–0022	Decco 271 Aerosol	Chlorpropham
002792 ME–03–0001	Decco 271 Aerosol	Chlorpropham
002792 MN–06–0004	Decco 271 Aerosol	Chlorpropham
002792 ND–06–0007	Decco 271 Aerosol	Chlorpropham
002792 WI–07–0002	Decco 271 Aerosol	Chlorpropham
002935 MA–06–0001	Diazinon 14G	Diazinon
002935 WI–06–0004	Diazinon 14G	Diazinon
004581 NY–08–0006	Hydrothol 191 Granular Aquatic Algicide and Herbicide	Endothall, mono(N,N,-dimethyl alkyl amine) salt
004581 NY–08–0007	Hydrothol 191 Aquatic Algicide and Herbicide	Endothall, mono(N,N,-dimethyl alkyl amine) salt
004822–00172	Raid Household Flying Insect Killer Formula 3	Phenothrin
		d-trans-Chrysanthemum monocarboxylic ester of dl-2-allyl-4-hydroxy-3-methyl-2-cyclopenten-1-
004822–00173	Raid Household Flying Insect Killer Formula 4	d-Allethrin
		Phenothrin
004822–00290	Raid House and Garden Bug Killer Formula 6	Phenothrin
		d-trans-Chrysanthemum monocarboxylic ester of dl-2-allyl-4-hydroxy-3-methyl-2-cyclopenten-1-
004822–00300	Raid Mosquito Coils	d-trans-Chrysanthemum monocarboxylic ester of dl-2-allyl-4-hydroxy-3-methyl-2-cyclopenten-1-
004822–00437	Off! Repellent DH	d-Allethrin
004822–00463	Whitmire Insecticidal Shampoo for Dogs	d-trans-Chrysanthemum monocarboxylic ester of dl-2-allyl-4-hydroxy-3-methyl-2-cyclopenten-1-
		MGK 264
		Phenothrin

TABLE 1.—REGISTRATIONS WITH PENDING REQUESTS FOR CANCELLATION—Continued

Registration no.	Product Name	Chemical Name
004822–00465	P/P Flea &Tick Spray No. 2	Tetramethrin
		Phenothrin
005481–08989	Terraclor Super-X Soil Fungicide W/ Di-Syston	Disulfoton
		Pentachloronitrobenzene
		Etridiazole
005785–00007	Brom-O-Gas contains 1%	Methyl bromide
005785–00008	Brom-O-Gas 0.5%	Methyl bromide
005785–00013	Brom-O-Sol	Methyl bromide
005785–00055	Brom-O-Gas(r) 0.25%	Methyl bromide
005785–00069	Agribrom Tablets	2,4-Imidazolidinedione, 1-bromo-3-chloro-5,5-dimethyl-
005785–00070	Agribrom Granules	2,4-Imidazolidinedione, 1-bromo-3-chloro-5,5-dimethyl-
005785–00109	Methyl Bromide 99.5	Methyl bromide
005785 CA–90–0033	Agribrom Granules	2,4-Imidazolidinedione, 1-bromo-3-chloro-5,5-dimethyl-
005887–00043	Black Leaf 5% Sevin Garden Dust Insecticide	Carbaryl
005887–00118	Black Leaf Fog-It 1 Shot Automatic Insecticide Fogger	Tetramethrin
		Phenothrin
005887–00123	Black Leaf Fly &Mosquito Formula III Spray	Tetramethrin
		Phenothrin
005887–00126	Black Leaf White Fly &Mealy Bug Spray	Phenothrin
005887–00158	Black Leaf Wasp and Hornet Killer Formula IV	Tetramethrin
		Phenothrin
005887–00159	Black Leaf Flying &Crawling Insect Killer	Tetramethrin
		Phenothrin
005887–00163	Black Leaf Liquid Copper Fungicide	Copper salts of fatty and rosin acids
007173–00245	Maki Bait Station	Bromadiolone
007173–00253	Generation Bait Station	Difethialone
007173 CO–06–0009	Rozol Prairie Dog Bait	Chlorophacinone
007173 KS–07–0003	Rozol Prairie Dog Bait	Chlorophacinone
007173 NE–06–0001	Rozol Prairie Dog Bait	Chlorophacinone
007173 OK–08–0002	Rozol Prairie Dog Bait	Chlorophacinone
007173 TX–07–0008	Rozol Prairie Dog Bait	Chlorophacinone
007173 WY–07–0005	Rozol Prairie Dog Bait	Chlorophacinone
007313–00011	Amercoat 277e Marine Antifouling Paint	Cuprous oxide
007401–00337	Hi-Yield Vitamin B1	1-Naphthaleneacetic acid

TABLE 1.—REGISTRATIONS WITH PENDING REQUESTS FOR CANCELLATION—Continued

Registration no.	Product Name	Chemical Name
007401 MS–90–0023	2,4-D Amine Type Weed Killer	2,4-D, dimethylamine salt
007401 MS–97–0007	Weedar 64 (r) Broadleaf Herbicide	2,4-D, dimethylamine salt
007401 MS–98–0008	Weedar 64 Broadleaf Herbicide	2,4-D, dimethylamine salt
007969 NV–96–0002	Basagran Herbicide	3-Isopropyl-1H-2,1,3-benzothiadiazin-4(3H)-one-2,2-dioxide, sodium salt
007969 SD–06–0001	Establish Life Herbicide	dimethenamide-P
		Atrazine
007969 TN–09–0005	Paramount Herbicide	Quinclorac
008898–00017	Euretin TBTO	Tributyltin oxide
009198–00164	The Anderson 0.1% Deltagard Lawn Insect Granules	Deltamethrin
009688–00041	Chemsico Dual Flea Control	d-trans-Chrysanthemum monocarboxylic ester of dl-2-allyl-4-hydroxy-3-methyl-2-cyclopenten-1-
		MGK 264
		Phenothrin
009688–00051	Chemsico Automatic Insect Fogger “B”	MGK 264
		d-trans-Chrysanthemum monocarboxylic ester of dl-2-allyl-4-hydroxy-3-methyl-2-cyclopenten-1-
		Phenothrin
009688–00151	Tralex Aerosol	MGK 264
		d-trans-Chrysanthemum monocarboxylic ester of dl-2-allyl-4-hydroxy-3-methyl-2-cyclopenten-1-
		Tralomethrin
009779–00355	Sprout-Gard	Dithiopyr
009779–00356	Sprout-Gard II	Dithiopyr
009779–00361	Sprout-Gard AR	Dithiopyr
009779 LA–98–0005	Prometryne 4l Herbicide	Prometryn
009779 MS–96–0013	Prometryne 4l Herbicide	Prometryn
010163–00123	Gowan Pcnb 10% Granular	Pentachloronitrobenzene
010163–00222	Prefar 6-E Herbicide	Bensulide
010163–00240	Hexygon Ovicide/miticide	Hexythiazox
010163 CA–06–0025	Eptam 7-E	Carbamothioic acid, dipropyl-, S-ethyl ester
010163 ID–06–0001	Eptam 7-E (for Enhabced Control of Annual/perennial Grass	Carbamothioic acid, dipropyl-, S-ethyl ester
010163 LA–04–0006	Imidan 2.5-EC	Phosmet
010163 MS–04–0017	Imidan 2.5-EC	Phosmet
010163 NC–02–0004	Imidan 2.5-EC	Phosmet
010163 SC–95–0006	Imidan 70-Wp Agricultural Insecticide	Phosmet
010900–00056	882 Spray Disinfectant	Alkyl* dimethyl benzyl ammonium chloride *(60%C14, 30%C16, 5%C18, 5%C12)
		Alkyl* dimethyl ethylbenzyl ammonium chloride *(68%C12, 32%C14)

TABLE 1.—REGISTRATIONS WITH PENDING REQUESTS FOR CANCELLATION—Continued

Registration no.	Product Name	Chemical Name
010900–00077	855 Dog &Cat Repellent	Methyl nonyl ketone
028293–00042	Unicorn Ear Mite Control	Rotenone
028293–00107	Unicorn Liquid Insect Killer No.2	Resmethrin
028293–00152	Unicorn Flea &Tick Spray IV	d-trans-Chrysanthemum monocarboxylic ester of dl-2-allyl-4-hydroxy-3-methyl-2-cyclopenten-1-
		Resmethrin
035935–00064	ET-016	Imidacloprid
042750–00043	Albaugh Dicamba Sodium Salt	Dicamba, sodium salt
045385–00013	Chem-Tox Industrial Insect Spray contains Baygon	Propoxur
053883–00129	Propiconazole Pro	Propiconazole
059639 AR–05–0005	Orthene 90S	Acephate
059639 AR–89–0008	Orthene 90 S	Acephate
059639 CO–00–0006	Orthene 97 Pellets	Acephate
059639 ID–06–0099	Orthene 97 Pellets	Acephate
059639 LA–05–0004	Orthene 90S	Acephate
059639 LA–96–0004	Valent Bolero 10 G	Thiobencarb
059639 MI–08–0002	Orthene Turf, Tree &Ornamental Spray 97	Acephate
059639 MO–02–0002	Valor Herbicide	Flumioxazin
059639 MS–93–0011	Valent Bolero 10 G	Thiobencarb
059639 MS–97–0010	Orthene 90 S	Acephate
059639 OH–97–0007	Orthene Turf, Tree &Ornamental Spray WSP	Acephate
059639 OK–89–0002	Orthene 90 S	Acephate
059639 OR–05–0014	Zeal Miticide	Etoxazole
059639 TX–79–0014	Orthene 75 S Soluble Powder	Acephate
059639 TX–91–0003	Orthene 90 S	Acephate
059639 TX–93–0024	Valent Bolero 10 G	Thiobencarb
059639 TX–94–0001	Orthene 90 S	Acephate
060063–00038	TPTH 80 WP	Fentin hydroxide
061483–00013	Daconate	MSMA (and salts)
061483–00014	Daconate 6	MSMA (and salts)
061483–00015	Bueno-6	MSMA (and salts)
061483–00017	Daconate Super Brand	MSMA (and salts)
061483–00018	Bueno	MSMA (and salts)
066222 MS–04–0003	Chlorpyrifos 4E AG	Chlorpyrifos
066222 OR–01–0027	Galigan 2E	Oxyfluorfen
066222 UT–05–0001	Rimon 0.83 EC	Novaluron

TABLE 1.—REGISTRATIONS WITH PENDING REQUESTS FOR CANCELLATION—Continued

Registration no.	Product Name	Chemical Name
067517–00013	Space Mist Insecticide	Resmethrin
067517–00041	Rose and Flower Spray	Pyrethrins
		Piperonyl butoxide
067517–00042	Tomato and Vegetable Spray	Piperonyl butoxide
		Pyrethrins
067517–00043	Fly-A-Rest AQ	Pyrethrins
		Piperonyl butoxide
067517–00051	Flea and Tick Spray	Permethrin
		Pyrethrins
067517–00080	Permethrin 10% Oil Base Concentrate	Permethrin
067760–00051	Glyfos Ready-To-Use 0.75% Weed &Grass Killer	Glyphosate-isopropylammonium
067760–00052	Glyfos Concentrate 5% Weed &Grass Killer	Glyphosate-isopropylammonium
067760–00053	Glyfos Concentrate 16.5% Weed &Grass Killer	Glyphosate-isopropylammonium
067760–00054	Glyfos Concentrate 7.5% Weed &Grass Killer	Glyphosate-isopropylammonium
067760–00062	Glyfos Ready-To-Use 1.25% Weed and Grass Killer	Glyphosate-isopropylammonium
067760–00063	Glyfos Concentrate 20% Weed and Grass Killer	Glyphosate-isopropylammonium
068708–00001	EC6114A	5-Chloro-2-methyl-3(2H)-isothiazolone
		2-Methyl-3(2H)-isothiazolone
068708–00002	EC6113A	Hexahydro-1,3,5-tris(2-hydroxyethyl)-s-triazine
069592–00014	QST 20799 Technical	Muscodor albus strain QST 20799
069592–00015	Arabesque	Muscodor albus strain QST 20799
069592–00017	Andante	Muscodor albus strain QST 20799
069592–00018	Glissade	Muscodor albus strain QST 20799
069592 CA–04–0014	Serenade ASO	QST 713 strain of bacillus subtilis
069592 PR–06–0001	Serenade ASO	QST 713 strain of bacillus subtilis
069592 PR–06–0002	Serenade ASO	QST 713 strain of bacillus subtilis
070506–00079	Agvalue Picloram Technical	Picloram
070506–00080	Picloram 22	Picloram-potassium
070506–00081	Picloram 2	Picloram-potassium
070506–00203	Tebuconazole 3.6fl Liquid Flowable Fungicide	Tebuconazole
070506–00204	Tebuconazole 45 WDG	Tebuconazole
070506 AL–85–0008	Aquathol K	Endothal-dipotassium
070506 FL–96–0015	Aquathol K Aquatic Herbicide	Endothal-dipotassium

TABLE 1.—REGISTRATIONS WITH PENDING REQUESTS FOR CANCELLATION—Continued

Registration no.	Product Name	Chemical Name
070506 GA–95–0006	Aquathol K	Endothal-dipotassium
070506 MN–07–0002	Dupont Super Tin 80WP Fungicide	Fentin hydroxide
070506 MN–07–0003	Dupont Super Tin 4l Fungicide	Fentin hydroxide
070506 MT–07–0001	Dupont Super Tin 80WP Fungicide	Fentin hydroxide
070506 ND–06–0006	Dupont Super Tin 80wp Fungicide	Fentin hydroxide
070506 NY–98–0002	Aquathol K Aquatic Herbicide	Endothal-dipotassium
070506 NY–99–0003	Aquathol Super K Granular Aquatic Herbicide	Endothal-dipotassium
070506 SC–93–0001	Aquathol K	Endothal-dipotassium
070506 TX–06–0006	Aquathol Super K Aquatic Herbicide	Endothal-dipotassium
070506 TX–06–0007	Aquathol K Aquatic Herbicide	Endothal-dipotassium
070506 TX–06–0009	Hydrothol 191 Granular Aquatic Algicide and Herbicide	Endothall, mono(N,N,-dimethyl alkyl amine) salt
070506 TX–06–0010	Hydrothol 191 Aquatic Algicide and Herbicide	Endothall, mono(N,N,-dimethyl alkyl amine) salt
070506 TX–06–0011	Accelerate A Harvest Aid for Cotton	Endothall
070506 TX–81–0032	Accelerate A Harvest Aid for Cotton	Endothall, mono(N,N,-dimethyl alkyl amine) salt
070506 TX–99–0002	Aquathol K Aquatic Herbicide	Endothal-dipotassium
070506 TX–99–0004	Aquathol Super K Granular Aquatic Herbicide	Endothal-dipotassium
070506 TX–99–0005	Hydrothol 191 Granular Aquatic Algicide and Herbicide	Endothall, mono(N,N,-dimethyl alkyl amine) salt
070506 TX–99–0006	Hydrothol 191	Endothall, mono(N,N,-dimethyl alkyl amine) salt
071711 ID–04–0008	Moncut SC	Flutolanil
071711 TX–02–0005	Applaud 70WP	Buprofezin
071711 VA–02–0001	Applaud 70WP	Buprofezin
071711 WA–01–0016	Moncut 50WP	Flutolanil
073049–00078	SBP-1382 Concentrate 40	Resmethrin
073049–00079	SBP-1382 Insecticide Concentrate 15%	Resmethrin
073049–00080	SBP-1382 Pressurized Wasp &Hornet Spray 0.15%	Resmethrin
073049–00197	CSA Residual F &T Spray for Dogs and Cats	Permethrin
		Pyrethrins
080225 AZ–05–0004	Eptam 7-E	Carbamothioic acid, dipropyl-, S-ethyl ester
081824–00009	Borathor Plus	Boron sodium oxide (B8Na2O13), tetrahydrate (12280-03-4)
083558–00012	Hexazinone Technical	Hexazinone

Unless a request is withdrawn by the registrant within 180 days of publication of this notice, orders will be issued canceling all of these registrations. Users of these pesticides or anyone else desiring the retention of a registration should contact the applicable registrant directly during this 180–day period.

Table 2 of this unit includes the names and addresses of record for all

registrants of the products in Table 1 of this unit, in sequence by EPA company number:

TABLE 2—REGISTRANTS REQUESTING VOLUNTARY CANCELLATION

EPA Company no.	Company Name and Address
000004	Registrations By Design Inc., Agent For: Bonide Products, Inc., P.O.Box 1019, Salem, VA 241533805.
000070	Value Gardens Supply, LLC, d/b/a Garden Value Supply, P.O.Box 585, Saint Joseph, MO 64502.
000100	Syngenta Crop Protection, Inc., Attn: Regulatory Affairs, P.O.Box 18300, Greensboro, NC 274198300.
000192	Value Gardens Supply, LLC, d/b/a Value Garden Supply, P.O.Box 585, Saint Joseph, MO 64502.
000228	Nufarm Americas Inc., 150 Harvester Drive, Suite 200, Burr Ridge, IL 60527.
000239	The Scotts Co., d/b/a The Ortho Group, P.O.Box 190, Marysville, OH 43040.
000241	BASF Corp., P.O.Box 13528, Research Triangle Park, NC 277093528.
000279	FMC Corp. Agricultural Products Group, Attn: Michael C. Zucker, 1735 Market St, Rm 1978, Philadelphia, PA 19103.
000352	E. I. Du Pont De Nemours & Co., Inc. (s300/419), Attn: Manager, US Registration, Dupont Crop Prote, 1007 Market Street, Wilmington, DE 198980001.
000400	Chemtura Corp., Attn: Crop Registration, 199 Benson Rd. (2-5), Middlebury, CT 06749.
000498	Chase Products Co, Putting The Best At Your Fingertips, P.O.Box 70, Maywood, IL 60153.
000524	Monsanto Co., Agent For: Monsanto Co., 1300 I Street, NW, Suite 450 E., Washington, DC 20005.

TABLE 2—REGISTRANTS REQUESTING VOLUNTARY CANCELLATION—Continued

EPA Company no.	Company Name and Address
000538	Scotts Co., The, 14111 Scottslawn Rd, Marysville, OH 43041.
000748	Keller & Heckman, LLP, Agent For: PPG Industries, Inc., 1001 G Street, NW., Suite 500 W., Washington, DC 20001.
000769	Value Gardens Supply, LLC, d/b/a Value Garden Supply, P.O.Box 585, Saint Joseph, MO 64502.
000869	Valent GL Corp., c/o Valent Usa Corp., Agent For: Green Light Co., 1600 Riviera Ave. Suite 200, Walnut Creek, CA 94596.
000875	Johnsondiversey, Inc., P.O.Box 902, Sturtevant, WI 53177.
001021	Mclaughlin Gormley King Co, d/b/a MGK, 8810 Tenth Ave North, Minneapolis, MN 554274319.
001381	Winfield Solutions, LLC, P.O.Box 64589, St. Paul, MN 551640589.
001448	Buckman Laboratories Inc., 1256 North Mclean Blvd, Memphis, TN 38108.
001706	Nalco Co., 1601 W. Diehl Rd., Naperville, IL 605631198.
001839	Stepan Co., 22 W. Frontage Rd., Northfield, IL 60093.
002382	Bracewell & Giuliani LLP, Agent For: Virbac AH, Inc., 1445 Ross Ave. Suite 3800, Dallas, TX 75202.
002596	The Hartz Mountain Corp., Attn: Robert Rosenwasser, 400 Plaza Drive, Secaucus, NJ 07094.
002724	Wellmark International, 1501 E. Woodfield Rd., Suite 200 W., Schaumburg, IL 60173.
002792	Decco US Post-Harvest, Inc., 1713 South California Ave., Monrovia, CA 910160120.
002935	Wilbur Ellis Co., P.O.Box 1286, Fresno, CA 93715.

TABLE 2—REGISTRANTS REQUESTING VOLUNTARY CANCELLATION—Continued

EPA Company no.	Company Name and Address
004581	Cerexagri, Inc., 630 Freedom Business Center, Suite 402, King Of Prussia, PA 19406.
004822	S.C. Johnson & Son Inc., 1525 Howe Street, Racine, WI 53403.
005481	Amvac Chemical Corp., d/b/a Amvac, 4695 Macarthur Ct., Suite 1250, Newport Beach, CA 926601706.
005785	Great Lakes Chem Corp., Director of Regulatory Affairs, P.O.Box 2200, West Lafayette, IN 479962200.
005887	Value Gardens Supply, LLC, d/b/a Value Garden Supply, P.O.Box 585, Saint Joseph, MO 64502.
007173	Liphatech, Inc., 3600 W. Elm Street, Milwaukee, WI 53209.
007313	PPG Industries, Inc., Agent For: PPG Architectural Finishes, Inc., 4325 Rosanna Drive, Allison Park, PA 15101.
007401	Mandava Associates, LLC, Agent For: Voluntary Purchasing Groups, Inc., 6860 N. Dallas Pkwy., Suite 200, Plano, TX 75024.
007969	BASF Corp., Agricultural Products, P.O.Box 13528, Research Triangle Park, NC 277093528.
008898	Chemtura Corp. - Organometallic Specialties, Attn: Willard Cummings (mail Code 2-4), 199 Benson Rd., Middlebury, CT 06749.
009198	The Andersons Lawn Fertilizer Division, Inc., dba/ Free Flow Fertilizer, P.O.Box 119, Maumee, OH 43537.
009688	Chemsico, Div of United Industries Corp., P.O.Box 142642, St Louis, MO 631140642.
009779	Winfield Solutions, LLC, P.O.Box 64589, St Paul, MN 551640589.

TABLE 2—REGISTRANTS REQUESTING VOLUNTARY CANCELLATION—Continued

EPA Company no.	Company Name and Address
010163	Gowan Co, P.O.Box 5569, Yuma, AZ 853665569.
010900	Sherwin-Williams Diversified Brands, 101 Prospect Ave., Cleveland, OH 44115.
028293	Registrations By Design, Inc., Agent For: Phaeton Corp., P.O.Box 1019, Salem, VA 24153.
035935	Nufarm Limited, Agent For: Nufarm Limited, P.O.Box 13439, Reseacrch Triangle Park, NC 27709.
042750	Albaugh Inc., 1525 NE 36th Street, Ankeny, IA 50021.
045385	H.R. Mclane, Inc., Agent For: CTX-Cenol, Inc., 7210 Red Rd., Suite 206a, Miami, FL 33143.
053883	D. O'shaughnessy Consulting, Inc., Agent For: Control Solutions, Inc., 427 Hide Away Circle, Cub Run, KY 42729.
059639	Valent U.S.A. Corp., 1600 Riviera Ave. Suite 200, Walnut Creek, CA 94596.
060063	Sipcam Agro USA, Inc., 2520 Meridian Pkwy., Suite 525, Durham, NC 27713.
061483	Kmg-Bernuth, Inc., 9555 W. Sam Houston Pkwy South, Suite 600, Houston, TX 77099.
066222	Makhteshim-Agan of North America Inc., 4515 Falls of Neuse Rd, Suite 300, Raleigh, NC 27609.
067517	Virbbac AH, Inc., Agent For: PM Resources Inc., P.O. Box 162059, Fort Worth, TX 76161.
067760	Cheminova, Inc., 1600 Wilson Blvd., Suite 700, Arlington, VA 22209.
068708	Nalco Co., Agent For: Nalco Co., 1601 W. Diehl Rd, Naperville, IL 60563.

TABLE 2—REGISTRANTS REQUESTING VOLUNTARY CANCELLATION—Continued

EPA Company no.	Company Name and Address
069592	Agraquest Inc., 1540 Drew Ave., Davis, CA 956186320.
070506	United Phosphorus, Inc., 630 Freedom Business Center, Suite 402, King Of Prussia, PA 19406.
071711	Nichino America, Inc., 4550 New Linden Hill Rd., Suite 501, Wilmington, DE 19808.
073049	Valent Biosciences Corp., 870 Technology Way, Suite 100, Libertyville, IL 600486316.
080225	Gowan Co., Agent For: Isilya Group Ltd., P.O.Box 5569, Yuma, AZ 85364.
081824	Pyxis Regulatory Consulting, Inc., Agent For: Ensystex II, Inc., 4110 136th St, NW, Gig Harbor, WA 98332.
083558	Mana, Inc., Agent For: Celsius Property B.V., Amsterdam (nl), 4515 Falls of Neuse Rd., Suite 300, Raleigh, NC 27609.

A request to waive the 180–day comment period has been received for the following registrations: 001706-000216; 001706-20002; 060063-00038; 68708-00001; 68708-00002.

III. What is the Agency's Authority for Taking this Action?

Section 6(f)(1) of FIFRA provides that a registrant of a pesticide product may at any time request that any of its pesticide registrations be canceled. FIFRA further provides that, before acting on the request, EPA must publish a notice of receipt of any such request in the **Federal Register**. Thereafter, the Administrator may approve such a request.

IV. Procedures for Withdrawal of Request

Registrants who choose to withdraw a request for cancellation must submit such withdrawal in writing to the person listed under **FOR FURTHER INFORMATION CONTACT**, postmarked before October 4, 2010. This written withdrawal of the request for cancellation will apply only to the applicable FIFRA section 6(f)(1) request listed in this notice. If the product(s) have been subject to a previous cancellation action, the effective date of cancellation and all other provisions of any earlier cancellation action are controlling. The withdrawal request must also include a commitment to pay any reregistration fees due, and to fulfill any applicable unsatisfied data requirements.

V. Provisions for Disposition of Existing Stocks

Existing stocks are those stocks of registered pesticide products which are currently in the United States and which were packaged, labeled, and released for shipment prior to the effective date of the cancellation action. EPA's existing stocks policy (56 FR 29362) provides that: "If a registrant requests to voluntarily cancel a registration where the Agency has identified no particular risk concerns, the registrant has complied with all applicable conditions of reregistration, conditional registration, and data call ins, and the registration is not subject to a Registration Standard, Label Improvement Program, or reregistration decision, the Agency will generally permit a registrant to sell or distribute existing stocks for 1 year after the cancellation request was received. Persons other than registrants will generally be allowed to sell, distribute, or use existing stocks until such stocks are exhausted."

Upon cancellation of the pesticides identified in Table 1, EPA anticipates allowing sale, distribution and use as described above. Exception to this general policy will be made in specific cases when more stringent restrictions on sale, distribution, or use of the products or their ingredients have already been imposed, as in a special review action, or where the Agency has identified significant potential risk concerns associated with a particular chemical.

List of Subjects

Environmental protection, Pesticides and pests.

Dated: March 29, 2010.

Chandler Sirmons,

Acting Director, Information Technology and Resources Management Division, Office of Pesticide Programs.

[FR Doc. 2010–7880 Filed 4–6–2010; 8:45 am]

BILLING CODE 6560–50–S

ENVIRONMENTAL PROTECTION AGENCY

[EPA–HQ–OPP–2009–0191; FRL–8819–2]

Monosodium Methanearsonate (MSMA); Notice of Receipt of Requests to Voluntarily Cancel Pesticide Registrations

AGENCY: Environmental Protection Agency (EPA).

ACTION: Notice.

SUMMARY: In accordance with section 6(f)(1) of the Federal Insecticide, Fungicide, and Rodenticide Act (FIFRA), as amended, EPA is issuing a notice of receipt of requests by the registrants to voluntarily cancel their registrations containing the organic arsenical monosodium methanearsonate (MSMA). The requests would not terminate the last MSMA products registered for use in the United States. EPA intends to grant these requests at the close of the comment period for this announcement unless the Agency receives substantive comments within the comment period that would merit its further review of the requests, or unless the registrants withdraw their requests within this period. Upon acceptance of these requests, any sale, distribution, or use of products listed in this notice will be permitted only if such sale, distribution, or use is consistent with the terms as described in the final order.

DATES: Comments must be received on or before May 7, 2010.

ADDRESSES: Submit your comments, identified by docket identification (ID) number EPA–HQ–OPP–2009–0191, by one of the following methods:

• *Federal eRulemaking Portal*: *http://www.regulations.gov*. Follow the on-line instructions for submitting comments.

• *Mail*: Office of Pesticide Programs (OPP) Regulatory Public Docket (7502P), Environmental Protection Agency, 1200 Pennsylvania Ave., NW., Washington, DC 20460–0001.

• *Delivery*: OPP Regulatory Public Docket (7502P), Environmental Protection Agency, Rm. S–4400, One Potomac Yard (South Bldg.), 2777 S. Crystal Dr., Arlington, VA. Deliveries are only accepted during the Docket Facility's normal hours of operation (8:30 a.m. to 4 p.m., Monday through Friday, excluding legal holidays). Special arrangements should be made for deliveries of boxed information. The Docket Facility telephone number is (703) 305–5805.

Instructions: Direct your comments to docket ID number EPA–HQ–OPP–2009–0191. EPA's policy is that all comments received will be included in the docket without change and may be made available on-line at *http://www.regulations.gov*, including any personal information provided, unless the comment includes information claimed to be Confidential Business Information (CBI) or other information whose disclosure is restricted by statute. Do not submit information that you consider to be CBI or otherwise protected through regulations.gov or e-mail. The regulations.gov website is an "anonymous access" system, which means EPA will not know your identity or contact information unless you provide it in the body of your comment. If you send an e-mail comment directly to EPA without going through regulations.gov, your e-mail address will be automatically captured and included as part of the comment that is placed in the docket and made available on the Internet. If you submit an electronic comment, EPA recommends that you include your name and other contact information in the body of your comment and with any disk or CD-ROM you submit. If EPA cannot read your comment due to technical difficulties and cannot contact you for clarification, EPA may not be able to consider your comment. Electronic files should avoid the use of special characters, any form of encryption, and be free of any defects or viruses.

Docket: All documents in the docket are listed in the docket index available at *http://www.regulations.gov*. Although listed in the index, some information is not publicly available, e.g., CBI or other information whose disclosure is restricted by statute. Certain other material, such as copyrighted material, is not placed on the Internet and will be publicly available only in hard copy form. Publicly available docket materials are available either in the electronic docket at *http://www.regulations.gov*, or, if only available in hard copy, at the OPP Regulatory Public Docket in Rm. S–4400, One Potomac Yard (South Bldg.), 2777 S. Crystal Dr., Arlington, VA. The hours of operation of this Docket Facility are from 8:30 a.m. to 4 p.m., Monday through Friday, excluding legal holidays. The Docket Facility telephone number is (703) 305–5805.

FOR FURTHER INFORMATION CONTACT: Tom Myers, Pesticide Re-evaluation Division (7508P), Office of Pesticide Programs, Environmental Protection Agency, 1200 Pennsylvania Ave., NW., Washington, DC 20460–0001; telephone number: (703) 308–8589; fax number: (703) 308–8005; e-mail address: *myers.tom@epa.gov*.

SUPPLEMENTARY INFORMATION:

I. General Information

A. Does this Action Apply to Me?

This action is directed to the public in general, and may be of interest to a wide range of stakeholders including environmental, human health, and agricultural advocates; the chemical industry; pesticide users; and members of the public interested in the sale, distribution, or use of pesticides. Since others also may be interested, the Agency has not attempted to describe all the specific entities that may be affected by this action. If you have any questions regarding the applicability of this action to a particular entity, consult the person listed under **FOR FURTHER INFORMATION CONTACT**.

B. What Should I Consider as I Prepare My Comments for EPA?

1. *Submitting CBI*. Do not submit this information to EPA through regulations.gov or e-mail. Clearly mark the part or all of the information that you claim to be CBI. For CBI information in a disk or CD-ROM that you mail to EPA, mark the outside of the disk or CD-ROM as CBI and then identify electronically within the disk or CD-ROM the specific information that is claimed as CBI. In addition to one complete version of the comment that includes information claimed as CBI, a copy of the comment that does not contain the information claimed as CBI must be submitted for inclusion in the public docket. Information so marked will not be disclosed except in accordance with procedures set forth in 40 CFR part 2.

2. *Tips for preparing your comments*. When submitting comments, remember to:

i. Identify the document by docket ID number and other identifying information (subject heading, **Federal Register** date and page number).

ii. Follow directions. The Agency may ask you to respond to specific questions or organize comments by referencing a Code of Federal Regulations (CFR) part or section number.

iii. Explain why you agree or disagree; suggest alternatives and substitute language for your requested changes.

iv. Describe any assumptions and provide any technical information and/or data that you used.

v. If you estimate potential costs or burdens, explain how you arrived at your estimate in sufficient detail to allow for it to be reproduced.

vi. Provide specific examples to illustrate your concerns and suggest alternatives.

vii. Explain your views as clearly as possible, avoiding the use of profanity or personal threats.

viii. Make sure to submit your comments by the comment period deadline identified.

II. Background on the Receipt of Requests to Cancel

This notice announces receipt by EPA of requests from registrants to cancel MSMA product registrations. MSMA is an organic arsenical used as a herbicide for application to cotton, golf courses, sod farms, highway rights of ways, bearing and non-bearing fruit trees, athletic fields, parks, and residential lawns among other sites. In letters received by the Agency, the registrants have requested EPA to cancel affected product registrations identified in this notice in Table 1. Specifically, the registrants' have requested voluntary cancellation of all their products containing MSMA. The registrants requests will not terminate the last MSMA products registered in the United States.

III. What Action is the Agency Taking?

This notice announces receipt by EPA of requests from registrants to cancel MSMA product registrations. The affected products and the registrants making the requests are identified in Tables 1 and 2 of this unit.

Under section 6(f)(1)(A) of FIFRA, registrants may request, at any time, that their pesticide registrations be canceled or amended to terminate one or more pesticide uses. Section 6(f)(1)(B) of FIFRA requires that before acting on a request for voluntary cancellation, EPA must provide a 30–day public comment period on the request for voluntary cancellation or use termination. In addition, section 6(f)(1)(C) of FIFRA requires that EPA provide a 180–day comment period on a request for voluntary cancellation or termination of any minor agricultural use before granting the request, unless:

1. The registrants request a waiver of the comment period, or

2. The Administrator determines that continued use of the pesticide would pose an unreasonable adverse effect on the environment.

The MSMA registrants have requested that EPA waive the 180–day comment period. EPA will provide a 30–day comment period on the proposed requests.

Unless a request is withdrawn by the registrant within 30 days of publication of this notice, or if the Agency determines that there are substantive comments that warrant further review of this request, an order will be issued canceling the affected registrations.

TABLE 1.—MSMA PRODUCT REGISTRATIONS WITH PENDING REQUESTS FOR CANCELLATION

Registration Number	Product Name	Chemical Name
42750–28	Weed Hoe 120	MSMA
42750–29	Weed Hoe 108	MSMA
61483–13	Daconate	MSMA
61483–14	Daconate 6	MSMA
61483–15	Bueno-6	MSMA
61483–17	Daconate Super Brand	MSMA
61483–18	Bueno	MSMA

Table 2 of this unit includes the names and addresses of record for the registrants of the products listed in Table 1 of this unit.

TABLE 2.—REGISTRANTS REQUESTING VOLUNTARY CANCELLATION AND/OR AMENDMENTS

EPA Company Number	Company Name and Address
042750	Albaugh Inc., 1525 NE 36th Street Ankeny, IA 50021
061483	KMG-Bernuth, Inc., 9555 W. Sam Houston Pkwy South, Suite 600, Houston, TX 77099

IV. What is the Agency's Authority for Taking this Action?

Section 6(f)(1) of FIFRA provides that a registrant of a pesticide product may at any time request that any of its pesticide registrations be canceled or amended to terminate one or more uses. FIFRA further provides that, before acting on the request, EPA must publish a notice of receipt of any such request in the **Federal Register**. Thereafter, following the public comment period, the Administrator may approve such a request.

V. Procedures for Withdrawal of Request and Considerations for Reregistration of MSMA

Registrants who choose to withdraw a request for cancellation must submit such withdrawal in writing to the person listed under **FOR FURTHER INFORMATION CONTACT**, postmarked before May 7, 2010. This written withdrawal of the request for cancellation will apply only to the applicable FIFRA section 6(f)(1) request listed in this notice. If the products have been subject to a previous cancellation action, the effective date of cancellation and all other provisions of any earlier cancellation action are controlling.

VI. Provisions for Disposition of Existing Stocks

Existing stocks are those stocks of registered pesticide products which are currently in the United States and which were packaged, labeled, and released for shipment prior to the effective date of the cancellation action.

In any order issued in response to these requests for cancellation of product registrations, EPA proposes to include the following provisions as outlined in the organic arsenicals Agreement in Principle for the treatment of any existing stocks of the products identified or referenced in Table 1 in Unit III.

After December 31, 2009, registrants were prohibited from selling or distributing existing stocks of products containing MSMA labeled for all uses, except cotton, sod farms, golf courses, and highway rights-of-way.

After December 31, 2010, persons other than registrants are prohibited from selling or distributing existing stocks of products containing MSMA labeled for all uses, except cotton, sod farms, golf courses, and highway rights-of-way.

After December 31, 2010, existing stocks of products containing MSMA labeled for all uses, except cotton, sod farms, golf courses, and highway rights-of-way, already in the hands of users can be used legally until they are exhausted, provided that such use complies with the EPA-approved label and labeling of the affected product.

After December 31, 2012, registrants are prohibited from selling or distributing existing stocks of products containing MSMA labeled for use on sod farms, golf courses, and highway rights-of-way.

After June 30, 2013, persons other than registrants are prohibited from selling or distributing existing stocks of products containing MSMA labeled for use on sod farms, golf courses, and highway rights-of-way.

After December 31, 2013, use of products containing MSMA labeled for use on sod farms, golf courses, and highway rights-of-way, is prohibited.

If the request for voluntary cancellation is granted, the Agency intends to publish the cancellation order in the **Federal Register**.

List of Subjects

Environmental protection, Pesticides and pests.

Dated: March 30, 2010.

Peter Caulkins,

Acting Director, Pesticide Re-evaluation Division, Office of Pesticide Programs.

[FR Doc. 2010–7865 Filed 4–6–10; 8:45 am]

BILLING CODE 6560–50–S

ENVIRONMENTAL PROTECTION AGENCY

[EPA–HQ–OPP–2008–0723; FRL–8819–1]

Methidathion; Notice of Receipt of Requests to Voluntarily Cancel Pesticide Registrations

AGENCY: Environmental Protection Agency (EPA).

ACTION: Notice.

SUMMARY: In accordance with section 6(f)(1) of the Federal Insecticide, Fungicide, and Rodenticide Act (FIFRA), as amended, EPA is issuing a notice of receipt of requests by the registrants to voluntarily cancel their methidathion registrations. The requests would terminate the last methidathion products registered for use in the United States. EPA intends to grant these requests at the close of the comment period for this announcement unless the Agency receives substantive comments within the comment period that would merit its further review of the requests, or unless the registrants withdraw their requests within this period. Upon acceptance of these requests, any sale, distribution, or use of products listed in this notice will be permitted only if such sale, distribution, or use is consistent with the terms as described in the final order.

DATES: Comments must be received on or before May 7, 2010.

ADDRESSES: Submit your comments, identified by docket identification (ID) number EPA–HQ–OPP–2008–0723, by one of the following methods:

- *Federal eRulemaking Portal*: *http://www.regulations.gov*. Follow the on-line instructions for submitting comments.
- *Mail*: Office of Pesticide Programs (OPP) Regulatory Public Docket (7502P), Environmental Protection Agency, 1200 Pennsylvania Ave., NW., Washington, DC 20460–0001.
- *Delivery*: OPP Regulatory Public Docket (7502P), Environmental Protection Agency, Rm. S–4400, One Potomac Yard (South Bldg.), 2777 S. Crystal Dr., Arlington, VA. Deliveries are only accepted during the Docket Facility's normal hours of operation (8:30 a.m. to 4 p.m., Monday through Friday, excluding legal holidays). Special arrangements should be made for deliveries of boxed information. The Docket Facility telephone number is (703) 305–5805.

Instructions: Direct your comments to docket ID number EPA–HQ–OPP–2008–0723. EPA's policy is that all comments received will be included in the docket without change and may be made available on-line at *http://www.regulations.gov*, including any personal information provided, unless the comment includes information claimed to be Confidential Business Information (CBI) or other information whose disclosure is restricted by statute. Do not submit information that you consider to be CBI or otherwise protected through regulations.gov or e-mail. The regulations.gov website is an "anonymous access" system, which means EPA will not know your identity or contact information unless you provide it in the body of your comment. If you send an e-mail comment directly to EPA without going through regulations.gov, your e-mail address will be automatically captured and included as part of the comment that is placed in the docket and made available on the Internet. If you submit an electronic comment, EPA recommends that you include your name and other contact information in the body of your comment and with any disk or CD-ROM you submit. If EPA cannot read your comment due to technical difficulties and cannot contact you for clarification, EPA may not be able to consider your comment. Electronic files should avoid the use of special characters, any form of encryption, and be free of any defects or viruses.

All documents in the docket are listed in the docket index available at *http://www.regulations.gov*. Although, listed in the index, some information is not publicly available, e.g., CBI or other information whose disclosure is restricted by statute. Certain other material, such as copyrighted material, is not placed on the Internet and will be publicly available only in hard copy form. Publicly available docket materials are available either in the electronic docket at *http://www.regulations.gov*, or, if only available in hard copy, at the OPP Regulatory Public Docket in Rm. S–4400, One Potomac Yard (South Bldg.), 2777 S. Crystal Dr., Arlington, VA. The hours of operation of this Docket Facility are from 8:30 a.m. to 4 p.m., Monday through Friday, excluding legal holidays. The Docket Facility telephone number is (703) 305–5805.

FOR FURTHER INFORMATION CONTACT: Jose Gayoso, Pesticide Re-evaluation Division (7508P), Office of Pesticide Programs, Environmental Protection Agency, 1200 Pennsylvania Ave., NW., Washington, DC 20460–0001; telephone number: (703) 347–8652; fax number: (703) 308–8005; e-mail address: *gayoso.jose@epa.gov*.

SUPPLEMENTARY INFORMATION:

I. General Information

A. Does this Action Apply to Me?

This action is directed to the public in general, and may be of interest to a wide range of stakeholders including environmental, human health, and agricultural advocates; the chemical industry; pesticide users; and members of the public interested in the sale, distribution, or use of pesticides. Since others also may be interested, the Agency has not attempted to describe all the specific entities that may be affected by this action. If you have any questions regarding the applicability of this action to a particular entity, consult the person listed under **FOR FURTHER INFORMATION CONTACT**.

B. What Should I Consider as I Prepare My Comments for EPA?

1. *Submitting CBI*. Do not submit this information to EPA through regulations.gov or e-mail. Clearly mark the part or all of the information that you claim to be CBI. For CBI information in a disk or CD-ROM that you mail to EPA, mark the outside of the disk or CD-ROM as CBI and then identify electronically within the disk or CD-ROM the specific information that is claimed as CBI. In addition to one complete version of the comment that includes information claimed as CBI, a copy of the comment that does not contain the information claimed as CBI must be submitted for inclusion in the public docket. Information so marked will not be disclosed except in accordance with procedures set forth in 40 CFR part 2.

2. *Tips for preparing your comments*. When submitting comments, remember to:

i. Identify the document by docket ID number and other identifying information (subject heading, **Federal Register** date and page number).

ii. Follow directions. The Agency may ask you to respond to specific questions or organize comments by referencing a Code of Federal Regulations (CFR) part or section number.

iii. Explain why you agree or disagree; suggest alternatives and substitute language for your requested changes.

iv. Describe any assumptions and provide any technical information and/or data that you used.

v. If you estimate potential costs or burdens, explain how you arrived at your estimate in sufficient detail to allow for it to be reproduced.

vi. Provide specific examples to illustrate your concerns and suggest alternatives.

vii. Explain your views as clearly as possible, avoiding the use of profanity or personal threats.

viii. Make sure to submit your comments by the comment period deadline identified.

II. Background on the Receipt of Requests to Cancel Registrations

This notice announces receipt by EPA of requests from registrants to cancel methidathion product registrations. Methidathion is a non-systemic, organophosphate (OP) used as an insecticide/acaricide on a wide variety of terrestrial food and feed crops and terrestrial non-food crops. The pesticide acts through inhibition of acetylcholinesterase and is used to kill a broad range of insects and mites. In letters received by the Agency, the registrants have requested EPA to cancel affected product registrations identified in this notice in Table 1. Specifically, the registrants have requested voluntary cancellation of all products containing methidathion. The registrants requests will terminate the last methidathion products registered in the United States.

III. What Action is the Agency Taking?

This notice announces receipt by EPA of requests from registrants to cancel methidathion product registrations. The affected products and the registrants making the requests are identified in Tables 1 and 2 of this unit.

Under section 6(f)(1)(A) of FIFRA, registrants may request, at any time, that their pesticide registrations be canceled or amended to terminate one or more pesticide uses. Section 6(f)(1)(B) of FIFRA requires that before acting on a request for voluntary cancellation, EPA must provide a 30–day public comment period on the request for voluntary cancellation or use termination. In addition, section 6(f)(1)(C) of FIFRA requires that EPA provide a 180–day comment period on a request for voluntary cancellation or termination of any minor agricultural use before granting the request, unless:

1. The registrants request a waiver of the comment period, or

2. The Administrator determines that continued use of the pesticide would pose an unreasonable adverse effect on the environment.

The methidathion registrants have requested that EPA waive the 180–day comment period. EPA will provide a 30–day comment period on the proposed requests.

Unless a request is withdrawn by the registrant within 30 days of publication of this notice, or if the Agency determines that there are substantive comments that warrant further review of this request, an order will be issued canceling the affected registrations.

TABLE 1.—METHIDATHION PRODUCT REGISTRATIONS WITH PENDING REQUESTS FOR CANCELLATION

Registration Number	Product Name	Chemical Name
100-530	Methidathion Technical	Methidathion
10163–236	Supracide 2E Insecticide	Methidathion
10163–244	Supracide 25-W	Methidathion
10163–245	Methidathion Technical	Methidathion
10163-AZ-00-0005	Supracide 2E Insecticide	Methidathion
10163-CA-01-0002	Supracide 2E Insecticide	Methidathion
10163-CA-01-0009	Supracide 25-W	Methidathion
10163-CA-01-0011	Supracide 25-W	Methidathion
10163-CA-02-0002	Supracide 2E Insecticide	Methidathion
10163-CA-04-0023	Supracide 2E Insecticide	Methidathion
10163-CO-01-0003	Supracide 2E Insecticide	Methidathion
10163-FL-99-0013	Supracide 25-W	Methidathion
10163-ID-00-0005	Supracide 2E Insecticide	Methidathion
10163-ID-04-0007	Supracide 2E Insecticide	Methidathion
10163-KS-05-0006	Supracide 2E Insecticide	Methidathion
10163-MT-00-0008	Supracide 2E Insecticide	Methidathion
10163-NV-00-0001	Supracide 2E Insecticide	Methidathion
10163-NV-01-0001	Supracide 2E Insecticide	Methidathion
10163-OK-05-0003	Supracide 2E Insecticide	Methidathion
10163-OR-00-0010	Supracide 2E Insecticide	Methidathion
10163-OR-02-0018	Supracide 2E Insecticide	Methidathion

TABLE 1.—METHIDATHION PRODUCT REGISTRATIONS WITH PENDING REQUESTS FOR CANCELLATION—Continued

Registration Number	Product Name	Chemical Name
10163-TX-05-0003	Supracide 2E Insecticide	Methidathion
10163-UT-00-0006	Supracide 2E Insecticide	Methidathion
10163-WA-00-0006	Supracide 2E Insecticide	Methidathion
10163-WY-05-0001	Supracide 2E Insecticide	Methidathion

Table 2 of this unit includes the names and addresses of record for the registrants of the products listed in Table 1 of this unit.

TABLE 2.—REGISTRANTS REQUESTING VOLUNTARY CANCELLATION AND/OR AMENDMENTS

EPA Company Number	Company Name and Address
000100	Sygenta Crop Protection, Inc. Attn: Regulatory Affairs, PO Box 18300, Greensboro, NC 27419–8300
010163	Gowan Company, PO Box 5569, Yuma, AZ 85366–5569

IV. What is the Agency's Authority for Taking this Action?

Section 6(f)(1) of FIFRA provides that a registrant of a pesticide product may at any time request that any of its pesticide registrations be canceled or amended to terminate one or more uses. FIFRA further provides that, before acting on the request, EPA must publish a notice of receipt of any such request in the **Federal Register**. Thereafter, following the public comment period, the Administrator may approve such a request.

V. Procedures for Withdrawal of Request and Considerations for Reregistration of Methidathion

Registrants who choose to withdraw a request for cancellation must submit such withdrawal in writing to the person listed under **FOR FURTHER INFORMATION CONTACT**, postmarked before May 7, 2010. This written withdrawal of the request for cancellation will apply only to the applicable FIFRA section 6(f)(1) request listed in this notice. If the products(s) have been subject to a previous cancellation action, the effective date of cancellation and all other provisions of any earlier cancellation action are controlling.

VI. Provisions for Disposition of Existing Stocks

Existing stocks are those stocks of registered pesticide products which are currently in the United States and which were packaged, labeled, and released for shipment prior to the effective date of the cancellation action.

In any order issued in response to these requests for cancellation of product registrations, EPA proposes to include the following provisions for the treatment of any existing stocks of the products identified or referenced in Table 1 in Unit III:

After December 31, 2012, registrants are prohibited from selling or distributing existing stocks of products containing methidathion.

After December 31, 2014, persons other than registrants are prohibited from selling or distributing existing stocks of products containing methidathion.

After December 31, 2014, existing stocks of products containing methidathion already in the hands of users can be used legally until they are exhausted, provided that such use complies with the EPA-approved label and labeling of the affected product.

If the request for voluntary cancellation is granted, the Agency intends to publish the cancellation order in the **Federal Register**.

List of Subjects

Environmental protection, Pesticides and pests.

Dated: March 26, 2010.

Richard P. Keigwin, Jr.,

Director, Pesticide Re-evaluation Division, Office of Pesticide Programs.

[FR Doc. 2010–7508 Filed 4–6–10; 8:45 a.m.]

BILLING CODE 6560–50–S

ENVIRONMENTAL PROTECTION AGENCY

[EPA–HQ–OPP–2010–0194; FRL–8820–2]

Industrial Economics, Incorporated; Transfer of Data

AGENCY: Environmental Protection Agency (EPA).

ACTION: Notice.

SUMMARY: This notice announces that pesticide related information submitted to EPA's Office of Pesticide Programs (OPP) pursuant to the Federal Insecticide, Fungicide, and Rodenticide Act (FIFRA) and the Federal Food, Drug, and Cosmetic Act (FFDCA), including information that may have been claimed as Confidential Business Information (CBI) by the submitter, will be transferred to Industrial Economics, Incorporated in accordance with 40 CFR 2.307(h)(3) and 2.308(i)(2). Industrial Economics, Incorporated has been awarded multiple contracts to perform work for OPP, and access to this information will enable Industrial Economics, Incorporated to fulfill the obligations of the contract.

DATES: Industrial Economics, Incorporated will be given access to this information on or before April 12, 2010.

FOR FURTHER INFORMATION CONTACT: Felicia Croom, Information Technology and Resources Management Division (7502P), Office of Pesticide Programs, Environmental Protection Agency, 1200 Pennsylvania Ave., NW., Washington, DC 20460–0001; telephone number: (703) 305–0786; e-mail address: *croom.felicia@epa.gov*.

SUPPLEMENTARY INFORMATION:

I. General Information

A. Does this Action Apply to Me?

This action applies to the public in general. As such, the Agency has not attempted to describe all the specific entities that may be affected by this action. If you have any questions regarding the applicability of this action to a particular entity, consult the person listed under **FOR FURTHER INFORMATION CONTACT**.

B. How Can I Get Copies of this Document and Other Related Information?

EPA has established a docket for this action under docket identification (ID) number EPA–HQ–OPP–2010–0194. Publicly available docket materials are available either in the electronic docket at *http://www.regulations.gov*, or, if only

available in hard copy, at the Office of Pesticide Programs (OPP) Regulatory Public Docket in Rm. S–4400, One Potomac Yard (South Bldg.), 2777 S. Crystal Dr., Arlington, VA. The hours of operation of this Docket Facility are from 8:30 a.m. to 4 p.m., Monday through Friday, excluding legal holidays. The Docket Facility telephone number is (703) 305–5805.

II. Contractor Requirements

Under these contract numbers, the contractor will perform the following:

1. Under Contract No. EP10H000898, the Contractor shall provide expertise and update the computer models, develop new models as appropriate, and educate enforcement staff on the models. The Contractor shall also provide expert advice to law enforcement personnel regarding financial issues that impact enforcement litigation, and, when directed, supports enforcement negotiations.

2. These contracts involve no subcontractors.

The OPP has determined that the contracts described in this document involve work that is being conducted in connection with FIFRA, in that pesticide chemicals will be the subject of certain evaluations to be made under this contract. These evaluations may be used in subsequent regulatory decisions under FIFRA.

Some of this information may be entitled to confidential treatment. The information has been submitted to EPA under sections 3, 4, 6, and 7 of FIFRA and under sections 408 and 409 of FFDCA.

In accordance with the requirements of 40 CFR 2.307(h)(3), the contracts with Industrial Economics, Incorporated, prohibits use of the information for any purpose not specified in these contracts; prohibits disclosure of the information to a third party without prior written approval from the Agency; and requires that each official and employee of the contractor sign an agreement to protect the information from unauthorized release and to handle it in accordance with the *FIFRA Information Security Manual*. In addition, Industrial Economics, Incorporated is required to submit, for EPA approval, a security plan under which any CBI will be secured and protected against unauthorized release or compromise. No information will be provided to Industrial Economics, Incorporated until the requirements in this document have been fully satisfied. Records of information provided to Industrial Economics, Incorporated will be maintained by EPA Project Officers for these contracts. All information supplied to Industrial Economics, Incorporated by EPA for use in connection with these contracts will be returned to EPA when Industrial Economics, Incorporated has completed its work.

List of Subjects

Environmental protection, Business and industry, Government contracts, Government property, Security measures.

Dated: March 29, 2010.

Oscar Morales,

Acting Director, Office of Pesticide Programs.

[FR Doc. 2010–7859 Filed 4–6–10; 8:45 am]

BILLING CODE 6560–50–S

FEDERAL COMMUNICATIONS COMMISSION

Privacy Act System of Records

AGENCY: Federal Communications Commission (FCC or Commission).

ACTION: Notice; one altered Privacy Act system of records; revision of one routine use; and addition of one new routine use.

SUMMARY: Pursuant to subsection (e)(4) of the Privacy Act of 1974, as amended (Privacy Act), 5 U.S.C. 552a, the FCC proposes to change the name of and alter one system of records, FCC/OSP–1, "Broadband Dead Zone Report and Consumer Broadband Test" (formerly FCC/OMD–27, "Broadband Unavailability Survey and Broadband Quality Test"). The altered system of records incorporates a change to the system's name. The FCC will also alter the system's location; the categories of individuals; the categories of records; the purposes for which the information is maintained; one routine use (and add a new routine use); the retrievability, access, safeguards, and retention and disposal procedures; the system manager and address; the record source categories; and make other edits and revisions as necessary to update the information and to comply with the requirements of the Privacy Act.

DATES: In accordance with 5 U.S.C. 552a(e)(4) and (e)(11) of the Privacy Act, any interested person may submit written comments concerning the alteration of this system of records on or before May 7, 2010. Pursuant to Appendix I, 4(e) of OMB Circular A–130, the FCC is asking the Administrator, Office of Information and Regulatory Affairs (OIRA), Office of Management and Budget (OMB), which has oversight responsibility under the Privacy Act to review system of records notices (SORN), to grant a waiver of the 40 day review period by OMB and Congress for this system of records. The FCC is requesting this waiver to permit the sharing of the information in this system with the National Telecommunications and Information Administration (NTIA) and the NTIA State Designated Entities for the 56 State Broadband Data and Development Grant Programs in order to save resources, time, avoid duplication, synthesize methodology, and gather accurate availability information. The proposed altered system of records will become effective on May 7, 2010 unless the FCC receives comments that require a contrary determination. The Commission will publish a document in the **Federal Register** notifying the public if any changes are necessary. As required by 5 U.S.C. 552a(r) of the Privacy Act, the FCC is submitting reports on this proposed altered system to OMB and Congress.

ADDRESSES: Address comments to Leslie F. Smith, Privacy Analyst, Performance Evaluation and Records Management (PERM), Federal Communications Commission (FCC), 445 12th Street, SW., Washington, DC 20554, or via the Internet at *Leslie.Smith@fcc.gov.*

FOR FURTHER INFORMATION CONTACT: Leslie F. Smith, Performance Evaluation and Records Management (PERM), Federal Communications Commission (FCC), 445 12th Street, SW., Washington, DC 20554, (202) 418–0217, or via the Internet at *Leslie.Smith@fcc.gov.*

SUPPLEMENTARY INFORMATION: As required by the Privacy Act of 1974, as amended, 5 U.S.C. 552a(e)(4) and (e)(11), this document sets forth notice of the proposed alteration of one system of records maintained by the FCC, revision of one routine use, and addition of one new routine use. The FCC previously gave complete notice of the system of records (FCC/OMD–27, "Broadband Unavailability Survey and Broadband Quality Test") covered under this Notice by publication in the **Federal Register** on December 30, 2009 (74 FR 69098). This notice is a summary of the more detailed information about the proposed altered system of records, which may be viewed at the location given above in the "**ADDRESSES**" section. The purposes for altering FCC/OSP–1, "Broadband Dead Zone Report and Consumer Broadband Test" are to change the name of the system; to change the system location; to revise the categories of individuals; to revise the categories of records; to revise the purposes for which the information is maintained; to revise one routine use

and add a new routine use; to revise the retrievability, access, safeguards, and retention and disposal procedures; to change the system manager and address; to change the record source categories; and to make other edits and revisions as necessary to update the information and to comply with the Privacy Act.

The FCC will achieve these purposes by altering this system of records with these changes:

Revision of the title of this system, for clarity and to note that this system has been moved from the Office of Managing Director (OMD) to the Office of Strategic Planning (OSP);

Revision of the language in the system location, for clarity and to note that that this system has been moved from the Office of Managing Director (OMD) to the Office of Strategic Planning (OSP);

Revision of the language regarding the categories of individuals in the system, for clarity and to add that the categories of individuals include individuals who participate in the Broadband Dead Zone Report voluntary survey and individuals who participate in the voluntary Consumer Broadband Test.

Revision of the language regarding the categories of records in the system, for clarity and to add that the categories of records include the street address, city, state, and zip code of each individual who selects to participate in the Broadband Dead Zone Report survey and each individual who participates in the Internet service Consumer Broadband Test; and that (A)dditionally the Consumer Broadband Test also collects the "Internet Protocol (IP) address" for each user who selects to participate;

Revision of the language regarding the purposes for which the information is maintained, for clarity and to add that the Commission uses the records in this system collected from the Broadband Dead Zone Report and the Consumer Broadband Test to determine the access of US residents to broadband—cable, and DSL, fiber, mobile wireless, and other broadband services, and to gather data on the quality of the broadband services being provided; that (T)he Consumer Broadband Test permits users to measure the quality of their fixed or mobile Internet broadband connection; that (I)ndividual street addresses and IP addresses will not be made public by the FCC, but aggregated or anonymized data from the database may be made public; that (A)dditionally, IP address may be shared with FCC software partners as part of the Consumer Broadband Test application; that (T)hese partners may publish the IP address and broadband performance data to the public (but the IP address will not be associated with a street address); and that (t)hese data may be used to inform implementation of the National Broadband Plan, the National Broadband Map and other proceedings related to the provisioning of broadband services;

Revision of Routine Use (7) to incorporate the change in the title of this system, Broadband Dead Zone Report and Consumer Broadband Test in this routine use.

Routine Use (7) allows that disclosure of the information collected through the Broadband Dead Zone Report and Consumer Broadband Test, with the exception of any personally identifiable information (PII), may be shared with public-public-private partnerships and with the Telecommunications Program of the United States Department of Agriculture (USDA) Rural Development Agency. This sharing regime is described in the Commission's Broadband Data Order of 2008 (FCC 08–89).

Addition of a new Routine Use (8) to allow information collected through the Broadband Dead Zone Report and the Consumer Broadband Test, including the personally identifiable information (PII), to be shared with the National Telecommunications and Information Administration (NTIA) and the 56 State Designated Entities for the State Broadband Data & Development Grant Program:

Routine Use (8) allows that disclosure of the information collected through the Broadband Dead Zone Report and Consumer Broadband Test, including the personally identifiable information (PII), may be shared with the National Telecommunications and Information Administration (NTIA) and the 56 State Designated Entities for the State Broadband Data & Development Grant Program, who are tasked with gathering broadband availability information that will be delivered to the FCC and NTIA for compilation into the National Broadband Map. Any PII shared with these entities will be disclosed under the rules of the agreement between NTIA and the state grantees governing the protection of sensitive, protected, or classified data collected pursuant to the grant program. The NTIA and the state grantees will not make any PII publicly available.

Revision of the language regarding the policies and practices for retrieving the records in this system, for clarity and to add a fourth response to the broadband Internet access question: (4) the individual's IP address; and to incorporate the change in the system's title so that (f)urthermore, the information may be retrieved and/or aggregated based upon other Consumer Broadband Test variables, such as broadband speed, latency, jitter, and packet loss, among other broadband quality variables;

Revision of the language regarding the policies and practices for accessing and safeguarding the records in this system, for clarity and to incorporate the change in the system's title to the Broadband Dead Zone Report or Consumer Broadband Test's database; and to add that (a)ccess to the information housed in the Dead Zone Report or the Consumer Broadband Test database, which is housed in the FCC's computer network databases, is restricted to authorized supervisors and staff in the Office of Strategic Planning (OSP) and the Information Technology Center's (ITC) Planning and Support Group, who maintain these computer databases. Additionally, staff of the National Broadband Map may be granted access to this data.

Revision of the language regarding the policies and practices for the retention and disposal of the records in this system, for clarity and to incorporate the change in the system's title thus, the information in the system is limited to electronic files, records, and data, which pertains to the Broadband Dead Zone Report, which includes: (1) The information obtained from individuals who participated in the Consumer Broadband Test;

Revision of the language regarding the system manager and address, notification, record access, and contesting record procedures, to incorporate the change in the system manager from the Office of Managing Director (OMD) to the Office of Strategic Planning (OSP); and that it is OSP to whom inquiries, notification procedures, record access procedures, and contesting records procedures should be addressed; and

Revision of the language regarding the record source categories, for clarity and to incorporate the change in the system's name, and that the sources for the information in this system are the Broadband Dead Zone Report survey respondents and the Consumer Broadband Test participants.

The Commission will use the records in FCC/OSP–1, "Broadband Dead Zone Report and Consumer Broadband Test," which are collected from the Broadband Dead Zone Report and the Consumer Broadband Test to determine the access of US residents to broadband—cable, and DSL, fiber, mobile wireless, and other broadband services, and to gather data on the quality of the broadband services being provided. The Consumer Broadband Test permits users to

measure the quality of their fixed or mobile Internet broadband connection. Individual street addresses will not be made public, but aggregated or anonymized data from the database may be made public. These data may be used to inform implementation of the National Broadband Plan, the National Broadband Map and other proceedings related to the provisioning of broadband services.

This notice meets the requirement of documenting the changes to this system of records that the FCC maintains, and provides the public, OMB, and Congress an opportunity to comment.

FCC/OSP–1

SYSTEM NAME:

Broadband Dead Zone Report and Consumer Broadband Test.

SECURITY CLASSIFICATION:

The FCC's Security Operations Center (SOC) has not assigned a security classification to this system of records.

SYSTEM LOCATION:

Office of Strategic Planning (OSP), Federal Communications Commission (FCC), 445 12th Street, SW., Washington, DC 20554.

CATEGORIES OF INDIVIDUALS COVERED BY THE SYSTEM:

The categories of individuals in this system include individuals who participate in the Broadband Dead Zone Report voluntary survey and individuals who participate in voluntary Consumer Broadband Test.

CATEGORIES OF RECORDS IN THE SYSTEM:

The categories of records in this system include the street address, city, state, zip code, and the Internet Protocol (IP) address of each individual who selects to participate in the Broadband Dead Zone Report survey and each individual who participates in the Internet service Consumer Broadband Test. Additionally, the Consumer Broadband Test also collects the "Internet Protocol (IP) address" of each user who selects to participate.

AUTHORITY FOR MAINTENANCE OF THE SYSTEM:

Broadband Data Improvement Act of 2008, Public Law 110–385, Stat 4096 section 103(c)(1); American Reinvestment and Recovery Act of 2009 (ARRA), Pub. L. 111–5, 123 Stat 115 (2009); and Communications Act, 47 U.S.C. 154(i).

PURPOSES:

The Commission uses the records in this system collected from the Broadband Dead Zone Report and the Consumer Broadband Test to determine the access of U.S. residents to broadband—cable, and DSL, fiber, mobile wireless, and other broadband services, and to gather data on the quality of the broadband services being provided. The Consumer Broadband Test permits users to measure the quality of their fixed or mobile Internet broadband connection. Individual street addresses and IP addresses will not be made public by the FCC, but aggregated or anonymized data from the database may be made public. Additionally, IP addresses may be shared with FCC software partners as part of the Consumer Broadband Test application. These partners may publish the IP address and broadband performance data to the public (but the IP address will not be associated with a street address). These data may be used to inform implementation of the National Broadband Plan, the National Broadband Map and other proceedings related to the provisioning of broadband services.

ROUTINE USES OF RECORDS MAINTAINED IN THE SYSTEM, INCLUDING CATEGORIES OF USERS AND THE PURPOSES OF SUCH USES:

Information about individuals in this system of records may routinely be disclosed under the following conditions:

1. Where there is an indication of a violation or potential violation of a statute, regulation, rule, or order, records from this system may be referred to the appropriate Federal, State, or local agency responsible for investigating or prosecuting a violation or for implementing or enforcing the statute, rule, regulation, or order.

2. A record on an individual in this system of records may be disclosed, where pertinent, in any legal proceeding to which the Commission is a party before a court or administrative body.

3. A record from this system of records may be disclosed to the Department of Justice or in a proceeding before a court or adjudicative body when:

(a) The United States, the Commission, a component of the Commission, or, when represented by the government, an employee of the Commission is a party to litigation or anticipated litigation or has an interest in such litigation, and

(b) The Commission determines that the disclosure is relevant or necessary to the litigation.

4. A record on an individual in this system of records may be disclosed to a Congressional office in response to an inquiry the individual has made to the Congressional office.

5. A record from this system of records may be disclosed to General Services Administration (GSA) and the National Archives and Records Administration (NARA) for the purpose of records management inspections conducted under authority of 44 U.S.C. 2904 and 2906. Such disclosure shall not be used to make a determination about individuals.

6. A record from this system may be disclosed to appropriate agencies, entities, and persons when (1) the Commission suspects or has confirmed that the security or confidentiality of information in the system of records has been compromised; (2) the Commission has determined that as a result of the suspected or confirmed compromise there is a risk of harm to economic or property interests, identity theft or fraud, or harm to the security or integrity of this system or other systems or programs (whether maintained by the Commission or another agency or entity) that rely upon the compromised information; and (3) the disclosure made to such agencies, entities, and persons is reasonably necessary to assist in connection with the Commission's efforts to respond to the suspected or confirmed compromise and prevent, minimize, or remedy such harm.

7. The information collected through the Broadband Dead Zone Report and Consumer Broadband Test, with the exception of any personally identifiable information (PII), may be shared with public-private partnerships and with the Telecommunications Program of the United States Department of Agriculture (USDA) Rural Development Agency. This sharing regime is described in the Commission's Broadband Data Order of 2008 (FCC 08–89).

8. The information collected through the Broadband Dead Zone Report and Consumer Broadband Test, including the personally identifiable information (PII), may be shared with the National Telecommunications and Information Administration (NTIA) and the 56 State Designated Entities for the State Broadband Data & Development Grant Program, who are tasked with gathering broadband availability information that will be delivered to the FCC and NTIA for compilation into the National Broadband Map. Any PII shared with these entities will be disclosed under the rules of the agreement between NTIA and the state grantees governing the protection of sensitive, protected, or classified data collected pursuant to the grant program. The NTIA and the state grantees will not make any PII publicly available.

In each of these cases, the FCC will determine whether disclosure of the

records is compatible with the purpose for which the records were collected.

DISCLOSURE TO CONSUMER REPORTING AGENCIES:

None.

POLICIES AND PRACTICES FOR STORING, RETRIEVING, ACCESSING, RETAINING, AND DISPOSING OF RECORDS IN THE SYSTEM:

STORAGE:

The information includes the electronic data and records that are stored in the FCC's computer network databases.

RETRIEVABILITY:

Information in the Broadband Dead Zone Report and Consumer Broadband Test system may be retrieved by the responses to the broadband Internet access questions: (1) Broadband access (yes/no); (2) broadband service availability (check boxes for types of broadband services available at an individual's home); (3) the individual's home address: Street address, city, state, and zip code; and (4) the individual's IP address. Furthermore, the information may be retreived and/or aggregated based upon other Consumer Broadband Test variables, such as broadband speed, latency, jitter, and packet loss, among other broadband quality variables.

SAFEGUARDS:

Access to the information in the Broadband Dead Zone Report or the Consumer Broadband Test database, which is housed in the FCC's computer network databases, is restricted to authorized supervisors and staff in the Office of Strategic Planning (OSP) and the Information Technology Center's (ITC) Planning and Support Group, who maintain these computer databases. Additionally, staff of the National Broadband Map may be granted access to this data. Other FCC employees and contractors may be granted access on a "need-to-know" basis. The FCC's computer network databases are protected by the FCC's security protocols, which include controlled access, passwords, and other security features. Information resident on the database servers is backed-up routinely onto magnetic media. Back-up tapes are stored on-site and at a secured, off-site location.

RETENTION AND DISPOSAL:

The information in this system is limited to electronic files, records, and data, which pertains to the Dead Zone Report, which includes:

(1) The information obtained from individuals who participated in the Consumer Information survey; and

(2) The information obtained from individuals who participated in the Consumer Broadband Test.

Until the National Archives and Records Administration (NARA) approves the retention and disposal schedule, these records will be treated as permanent.

SYSTEM MANAGER(S) AND ADDRESS(ES):

Address inquiries to the Office of Strategic Planning (OSP), Federal Communications Commission (FCC), 445 12th Street, SW., Washington, DC 20554.

NOTIFICATION PROCEDURE:

Address inquiries to the Office of Strategic Planning (OSP), Federal Communications Commission (FCC), 445 12th Street, SW., Washington, DC 20554.

RECORD ACCESS PROCEDURES:

Address inquiries to the Office of Strategic Planning (OSP), Federal Communications Commission (FCC), 445 12th Street, SW., Washington, DC 20554.

CONTESTING RECORD PROCEDURES:

Address inquiries to the Office of Strategic Planning (OSP), Federal Communications Commission (FCC), 445 12th Street, SW., Washington, DC 20554.

RECORD SOURCE CATEGORIES:

The sources for the information in this system are the Broadband Dead Zone Report survey respondents and Consumer Broadband Test participants.

EXEMPTIONS CLAIMED FOR THE SYSTEM:

None.

Federal Communications Commission.

Marlene H. Dortch,

Secretary.

[FR Doc. 2010–7988 Filed 4–6–10; 8:45 am]

BILLING CODE 6712–01–P

FEDERAL DEPOSIT INSURANCE CORPORATION

FDIC Advisory Committee on Community Banking; Notice of Meeting

AGENCY: Federal Deposit Insurance Corporation (FDIC).

ACTION: Notice of open meeting.

SUMMARY: In accordance with the Federal Advisory Committee Act, notice is hereby given of a meeting of the FDIC Advisory Committee on Community Banking, which will be held in Washington, DC. The Advisory Committee will provide advice and recommendations on a broad range of policy issues that have a particular impact on community banks throughout the United States and the local communities they serve.

DATES: Wednesday, April 21, 2010, from 8:30 a.m. to 3:30 p.m.

ADDRESS: The meeting will be held in the FDIC Board Room on the sixth floor of the FDIC Building located at 550 17th Street, NW., Washington, DC.

FOR FURTHER INFORMATION CONTACT: Requests for further information concerning the meeting may be directed to Mr. Robert E. Feldman, Committee Management Officer of the FDIC, at (202) 898–7043.

SUPPLEMENTARY INFORMATION:

Agenda: The agenda will include a discussion of supervisory, assessment, consumer protection and/or legislative issues of particular importance to community banks. The agenda may be subject to change. Any changes to the agenda will be announced at the beginning of the meeting.

Type of Meeting: The meeting will be open to the public, limited only by the space available on a first-come, first-served basis. For security reasons, members of the public will be subject to security screening procedures and must present a valid photo identification to enter the building. The FDIC will provide attendees with auxiliary aids (e.g., sign language interpretation) required for this meeting. Those attendees needing such assistance should call (703) 562–6067 (Voice or TTY) at least two days before the meeting to make necessary arrangements. Written statements may be filed with the committee before or after the meeting. This Community Banking Advisory Committee meeting will be Webcast live via the Internet at *http://www.vodium.com/goto/fdic/communitybanking.asp.* This service is free and available to anyone with the following systems requirements: *http://www.vodium.com/home/sysreq.html.* Adobe Flash Player is required to view these presentations. The latest version of Adobe Flash Player can be downloaded at *http://www.adobe.com/shockwave/download/download.cgi?P1_Prod_Version=ShockwaveFlash.* Installation questions or troubleshooting help can be found at the same link. For optimal viewing, a high speed internet connection is recommended. The Community Banking meeting videos are made available on-demand approximately two weeks after the event.

Dated: April 1, 2010.

Federal Deposit Insurance Corporation.

Robert E. Feldman,

Committee Management Officer.

[FR Doc. 2010–7788 Filed 4–6–10; 8:45 am]

BILLING CODE 6714–01–P

FEDERAL ELECTION COMMISSION

[Notice 2010–09]

Filing Dates for the Georgia Special Election in the 9th Congressional District

AGENCY: Federal Election Commission.

ACTION: Notice of filing dates for special election.

SUMMARY: Georgia has scheduled a special general election on May 11, 2010, to fill the U.S. House of Representatives seat in the Ninth Congressional District vacated by Representative Nathan Deal. Under Georgia law, a majority winner in a non-partisan special election is declared elected. Should no candidate achieve a majority vote, a special runoff election will be held on June 8, 2010, between the top two vote-getters.

Political committees participating in the Georgia special elections are required to file pre- and post-election reports. Filing deadlines for these reports are affected by whether one or two elections are held.

FOR FURTHER INFORMATION CONTACT: Mr. Kevin R. Salley, Information Division, 999 E St., NW., Washington, DC 20463; Telephone: (202) 694–1100; Toll Free (800) 424–9530.

SUPPLEMENTARY INFORMATION:

Principal Campaign Committees

All principal campaign committees of candidates who participate in the Georgia Special General and Special Runoff Elections shall file a 12-day Pre-General Report on April 29, 2010; a Pre-Runoff Report on May 27, 2010; and a Post-Runoff Report on July 8, 2010. (See chart below for the closing date for each report).

If only one election is held, all principal campaign committees of candidates in the Special General Election shall file a 12-day Pre-General Report on April 29, 2010; and a Post-General Report on June 10, 2010. (See chart below for the closing date for each report).

Note that these reports are in addition to the campaign committee's quarterly filings in July and October. (See chart below for the closing date for each report).

Unauthorized Committees (PACs and Party Committees)

Political committees filing on a quarterly basis in 2010 are subject to special election reporting if they make previously undisclosed contributions or expenditures in connection with the Georgia Special General Election and/or Special Runoff Election by the close of books for the applicable report(s). (See chart below for the closing date for each report).

Committees filing monthly that make contributions or expenditures in connection with the Georgia Special General Elections will continue to file according to the monthly reporting schedule.

Additional disclosure information in connection with the Georgia Special Elections may be found on the FEC Web site at *http://www.fec.gov/info/report_dates_2010.shtml.*

Disclosure of Lobbyist Bundling Activity

Campaign committees, party committees and Leadership PACs that are otherwise required to file reports in connection with the special elections must simultaneously file FEC Form 3L if they receive two or more bundled contributions from lobbyists/registrants or lobbyist/registrant PACs that aggregate in excess of $16,000 during the special election reporting periods (see charts below for closing date of each period). 11 CFR 104.22(a)(5)(v).

CALENDAR OF REPORTING DATES FOR GEORGIA SPECIAL ELECTION

Report	Close of books [1]	Reg./cert. & overnight mailing deadline	Filing deadline
IF *ONLY* THE SPECIAL GENERAL IS HELD (05/11/10), POLITICAL COMMITTEES INVOLVED MUST FILE:			
Pre-General	04/21/10	04/26/10	04/29/10
Post-General	05/31/10	06/10/10	06/10/10
July Quarterly	06/30/10	07/15/10	07/15/10
IF TWO ELECTIONS ARE HELD, POLITICAL COMMITTEES INVOLVED *ONLY* IN THE SPECIAL GENERAL (05/11/10) MUST FILE:			
Pre-General	04/21/10	04/26/10	04/29/10
July Quarterly	06/30/10	07/15/10	07/15/10
POLITICAL COMMITTEES INVOLVED IN THE SPECIAL GENERAL (05/11/10) AND SPECIAL RUNOFF (06/08/10) MUST FILE:			
Pre-General	04/21/10	04/26/10	04/29/10
Pre-Runoff	05/19/10	05/24/10	05/27/10
Post-Runoff	06/28/10	07/08/10	07/08/10
July Quarterly	.....	[2]	.....
October Quarterly	09/30/10	10/15/10	10/15/10
POLITICAL COMMITTEES INVOLVED ONLY IN THE SPECIAL RUNOFF (06/08/10) MUST FILE:			
Pre-Runoff	05/19/10	05/24/10	05/27/10
Post-Runoff	06/28/10	07/08/10	07/08/10
July Quarterly	.....	[2]	.....
October Quarterly	09/30/10	10/15/10	10/15/10

[1] The reporting period always begins the day after the closing date of the last report filed. If the committee is new and has not previously filed a report, the first report must cover all activity that occurred before the committee registered as a political committee with the Commission up through the close of books for the first report due.

[2] Waived.

Dated: April 1, 2010.
On behalf of the Commission.

Cynthia L. Bauerly,

Vice Chair, Federal Election Commission.

[FR Doc. 2010–7785 Filed 4–6–10; 8:45 am]

BILLING CODE 6715–01–P

FEDERAL RESERVE SYSTEM

Change in Bank Control Notices; Acquisition of Shares of Bank or Bank Holding Companies

The notificants listed below have applied under the Change in Bank Control Act (12 U.S.C. 1817(j)) and § 225.41 of the Board's Regulation Y (12 CFR 225.41) to acquire a bank or bank holding company. The factors that are considered in acting on the notices are set forth in paragraph 7 of the Act (12 U.S.C. 1817(j)(7)).

The notices are available for immediate inspection at the Federal Reserve Bank indicated. The notices also will be available for inspection at the office of the Board of Governors. Interested persons may express their views in writing to the Reserve Bank indicated for that notice or to the offices of the Board of Governors. Comments must be received not later than April 20, 2010.

A. Federal Reserve Bank of Dallas (W. Arthur Tribble, Vice President) 2200 North Pearl Street, Dallas, Texas 75201-2272:

1. Moelis Capital Partners Opportunity Fund I, LP, New York, New York, Moelis Capital Partners Opportunity Fund I-A, LP, New York, New York, Moelis Capital Partners Opportunity Fund, I, LLC, New York, New York, Moelis Capital Partners LLC, New York, New York, Moelis and Company Holdings LLC, New York,New York, Moelis and Company Manager LLC, New York, New York, and Ken Moelis, New York, New York, to acquire more than 10 percent of the shares of Opportunity Bancshares, Inc., Bettendorf, Iowa, and indirectly control Opportunity Bank, NA, Richardson,Texas.

Board of Governors of the Federal Reserve System.

Dated: April 2, 2010.

Robert deV. Frierson,

Deputy Secretary of the Board.

[FR Doc. 2010–7853 Filed 4–6–10; 8:45 am]

BILLING CODE 6210–01–S

FEDERAL MARITIME COMMISSION

Ocean Transportation Intermediary License Applicants

Notice is hereby given that the following applicants have filed with the Federal Maritime Commission an application for license as a Non-Vessel-Operating Common Carrier and Ocean Freight Forwarder—Ocean Transportation Intermediary pursuant to section 19 of the Shipping Act of 1984 as amended (46 U.S.C. Chapter 409 and 46 CFR part 515).

Persons knowing of any reason why the following applicants should not receive a license are requested to contact the Office of Transportation Intermediaries, Federal Maritime Commission, Washington, DC 20573.

Non-Vessel-Operating Common Carrier—Ocean Transportation Intermediary:

HPK Logistics (USA) Inc., 727 Brea Canyon Road, Suite 14, Walnut, CA 91789. *Officers:* Tigi Cai, Vice President/Treasurer (Qualifying Individual) Jian Sun, President.

Cargo Logistics International, LLC, 8761 Dorchester Road, Suite 205, North Charleston, SC 29420. *Officer:* Chad P. Rundle, President (Qualifying Individual).

Non-Vessel-Operating Common Carrier and Ocean Freight Forwarder—Ocean Transportation Intermediary:

OWI Specialized, Inc., 840 Apollo Street, Suite 311, El Segundo, CA 90245, *Officer:* Amitabh VW. Mittal President/CEO/Secretary/Treasurer/CFO/Director (Qualifying Individual).

Elite Logistics Corp., 2100 East 223rd Street, Carson, CA 90810. *Officer:* Moon C. Kang, President/VP/Secretary/CFO (Qualifying Individual).

Everlink Logistics, LLC, 1550 Northbrook Parkway, Suwanee, GA 30024. *Officers:* George Liu, Member/Principal Manager (Qualifying Individual) MiHwa K. Yu, Shareholder.

EJ Trade Logistics LLC, 6304 NW. 97th Avenue, Doral, FL 33178. *Officers:* Joani E. Vieites, Managing Member (Qualifying Individual) Eucario E. Escudero, Managing Member.

Integres Global Logistics, Inc., 10995 Gold Center Drive, Suite 120, Rancho Cordova, CA 95670. *Officers:* David DeBoer, Vice President (Qualifying Individual) Andrew C. Clarke, President/Director.

Pro-Line Shipping, Inc. dba Allied Shipping, 9102 Westpark Drive, Houston, TX 77063. *Officers:* Han aka Tony Liu, Vice President (Qualifying Individual) Richard Tsai, President.

Ocean Freight Forwarder—Ocean Transportation Intermediary:

Dockside Management, Inc. dba Dockside International Forwarders dba, Dockside Maritime Services, 8405 NW. 53th Street, Suite B–222 Miami, FL 33166. *Officers:* Gonzalo Torres, Jr., President/Secretary (Qualifying Individual) Clara M. Faya, Vice President/Treasurer.

Dated: April 2, 2010.

Rachel E. Dickon,

Assistant Secretary.

[FR Doc. 2010–7893 Filed 4–6–10; 8:45 am]

BILLING CODE 6730–01–P

FEDERAL MARITIME COMMISSION

Ocean Transportation Intermediary License Reissuance

Notice is hereby given that the following Ocean Transportation Intermediary licenses have been reissued by the Federal Maritime Commission pursuant to section 19 of the Shipping Act of 1984 (46 U.S.C. Chapter 409) and the regulations of the Commission pertaining to the licensing of Ocean Transportation Intermediaries, 46 CFR part 515.

License No.	Name/address	Date reissued
019880NF	Transmax Logistics Corporation, 830 E. Higgins Road, Suite 111–A, Schaumburg, IL 60173	February 11, 2010.
020479F	Karon Jones dba Keene Machinery and Export, 425 Sandy Lane, Dublin, TX 76446	February 11, 2010.
016886N	Maritrans Shipping, Ltd., 170 East Sunrise Highway, Valley Stream, NY 11581	February 15, 2010.
021932N	Cargolinx Inc., 6405 NW. 36th Street, Suite 107, Miami, FL 33166	February 27, 2010.

Sandra L. Kusumoto,

Director, Bureau of Certification and Licensing.

[FR Doc. 2010–7890 Filed 4–6–10; 8:45 am]

BILLING CODE 6730–01–P

FEDERAL MARITIME COMMISSION

Ocean Transportation Intermediary License Revocation

The Federal Maritime Commission hereby gives notice that the following Ocean Transportation Intermediary licenses have been revoked pursuant to section 19 of the Shipping Act of 1984 (46 U.S.C. Chapter 409) and the regulations of the Commission pertaining to the licensing of Ocean Transportation Intermediaries, 46 CFR part 515, effective on the corresponding date shown below:

License Number: 021331F.

Name: Deseret Forwarding International, Inc.

Address: 1760 Airway, Suite 103, El Paso, TX 79925.

Date Revoked: February 25, 2010.

Reason: Failed to maintain a Valid Bond.

License Number: 004553N.

Name: Marianas Steamship Agencies, Inc. DBA MSA Logistics.

Address: Commercial Port Annex, 2nd Floor, 1010 Cabras Highway, Piti, Guam 96915.

Date Revoked: March 4, 2010.

Reason: Surrendered license voluntarily.

Sandra L. Kusumoto,

Director, Bureau of Certification and Licensing.

[FR Doc. 2010–7888 Filed 4–6–10; 8:45 am]

BILLING CODE 6730–01–P

DEPARTMENT OF HEALTH AND HUMAN SERVICES

Office of the National Coordinator for Health Information Technology HIT Policy Committee Advisory Meeting; Notice of Meeting

AGENCY: Office of the National Coordinator for Health Information Technology, HHS.

ACTION: Notice of change of location for meetings.

This notice references forthcoming meetings of public advisory committees of the Office of the National Coordinator for Health Information Technology (ONC). The meeting will be open to the public.

Name of Committee: HIT Policy Committee; Meaningful Use Workgroup.

General Function of the Committee: to provide recommendations to the National Coordinator on a policy framework for the development and adoption of a nationwide health information technology infrastructure that permits the electronic exchange and use of health information as is consistent with the Federal Health IT Strategic Plan and that includes recommendations on the areas in which standards, implementation specifications, and certification criteria are needed.

Date and Time: The meetings will be held on April 20, 2010, from 9 a.m. to 5 p.m./Eastern Time (the Meaningful Use Workgroup); and April 21, 2010, from 10 a.m. to 4 p.m./Eastern Time (HIT Policy Committee).

Location: The location for both meetings has changed to the Renaissance Dupont Circle Hotel, 1143 New Hampshire Avenue, NW., Washington, DC. The hotel telephone number is 202–775–0800.

Contact Person: Judy Sparrow, Office of the National Coordinator, HHS, 330 C Street, SW., Washington, DC 20201, 202–205–4528, Fax: 202–690–6079, e-mail: *judy.sparrow@hhs.gov* Please call the contact person for up-to-date information on these meetings. A notice in the **Federal Register** about last minute modifications that impact a previously announced advisory committee meeting cannot always be published quickly enough to provide timely notice.

Agenda: The Meaningful Use Workgroup meeting will concern Patient/Consumer Engagement, and hear testimony from experts; the HIT Policy Committee will hear reports from its workgroups, including the Meaningful Use Workgroup, the Certification/Adoption Workgroup, the NHIN Workgroup, the Privacy & Security Policy Workgroup, and the Strategic Plan Workgroup. ONC intends to make background material available to the public no later than two (2) business days prior to the meeting. If ONC is unable to post the background material on its Web site prior to the meeting, it will be made publicly available at the location of the advisory committee meeting, and the background material will be posed on ONC's Web site after the meeting, at *http://healthit.hhs.gov*.

Procedure: Interested persons may present data, information, or views, orally or in writing, on issues pending before the committee. Written submissions may be made to the contact person on or before April 13, 2010. Oral comments from the public will be scheduled between approximately 3:30 p.m. to 4 p.m. Time allotted for each presentation is limited to three minutes. If the number of speakers requesting to comment is greater than can be reasonably accommodated during the scheduled open public hearing session, ONC will take written comments after the meeting until close of business.

Persons attending ONC's advisory committee meetings are advised that the agency is not responsible for providing access to electrical outlets.

ONC welcomes the attendance of the public at its advisory committee meetings. Seating is limited at the location, and ONC will make every effort to accommodate persons with physical disabilities or special needs. If you require special accommodations due to a disability, please contact Judy Sparrow at least seven (7) days in advance of the meeting.

ONC is committed to the orderly conduct of its advisory committee meetings. Please visit our Web site at *http://healthit.hhs.gov* for procedures on public conduct during advisory committee meetings.

Notice of this meeting is given under the Federal Advisory Committee Act (Pub. L. 92–463, 5 U.S.C., App. 2).

Dated: April 1, 2010.

Judith Sparrow,

Office of Programs and Coordination, Office of the National Coordinator for Health Information Technology.

[FR Doc. 2010–7902 Filed 4–6–10; 8:45 am]

BILLING CODE 4150–45–P

DEPARTMENT OF HEALTH AND HUMAN SERVICES

National Institutes of Health

Submission for OMB Review; Comment Request; the Jackson Heart Study (JHS)

Summary: Under the provisions of Section 3507(a)(1)(D) of the Paperwork Reduction Act of 1995, the National Heart, Lung, and Blood Institute (NHLBI), the National Institutes of Health (NIH) has submitted to the Office of Management and Budget (OMB) a request for review and approval the information collection listed below. This proposed information collection was previously published in the **Federal Register** on January 13, 2010, page 1789, and allowed 60 days for public comment. No comments were received. The purpose of this notice is to allow an additional 30 days for public comment. The National Institutes of Health may not conduct or sponsor, and the respondent is not required to respond to, an information collection that has been extended, revised, or implemented

on or after October 1, 1995, unless it displays a currently valid OMB control number.

Proposed Collection: Title: The Jackson Heart Study: Annual Follow-up with Third Party Respondents. *Type of Information Collection Request:* Revision of a currently approved collection (OMB No. 0925–0491). *Need and Use of Information Collection:* This project involves contacting next-of-kin and family physicians of deceased participants who were part of the Jackson Heart Study exam. Interviewers will contact doctors and hospitals to ascertain participants' cardiovascular events. Information gathered will be used to further describe the risk factors, occurrence rates, and consequences of cardiovascular disease in African American men and women. Recruitment of 5,500 JHS participants began in September 2000 and was completed in March 2004. 5,302 participants completed a baseline Exam 1 that included demographics, psychosocial inventories, medical history, anthropometry, resting and ambulatory blood pressure, phlebotomy and 24-hour urine collection, ECG, echocardiography, and pulmonary function. JHS Exam 2 began September 26, 2005, followed by a more comprehensive Exam 3 that began in February 2009. The two new exams include some repeated measures from Exam 1 and several new components, including distribution of self-monitoring blood pressure devices. The continuation of the study allows continued assessment of subclinical coronary disease, left ventricular dysfunction, progression of carotid atherosclerosis and left ventricular hypertrophy, and responses to stress, racism, and discrimination as well as new components such as renal disease, body fat distribution and body composition, and metabolic consequences of obesity.

Frequency of Response: One-time. *Affected Public:* Individuals or households; businesses or other for profit; not-for-profit institutions. *Type of Respondents:* Adults; doctors and staff of hospitals and nursing homes. The annual reporting burden is as follows: *Estimated Number of Respondents:* 400; *Estimated Number of Responses per Respondent:* 1.0; *Average Burden Hours per Response:* (84 hours/400 respondents) 0.20; and *Estimated Total Annual Burden Hours Requested:* 84. The annualized cost to respondents is estimated at $3,760, assuming $15 per burden hour for informants and $65 per burden hour for physicians. There are no Capital Costs to report. There are no Operating or Maintenance Costs to report.

ESTIMATE OF ANNUAL HOUR BURDEN

Type of response	Number of respondents	Frequency of response	Average time per response	Annual hour burden
Morbidity & Mortality AFU 3rd Party/Next-of-kin decedents	200	1	0.17	34
Morbidity & Mortality AFU 3rd Party Physicians	200	1	0.25	50
Total	400			84

Request for Comments: Written comments and/or suggestions from the public and affected agencies should address one or more of the following points: (1) Evaluate whether the proposed collection of information is necessary for the proper performance of the function of the agency, including whether the information will have practical utility; (2) Evaluate the accuracy of the agency's estimate of the burden of the proposed collection of information, including the validity of the methodology and assumptions used; (3) Enhance the quality, utility, and clarity of the information to be collected; and (4) Minimize the burden of the collection of information on those who are to respond, including the use of appropriate automated, electronic, mechanical, or other technological collection techniques or other forms of information technology.

Direct Comments to OMB: Written comments and/or suggestions regarding the item(s) contained in this notice, especially regarding the estimated public burden and associated response time, should be directed to the: Office of Management and Budget, Office of Regulatory Affairs, *OIRA_submission@omb.eop.gov* or by fax to 202–395–6974, Attention: Desk Officer for NIH. To request more information on the proposed project or to obtain a copy of the data collection plans and instruments, contact: Ms. Cheryl Nelson, Project Officer, NIH, NHLBI, 6701 Rockledge Drive, MSC 7934, Bethesda, MD 20892–7934, or call non-toll-free number 301–435–0451 or e-mail your request, including your address to: *NelsonC@nhlbi.nih.gov.*

Comments Due Date: Comments regarding this information collection are best assured of having their full effect if received within 30 days of the date of this publication.

Suzanne Freeman,

NHLBI Project Clearance Liaison, National Institutes of Health.

Michael Lauer,

Director, DCVS, National Institutes of Health.

[FR Doc. 2010–7895 Filed 4–6–10; 8:45 am]

BILLING CODE 4140–01–P

DEPARTMENT OF HEALTH AND HUMAN SERVICES

Indian Health Service

[Funding Announcement Number: HHS–2011–IHS–TMD–0001]

Tribal Management Grant Program; Announcement Type: New and Competing Continuation Discretionary Funding Cycle for Fiscal Year 2011

Catalog of Federal Domestic Assistance Number(s): 93.228.

Key Dates: Program Requirements Session: April 21–22 and May 5–6, 2010.

Grant Writing Session: May 17–21, 2010.

TMG WebEx Session: June 3, 2010.

Application Deadline Date: August 6, 2010.

Receipt Date for Final Tribal Resolution: October 1, 2010.

Review Date: October 4–8, 2010.

Application Notification Date: November 12, 2010.

Earliest Anticipated Start Date: January 1, 2011.

I. Funding Opportunity Description

The Indian Health Service (IHS) announces competitive grant applications for the Tribal Management

Grant (TMG) Program. This program is authorized under 25 U.S.C. 450h(b) and 25 U.S.C. 450h(e) of the Indian Self-Determination and Education Assistance Act (ISDEAA), Public Law (Pub. L.) 93–638, as amended. This program is described at 93.228 in the Catalog of Federal Domestic Assistance (CFDA).

The TMG Program is a national competitive grant program established to assist Federally-recognized Tribes and Tribal organizations in assuming all or part of existing IHS programs, services, functions, and activities (PSFA) through a Title I contract and to assist established Title I contractors and Title V compactors to further develop and improve their management capability. In addition, TMGs are available to Tribes/Tribal organizations under the authority of Public Law 93–638 Section 103(e) for: (1) Obtaining technical assistance from providers designated by the Tribe/Tribal organization (including Tribes/Tribal organizations that operate mature contracts) for the purposes of program planning and evaluation, including the development of any management systems necessary for contract management and the development of cost allocation plans for indirect cost rates; and (2) planning, designing and evaluating Federal health programs serving the Tribe/Tribal organization, including Federal administrative functions.

Funding Priorities: The IHS has established the following funding priorities for TMG awards:

- *Priority I*—Any Indian Tribe that has received Federal recognition (restored, funded, or unfunded) within the past five years, specifically received during or after March 2005.
- *Priority II*—All other eligible Federally-recognized Indian Tribes or Tribally-sanctioned Tribal organizations submitting a competing continuation application or a new application for the sole purpose of addressing audit material weaknesses. The audit material weaknesses are identified in Attachment A of the transmittal letter received from the Office of the Inspector General (OIG), National External Audit Review Center (NEARC), Department of Health and Human Services (HHS). Please identify the material weaknesses to be addressed by underlining the item on Attachment A. Please refer to Section III.3, "Other Requirements," for more information regarding Priority II participation.

Federally-recognized Indian Tribes or Tribally-sanctioned Tribal organizations not subject to Single Audit Act requirements must provide a financial statement identifying the Federal dollars received in the footnotes. The financial statement must also identify specific weaknesses/recommendations that will be addressed in the TMG proposal and are related to 25 CFR Part 900, Subpart F—"Standards for Tribes and Tribal Organizations."

Priority II participation is only applicable to the Health Management Structure project type. For more information *see* Section II, "ELIGIBLE PROJECT TYPES, MAXIMUM FUNDING AND PROJECT PERIODS."

- *Priority III*—All other eligible Federally-recognized Indian Tribes or Tribal organizations submitting a competing continuation application or a new application.

The funding of approved Priority I applicants will occur before the funding of approved Priority II applicants. Priority II applicants will be funded before approved Priority III applicants. Funds will be distributed until depleted.

II. Award Information

Type of Awards: Grant.

Estimated Funds Available: The estimated amount available is $2,669,000 in Fiscal Year (FY) 2011. There will be only one funding cycle in FY 2011. Awards that are issued under this announcement are subject to the availability of funds.

Anticipated Number of Awards: Approximately 20–25 awards will be issued under this grant program.

Project Periods: Varies based on project type from one to three years. Please refer to "ELIGIBLE PROJECT TYPES, MAXIMUM FUNDING AND PROJECT PERIODS" under this section for additional details.

Estimated Award Amount: $50,000/year–$100,000/year. Please refer to "ELIGIBLE PROJECT TYPES, MAXIMUM FUNDING AND PROJECT PERIODS" below for more detailed information.

Eligible Project Types, Maximum Funding and Project Periods: The TMG Program consists of four project types: (1) Feasibility study; (2) planning; (3) evaluation study; and (4) health management structure. Applicants may submit applications for one project type. Applicants must state the project type selected. Applications that address more than one project type will be considered ineligible and will be returned to the applicant. The maximum funding levels noted include both direct and indirect costs. Applicant budgets may not exceed the maximum funding level or project period identified for a project type. Applicants whose budget or project period exceeds the maximum funding level or project period will be deemed ineligible and will not be reviewed. Please refer to Section IV.6. "Funding Restrictions" for further information regarding ineligible activities.

1. *Feasibility Study* (Maximum funding/project period: $70,000/12 months)

The Feasibility Study must include a study of a specific IHS program or segment of a program to determine if Tribal management of the program is possible. The study shall present the planned approach, training, and resources required to assume Tribal management of the program. The study must include the following four components:

- Health needs and health care services assessments that identify existing health care services and delivery system, program divisibility issues, health status indicators, unmet needs, volume projections, and demand analysis.
- Management analysis of existing management structures, proposed management structures, implementation plans and requirements, and personnel staffing requirements and recruitment barriers.
- Financial analysis of historical trends data, financial projections and new resource requirements for program management costs and analysis of potential revenues from Federal/non-Federal sources.
- Decision statement/report that incorporates findings, conclusions and recommendations; the presentation of the study and recommendations to the governing body for Tribal determination regarding whether Tribal assumption of program(s) is desirable or warranted.

2. *Planning* (Maximum funding/project period: $50,000/12 months)

Planning projects entail a collection of data to establish goals and performance measures for the operation of current health programs or anticipated PSFAs under a Title I contract. Planning will specify the design of health programs and the management systems (including appropriate policies and procedures) to accomplish the health priorities of the Tribe/Tribal organization. For example, planning could include the development of a Tribal Specific Health Plan or a Strategic Health Plan, *etc.* Please note: The Public Health Service urges applicants submitting strategic health plans to address specific objectives of Healthy People 2010. Interested applicants may purchase a copy of Healthy People 2010 (Summary Report in print; Stock No. 017–001–00547–9) or CD–ROM (Stock No. 107–001–00549–5) through the

Superintendent of Documents, Government Printing Office, P.O. Box 371954, Pittsburgh, PA 15250–7945, or (202) 512–1800. This information is available in electronic form at the following Web site: *http://www.health.gov/healthypeople/publications.*

3. *Evaluation Study* (Maximum funding/project period: $50,000/12 months)

The Evaluation Study must include a systematic collection, analysis, and interpretation of data for the purpose of determining the value of a program. The extent of the evaluation study could relate to the goals and objectives, policies and procedures, or programs regarding targeted groups. The evaluation study could also be used to determine the effectiveness and efficiency of a Tribal program operation (*i.e.* direct services, financial management, personnel, data collection and analysis, third-party billing, *etc.*) as well as determine the appropriateness of new components to a Tribal program operation that will assist Tribal efforts to improve the health care delivery systems.

4. *Health Management Structure* (Average funding/project period: $100,000/12 months; maximum funding/project period: $300,000/36 months)

The first year maximum is limited to $150,000 for multi-year projects. Health Management Structure allows for implementation of systems to manage or organize PSFAs. Management structures include health department organizations, health boards, and financial management systems including systems for accounting, personnel, third-party billing, medical records, management information systems, *etc.* This includes the design, improvements and correction of management systems that address weaknesses identified through quality control measures, internal control reviews and audit report findings under the Office of Management and Budget (OMB) Circular No. A–133—Revised June 27, 2003, "Audits of States, Local Governments, and Non-Profit Organizations." OMB Circular A–133, Audits of States, Local Governments and Non-Profit Organizations can be found at the following Web site: *http://www.whitehouse.gov/omb/circulars/a133/a133.html.*

25 CFR Part 900, "Indian Self-Determination and Education Assistance Act Amendments," Subpart F—"Standards for Tribal or Tribal Organization Management Systems" sections (900.35–900.60) is available at the following Web site locations: *http://www.access.gpo.gov/nara/cfr/waisidx_04/25cfr900_04.html,* or *http://www.ihs.gov/NonMedicalPrograms/TMG/Forms.asp.*

5. Please *see* Section IV "Application and Submission Information" for information on how to obtain a copy of the TMG application package.

III. Eligibility Information

1. Indian Tribes or Tribal organizations as defined by Public Law 93–638, ISDEAA, as amended. The definitions for each entity type are outlined below. Only one application per Tribe or Tribal organization is allowed. This paragraph should be cross-referenced with Section IV. (Application and Submission Information/Subsection 3, Content and Form of Narrative Submission).

Definitions

Indian Tribe means any Indian Tribe, band, nation, or other organized group or community, including any Alaska Native village, village or regional, or village corporation as defined in or established pursuant to the Alaska Native Claims Settlement Act (85 Stat. 688) [43 U.S.C. 1601 *et seq.*], which is recognized as eligible for the special programs and services provided by the United States to Indians because of their status as Indians. 25 U.S.C. 450b(e).

Tribal organization includes a recognized governing body of any Indian Tribe; any legally established organization of Indians which is controlled, sanctioned, or chartered by such governing body or which is democratically elected by the adult members of the Indian community to be served by such organization and which includes the maximum participation of Indians in all phases of its activities: provided, that in any case where a contract is let or grant made to an organization to perform services benefitting more than one Indian Tribe, the approval of each such Indian Tribe shall be a prerequisite to the letting or making of such contract or grant. 25 U.S.C. 450b(l).

2. *Cost Sharing or Matching*—The TMG Program does not require matching funds or cost sharing. However, in accordance with Public Law 93–638 section 103(c), the TMG funds may be used as matching shares for any other Federal grant programs that develop Tribal capabilities to contract for the administration and operation of health programs.

3. *Other Requirements.*

The following documentation is required:

A. *Tribal Resolution*—A resolution of the Indian Tribe served by the project must accompany the application submission. The IHS will accept the following as proper documentation:

- If an official signed (passed) Tribal resolution encompassing the scope of this grant application is not available for electronic submission with the application on Grants.gov by the deadline, a draft resolution must be submitted as a place holder and as evidence of the intent of the entity. However, the draft resolution must be followed up with the submission of a faxed, FedEx, or e-mailed pdf version of the final official signed Tribal resolution. The final signed resolution must be received by the Division of Grants Operations (DGO) by October 1, 2010. Otherwise, the application will be considered incomplete, ineligible for review, and returned to the applicant without consideration. It is recommended that applicants submitting the signed final resolution should ensure the information was received by the IHS by retaining documentation confirming delivery or receipt (*i.e.* fax transmittal receipt, FedEx tracking, postal return receipt, e-mail receipt, *etc.*).
- An Indian Tribe that is proposing a project affecting another Indian Tribe must include resolutions from all affected Tribes to be served.
- Applications by Tribal organizations will not require a specific Tribal resolution if the current Tribal resolution(s) under which they operate would encompass the proposed grant activities. A copy of that resolution must be provided for review.
- Letter of Authorization per Tribal governance requirements in lieu of a Tribal Resolution will be accepted. Evidence that the Tribe has converted to this means must be provided.
- Tribal organizations applying for technical assistance and/or training grants must submit documentation that the Tribal organization is applying upon the request of the Indian Tribe/Tribes it intends to serve.

B. Documentation for Priority I Participation requires a copy of the **Federal Register** notice or letter from the Bureau of Indian Affairs verifying establishment of Federal Tribal status within the last five years. Date must reflect that Federal recognition was received during or after March 2005.

C. Documentation for Priority II Participation requires a copy of the transmittal letter and Attachment A from the OIG, NEARC, HHS. *See* "FUNDING PRIORITIES" in Section I for more information. If an applicant is unable to locate a copy of their most recent transmittal letter or needs assistance with audit issues,

information or technical assistance may be obtained by contacting the IHS Division of Audit Resolution (DAR) at (301) 443–7301, or the NEARC help line at (800) 732–0679 or (816) 426–7720. The auditor may also have the information/documentation required.

Federally-recognized Indian Tribes or Tribally-sanctioned Tribal organizations not subject to Single Audit Act requirements must provide a financial statement identifying the Federal dollars in the footnotes. The financial statement must also identify specific weaknesses/recommendations that will be addressed in the TMG proposal and that are related to 25 CFR Part 900, "Indian Self-Determination and Education Assistance Act Amendments," Subpart F—"Standards for Tribal and Tribal Organizations."

• Documentation of Consortium Participation—If an Indian Tribe submitting an application is a member of a consortium, the Tribe must:

— Identify the consortium.
— Indicate if the consortium intends to submit a TMG application.
— Demonstrate that the Tribe's application does not duplicate or overlap any objectives of the consortium's application.

• Identify all of the consortium member Tribes.

• Identify if any of the member Tribes intend to submit a TMG application of their own.

• Demonstrate that the consortium's application does not duplicate or overlap any objectives of the other consortium members who may be submitting their own TMG application.

Please refer to Section IV. Application and Submission Information, particularly Item 6 "Funding Restrictions" and Section V. "Application Review Information" for more information regarding other application submission information and/or requirements.

IV. Application and Submission Information

1. The Application Package May Be Found in Grants.gov

(*http://www.grants.gov*) or at: *http://www.ihs.gov/NonMedicalPrograms/gogp/*. The entire grant application package and accompanying instructions are at: *http://www.grants.gov.*

2. IHS Contacts

Programmatic Concerns

Ms. Patricia Spotted Horse, Program Analyst, Office of Direct Service and Contracting Tribes (ODSCT), Indian Health Service, 801 Thompson Avenue, Suite 220, Rockville, Maryland 20852, (301) 443–1104 (Telephone), (301) 443–4666 (Fax), and e-mail address: *Patricia.SpottedHorse@IHS.GOV.*

Business Concerns

Please contact Mr. Pallop Chareonvootitam, Grants Management Specialist, (301) 443–5204 (Telephone), (301) 443–9602 (Fax), and e-mail address: *Pallop.Chareonvootitam@IHS.GOV.*

The Division of Grants Operations (DGO) is the official receipt point for grant applications (electronic and paper). The address for hardcopy applications is as follows: Division of Grants Operations, Indian Health Service, 801 Thompson Avenue, TMP 360, Rockville, Maryland 20852.

GRANTS.GOV Contact for IHS

Information regarding the electronic grants.gov process, issues, and waiver requests may be obtained from the following contact person: Ms. Tammy Bagley, Senior Grants Policy Analyst, Division of Grants Policy (DGP), Indian Health Service, 801 Thompson Avenue, TMP 625, Rockville, Maryland 20852, (301) 443–5204 (Telephone) and e-mail address: *Tammy.Bagley@ihs.gov.*

3. Content and Form of Narrative Submission

• Abstract (one page) summarizing the project.

• Introduction and Need for Assistance.

• Project Objective(s), Approach and Results and Benefits.

• Project Evaluation.

• Organizational Capabilities and Qualifications.

• Be typewritten and single spaced.

• Use black type not smaller than 12 characters per one inch.

• Margins must not be less than one inch.

• Have consecutively numbered pages.

• Contain a narrative that does not exceed 14 typed pages that includes the other submission requirements below. The 14-page narrative does not include the abstract, the work plan, standard forms, Tribal resolution(s), table of contents, budget, budget justifications, multi-year narratives, multi-year budget, multi-year budget justification, and/or other appendix items.

Public Policy Requirements: All Federal-wide public policies apply to IHS grants with exception of Lobbying and Discrimination policy.

4. Submission Dates and Times

Applications are to be submitted electronically through Grants.gov on Friday, August 6, 2010 by 12 midnight Eastern Standard Time (EST). Any application received after the application deadline will not be accepted for processing and will be returned to the applicants without further consideration for funding.

If technical challenges arise and the applicant needs help with the electronic application process, contact Grants.gov Customer Support via e-mail at *support@grants.gov* or at (800) 518–4726. Customer support is available to address questions 24 hours a day, 7 days a week (except on Federal holidays). If problems persist, contact Ms. Tammy Bagley, Senior Grants Policy Analyst, (DGP) at *Tammy.Bagley@ihs.gov* or (301) 443–5204 at least 10 days prior to the application deadline. Please do not call Ms. Bagley until you have received a Grants.gov tracking number. All waiver requests must be made in writing (e-mails are acceptable). A written approval must be obtained from the DGP before submitting a paper application. A copy of the written approval must be submitted along with the hardcopy that is mailed to the DGO (Refer to Section IV to obtain the mailing address), Attention: Ms. Kimberly Pendleton. The DGO requires a hardcopy of the original application and two copies. Paper applications that are submitted without proof of an approved waiver will be returned to the applicant. Late applications will not be accepted for processing and will be returned to the applicant without further consideration for funding.

5. Intergovernmental Review

Executive Order 12372 requiring intergovernmental review is not applicable to this program.

6. Funding Restrictions

• Pre-award costs are not allowable.

• The available funds are inclusive of direct and indirect costs.

• Only one grant will be awarded per applicant.

• The TMG may not be used to support recurring operational programs or to replace existing public and private resources. Funding received under a recurring Public Law 93–638 contract cannot be totally supplanted or totally replaced. Exception is allowed to charge a portion or percentage of salaries of existing staff positions involved in implementing the TMG grant if applicable.

• Ineligible Project Activities

The inclusion of the following projects or activities in an application will render the application ineligible and the application will be returned to the applicant:

—Planning and negotiating activities associated with the intent of a Tribe to enter the IHS Self-Governance Project. A separate grant program is administered by the IHS for this purpose. Prospective applicants interested in this program should contact Ms. Dawn Houle, Policy Analyst, Office of Tribal Self-Governance, Indian Health Service, Reyes Building, 801 Thompson Avenue, Suite 240, Rockville, Maryland 20852, (301) 443–7821, and request information concerning the "Tribal Self-Governance Program Planning Cooperative Agreement Announcement" or the "Negotiation Cooperative Agreement Announcement."

—Projects related to water, sanitation, and waste management.

— Projects that include direct patient care and/or equipment to provide those medical services to be used to establish or augment or continue direct patient clinical care are not allowable. Medical equipment that is allowable under the Special Diabetes Grant Program is not allowable under the TMG Program. This also includes recruitment efforts for direct patient care services.

—Projects that include long-term care or provision of any direct services. Projects that include tuition, fees, or stipends for certification or training of staff to provide direct services.

—Projects that include pre-planning, design, and planning of construction for facilities, including activities relating to program justification documents.

—Projects that propose more than one project type. Please *see* Section II, "Award Information," specifically "ELIGIBLE PROJECT TYPES, MAXIMUM FUNDING AND PROJECT PERIODS" for more information. An example of a proposal with more than one project type that would be considered ineligible may include the creation of a strategic health plan (defined by TMG as a planning project type) and improving third-party billing structures (defined by TMG as a health management structure project type). Multi-year applications that include in the first year planning, evaluation or feasibility activities with the remainder of the project years addressing management structure are also deemed ineligible.

• *Other Limitations*—A current TMG recipient cannot be awarded a new, renewal, or competing continuation grant for any of the following reasons:

—A grantee may not administer two TMGs at the same time or have overlapping project/budget periods (however, allowance will be made to accommodate the completion of one TMG grant prior to beginning a new award, if applicable);

—The current project is not progressing in a satisfactory manner;

— The current project is not in compliance with program and financial reporting requirements; or

— *Delinquent Federal Debts:* No award shall be made to an applicant who has an outstanding delinquent Federal debt until either:

— The delinquent account is paid in full; or

— A negotiated repayment schedule is established and at least one payment is received.

7. Other Submission Requirements

Electronic Submission—The preferred method for receipt of applications is electronic submission through Grants.gov. **Note:** All IHS application packages are posted in Adobe. Therefore, please make sure that your entity uses a compatible version to save and submit the application or submission errors will occur. Should any technical challenges arise regarding the submission, please contact Grants.gov Customer Support at (800) 518–4726 or *support@grants.gov.* The Contact Center hours of operation are 24 hours a day, 7 days a week. The contact center is closed on Federal holidays.

Applicants that do not adhere to the timelines for Central Contractor Registry (CCR) and/or Grants.gov registration and/or request timely assistance from DGP or Grants.gov will not be a candidate to obtain a waiver from the electronic process. Applicants must plan ahead.

To submit an application electronically, please use the *http://www.Grants.gov* "Apply for Grants" link on the homepage. Download a copy of the application package on the Grants.gov Web site, complete it offline and then upload and submit the application via the Grants.gov site. You may not e-mail an electronic copy of a grant application to IHS.

Please be reminded of the following:

• Paper applications are not the preferred method. However, if you have technical problems submitting your application on-line, please contact directly Grants.gov Customer Support at: *http://www.Grants.gov/CustomerSupport.*

• Upon contacting Grants.gov, obtain a tracking number as proof of contact. The tracking number is helpful if there are technical issues that cannot be resolved and a waiver request from Grants Policy must be obtained.

• Upon entering the Grants.gov site, there is available information that outlines the requirements to the applicant regarding electronic submission of an application through Grants.gov, as well as the hours of operation.

• Applicants are strongly encouraged not to wait until the deadline date to begin the application process through Grants.gov as the registration process for CCR and Grants.gov could take up to fifteen working days.

• In order to use Grants.gov, you, as the applicant, must have a Data Universal Numbering System (DUNS) number and must register in the CCR. You should allow a minimum of ten working days to complete CCR registration. *See* below on how to apply.

• You must submit all documents electronically, including all information typically included on the SF–424, Application for Federal Assistance, and all necessary assurances and certifications.

• Please use the optional attachment feature in Grants.gov to attach additional documentation that may be requested by IHS.

• Final signed Tribal resolutions must be submitted no later than October 1, 2010, if a draft resolution was submitted with the initial electronic or paper application.

• The narrative section of your application cannot exceed the 14-page limitation requirements described in the program announcement.

• After you electronically submit your application, you will receive an automatic acknowledgment from Grants.gov that contains a Grants.gov tracking number. The IHS DGO will retrieve your application from Grants.gov. The DGO will not notify applicants that the application has been received.

• You must search for the downloadable application package utilizing Grants.gov FIND to search for the CFDA number 93.228.

DUNS Number

Applicants are required to obtain a DUNS number from Dun and Bradstreet to apply for a grant or cooperative agreement from the Federal Government. The DUNS number is a nine-digit identification number, which uniquely identifies business entities. Obtaining a DUNS number is easy and there is no charge. To obtain a DUNS number, access *http://www.dnb.com/us/ or* call (866) 705–5711. Interested parties may wish to obtain their DUNS number by phone to expedite the process.

Applicants who intend to submit electronically must also be registered with the CCR. A DUNS number is required before CCR registration can be completed. Many organizations may already have a DUNS number. Please use the number listed above to investigate whether or not your organization has a DUNS number. Registration with the CCR is free of charge.

Applicants may register by calling (866) 606–8220. Please review and complete the CCR Registration Worksheet located on *http://www.Grants.gov/CCRRegister.*

More detailed information regarding these registration processes can be found at *http://www.Grants.gov.*

V. Application Review Information

The instructions for preparing the application narrative also constitute the evaluation criteria for reviewing and scoring the application. Weights assigned to each section are noted in parentheses. The 14-page narrative should include only the first year of activities; and information for multi-year projects should be included as an appendix. *See* "MULTI-YEAR PROJECT REQUIREMENTS" at the end of this section for more information.

1. Abstract—One Page Summary

A. Criteria

INTRODUCTION AND NEED FOR ASSISTANCE (20 Points)

(1) Describe the Tribe's/Tribal organization's current health operation. Include what programs and services are currently provided (*i.e.,* Federally funded, State funded, *etc.*), information regarding technologies currently used (*i.e.,* hardware, software, services, *etc.*), and identify the source(s) of technical support for those technologies (*i.e.,* Tribal staff, Area Office, vendor, *etc.*). Include information regarding whether the Tribe/Tribal organization has a health department and/or health board and how long it has been operating.

(2) Describe the population to be served by the proposed project. Include a description of the number of IHS eligible beneficiaries who currently use services.

(3) Describe the geographic location of the proposed project including any geographic barriers to the health care users in the area to be served.

(4) Identify all TMGs received since FY 2005, dates of funding and summary of project accomplishments. State how previous TMG funds facilitated the progression of health development relative to the current proposed project. (Copies of reports will not be accepted.)

(5) Identify the eligible project type and priority group of the applicant.

(6) Explain the reason for your proposed project by identifying specific gaps or weaknesses in services or infrastructure that will be addressed by the proposed project. Explain how these gaps/weaknesses were discovered. If the proposed project includes information technology (*i.e.,* hardware, software, *etc.*), provide further information regarding measures taken or to be taken that ensure the proposed project will not create other gaps in services or infrastructure (*i.e.,* IHS interface capability, Government Performance and Results Act reporting requirements, contract reporting requirements, Information Technology (IT) compatibility, *etc.*).

(7) Describe the effect of the proposed project on current programs (*i.e.,* Federally funded, State funded, *etc.*) and, if applicable, on current equipment (*i.e.,* hardware, software, services, *etc.*). Include the effect of the proposed project on planned/anticipated programs and/or equipment.

(8) Address how the proposed project relates to the purpose of the TMG Program by addressing the appropriate description that follows:

- Identify if the Tribe/Tribal organization is an IHS Title I contractor. Address if the self-determination contract is a master contract of several programs or if individual contracts are used for each program. Include information regarding whether or not the Tribe participates in a consortium contract (*i.e.,* more than one Tribe participating in a contract). Address what programs are currently provided through those contracts and how the proposed project will enhance the organization's capacity to manage the contracts currently in place.
- Identify if the Tribe/Tribal organization is an IHS Title V compactor. Address when the Tribe/Tribal organization entered into the compact and how the proposed project will further enhance the organization's management capabilities.
- Identify if the Tribe/Tribal organization is not a Title I or Title V organization. Address how the proposed project will enhance the organization's management capabilities, what programs and services the organization is currently seeking to contract and an anticipated date for contract.

PROJECT OBJECTIVE(S), WORKPLAN AND CONSULTANTS (40 Points)

A. Identify the proposed project objective(s) addressing the following:

- Measurable and (if applicable) quantifiable.
- Results oriented.
- Time-limited.

Example: By installing new software, the Tribe will increase the number of bills processed by 15 percent at the end of 12 months.

B. Address how the proposed project will result in change or improvement in program operations or processes for each proposed project objective. Also address what tangible products are expected from the project (*i.e.* policies and procedures manual, health plan, *etc.*).

C. Address the extent to which the proposed project will build the local capacity to provide, improve, or expand services that address the need(s) of the target population.

D. Submit a workplan in the appendix which includes the following information:

- Provide the action steps on a timeline for accomplishing the proposed project objective(s).
- Identify who will perform the action steps.
- Identify who will supervise the action steps taken.
- Identify who will accept and/or approve work products at the end of the proposed project.
- Include any training that will take place during the proposed project and who will be attending the training.
- Include evaluation activities planned.

E. If consultants or contractors will be used during the proposed project, please include the following information in their scope of work (or note if consultants/contractors will not be used):

- Educational requirements.
- Desired qualifications and work experience.
- Expected work products to be delivered on a timeline.

If a potential consultant/contractor has already been identified, please include a resume in the Appendix.

F. Describe what updates (*i.e.,* revision of policies/procedures, upgrades, technical support, *etc.*) will be required for the continued success of the proposed project. Include when these updates are anticipated and where funds will come from to conduct the update and/or maintenance.

PROJECT EVALUATION (15 Points)

Describe the proposed plan to evaluate both outcomes and process. Outcome evaluation relates to the results identified in the objectives, and process evaluation relates to the workplan and activities of the project.

A. For outcome evaluation, describe:

• What will the criteria be for determining success of each objective?
• What data will be collected to determine whether the objective was met?
• At what intervals will data be collected?
• Who will collect the data and their qualifications?
• How will the data be analyzed?
• How will the results be used?

B. For process evaluation, describe:
• How will the project be monitored and assessed for potential problems and needed quality improvements?
• Who will be responsible for monitoring and managing project improvements based on results of ongoing process improvements and their qualifications?
• How will ongoing monitoring be used to improve the project?
• Describe any products, such as manuals or policies, that might be developed and how they might lend themselves to replication by others.
• How will the organization document what is learned throughout the project period?

C. Describe any evaluation efforts planned after the grant period has ended.

D. Describe the ultimate benefit to the Tribe that is expected to result from this project. An example of this might be the ability of the Tribe to expand preventive health services because of increased billing and third party payments.

ORGANIZATIONAL CAPABILITIES AND QUALIFICATIONS (15 Points)

A. Describe the organizational structure of the Tribe/Tribal organization beyond health care activities.

B. Provide information regarding plans to obtain management systems if the Tribe/Tribal organization does not have an established management system currently in place that complies with 25 CFR Part 900, Subpart F, "Standards for Tribal Management Systems." If management systems are already in place, simply state it and how long the systems have been in place.

C. Describe the ability of the organization to manage the proposed project. Include information regarding similarly sized projects in scope and financial assistance as well as other grants and projects successfully completed.

D. Describe what equipment (*i.e.,* fax machine, phone, computer, *etc.*) and facility space (*i.e.,* office space) will be available for use during the proposed project. Include information about any equipment not currently available that will be purchased through the grant.

E. List key personnel who will work on the project. Include all titles of key personnel in the workplan. In the appendix, include position descriptions and resumes for all key personnel. Position descriptions should clearly describe each position and duties, indicating desired qualifications and experience requirements related to the proposed project. Resumes must indicate that the proposed staff member is qualified to carry out the proposed project activities. If a position is to be filled, indicate that information on the proposed position description.

F. If the project requires additional personnel (*i.e.,* IT support, *etc.*), address how the Tribe/Tribal organization will sustain the position(s) after the grant expires. (If there is no need for additional personnel, simply state it.)

CATEGORICAL BUDGET AND BUDGET JUSTIFICATION (10 Points)

A. Provide a categorical budget for each of the 12-month budget periods requested.

B. If indirect costs are claimed, indicate and apply the current negotiated rate to the budget. Include a copy of the rate agreement in the appendix.

C. Provide a narrative justification explaining why each categorical budget line item is necessary/relevant to the proposed project. Include sufficient cost and other details to facilitate the determination of cost allowability (*i.e.,* equipment specifications, *etc.*).

Multi-Year Project Requirements

For projects requiring a second and/or third year, include only Year 2 and/or Year 3 narrative sections (objectives, evaluation components and work plan) that differ from those in Year 1. For every project year include a full budget justification and detailed, itemized categorical budget showing calculation methodologies for each item. The same weights and criteria which are used to evaluate a one-year project or the first year of a multi-year project will be applied when evaluating the second and third years of a multi-year application. Refer to Section V. Application Review Information. A weak second and/or third year submission could negatively impact the overall score of an application and result in elimination of the proposed second and/or third years with a recommendation for only a one-year award.

Appendix Items

A. Work plan for proposed objectives.
B. Position descriptions for key staff.
C. Resumes of key staff that reflect current duties.
D. Consultant proposed scope of work (if applicable).
E. Indirect Cost Rate Agreement.
F. Organizational chart (optional).
G. Multi-Year Project Requirements (if applicable).

2. Review and Selection Process

In addition to the above criteria/requirements, applications are considered according to the following:

A. Application Submission (Application Deadline: August 6, 2010)

Applications received in advance of or by the deadline and verified by the tracking number will be prescreened by DGO staff for eligibility and completeness to confirm that:
• The applicant and proposed project type is eligible in accordance with this grant announcement;
• The application is not a duplication of a previously funded project; and
• The application narrative, forms, and materials submitted meet the requirements of the announcement allowing the review panel to undertake an in-depth evaluation; otherwise the application will be deemed incomplete and ineligible and will be returned. Ineligible applications are not reviewed but will receive a letter of ineligibility and explanation from the DGO.

B. Competitive Review of Eligible Applications (Objective Review: October 4–8, 2010)

Applications meeting eligibility requirements that are complete, responsive and conform to this program announcement will be reviewed for merit using an Ad Hoc Objective Review Committee (ORC) appointed by the ODSCT to review and make recommendations on these applications. The review will be conducted in accordance with the HHS Objective Review Guidelines. The technical review process ensures selection of quality projects in a national competition for limited funding. Applications will be evaluated and scored on the basis of the evaluation criteria listed in Section V.1. The criteria are used to evaluate the quality of a proposed project, determine the likelihood of success and to assign a numerical score to each application. The scoring of approved applications will assist the IHS in ranking the proposals and determining which proposals will be funded and reviewed by the DGO for cost analysis and further recommendation. All applications that are reviewed and that receive a score of 60 points or above will be ranked and recommended for funding. All awards that are issued under this

announcement are subject to the availability of funds. The program official accepts the DGO recommendations for consideration when funding applications. The program official will forward the final approved ranking list to the Director, ODSCT, for final review and approval. Applications that score below 60 points will be disapproved. Applications that are approved but not funded due to budgetary constraints will not be carried over into the next cycle for funding consideration.

3. Anticipated Announcement and Award Dates

The earliest award start date will be January 1, 2011.

VI. Award Administration Information

1. Award Notices

ORC Results Notification: November 12, 2010.

Applicants whose applications are declared ineligible will receive written notification from the DGO of the ineligibility determination. The ineligible notification will include information regarding the rationale for the ineligible decision citing specific information from the original grant application. Those applicants who are approved and recommended for funding, approved but unfunded and those who are disapproved will receive a copy of the Executive Summary which identifies the weaknesses and strengths of the application submitted. Applicants who are approved and recommended for funding will be notified through the official Notice of Award (NoA) document issued by the DGO. The NoA will be signed by the Grants Management Officer and is the authorizing document for notifying grant recipients of funding. The NoA will state the amount of Federal funds awarded, the purpose of the grant, the terms and conditions that govern the grant award, the effective date of the award, the project period, and the budget period. Pre-award costs are not allowable charges under this program grant.

2. Administrative Requirements

Grants are administrated in accordance with the following regulations, policies, and Office of Management and Budget (OMB) cost principles:

A. The Criteria as Outlined in This Funding Opportunity Announcement

B. Administrative/Program Regulations for Grants

- *45 CFR Part 92*—Uniform Administrative Requirements for Grants and Cooperative Agreements to State, Local and Tribal Governments.
- *45 CFR Part 74*—Uniform Administrative Requirements for Awards and Sub-awards to Institutions of Higher Education, Hospitals, Other Non-Profit Organizations, and Commercial Organizations.
- *42 CFR Part 136*—Indian Health.

C. Grants Policy

- HHS Grants Policy Statement, Revised 01/2007.

D. Cost Principles

- *OMB Circular A–87*—State, Local, and Indian Tribal Governments (Title 2 Part 225).
- *OMB Circular A–122*—Non-Profit Organizations (Title 2 Part 230).

E. Audit Requirements

- *OMB Circular A–133*—Audits of States, Local Governments, and Non-Profit Organizations.

3. Indirect Costs

This section applies to all grant recipients that request indirect costs in their application. In accordance with HHS Grants Policy Statement, Part II–27, IHS requires applicants to have a current indirect cost rate agreement in place prior to award. The rate agreement must be prepared in accordance with the applicable cost principles and guidance as provided by the cognizant agency or office. A current rate means the rate covering the applicable activities and the award budget period. If the current rate is not on file with the awarding office, the award shall include funds for reimbursement of indirect costs. However, the indirect cost portion will remain restricted until the current rate is provided to the DGO.

Generally, indirect costs rates for IHS are negotiated with two cognizant agencies; the Division of Cost Allocation (DCA)/HHS *http://rates.psc.gov/*and National Business Center (NBC)/ Department of the Interior *http://www.aqd.nbc.gov/Services/ICS.aspx*. If your organization has questions regarding the indirect cost policy, please contact the DGO at (301) 443–5204.

4. Reporting

A. *Progress Report.* Program progress reports will be required semi-annually. Semi-annual program progress reports must be submitted within 30 days of the conclusion of the first six months of the budget period and again at the end of the budget period. These reports will include a brief comparison of actual accomplishments to the goals established for the period, reasons for slippage (if applicable), and other pertinent information as required. A final report must be submitted within 90 days of expiration of the budget/project period.

B. *Financial Status Reports.* Financial status reports will be required semi-annually. Semi-annual financial status reports must be submitted within 30 days after the reporting period ends. Final financial status reports are due within 90 days of expiration of the budget/project period. Standard Form 269 (long form) will be used for financial reporting.

C. *Reports.* Grantees are responsible and accountable for accurate and timely reporting of the Progress Reports and Financial Status Reports which are generally due semi-annually. Financial Status Reports (SF–269) are due 90 days after each budget period and the final SF–269 must reflect an accumulative total of all expenditures and authorizations for the life of the project. Grantees must refer to the terms and conditions of their award to obtain details regarding their reporting requirements. Grantees are required to contact their Grants Management Specialist with any questions regarding reporting requirements.

Failure to submit required reports within the time allowed may result in suspension or termination of an active grant, withholding of additional awards for the project, or other enforcement actions such as withholding of payments or converting to the reimbursement method of payment. Continued failure to submit required reports may result in one or both of the following: (1) The imposition of special award provisions; and (2) the non-funding or non-award of other eligible projects or activities. This applies whether the delinquency is attributable to the failure of the grantee organization or the individual responsible for preparation of the reports.

VII. Agency Contact(s)

Interested parties may obtain TMG programmatic information from the TMG Program Coordinator listed under Section IV of this program announcement. Grant-related and business management information may be obtained from the Grants Management Specialist listed under Section IV of this program announcement. Grants.gov submission concerns and waiver requests may be

addressed by Ms. Tammy Bagley, DGP. Contact information is noted under Section IV of this program announcement. Please note that the telephone numbers provided are not toll-free.

VIII. Other Information

Training

The TMG Program official will conduct pre-award training sessions to provide limited technical assistance to applicants in preparing their FY 2011 TMG applications. There will be two 2-day training sessions. In addition, there will be one 5-day training session on Grantsmanship. The 5-day training session will provide participants with basic grant writing skills, information regarding where to search for funding opportunities, and the opportunity to begin writing a TMG grant proposal. The 2-day training sessions will focus specifically on the TMG requirements providing participants with information contained in this announcement, clarifying any issues/questions applicants may have and critiquing project ideas. Also, a half-day WebEx focusing on TMG program requirements will be conducted on June 3, 2010.

Priority will be given to groups eligible to apply for the TMG Program. Participation is limited to two personnel from each Tribe or Tribal organization. All sessions are first come–first serve with the above limitations noted. All participants are responsible for making and paying for their own travel arrangements. Interested parties should register with the TMG staff prior to making travel arrangements to ensure space is available in the selected session. There is no registration fee to attend the training session(s). The registration form may be obtained from the TMG Web site at: *http://www.ihs.gov/NonMedicalPrograms/tmg/Training.asp.* The registration form may be faxed to (301) 443–4666. **Note:** A minimum of ten attendees is required for the IHS to conduct the training sessions. The anticipated training dates and locations are listed below in chronological order:

- April 21–22, 2010—Rockville, MD (Limit 30) (TMG Training).
- May 5–6, 2010—Minneapolis, MN (Limit 25) (TMG Training).
- May 17–21, 2010—Albuquerque, New Mexico (Limit 25) (The Grantsmanship Center Training).
- June 3, 2010—Two-Hour WebEx (Limit 50) (TMG Training).

IHS Checklist

The following IHS Checklist is included to assist applicants in proposal preparation and follow-up. Applicants are highly encouraged to employ this checklist for their benefit and to submit it as part of their proposal as an attachment in Grants.gov to allow for verification of receipt. This checklist will be utilized by the DGO during their initial screening for eligibility and will be utilized by the ODSCT during their programmatic review for content of the application to ensure required items requested are submitted and the application is eligible for further review via the ORC. This checklist is available on the TMG Web site at *http://www.ihs.gov/NonMedicalPrograms/tmg/.*

IHS FY 2011 Tribal Management Grant Application Checklist

Applicant Name:_____

Application Tracking Number:_____

Electronic Submission:_____ Signed Paper Submission:_____ Waiver Obtained:_____

Title I:_____ Title V:_____ Project Type:_____

Item	Applicant	Grants	Programs
1. IHS FY 2011 TMG Checklist			
2. Eligibility: (circle) Tribe Tribal Organization			
3. 501c(3) Non-Profit Organization			
4. Tribal Resolution or Letter of Authorization (as defined in the announcement)			
a. Final signed Tribal Resolution is due on or before October 1, 2010			
b. Draft unsigned resolution is due August 6, 2010 (if applicable)			
5. Priority I Documentation (if applicable)			
6. Priority II Documentation (if applicable)			
7. Consortium Participation Documentation (if applicable)			
8. SF 424 Application for Federal Assistance			
9. SF 424A Budget - Non Construction			
10. SF 424B Assurances			
11. Disclosure of Lobbying Activities			
12. Abstract			
13. Project Narrative Items a. - e. (14 pages maximum)			
a. Introduction and Need for Assistance.			
b. Project Objective(s), Workplan & Consultants.			
c. Project Evaluation.			
d. Organizational Capabilities and Qualifications.			
e. Categorical Budget & Budget Justification.			
14. Multi-year Summary & Budget Justification			
15. APPENDICES			
a. Work plan for proposed objectives.			
b. Position descriptions for key staff.			
c. Resumes of key staff that reflect current duties.			
d. Consultant proposed scope of work (if applicable).			
e. Indirect Cost Rate Agreement.			
f. Organizational chart (optional).			
g. Multi-Year Project Requirements (if applicable).			

Applicant Signature/Date:_____

Grants Management Signature/Date:_____

Program Office Signature/Date: _____

The Public Health Service (PHS) strongly encourages all grant and contract recipients to provide a smoke-free workplace and promote the non-use of all tobacco products. In addition, Public Law 103–227, the Pro-Children Act of 1994, prohibits smoking in certain facilities (or in some cases, any portion of the facility) in which regular or routine education, library, day care, health care or early childhood development services are provided to children. This is consistent with the HHS mission to protect and advance the physical and mental health of the American people.

Dated: March 30, 2010.

Yvette Roubideaux,

Director, Indian Health Service.

[FR Doc. 2010–7790 Filed 4–6–10; 8:45 am]

BILLING CODE 4165–16–P

DEPARTMENT OF HEALTH AND HUMAN SERVICES

Centers for Disease Control and Prevention

Board of Scientific Counselors, National Center for Health Statistics, (BSC, NCHS)

In accordance with section 10(a)(2) of the Federal Advisory Committee Act (Pub. L. 92–463), the Centers for Disease Control and Prevention (CDC), National Center for Health announces the following meeting of the aforementioned committee:

Times and Dates: 11 a.m.–5:30 p.m., April 22, 2010. 8:30 a.m.–2 p.m., April 23, 2010.

Place: NCHS Headquarters, 3311 Toledo Road, Hyattsville, Maryland 20782.

Status: This meeting is open to the public; however, visitors must be processed in accordance with established Federal policies and procedures. For foreign nationals or non-US citizens, pre-approval is required (please contact Althelia Harris, 301–458–4261, *adw1@cdc.gov* or Virginia Cain, *vcain@cdc.gov* at least 10 days in advance for requirements). All visitors are required to present a valid form of picture identification issued by a State, Federal or international government. As required by the Federal Property Management Regulations, Title 41, Code of Federal Regulation, Subpart 101–20.301, all persons entering in or on Federal controlled property and their packages, briefcases, and other containers in their immediate possession are subject to being x-rayed and inspected. Federal law prohibits the knowing possession or the causing to be present of firearms, explosives and other dangerous weapons and illegal substances. The meeting room accommodates approximately 100 people.

Purpose: This committee is charged with providing advice and making recommendations to the Secretary, Department of Health and Human Services; the Director, CDC; and the Director, NCHS, regarding the scientific and technical program goals and objectives, strategies, and priorities of NCHS.

Matters To Be Discussed: The agenda will include welcome remarks by the Director, NCHS; review of the National Survey of Family Growth program; and an open session for comments from the public.

Requests to make oral presentations should be submitted in writing to the contact person listed below. All requests must contain the name, address, telephone number, and organizational affiliation of the presenter.

Written comments should not exceed five single-spaced typed pages in length and must be received by April 15, 2010.

The agenda items are subject to change as priorities dictate.

Contact Person for More Information: Virginia S. Cain, PhD, Director of Extramural Research, NCHS/CDC, 3311 Toledo Road, Room 7211, Hyattsville, Maryland 20782, telephone (301) 458–4500, fax (301) 458–4020.

The Director, Management Analysis and Services Office, has been delegated the authority to sign **Federal Register** notices pertaining to announcements of meetings and other committee management activities for both CDC and the Agency for Toxic Substances and Disease Registry.

Dated: March 30, 2010.

Elaine L. Baker,

Management Analysis and Services Office, Centers for Disease Control and Prevention.

[FR Doc. 2010–7800 Filed 4–6–10; 8:45 am]

BILLING CODE 4163–18–P

DEPARTMENT OF HOMELAND SECURITY

Coast Guard

[Docket No. USCG–2010–0160]

Certificate of Alternative Compliance for the Lift Boat GARY CHIASSON ELEVATOR

AGENCY: Coast Guard, DHS.

ACTION: Notice.

SUMMARY: The Coast Guard announces that a Certificate of Alternative Compliance was issued for the lift boat GARY CHIASSON ELEVATOR as required by 33 U.S.C. 1605(c) and 33 CFR 81.18.

DATES: The Certificate of Alternate Compliance was issued on March 1, 2010.

ADDRESSES: The docket for this notice is available for inspection or copying at the Docket Management Facility (M–30), U.S. Department of Transportation, West Building Ground Floor, Room W12–140, 1200 New Jersey Avenue SE., Washington, DC 20590, between 9 a.m. and 5 p.m., Monday through Friday, except Federal holidays. You may also find this docket on the Internet by going to *http://www.regulations.gov,* inserting USCG–2010–0160 in the "Keyword" box, and then clicking "Search."

FOR FURTHER INFORMATION CONTACT: If you have questions on this notice, call CWO2 David Mauldin, District Eight, Prevention Branch, U.S. Coast Guard, telephone 504–671–2153. If you have questions on viewing or submitting material to the docket, call Renee V. Wright, Program Manager, Docket Operations, telephone 202–366–9826.

SUPPLEMENTARY INFORMATION:

Background and Purpose

A Certificate of Alternative Compliance, as allowed under Title 33 of the Code of Federal Regulations, Parts 81 and 89, has been issued for the lift boat GARY CHIASSON ELEVATOR. The Certificate of Alternative Compliance permits the masthead light to be offset from the centerline 6′ to port. Placing the masthead light on the centerline as required by Rule 21 (a) of 72 COLREGS, and Rule 21 (a) of the Inland Rules Act, would result in a masthead light obstructed by the forward leg of the lift boat. In addition the sidelights may be located on the outermost edges of the top of the pilothouse. Due to the pilothouse being offset to port, the sidelights will also be offset to port. The port sidelight will be located 16.5′ from the centerline and the starboard sidelight will be located 11.5′ from the centerline. Both sidelights will be located greater than 10% inboard the greatest breadth of the vessel and 19′ forward of the masthead light. Placing the sidelights in the locations required by Annex I, paragraph 3(b) of 72 COLREGS, and Annex I, paragraph 84.05(b) of the Inland Rules Act would expose the sidelights to probable damage from the cranes. Furthermore, the stern light may be located on the main mast above the pilothouse, 56′ forward from the aft end of the vessel. Placing the stern light closer to the aft end of the vessel as required by Rule 21 (c) of 72 COLREGS, and Rule 21 (c) of the Inland Rules Act, would result in a stern light location exposed to damage from cargo and crane activity of the main deck working area of the vessel.

This notice is issued under authority of 33 U.S.C. 1605(c), and 33 CFR 81.18.

Dated: March 8, 2010.

By Direction of the Commander.

J. W. Johnson,

Commander, U.S. Coast Guard, Chief, Inspections and Investigations Branch, Eighth Coast Guard District.

[FR Doc. 2010–7814 Filed 4–6–10; 8:45 am]

BILLING CODE 9110–04–P

DEPARTMENT OF HOMELAND SECURITY

Coast Guard

[Docket No. USCG–2010–0141]

Certificate of Alternative Compliance for the Offshore Supply Vessel GULF TIGER

AGENCY: Coast Guard, DHS.

ACTION: Notice.

SUMMARY: The Coast Guard announces that a Certificate of Alternative Compliance was issued for the offshore supply vessel GULF TIGER as required by 33 U.S.C. 1605(c) and 33 CFR 81.18.

DATES: The Certificate of Alternate Compliance was issued on February 12, 2010.

ADDRESSES: The docket for this notice is available for inspection or copying at the Docket Management Facility (M–30), U.S. Department of Transportation, West Building Ground Floor, Room W12–140, 1200 New Jersey Avenue, SE., Washington, DC 20590, between 9 a.m. and 5 p.m., Monday through Friday, except Federal holidays. You may also find this docket on the Internet by going to *http://www.regulations.gov,* inserting USCG–2010–0141 in the "Keyword" box, and then clicking "Search."

FOR FURTHER INFORMATION CONTACT: If you have questions on this notice, call CWO2 David Mauldin, District Eight, Prevention Branch, U.S. Coast Guard, telephone 504–671–2153. If you have questions on viewing or submitting material to the docket, call Renee V. Wright, Program Manager, Docket Operations, telephone 202–366–9826.

SUPPLEMENTARY INFORMATION:

Background and Purpose

A Certificate of Alternative Compliance, as allowed under Title 33 of the Code of Federal Regulations, Parts 81 and 89, has been issued for the h offshore supply vessel GULF TIGER. Full compliance with 72 COLREGS and the Inland Rules Act would hinder the vessel's ability to maneuver within close proximity of offshore platforms. Due to the design of the vessel it would be difficult and impractical to build a supporting structure that would put the side lights within 10% inboard from the greatest breadth of the Vessel, as required by Annex I, paragraph 3(b) of the 72 COLREGS and Annex I, Section 84.05(b), of the Inland Rules Act. Compliance with the rule would cause the side lights on the offshore supply vessel GULF TIGER to be in a location which will be highly susceptible to damage from offshore platforms. The offshore supply vessel GULF TIGER cannot comply fully with lighting requirements as set out in international regulations without interfering with the special function of the vessel (33 U.S.C. 1605(c); 33 CFR 81.18).

Locating the side lights 7¼″ inboard from the greatest breadth of the vessel on the pilot house will provide a shelter location for the lights and allow maneuvering within close proximity to offshore platforms. In addition, the horizontal distance between the forward and aft masthead lights may be 19″–11⅜″. Placing the aft masthead light at the horizontal distance from the forward masthead light as required by Annex I, paragraph 3(a) of the 72 COLREGS, and Annex I, Section 84.05(a) of the Inland Rules Act, would result in an aft masthead light location directly over the aft cargo deck where it would interfere with loading and unloading operations.

The Certificate of Alternative Compliance allows for the placement of the side lights to deviate from requirements set forth in Annex I, paragraph 3(b) of 72 COLREGS, and Annex I, paragraph 84.05(b) of the Inland Rules Act. In addition the Certificate of Alternative Compliance allows for the horizontal separation of the forward and aft masthead lights to deviate from the requirements of Annex I, paragraph 3(a) of 72 COLREGS, and Annex I, Section 84.05(a) of the Inland Rules Act.

This notice is issued under authority of 33 U.S.C. 1605(c), and 33 CFR 81.18.

Dated: February 26, 2010.

J.W. Johnson,

Commander, U.S. Coast Guard, Chief, Inspections and Investigations Branch, By Direction of the Commander, Eighth Coast Guard District.

[FR Doc. 2010–7826 Filed 4–6–10; 8:45 am]

BILLING CODE 9110–04–P

DEPARTMENT OF HOMELAND SECURITY

Coast Guard

[Docket No. USCG–2010–0161]

Certificate of Alternative Compliance for the Offshore Supply Vessel C–ATLAS

AGENCY: Coast Guard, DHS.

ACTION: Notice.

SUMMARY: The Coast Guard announces that a Certificate of Alternative Compliance was issued for the offshore supply vessel C–ATLAS as required by 33 U.S.C. 1605(c) and 33 CFR 81.18.

DATES: The Certificate of Alternate Compliance was issued on March 2, 2010.

ADDRESSES: The docket for this notice is available for inspection or copying at the Docket Management Facility (M–30), U.S. Department of Transportation, West Building Ground Floor, Room W12–140, 1200 New Jersey Avenue, SE., Washington, DC 20590, between 9 a.m. and 5 p.m., Monday through Friday, except Federal holidays. You may also find this docket on the Internet by going to *http://www.regulations.gov,* inserting USCG–2010–0161 in the "Keyword" box, and then clicking "Search."

FOR FURTHER INFORMATION CONTACT: If you have questions on this notice, call CWO2 David Mauldin, District Eight, Prevention Branch, U.S. Coast Guard, telephone 504–671–2153. If you have questions on viewing or submitting material to the docket, call Renee V. Wright, Program Manager, Docket Operations, telephone 202–366–9826.

SUPPLEMENTARY INFORMATION:

Background and Purpose

A Certificate of Alternative Compliance, as allowed under Title 33 of the Code of Federal Regulations, Parts 81 and 89, has been issued for the offshore supply vessel C–ATLAS. Full compliance with 72 COLREGS and the Inland Rules Act would hinder the vessel's ability to operate as designed. The horizontal distance between the forward and aft masthead lights may be 22′2⅜″. Placing the aft masthead light at the horizontal distance from the forward masthead light as required by Annex I, paragraph 3(a) of the 72 COLREGS, and Annex I, Section 84.05(a) of the Inland Rules Act, would result in an aft masthead light location directly over the cargo deck where it would interfere with loading and unloading operations.

The Certificate of Alternative Compliance allows for the horizontal separation of the forward and aft masthead lights to deviate from the requirements of Annex I, paragraph 3(a) of 72 COLREGS, and Annex I, Section 84.05(a) of the Inland Rules Act.

(This notice is issued under authority of 33 U.S.C. 1605(c), and 33 CFR 81.18.)

Dated: March 8, 2010.

J.W. Johnson,

Commander, U.S. Coast Guard, Chief, Inspections and Investigations Branch, By Direction of the Commander, Eighth Coast Guard District.

[FR Doc. 2010–7827 Filed 4–6–10; 8:45 am]

BILLING CODE 9110–04–P

DEPARTMENT OF THE INTERIOR

National Park Service

Availability of the Final General Management Plan and Environmental Impact Statement (GMP/EIS) for Chattahoochee River National Recreation Area (CRNRA), GA

AGENCY: National Park Service, Department of the Interior.

ACTION: Notice.

SUMMARY: Pursuant to 42 U.S.C. 4332(2)(C) of the National Environmental Policy Act of 1969 the National Park Service (NPS) announces the availability of a Final GMP/EIS for the CRNRA, Georgia.

Consistent with NPS laws, regulations, and policies, and the purpose of the CRNRA, the Final GMP/EIS describes Alternative F at the NPS preferred alternative. The preferred alternative incorporates various management prescriptions to ensure protection, access and enjoyment of the park's resources.

The Final GMP/EIS describes the NPS preferred alternative and the potential environmental consequences of implementing the preferred alternative. Impact topics include the cultural, natural, and socioeconomic environments. The Final GMP/EIS contains NPS responses to public comments on the Supplemental Draft GMP/EIS, and copies of agency correspondence and substantive comment letters.

DATES: The NPS will execute a Record of Decision no sooner than 30 days following publication by the Environmental Protection Agency of its Notice of Availability of the Final GMP/EIS in the **Federal Register**.

ADDRESSES: The document will be available for public review and comment online at *http://parkplanning.nps.gov.* A limited number of Compact Disks (CD) and hard copies will be made available at CRNRA headquarters. You may also request a hard copy or CD by contacting the Superintendent, Daniel R. Brown, at CRNRA, 1978 Island Ford Parkway, Sandy Springs, Georgia 30350–3400; telephone 678–538–1200.

SUPPLEMENTARY INFORMATION: The Supplemental Draft GMP/EIS evaluated alternatives to guide the development and future management of the park over the next 20 years. Alternative A (No Action) provides a baseline evaluation of existing resource conditions, visitor use, facilities, and management at the park. Alternative A would continue the current management practices into the future. There would be only minor changes in resources management, visitor programs, or facilities. Alternative B would minimize development in the park and maximize the opportunity for visitors to experience solitude in natural settings that are relatively insulated from the surrounding urban conditions. Motorized boating would not be appropriate in several zones under Alternative B. Alternative C provides for a management system where visitors would be drawn toward a system of hubs in which administrative, commercial, and interpretive facilities are located, providing visitor information, restrooms, parking lot and roads, trail heads and river access. Motorized boating would not be appropriate in several zones under Alternative C. Alternative D would expand and distribute visitor access throughout the park, including newly acquired parcels, and would provide a wide variety of visitor experiences. Connectivity to existing neighborhoods would be optimized and expanded. Alternative E extracts some features from Alternatives C and D, such as providing for more expanded access. Substantial acreage with less hardened forms of access would be maintained, providing more opportunities for relative quiet and solitude, and motorized boating and fishing would be appropriate throughout the park. The preferred alternative, Alternative F, is similar to Alternative E providing for more expanded access, and allowing for motorized boating and fishing throughout the park, while also maintaining opportunities for relative quiet and solitude. The potential environmental consequences are addressed for each alternative, including impacts to natural resources, cultural resources, transportation, and visitor and community values.

The Supplemental Draft GMP/EIS was available for public and agency review from September 26, 2008, through December 1, 2008. Copies of the document were sent to individuals, agencies, organizations, and local libraries. The document was also made available for public review at the park and on the NPS Planning, Environment, and Public Comment Web site (*http://parkplanning.nps.gov*) in September 2008. Public meetings were held on October 27, 2008, and October 30, 2008. During the review period, the NPS accepted written and oral comments on the document. The NPS carefully reviewed all comments and prepared a report on responses to all substantive comments (Chapter 6). The Final GMP dated March 2009 sets forth a vision for the development and operation of CRNRA.

Authority: The authority for publishing this notice is 40 CFR 1506.6.

FOR FURTHER INFORMATION CONTACT: Contact Superintendent, Daniel R. Brown at CRNRA, 1978 Island Ford Parkway, Sandy Springs, Georgia 30350–3400; telephone 678–538–1200.

The responsible official for this Final EIS is the Regional Director, Southeast Region, National Park Service, 100 Alabama Street SW., 1924 Building, Atlanta, Georgia 30303.

Dated: March 25, 2010.

Gordon Wissinger,

Acting Regional Director, Southeast Region.

[FR Doc. 2010–7786 Filed 4–6–10; 8:45 am]

BILLING CODE 4310–70–P

DEPARTMENT OF THE INTERIOR

Office of the Secretary

Blackstone River Valley National Heritage Corridor Commission: Notice of Meeting

Notice is hereby given in accordance with Section 552b of Title 5, United States Code, that a meeting of the John H. Chafee Blackstone River Valley National Heritage Corridor Commission will be held on Thursday, May 20, 2010.

The Commission was established pursuant to Public Law 99–647. The purpose of the Commission is to assist federal, state and local authorities in the development and implementation of an integrated resource management plan for those lands and waters within the Corridor.

The meeting will convene on May 20, 2010 at 9 a.m. at Atria Draper Place located at 25 Hopedale Street, Hopedale, MA for the following reasons:

1. Approval of Minutes
2. Chairman's Report
3. Executive Director's Report
4. Financial Budget
5. Public Input

It is anticipated that about thirty people will be able to attend the session in addition to the Commission members.

Interested persons may make oral or written presentations to the Commission or file written statements. Such requests should be made prior to the meeting to: Jan H. Reitsma, Executive Director, John H. Chafee, Blackstone River Valley National Heritage Corridor Commission, One Depot Square, Woonsocket, RI 02895, Tel.: (401) 762–0250.

Further information concerning this meeting may be obtained from Jan H. Reitsma, Executive Director of the

Commission at the aforementioned address.

Jan H. Reitsma,
Executive Director, BRVNHCC.

Notice of Full Commission Meeting for the John H. Chafee Blackstone River Valley National Heritage Corridor Commission

Notice is hereby given, in accordance with section 552b of Title 5, United States Code, that the meeting of the Full Commission of the John H. Chafee Blackstone River Valley National Heritage Corridor Commission will be held on Thursday, May 20, 2010 at 9 a.m. at Atria Draper Place located at 25 Hopedale Street, Hopedale, MA. The purpose of the Commission is to assist federal, state and local authorities in the development and implementation of an integrated Resource Management Plan for those lands and waters within the Corridor in Rhode Island and Massachusetts.

[FR Doc. 2010–7881 Filed 4–6–10; 8:45 am]

BILLING CODE 4310–RK–P

DEPARTMENT OF THE INTERIOR

Fish and Wildlife Service

[FWS-R9-MB-2010-N069] [91200-1232-0000-P2]

Proposed Information Collection; OMB Control Number 1018-0022; Federal Fish and Wildlife License/Permit Applications and Reports, Migratory Birds

AGENCY: Fish and Wildlife Service, Interior.

ACTION: Notice; request for comments.

SUMMARY: We (Fish and Wildlife Service) will ask the Office of Management and Budget (OMB) to approve the information collection (IC) described below. As required by the Paperwork Reduction Act of 1995 and as part of our continuing efforts to reduce paperwork and respondent burden, we invite the general public and other Federal agencies to take this opportunity to comment on this IC. This IC is scheduled to expire on November 30, 2010. We may not conduct or sponsor and a person is not required to respond to a collection of information unless it displays a currently valid OMB control number.

DATES: To ensure that we are able to consider your comments on this IC, we must receive them by June 7, 2010.

ADDRESSES: Send your comments on the IC to Hope Grey, Information Collection Clearance Officer, Fish and Wildlife Service, MS 222–ARLSQ, 4401 North Fairfax Drive, Arlington, VA 22203 (mail); or *hope_grey@fws.gov* (e-mail).

FOR FURTHER INFORMATION CONTACT: To request additional information about this IC, contact Hope Grey by mail or e-mail (see ADDRESSES) or by telephone at (703) 358–2482.

SUPPLEMENTARY INFORMATION:

I. Abstract

Our Regional Migratory Bird Permit Offices use information that we collect on permit applications to determine the eligibility of applicants for permits requested in accordance with the criteria in various Federal wildlife conservation laws and international treaties, including:

(1) Migratory Bird Treaty Act (16 U.S.C. 703 et seq.).

(2) Lacey Act (16 U.S.C. 3371 et seq.).

(3) Bald and Golden Eagle Protection Act (16 U.S.C. 668).

Service regulations implementing these statutes and treaties are in Chapter I, Subchapter B of Title 50 Code of Federal Regulations (CFR). These regulations stipulate general and specific requirements that, when met, allow us to issue permits to authorize activities that are otherwise prohibited. This revised IC includes migratory bird permit applications and the reports associated with the permits.

This IC includes four permit application and report forms that are currently approved under OMB Control Number 1018-0136. Once OMB takes action on this IC, we will discontinue OMB Control No. 1018-0136.

- 3-200-71—Eagle Take (Disturb).
- 3-200-72—Eagle Nest Take.
- 3-202-15—Eagle Take Monitoring and Annual Report.
- 3-202-16—Eagle Nest Take Monitoring and Reporting.

In addition, we plan to add three new forms:.

- FWS Form 3-200-81 (Special Purpose–Utility) will provide an application specifically tailored for utilities (e.g., power, communications) to request permits to salvage migratory birds on their property and rights-of-way.
- FWS Form 3-200-82 (Eagle Transport Into and Out of the United States) will provide an application for permits under the Bald and Golden Eagle Protection Act to transport dead eagle specimens into and out of the country temporarily for scientific or exhibition purposes, such as for museum exhibits.
- FWS Form 3-202-17 (Special Purpose–Utility Annual Report) will provide a standardized annual report form for Special Purpose–Utility permits.

II. Data

OMB Control Number: 1018-0022.

Title: Federal Fish and Wildlife Permit Applications and Reports—Migratory Birds and Eagles, 50 CFR 10, 13, 21, and 22.

Service Form Number(s): 3-200-6 through 3-200-18, 3-200-67, 3-200-68, 3-200-71, 3-200-72, 3-200-77, 3-200-78, 3-200-79, 3-200-81, 3-200-82, 3-202-1 through 3-202-17, 3-186, and 3-186A.

Type of Request: Revision of a currently approved information collection.

Affected Public: Individuals; zoological parks; museums; universities; scientists; taxidermists; businesses; and Federal, State, tribal, and local governments.

Respondent's Obligation: Required to obtain or retain a benefit.

Frequency of Collection: On occasion for applications; annually or on occasion for reports.

Estimated Nonhour Cost Burden: $1,043,600 for fees associated with permit applications.

Activity	Number of annual respondents	Number of annual responses	Completion time per response	Annual burden hours*
3-200-6 – Import/Export	75	75	1 hour	75
3-200-7 – Scientific Collecting	200	200	5 hours	1,000
3-200-8 – Taxidermy	700	700	2 hours	1,400
3-200-9 – Waterfowl Sale and Disposal	300	300	1.5 hours	450
3-200-10a – Special Purpose Salvage	300	300	1.5 hours	450
3-200-10b – Rehabilitation	200	200	12 hours	2,400
3-200-10c – Special Purpose Education Possession/Live	250	250	4.5 hours	1,125
3-200-10d – Special Purpose Education Possession/Dead	100	100	2.5 hours	250
3-200-10e – Special Purpose Game Bird Propagation	20	20	1.5 hours	30
3-200-10f – Special Purpose Miscellaneous	50	50	2.5 hours	125

Activity	Number of annual respondents	Number of annual responses	Completion time per response	Annual burden hours*
3-200-11 – Falconry	700	700	1.25 hours	875
3-200-12 – Raptor Propagation	50	50	4 hours	200
3-200-13 – Depredation	2,720	2,720	2.9 hours**	7,888
3-200-14 – Bald and Golden Eagle Exhibition	135	135	5.5 hours	743
3-200-15a – Eagle Parts for Native American Religious Purposes – Permit Application First Order and Tribal Enrollment Certification.	1,830	1,830	1 hour	1,830
3-200-15b – Eagle Parts for Native American Religious Purposes – Reorder Request.	900	900	20 minutes	300
3-200-16 – Take of Depredating Eagles	30	30	3.5 hours	105
3-200-17 – Eagle Falconry	10	10	3.25 hours	33
3-200-18 – Take of Golden Eagle Nests	2	2	6.5 hours	13
3-200-67 – Special Canada Goose	5	5	7 hours	35
3-200-68 – Renewal of a Permit	4,500	4,500	1.5 hours	6,750
3-200-71 – Eagle Take	500	500	16 hours	8,000
3-200-72 – Eagle Nest Take	100	100	16 hours	1,600
3-200-71 and 72 – Permit Amendments	40	40	6 hours	240
3-200-71 and 72 – Programmatic Permit	26	26	40 hours	1,040
3-200-71 and 72 – Programmatic Permit Amendments	10	10	20 hours	200
3-200-77 – Native American Eagle Take	10	10	2.25 hours	22
3-200-78 – Native American Eagle Aviary	5	5	5 hours	25
3-200-79 – Special Purpose – Abatement Activities Using Raptors*.	25	25	2.5 hours	63
3-200-81—Special Purpose—Utility	30	30	2 hours	60
3-200-82—Eagle Transport Into and Out of United States	10	10	1 hour	10
3-202-1 – Scientific Collecting Annual Report	600	600	1 hour	600
3-202-2 – Waterfowl Sale and Disposal Annual Report	1,050	1,050	30 minutes	526
3-202-3 – Special Purpose Salvage Annual Report	1,850	1,850	1 hour	1,850
3-202-4 – Rehabilitation Annual Report	1,650	1,650	3 hours	4,950
3-202-5 – Possession for Education Annual Report	1,225	1,225	1.5 hours	1,838
3-202-6 – Special Purpose Game Bird Annual Report	95	95	30 minutes	48
3-202-7 – Special Purpose Miscellaneous Annual Report	125	125	30 minutes	63
3-202-8 – Raptor Propagation Annual Report	440	440	1 hour	440
3-202-9 – Depredation Annual Report	2,550	2,550	1 hour	2,550
3-200-10 – Special State Canada Goose Annual Report	20	20	1 hour	20
3-202-11 – Eagle Depredation Annual Report	60	60	1 hour	60
3-202-12 – Special Purpose Possession (Education) Annual Report.	1,225	1,225	1.5 hours	1,838
3-202-13 – Eagle Exhibition Annual Report	700	700	1 hour	700
3-202-14 – Native American Eagle Aviary Annual Report	10	10	30 minutes	5
3-202-15—Eagle Take Monitoring and Annual Report	1,120	1,120	30 hours	33,600
3-202-16—Eagle Nest Take Monitoring and Reporting	40	40	16 hours	640
3-202-17—Special Purpose-Utility Annual Report	100	100	1 hour	100
3-186 – Notice of Transfer or Sale of Migratory Waterfowl	1,050	12,900	15 minutes	3,159
3-186A – Migratory Bird Acquisition and Disposition Report	4,660	18,640	15 minutes	4,659
Totals	32,403	58,233		94,983

* Rounded

** Completion time varies from 1.5 hours for individuals to 3 hours for businesses. Average completion time is 2.9 hours.

III. Request for Comments

We invite comments concerning this IC on:

- Whether or not the collection of information is necessary, including whether or not the information will have practical utility;
- The accuracy of our estimate of the burden for this collection of information;
- Ways to enhance the quality, utility, and clarity of the information to be collected; and
- Ways to minimize the burden of the collection of information on respondents.

Comments that you submit in response to this notice are a matter of public record. We will include or summarize each comment in our request to OMB to approve this IC. Before including your address, phone number, e-mail address, or other personal identifying information in your comment, you should be aware that your entire comment, including your personal identifying information, may be made publicly available at any time. While you can ask us in your comment to withhold your personal identifying information from public review, we cannot guarantee that we will be able to do so.

Dated: March 30, 2010

Hope Grey,

Information Collection Clearance Officer, Fish and Wildlife Service.

FR Doc. 2010–7807 Filed 4–6–10; 8:45 am

BILLING CODE 4310–55–S

DEPARTMENT OF THE INTERIOR

Fish and Wildlife Service

[FWS–R3–ES–2010–N058; 30120–1113–0000 D2]

Approved Recovery Plan for the Scaleshell Mussel

AGENCY: Fish and Wildlife Service, Interior.

ACTION: Notice of document availability.

SUMMARY: We, the U.S. Fish and Wildlife Service (Service), announce the availability of the approved recovery plan for the scaleshell mussel (*Leptodea leptodon*). The endangered scaleshell mussel is now consistently found in only the Meramec, Bourbeuse, and Gasconade Rivers in Missouri. This plan includes specific recovery objectives and criteria to achieve removal of the species from the protections of the Endangered Species Act (Act).

ADDRESSES: You may obtain a copy of the recovery plan by sending a request to Field Supervisor, U.S. Fish and Wildlife Service, Ecological Services Field Office, 101 Park DeVille Drive, Suite A, Columbia, MO 65203 (printed copies will be available for distribution within 4 to 6 weeks), or by downloading it from the Internet at: *http://www.fws.gov/endangered/recovery/index.html#plans.*

FOR FURTHER INFORMATION CONTACT: Mr. Andy Roberts, by telephone at (573) 234–2132 ext. 110. TTY users may contact Mr. Roberts through the Federal Relay Service at (800) 877–8339.

SUPPLEMENTARY INFORMATION:

Background

Recovery of endangered or threatened animals and plants to the point where they are again secure, self-sustaining members of their ecosystems is a primary goal of the Service's endangered species program. To help guide the recovery effort, we are working to prepare recovery plans for most listed species native to the United States. Recovery plans describe actions considered necessary for the conservation of the species, establish criteria for reclassification or delisting listed species, and estimate time and cost for implementing the measures needed.

The Act (16 U.S.C. 1531 *et seq.*) requires us to develop recovery plans for listed species unless such a plan will not promote the conservation of a particular species. Section 4(f) of the Act, as amended in 1988, requires us to provide the public notice, and an opportunity for public review and comment, during recovery plan development. We provided the draft scaleshell recovery plan to the public and solicited comments from August 6, 2004, through September 7, 2004 (69 FR 47949). We considered information we received during the public comment period, and information from peer reviewers, in our preparation of the recovery plan, and also summarized that information in Appendix V of this approved recovery plan.

We listed the scaleshell as endangered on October 9, 2001 (66 FR 51322). The current distribution of the scaleshell is limited to only three rivers in Missouri: the Meramec, Bourbeuse, and Gasconade. Surveys indicate that the species is in decline throughout these areas. In the last 25 years, it has been reported from 15 additional streams in Arkansas, Oklahoma, and South Dakota, but only has been represented by a small number or a single specimen (live or dead) collected during one or more extensive mussel surveys of these rivers.

The scaleshell occurs in medium-to-large rivers with low-to-medium gradients. It primarily inhabits stable riffles and runs with gravel or mud substrate and moderate current velocity. The scaleshell requires good water quality, and is usually found where a diversity of other mussel species are concentrated. More specific habitat requirements of the scaleshell are unknown, particularly of the juvenile stage. Water quality degradation, sedimentation, channel destabilization, and habitat destruction are contributing to the decline of the scaleshell throughout its range. The spread of the nonnative zebra mussel (*Dreissena polymorpha*) may threaten scaleshell populations in the near future.

The scaleshell must complete a parasitic phase on freshwater drum (*Aplodinotus grunniens*) to complete its life cycle. The scaleshell's complex life cycle and extreme rarity hinders its ability to reproduce. The sedentary nature of the species and the low density of remaining populations exacerbate threats to its survival posed by the natural and manmade factors. Further, the relatively short life span of the scaleshell may render it less able to tolerate periods of poor recruitment. The remaining populations are very susceptible to local extirpation, with little chance of recolonization because of their scattered and isolated distribution.

The principal recovery strategy is to conserve existing habitat and restore degraded habitat by addressing threats immediately adjacent to occupied sites and in upstream areas of occupied watersheds. Stream reaches occupied by the scaleshell have numerous and widespread threats affecting the species. In some cases, these threats are related to the surrounding land use and can originate upstream of extant populations. Therefore, some recovery actions may need to be implemented on a large scale in order to restore aquatic habitat downstream. Other recovery actions include artificial propagation to increase and stabilize populations, and research on the biology, ecology, and genetics of the species.

Recovery efforts on this scale will not be possible without soliciting outside help to restore aquatic habitat and improve surface lands. The assistance of Federal and State agencies, conservation groups, local governments, private landowners, industries, businesses, and farming communities will be essential in implementing the necessary recovery actions for the scaleshell to meet recovery goals. The role of private landowners, nonprofit organizations, and corporations cannot be overemphasized, as most land in watersheds occupied by the scaleshell is under private ownership.

The scaleshell mussel will be considered for delisting when section 4(a)(1) threat factors under the Act are assessed and when the following criteria are met:

(1) Through protection of existing populations, successful establishment of reintroduced populations, or the discovery of additional populations, a total of eight stream populations exist, each in a separate watershed and each made up of at least four local and geographically distinct populations with, at a minimum, one stream population located in the Upper Mississippi River Basin, four in the Middle Mississippi River Basin (two of these must exist east of the Mississippi River), and three in the Lower Mississippi River Basin;

(2) Each local population in Criterion 1 is viable in terms of population size, age structure, recruitment, and persistence; and

(3) Threats to local populations in Criterion 1 have been identified and addressed per measurable criteria developed in the Recovery Plan.

We will achieve these criteria through the following actions:

(1) Stabilizing existing populations through artificial propagation to prevent extirpation;

(2) Formation of partnerships and utilization of existing programs to protect remaining populations, restore habitat, and improve surface lands;

(3) Improving understanding of the biology and ecology of the scaleshell;

(4) Further delineating the current status and distribution of the scaleshell;

(5) Restoring degraded habitat in areas of historical range;

(6) Reintroducing the scaleshell into portions of its former range;

(7) Initiating various educational and public outreach actions to heighten awareness of the scaleshell as an endangered species and to solicit help with recovery actions; and

(8) Tracking recovery and conducting periodic evaluations with respect to recovery criteria.

Criteria are also provided in the recovery plan to reclassify the scaleshell mussel to threatened status. The species will be considered for reclassification when section 4(a)(1) threat factors under the Act are assessed and when either of the following criteria is met:

(1) Through protection of existing populations, successful establishment of reintroduced populations, or the discovery of additional populations, four stream populations exist, each in a separate watershed and each made up of at least four local populations located in distinct portions of the stream;

(2) Each local population in Criterion 1 is viable in terms of population size, age structure, recruitment, and persistence; and

(3) Threats to local populations in Criterion 1 have been identified and addressed per the measurable criteria developed in the Recovery Plan.

Authority: Sec. 4(f) of the Endangered Species Act, 16 U.S.C. 1533(f).

Dated: March 18, 2010.

Lynn M. Lewis,

Assistant Regional Director, Ecological Services, Midwest Region.

[FR Doc. 2010–7849 Filed 4–6–10; 8:45 am]

BILLING CODE 4310–55–P

DEPARTMENT OF THE INTERIOR

Fish and Wildlife Service

[FWS–R7–ES–2010–N055; 70120–1113–0000–C4]

Endangered and Threatened Wildlife and Plants; Spectacled Eider (Somateria fischeri): Initiation of 5-Year Status Review

AGENCY: Fish and Wildlife Service, Interior.

ACTION: Notice of initiation of 5-year status review and request for information.

SUMMARY: We, the U.S. Fish and Wildlife Service (Service), announce the initiation of a 5-year status review for the spectacled eider (*Somateria fischeri*), a bird species listed as threatened under the Endangered Species Act of 1973, as amended (Act). We conduct 5-year reviews to ensure that our classification of each species as threatened or endangered on the List of Endangered and Threatened Wildlife and Plants is accurate. We request any new information on this species that may have a bearing on its classification as threatened. Based on the results of this 5-year review, we will make a finding on whether this species is properly classified under the Act.

DATES: To allow us adequate time to conduct our 5-year review, we are requesting that you submit your information no later than June 7, 2010. However, we accept new information about any listed species at any time.

ADDRESSES: For instructions on how to submit information for our 5-year review, see "Request for New Information."

FOR FURTHER INFORMATION CONTACT: Karen Laing, Endangered Species Biologist, at the address under "Contacts"or by phone at (907) 786–3459.

SUPPLEMENTARY INFORMATION:

I. Background

We originally listed the spectacled eider (*Somateria fischeri*) as threatened under the Act on May 10, 1993 (58 FR 27474). For the description, taxonomy, distribution, status, breeding biology and habitat, and a summary of factors affecting the species, please see the final listing rule. A recovery plan was completed on August 12, 1996. On February 6, 2001 (66 FR 9146), we designated critical habitat for the species.

Three breeding populations have been identified: In Arctic Russia (AR) on the Siberian coast, and in Alaska on the coastal zone of the Yukon-Kuskokwim Delta (YKD) and on the Arctic Coastal Plain (ACP). Molting occurs at sea in nearshore waters. The wintering area is in polynyas (openings in sea ice) in the central Bering Sea south of St. Lawrence Island.

The spectacled eider breeding population on the YKD declined by 94–98 percent between the early 1970s and the 1993 listing date, from 47,700–70,000 nesting pairs to 1,700–3,000 pairs. There were thought to be 3,000 pairs on the ACP in the 1970s. Although there was no standard survey of the ACP population in the early 1990s, there was evidence of an 80 percent decline in breeding birds at Prudhoe Bay between 1981 and 1991. The size of the AR breeding population was unknown at listing. The causes of these declines were unknown; potential contributory factors include harvest, ingestion of spent lead shot, and predation. Recovery actions in the recovery plan focus on ameliorating these threats, and on monitoring populations.

Since 1993, the YKD population has varied, but apparently increased in the last decade, with 4,991 (Standard Error 641) nesting pairs estimated in 2008. The ACP population survey provides an index of individual birds on breeding grounds rather than nests. The estimate in 2008 was 6,207 (Standard Error 592) birds; no trend is evident since the survey began in 1993. Aerial surveys in Arctic Russia during the period 1993–1995 provided an index of 146,245 birds.

II. Initiation of 5-Year Status Review

A. Why Do We Conduct a 5-Year Review?

Under the Act (16 U.S.C. 1531 *et seq.*), we maintain a List of Endangered and Threatened Wildlife and Plants (List) in the Code of Federal Regulations (CFR) at 50 CFR 17.11 (for animals) and 17.12 (for plants). An informational copy of the List, which covers all listed species, is also available on our Internet site at *http://endangered.fws.gov/wildlife.html#Species.* Section 4(c)(2)(A) of the Act requires us to review the status of each listed species at least once every 5 years. Then, based on such review, under section 4(c)(2)(B), we determine whether any species should be removed from the List (delisted), reclassified from endangered to threatened, or reclassified from threatened to endangered. Any change in Federal classification requires a separate rulemaking process.

Our regulations in 50 CFR 424.21 require that we publish a notice in the **Federal Register** announcing the species we are reviewing. This notice announces our active 5-year status review of the threatened spectacled eider.

B. What Information Do We Consider in Our Review?

We consider the best scientific and commercial data available at the time we conduct our review. This includes new information that has become available since our current listing determination or most recent status review of the species, such as new information regarding:

A. Species biology, including but not limited to population trends, distribution, abundance, demographics, and genetics;

B. Habitat conditions, including but not limited to amount, distribution, and suitability;

C. Conservation measures that have been implemented that benefit the species;

D. Threat status and trends (see five factors under heading "How Do We Determine Whether a Species is Endangered or Threatened?"); and

E. Other new information, data, or corrections, including but not limited to taxonomic or nomenclatural changes,

identification of erroneous information contained in the List, and improved analytical methods.

C. How Do We Determine Whether a Species is Endangered or Threatened?

Section 4(a)(1) of the Act requires that we determine whether a species is endangered or threatened based on one or more of the five following factors:

A. The present or threatened destruction, modification, or curtailment of its habitat or range;

B. Overutilization for commercial, recreational, scientific, or educational purposes;

C. Disease or predation;

D. The inadequacy of existing regulatory mechanisms; or

E. Other natural or manmade factors affecting its continued existence.

Under section 4(b)(1) of the Act, we are required to base our assessment of these factors solely on the best scientific and commercial data available.

D. What Could Happen as a Result of Our Review?

For each species we review, if we find new information indicating a change in classification may be warranted, we may propose a new rule that could do one of the following:

A. Reclassify the species from threatened to endangered (uplist);

B. Reclassify the species from endangered to threatened (downlist); or

C. Remove the species from the List (delist).

If we determine that a change in classification is not warranted, then the species remains on the List under its current status.

We must support any delisting by the best scientific and commercial data available, and only consider delisting if such data substantiate that the species is neither endangered nor threatened for one or more of the following reasons:

A. The species is considered extinct;

B. The species is considered to be recovered; and/or

C. The original data available when the species was listed, or the interpretation of such data, were in error (50 CFR 424.11(d)).

E. Request for New Information

To ensure that a 5-year review is complete and based on the best available scientific and commercial information, we request new information from the public, governmental agencies, Tribes, the scientific community, environmental entities, industry, and any other interested parties concerning the status of the species.

See "What Information Do We Consider in Our Review?" for specific criteria. If you submit information, support it with documentation such as maps, bibliographic references, methods used to gather and analyze the data, and/or copies of any pertinent publications, reports, or letters by knowledgeable sources.

Submit your comments and materials to office listed under "Contacts."

F. Public Availability of Comments

Before including your address, phone number, e-mail address, or other personal identifying information in your comment, you should be aware that your entire comment—including your personal identifying information—may be made publicly available at any time. While you can ask us in your comment to withhold your personal identifying information from public review, we cannot guarantee that we will be able to do so. Comments and materials received will be available for public inspection, by appointment, during normal business hours at the offices where we receive comments.

III. Contacts

Submit your comments and information on this species, as well as any request for information, by any one of the following methods. You may also view information and comments we receive in response to this notice, as well as other documentation in our files, at the following locations by appointment, during normal business hours.

E-mail: Karen_laing@fws.gov; Use "spectacled eider" as the message subject line.

Fax: Attn: Karen Laing, (907) 786–3848.

U.S. mail: Karen Laing, U.S. Fish and Wildlife Service, MS–361, 1011 E. Tudor Road, Anchorage, AK 99503.

In-Person drop-off or Document review/pickup: You may drop off comments and information, review/obtain documents, or view received comments during regular business hours at the above address.

IV. Definitions

(A) *Species* includes any species or subspecies of fish, wildlife, or plant, and any distinct population segment of any species of vertebrate, which interbreeds when mature; (B) *Endangered* means any species that is in danger of extinction throughout all or a significant portion of its range; and

(C) *Threatened* means any species that is likely to become an endangered species within the foreseeable future throughout all or a significant portion of its range.

V. Authority

We publish this notice under the authority of the Endangered Species Act of 1973, as amended (16 U.S.C. 1531 *et seq.*).

Dated: March 30, 2010.

Gary Edwards,

Acting Regional Director, Region 7, U.S. Fish and Wildlife Service.

[FR Doc. 2010–7794 Filed 4–6–10; 8:45 am]

BILLING CODE 4310–55–P

DEPARTMENT OF THE INTERIOR

National Park Service

Termination of an Environmental Impact Statement (EIS) for the General Management Plan (GMP) for Kings Mountain National Military Park (Park), South Carolina

AGENCY: National Park Service, Department of Interior.

ACTION: Notice.

SUMMARY: The National Park Service (NPS) is terminating preparation of an EIS for the GMP for the Park, South Carolina. A Notice of Intent to prepare an EIS for the Park GMP was published in the **Federal Register** on October 10, 2006 (71 FR 63350), and followed by a scoping newsletter. The NPS has since determined that an Environmental Assessment rather than an EIS is the appropriate level of environmental documentation for the plan.

SUPPLEMENTARY INFORMATION: The GMP will establish the overall management direction for the next 15 to 20 years. Two scoping information meetings were conducted on May 6 & 7, 2008, with stakeholders and the general public at Kings Mountain, North Carolina, and York, South Carolina. Initial scoping did not result in significant impacts being identified by the public. Additionally, the preliminary analysis of the alternatives does not indicate that significant impacts will result from implementation of any of the alternatives. The NPS planning team has developed two action alternatives, in addition to the no-action alternative (Alternative A) which represents the continuation of current management policies and practices. Alternative B would expand interpretive programs and materials to include the continuum of human history at the site, while continuing to focus the park's primary efforts on the 1780 battle. In addition, more interpretation of the natural history and environment of the site would be included in the park's interpretive program. Alternative C would broaden the interpretive

experience at the park beyond the immediate battleground ridge area to include the routes and approaches used by Overmountain Victory fighters and more exhibits and programs in the woods around the ridge.

DATES: The NPS will notify the public, by mail, Web site, and other means, of public review periods and meetings associated with the Draft GMP/EA. All public review and other written public information will be made available online at *http://parkplanning.nps.gov/parkHome.cfm?parkId=390*.

Authority: The authority for publishing this notice is 40 CFR 1506.6.

FOR FURTHER INFORMATION CONTACT: Erin Broadbent, Superintendent, Kings Mountain National Military Park, 2625 Park Rd., Blacksburg, SC 2970; telephone, (864) 936–7921, e-mail: *kimo_superintendent@nps.gov.*

The responsible official for this Final EIS is the Regional Director, Southeast Region, National Park Service, 100 Alabama Street, SW., 1924 Building Atlanta, Georgia 30303.

Dated: March 18, 2010.

David Vela,

Regional Director, Southeast Region, National Park Service.

[FR Doc. 2010–7806 Filed 4–6–10; 8:45 am]

BILLING CODE 4310–70–P

DEPARTMENT OF THE INTERIOR

Bureau of Land Management

[CACA 49016, LLCAD05000, L51010000.FX0000. LVRWB092990]

Notice of Availability of the Draft Environmental Impact Statement/Staff Assessment for the Solar Millennium's Ridgecrest Solar Power Project and Possible California Desert Conservation Area Plan Amendment

AGENCY: Bureau of Land Management, Interior.

ACTION: Notice of Availability.

SUMMARY: In accordance with the National Environmental Policy Act of 1969, as amended (NEPA), and the Federal Land Policy and Management Act of 1976, as amended (FLPMA), the Bureau of Land Management (BLM) and the California Energy Commission (CEC) have prepared a Draft Environmental Impact Statement (EIS), Draft California Desert Conservation Area (CDCA) Plan Amendment, and Staff Assessment (SA) as a joint environmental analysis document for the Ridgecrest Solar Power Project (RSPP), Kern County, California, and by this notice are announcing the opening of the comment period.

DATES: To ensure that comments will be considered, the BLM must receive written comments on the Draft EIS/SA within 90 days following the date the Environmental Protection Agency publishes its Notice of Availability of this document in the **Federal Register**. The BLM will announce future meetings or hearings and any other public involvement activities at least 15 days in advance through public notices, media releases, and/or mailings.

ADDRESSES: You may submit comments related to the RSPP by any of the following methods:

- *Web site: http://www.energy.ca.gov/sitingcases/solar_millennium_ridgecrest/index.html.*
- *E-mail: esolorio@energy.state.ca.us* and *carspp@ca.blm.gov.*
- *Fax:* (916) 651–0966
- *Mail:* Eric Solorio, Project Manager, Siting, Transmission, and Environmental Protection Division, California Energy Commission, 1516 Ninth Street, MS–15, Sacramento, California 95814.

Copies of the Solar Millennium's RSPP Draft EIS/SA are available from the CEC and the BLM at the above addresses and in the BLM Ridgecrest Field Office, 300 South Richmond Road, Ridgecrest, California 92555, or the California Desert District Office, 22835 Calle San Juan de los Lagos, Moreno Valley, California 92553.

FOR FURTHER INFORMATION CONTACT: Janet Eubanks, BLM Project Manager, telephone: (951) 697–5376, address: Bureau of Land Management, 22835 Calle San Juan de los Lagos, Moreno Valley, California 92553; or e-mail *carspp@ca.blm.gov.*

SUPPLEMENTARY INFORMATION: Solar Millennium has submitted to the BLM an amended application to develop a dry-cooled, utility-scale solar thermal electric power generating facility. The project will have a nominal output of 250 megawatts, consisting of a single power plant utilizing two solar fields.

The project would be located in northeastern Kern County, California, about five miles southwest of Ridgecrest, California. The proposed project right-of-way (ROW) would encompass approximately 3,995 acres of public lands administered by the BLM. The total disturbance area would encompass approximately 1,944 acres. The dry-cooled project would use solar parabolic trough technology to generate electricity. The project also includes the relocation of two Southern California Edison electrical transmission lines, construction of a new 5-mile long water supply pipeline, and an access road.

The BLM's purpose and need for the RSPP is to respond to Solar Millennium's application under Title V of FLPMA (43 U.S.C. 1761) for a ROW grant to construct, operate, and decommission a solar thermal facility on public lands in compliance with FLPMA, the BLM ROW regulations, and other applicable Federal laws and regulations. The BLM will decide whether to approve, approve with modification, or deny issuance of a ROW grant to Solar Millennium for the proposed RSPP. The BLM will also amend the CDCA Plan in this NEPA analysis by designating the project area as either available or unavailable to solar energy projects. The CDCA Plan (1980, as amended), while recognizing the potential placement of solar generation facilities on public lands, requires that all sites proposed for power generation or transmission not identified in the plan be considered through the plan amendment process.

In response to the application received from Solar Millennium, the BLM's proposed action is to authorize the RSPP and amend the CDCA Plan to designate the project area as available for solar energy projects. The project area would avoid El Paso Wash. In addition to the proposed action, the BLM is analyzing the following action alternatives: An alternative that limits the project to the Northern Unit to avoid Mohave Ground Squirrel designated critical habitat; an alternative that limits the project to the Southern Unit to avoid high population densities of desert tortoise and other resources; and the original proposed project alternative. All action alternatives would amend the CDCA Plan to make the area available to solar energy development.

In addition to the above, as required under NEPA, the Draft EIS analyzes a no action alternative that would not require a CDCA Plan amendment. The Draft EIS also analyzes two additional no action alternatives that reject the project, but amend the CDCA Plan to either: (1) Designate the project area as available to future solar energy power generation projects; or (2) designate the project area as unavailable to future solar energy power generation projects. The BLM will take into consideration the provisions of the Energy Policy Act of 2005 and Secretarial Orders 3283 *Enhancing Renewable Energy Development on the Public Lands* and 3285 *Renewable Energy Development by the Department of the Interior* in responding to the Solar Millennium application.

The BLM will use the NEPA commenting process to satisfy the public involvement process of Section 106 of the National Historic Preservation Act (16 U.S.C. 470f) as provided for in 36 CFR 800.2(d)(3). Native American Tribal consultations are being conducted in accordance with policy, and Tribal concerns will be given due consideration, including impacts on Indian trust assets.

The BLM has entered into a Memorandum of Understanding (MOU) with the CEC to conduct a joint environmental review of solar thermal projects that are proposed on Federal land managed by the BLM. The BLM and CEC have agreed through the MOU to conduct a joint environmental review of the project in a single combined NEPA/California Environmental Quality Act process and document. The BLM and CEC have prepared the Draft EIS/SA evaluating the potential impacts of the proposed RSPP on air quality, biological resources, cultural resources, water resources, geological resources and hazards, land use, noise, paleontological resources, public health, socioeconomic impacts, soils, traffic and transportation, visual resources, and other resources.

A Notice of Intent to Prepare an EIS/SA and Proposed Land Use Plan Amendment for the Proposed Ridgecrest Solar Power Project in Kern County, California was published in the **Federal Register** on November 23, 2009 (74 FR 61168). The BLM held two public scoping meetings in Ridgecrest and Inyokern, California, on January 5 and 6, 2010. The formal scoping period ended January 21, 2010.

Before including your address, phone number, e-mail address, or other personal identifying information in your comment, you should be aware that your entire comment—including your personal identifying information—may be made publicly available at any time. While you can ask us in your comment to withhold your personal identifying information from public review, we cannot guarantee that we will be able to do so.

Thomas Pogacnik,

Deputy State Director.

Authority: 40 CFR 1506.6, 1506.10 and 43 CFR 1610.2.

[FR Doc. 2010–7832 Filed 4–6–10; 8:45 am]

BILLING CODE 4310–40–P

DEPARTMENT OF THE INTERIOR

National Park Service

National Park Service Benefits-Sharing Final Environmental Impact Statement Record of Decision

AGENCY: National Park Service, Department of the Interior.

ACTION: Notice of Availability of the Record of Decision for the Servicewide Benefits-Sharing Final Environmental Impact Statement.

SUMMARY: Pursuant to the National Environmental Policy Act of 1969, 42 U.S.C. 4332(2)(C), the National Park Service announces the availability of the Record of Decision for the Benefits-Sharing Final Environmental Impact Statement (FEIS) covering all units of the National Park System. On March 5, 2010, the Deputy Director of the National Park Service approved the Record of Decision for the project. As soon as practicable, the National Park Service will begin to implement the Preferred Alternative contained in the FEIS issued on November 27, 2009. Three alternatives were evaluated in the FEIS, each of which would clarify the rights and responsibilities of researchers and NPS management in connection with the allocation of benefits from valuable discoveries, inventions, and other developments that result from research involving specimens lawfully collected from units of the National Park System. The No Action Alternative allows scientists to use material originating as National Park Service research specimens to conduct research that may lead to commercial products but without any obligation to share the benefits with the National Park Service. Another alternative prohibits scientific research involving National Park Service research specimens that is in any way associated with the development of commercial products. A third alternative, the Environmentally Preferred Alternative, allows the National Park Service and researchers who study material associated with a Scientific Research and Collecting Permit to enter into benefits-sharing agreements on a case-by-case basis before using their research results for any commercial purpose. This Environmentally Preferred Alternative has three considerations regarding the disclosure of financial information: Always disclose, never disclose, or comply with confidentiality laws regarding disclosure. The Preferred Alternative implements the benefits-sharing agreement requirement, while complying with confidentiality laws regarding disclosure of royalty rate or related information.

The Record of Decision includes a statement of the decision made, synopses of other alternatives considered, the basis for the decision, a description of the environmentally preferable alternative, a finding of no impairment of park resources and values, a listing of measures to minimize environmental harm, and an overview of public involvement in the decision-making process.

FOR FURTHER INFORMATION CONTACT: Susan Mills, Benefits-Sharing EIS, Center for Resources, P.O. Box 168, Yellowstone National Park, Wyoming 82190, (307) 344–2203, *benefitseis@nps.gov*.

SUPPLEMENTARY INFORMATION: Copies of the Record of Decision may be obtained from the contact listed above; online at *http://parkplanning.nps.gov* (select "Washington Office" from the park menu and then follow the link for benefits-sharing); in the office of the National Park Service Associate Director for Natural Resource Stewardship and Science, 1849 C Street, NW., Washington, DC; and in the office of the Superintendent, Yellowstone National Park, Wyoming.

Dated: March 5, 2010.

Daniel N. Wenk,

Deputy Director, National Park Service.

[FR Doc. 2010–7871 Filed 4–6–10; 8:45 am]

BILLING CODE P

DEPARTMENT OF THE INTERIOR

Fish and Wildlife Service

[FWS–R7–R–2009–N260; 70133–1265–0000–S3]

Arctic National Wildlife Refuge, Fairbanks, AK

AGENCY: U.S. Fish and Wildlife Service, Interior.

ACTION: Notice of intent to revise the comprehensive conservation plan and prepare an environmental impact statement; request for comment.

SUMMARY: We, the U.S. Fish and Wildlife Service (Service), will be developing a revised comprehensive conservation plan (CCP) and environmental impact statement (EIS) for Arctic National Wildlife Refuge (NWR, Refuge). The Revised CCP will establish goals and objectives, review Refuge rivers for potential recommendation for Congress for inclusion within the National Wild and Scenic Rivers System, and review Refuge lands for potential

recommendation for Congress for inclusion within the National Wilderness Preservation System. We will use the internet, special mailings, public service announcements, newspaper advertisements, and other media to keep people updated throughout the planning process and to provide opportunities for input. We will hold public meetings in communities within and near the Refuge during preparation of the Revised CCP. We will also hold meetings in Anchorage, AK, Fairbanks, AK, and Washington, DC.

DATES: *Meetings:* A public scoping meeting will be held in Washington, DC on May 4, 2010, from 1 to 4 p.m. in the Department of the Interior Auditorium, 1849 C Street, NW., Washington, DC. In addition, we will hold public scoping meetings in Anchorage and Fairbanks, AK and in refuge area communities in Alaska. We will announce these meeting dates, times, and locations locally, at least 10 days prior to each meeting.

Comments: To ensure consideration, please send your written comments on the scope of the CCP revision by June 7, 2010.

ADDRESSES: Information about the Refuge and the Revised CCP is available on the internet at: *http://arctic.fws.gov.* Send your comments or requests for more information by any of the following methods.

E-mail: ArcticRefugeCCP@fws.gov. Include "Arctic NWR CCP" in the subject line of the message.

Fax: Attn: Sharon Seim, Planning Team Leader, (907) 456–0428.

U.S. Mail: Sharon Seim, Planning Team Leader, Arctic National Wildlife Refuge, 101 12th Ave., Rm. 236, Fairbanks, AK 99701.

In-Person Drop-off: You may drop off comments during regular business hours at the above address.

FOR FURTHER INFORMATION CONTACT: Sharon Seim, Planning Team Leader, phone (907) 456–0501.

SUPPLEMENTARY INFORMATION: The Alaska National Interest Lands Conservation Act of 1980 (94 Stat. 2371; ANILCA) requires us to develop a CCP for each refuge in Alaska. The purpose of developing a CCP is to provide refuge managers with a management strategy for achieving refuge purposes and contributing toward the mission of the National Wildlife Refuge System, consistent with sound principles of fish, wildlife, and habitat management and conservation; legal mandates; and Service policies. CCPs define long-term goals and objectives toward which refuge management activities are directed, and identify which uses may be compatible with the purposes of a refuge. CCPs are reviewed and updated in accordance with direction in Section 304(g) of ANILCA and the National Environmental Policy Act (NEPA, 42 U.S.C. 4321 *et seq.*). With this notice, we initiate our process for developing a revised CCP for the Arctic National Wildlife Refuge, Alaska. We furnish this notice in accordance with ANILCA, the National Wildlife Refuge System Administration Act (16 U.S.C. 668dd–668ee), the regulations implementing NEPA (40 CFR 1500–1508), and Service policies. The purpose of this notice is to (1) Advise other Federal and State agencies, Tribes, and the public of our intention to conduct detailed planning on this refuge and (2) obtain suggestions and information on the scope of issues to be considered in the EIS and during the development of the CCP.

Background

The Arctic National Wildlife Refuge is a vast area unique in North America—unique because it encompasses a full range of arctic and subarctic ecosystems that are whole and undisturbed, functioning as they have for centuries, largely free of human control and manipulation. The move to protect this corner of Alaska began in the early 1950s. Conservationists George Collins, Lowell Sumner, and Olaus and Mardy Murie, considered the primary founders of the Refuge, launched a campaign to permanently safeguard the area. Their effort succeeded and the Arctic Refuge was established.

The area originally named "Arctic National Wildlife Range" was created in 1960 by Public Land Order 2214, "[f]or the purpose of preserving unique wildlife, wilderness and recreational values. * * *" The Arctic National Wildlife Refuge is unique among Alaska conservation units because it was the first for which ecological thinking and concern for maintaining natural processes were significant factors in its establishment. It is also the only Alaska refuge for which the preservation of values was a founding purpose.

In 1980, ANILCA enlarged the area, designated much of the original Range as Wilderness, renamed the whole area the Arctic National Wildlife Refuge, and added four complementary purposes. The ANILCA purposes are: (i) To conserve fish and wildlife populations and habitats in their natural diversity, including, but not limited to, the Porcupine caribou herd (including participation in coordinated ecological studies and management of this herd and the Western Arctic caribou herd), polar bears, grizzly bears, muskox, Dall sheep, wolves, wolverines, snow geese, peregrine falcons and other migratory birds, Arctic char, and grayling; (ii) To fulfill the international fish and wildlife treaty obligations of the United States; (iii) To provide the opportunity for continued subsistence uses by local residents; and (iv) To ensure water quality and necessary water quantity within the Refuge.

Refuge Overview

The Arctic National Wildlife Refuge includes nearly 19.3 million acres, three wild rivers, and one of the largest areas of designated Wilderness in the United States. The majestic Brooks Range, with peaks and glaciers to 9,000 feet, dominates the Refuge. These rugged mountains extend east to west in a band 75 miles wide, rising abruptly from a tundra-covered plain. This treeless expanse is cut by numerous braided rivers and streams. South of the continental divide, rivers wind serpentine courses through broad, spruce-covered valleys dotted with lakes and sloughs. Nearly 180 species of birds, 45 species of mammals, and 36 species of fish have been counted on the Arctic Refuge. Vast mountains, diverse wildlife, and a wealth of habitats give this unspoiled national treasure high cultural heritage, scenic, scientific, and experiential values.

Public Involvement

We plan to provide public involvement opportunities in communities within and near the Refuge, as well as in Anchorage and Fairbanks, AK, and Washington, DC. The Washington, DC scoping meeting is scheduled for Tuesday, May 4, from 1 to 4 p.m. in the Department of the Interior Auditorium, 1849 C Street, NW., Washington, DC. With appropriate advance notice, the other scoping meetings will be held between April 17 and May 28, 2010, as weather and other conditions permit. Public notices of scoping meetings will be posted locally and placed on our Web site at *http://arctic.fws.gov.* We will be accepting comments via e-mail, U.S. mail, and telephone, and through personal contacts throughout the planning process.

The public's ideas and comments are an important part of the CCP process, and we invite public participation. The Service is looking for meaningful comments that will help determine the desired future conditions of the Refuge and address the full range of Refuge purposes. Some concerns and interests related to the Refuge will not be addressed in the Revised CCP. For example, the U.S. Congress has reserved for itself in section 1002(i) of the ANILCA, 16 U.S.C. 3142(i), the decision

as to whether or not the Refuge Coastal Plain (also called the 1002 Area) should be made available for oil and gas development. Therefore, the Service does not have the authority to decide this issue, and we will not consider or respond to comments that support or oppose such development during this CCP process.

Public Availability of Comments

All comments we receive, including those from individuals, become part of the public record, and are available to the public upon request. Therefore, before including your name, address, phone number, e-mail address, or other personal identifying information with your comment, you should be aware that your entire comment—including this information—may be made available to the public upon request. While you can ask us in your comment to withhold your personal identifying information from public review, we cannot guarantee that we will be able to do so.

Dated: March 31, 2010.

Geoffrey L. Haskett,

Regional Director, U.S. Fish and Wildlife Service, Anchorage, Alaska.

[FR Doc. 2010–7850 Filed 4–6–10; 8:45 am]

BILLING CODE 4310–55–P

DEPARTMENT OF THE INTERIOR

National Park Service

Termination of Environmental Impact Statement (EIS) for the Special Resource Study (SRS) for Castle Nugent Farms, St. Croix, U.S. Virgin Islands in favor of an Environmental Assessment (EA)

AGENCY: National Park Service, Interior.

ACTION: Notice.

SUMMARY: Pursuant to section 102(2)(C) of the National Environmental Policy Act of 1969, and National Park Service (NPS) policy in Director's Order 2 (Park Planning) and Director's Order 12 (Conservation Planning, Environmental Impact Analysis, and Decision-making), the NPS is terminating the EIS process for the SRS for Castle Nugent Farms, St. Croix, U.S. Virgin Islands. A Notice of Intent to prepare an EIS for the SRS was published in the **Federal Register** on November 21, 2007 (72 FR 65593). The NPS has since determined that an EA rather than an EIS is the appropriate level of environmental documentation for the study.

DATES: The NPS will notify the public by mail, Web site, and other means, of public review periods and meetings associated with the Draft SRS/EA. All public review and other written public information will be made available online at *http://parkplanning.nps.gov/projectHome.cfm?parkID=423&projectId=19240.*

FOR FURTHER INFORMATION CONTACT: John Barrett, Planning Team Leader, Castle Nugent Farms Special Resource Study, NPS Southeast Regional Office, Division of Planning and Compliance, 100 Alabama Street, SW., 6th Floor, 1924 Building, Atlanta, Georgia 30303.

SUPPLEMENTARY INFORMATION: On October 11, 2006, Public Law 109–317 was enacted directing the Secretary of the Interior to conduct an SRS for an area known as Castle Nugent Farms located on the island of St. Croix in the U.S. Virgin Islands. The SRS will determine whether study area should be considered for inclusion in the National Park System. The four required criteria are: National significance, suitability, feasibility, and the appropriateness of direct NPS management. Scoping information meetings for the SRS were conducted in 2007 on the island of St. Croix, U.S. Virgin Islands (USVI). Initial scoping did not result in significant impacts being identified by the public. Thereafter, the NPS planning team developed three preliminary alternatives, including the No Action Alternative (Alternative A—Continuation of Existing Conditions), and two action alternatives (alternatives B and C). The two action alternatives describe NPS management of the area, as follows—Alternative B: an 11,500-acre unit managed by the NPS that would include 8,600 marine acres under the jurisdiction of the Government of the USVI; and Alternative C: a 1,750-acre unit of terrestrial lands managed by the NPS. A preliminary analysis of these alternatives does not indicate that significant impacts will result from implementation of any of the alternatives. These alternatives will be refined through the final stages of the planning process.

Authority: The authority for publishing this notice is contained in 40 CFR 1506.6.

The responsible official is David Vela, Regional Director, Southeast Region, National Park Service, 100 Alabama Street SW., 1924 Building, Atlanta, Georgia 30303.

Dated: February 5, 2010.

David Vela,

Regional Director, Southeast Region.

[FR Doc. 2010–7782 Filed 4–6–10; 8:45 am]

BILLING CODE 4310–70–P

DEPARTMENT OF THE INTERIOR

Bureau of Land Management

[CACA 04880, LLCAD06000, L51010000.FX0000, LVRWB09B2600]

Notice of Availability of the Draft Environmental Impact Statement/Staff Assessment for the Chevron Energy Solutions/Solar Millennium Palen Solar Power Plant (PSPP) and Possible California Desert Conservation Area Plan Amendment

AGENCY: Bureau of Land Management, Interior.

ACTION: Notice of availability.

SUMMARY: In accordance with the National Environmental Policy Act of 1969, as amended, and the Federal Land Policy and Management Act of 1976, as amended, the Bureau of Land Management (BLM) and the California Energy Commission (CEC) have prepared a Draft Environmental Impact Statement (EIS), Draft California Desert Conservation Area (CDCA) Plan Amendment, and Staff Assessment (SA) as a joint environmental analysis document for the Chevron Energy Solutions/Solar Millennium (CESSM) Palen Solar Power Plant (PSPP) Project, Riverside County, California, and by this notice are announcing the opening of the comment period.

DATES: To ensure that comments will be considered, the BLM must receive written comments on the Draft EIS/SA and Plan Amendment within 90 days following the date the Environmental Protection Agency publishes its Notice of Availability in the **Federal Register.** The BLM will announce future meetings or hearings and any other public involvement activities at least 15 days in advance through public notices, media releases, and/or mailings.

ADDRESSES: You may submit comments related to the PSPP Project by any of the following methods:

- E-mail: *CAPSSolarPalen@blm.gov.*
- Fax: (760) 833–7199.
- Mail or other delivery service: Allison Shaffer, Project Manager, Palm Springs South Coast Field Office, Bureau of Land Management, 1201 Bird Center Drive, Palm Springs, California 92262.

FOR FURTHER INFORMATION CONTACT: Allison Shaffer, BLM Project Manager at (760) 833–7100. See also **ADDRESSES** section.

SUPPLEMENTARY INFORMATION: CESSM has submitted a right-of-way (ROW) application to the BLM for development of the proposed PSPP Project, consisting of two parabolic-trough solar thermal

power plants, each of which has a "solar field" comprised of rows of parabolic mirrors focusing solar energy on collector tubes. The tubes would carry heated oil to a boiler that sends live steam to a steam turbine. The project would be built in two phases which are designed to generate in total approximately 500 megawatts (MW) of electricity at full development. The proposed ROW would encompass approximately 5,200 acres; the disturbed area would encompass approximately 2,970 acres. The project site is in Riverside County, California, approximately 10 miles east of Desert Center along Interstate 10 approximately halfway between the cities of Indio and Blythe.

The major components and features of the proposed PSPP include the two power plants, an access road, operations facilities (office, warehouse, etc.), a switchyard, an electrical transmission line (which will connect to Southern California Edison's planned Red Bluff substation, approximately ten miles west of the Palen project site), and two water wells. This dry-cooled power plant would use approximately 300 acre-feet of water per year for feed water makeup, dust control, domestic uses, and mirror washing, obtained from on-site water wells.

The BLM's purpose and need for the PSPP project is to respond to CESSM's application under Title V of the Federal Land Policy and Management Act (FLPMA) (43 U.S.C. 1761) for a ROW grant to construct, operate, and decommission a solar thermal facility on public lands in compliance with FLPMA, the BLM ROW regulations, and other applicable Federal laws. The BLM will decide whether to grant, grant with modification, or deny a ROW to CESSM for the proposed PSPP project. The BLM is proposing to amend the CDCA Plan by designating the project area as either available or unavailable for solar energy projects. The CDCA Plan (1980, as amended), while recognizing the potential compatibility of solar generation facilities with other uses on public lands, requires that all sites proposed for power generation or transmission not already identified in the plan be considered through the plan amendment process. If the BLM decides to grant a ROW for this project, the CDCA Plan would be amended as required. In response to the application received from CESSM, the BLM's proposed action is to authorize the CESSM PSPP project, amend the CDCA Plan to designate the project area as available for solar energy projects, and amend the Plan to approve this project.

In addition to the proposed action, the BLM is analyzing the following action alternatives: A reconfigured, 500–MW alternative and a smaller 425–MW alternative, both of which would amend the CDCA Plan to designate the area as available for solar energy projects and approve this project. As required under the National Environmental Policy Act (NEPA), the Draft EIS analyzes a no action alternative that would not require a CDCA Plan amendment. The Draft EIS also analyzes two no project alternatives that reject the project, but amend the CDCA Plan to: (1) Designate the project area as available to future solar energy power generation projects; or (2) designate the project area as unavailable to future solar energy power generation projects. The BLM will take into consideration the provisions of the Energy Policy Act of 2005 and Secretarial Orders 3283 *Enhancing Renewable Energy Development on the Public Lands* and 3285 *Renewable Energy Development by the Department of the Interior* in responding to the PSPP application.

The BLM has entered into a Memorandum of Understanding with the CEC to conduct a joint environmental review of solar thermal projects that are proposed on Federal land managed by the BLM, with the CEC as the lead agency preparing the environmental documents. The BLM and CEC have agreed to conduct joint environmental review of the project in a single combined NEPA/California Environmental Quality Act process and document. The Draft EIS/SA analyzes site-specific impacts of the proposed project on air quality; biological, cultural, water, soil, visual, paleontological, and geological resources; recreation; land use; noise; public health; socioeconomics; and traffic and transportation. The Draft EIS/SA also addresses hazardous materials handling, waste management worker safety, fire protection, facility design engineering, efficiency, reliability, transmission system engineering, transmission line safety, and nuisance. A Notice of Intent to Prepare an EIS/SA and Proposed Land Use Plan Amendment for the Proposed CESSM PSPP in Riverside County, California was published November 23, 2008 (73 FR 61902). The BLM held one public scoping meeting in Palm Desert, California, on December 11, 2008. The formal scoping period ended December 23, 2009. The CEC held an Informational Hearing, Environmental Scoping Meeting, and Public Site Visit in cooperation with the BLM on January 25, 2010.

Please note that public comments and information submitted including names, street addresses, and e-mail addresses of persons who submit comments will be available for public review and disclosure at the above address during regular business hours (8 a.m. to 4 p.m.), Monday through Friday, except holidays.

Before including your address, phone number, e-mail address, or other personal identifying information in your comment, you should be aware that your entire comment—including your personal identifying information—may be made publicly available at any time. While you can ask us in your comment to withhold your personal identifying information from public review, we cannot guarantee that we will be able to do so.

Authority: 40 CFR 1506.6 and 1506.10 and 43 CFR 1610.2

Thomas Pogacnik,

Deputy State Director.

[FR Doc. 2010–7833 Filed 4–6–10; 8:45 am]

BILLING CODE 4310–40–P

DEPARTMENT OF THE INTERIOR

National Park Service

National Register of Historic Places; Weekly Listing of Historic Properties

Pursuant to (36 CFR 60.13(b,c)) and (36 CFR 63.5), this notice, through publication of the information included herein, is to apprise the public as well as governmental agencies, associations and all other organizations and individuals interested in historic preservation, of the properties added to, or determined eligible for listing in, the National Register of Historic Places from January 18 to January 22, 2010.

For further information, please contact Edson Beall via: United States Postal Service mail, at the National Register of Historic Places, 2280, National Park Service, 1849 C St. NW., Washington, DC 20240; in person (by appointment), 1201 Eye St., NW., 8th floor, Washington DC 20005; by fax, 202–371–2229; by phone, 202–354–2255; or by e-mail, *Edson_Beall@nps.gov.*

Dated: April 1, 2010.

J. Paul Loether,

Chief, National Register of Historic Places/National Historic Landmarks Program.

KEY: State, County, Property Name, Address/Boundary, City, Vicinity, Reference Number, Action, Date, Multiple Name

ARKANSAS

Boone County

Twelve Oaks, 7210 AR 7 S, Harrison, 09001237, LISTED, 1/20/10

Carroll County

Sanitarium Lake Bridges Historic District, Carroll Co. Rd. 317, approx. .5 mi. S. of Greenwood Hollow Rd., Eureka Springs vicinity, 09001238, LISTED, 1/19/10 (Historic Bridges of Arkansas MPS)

Clark County

DeGray Creek Bridge, Co. Rd. 50 over DeGray Creek, Arkadelphia, 09001239, LISTED, 1/21/10 (Historic Bridges of Arkansas MPS)

Columbia County

Cross and Nelson Hall Historic District, Southern Arkansas University Campus at 100 E. University, Magnolia, 09001240, LISTED, 1/20/10 (New Deal Recovery Efforts in Arkansas MPS)

Crawford County

Lee Creek Bridge, W. of W. Rena Rd. over Lee Creek, Van Buren, 09001241, LISTED, 1/21/10 (Historic Bridges of Arkansas MPS)

Old U.S. 64—Van Buren Segment, Oak Ln. N. of US 64, Van Buren, 09001242, LISTED, 1/21/10 (Arkansas Highway History and Architecture MPS)

Crittenden County

Riverside Speedway, 151 Legion Rd., West Memphis, 09001243, LISTED, 1/21/10

Wilson Power and Light Company Ice Plant, 120 E. Broadway St., West Memphis, 09001244, LISTED, 1/21/10

Desha County

McGehee Post Office, 201 N. Second St., McGehee, 09001245, LISTED, 1/19/10

Garland County

Malco Theatre, 817 Central Ave., Hot Springs, 09001246, LISTED, 1/21/10

Hempstead County

Southwestern Proving Ground Building No. 5, 259 Hempstead Co. Rd. 279, Hope vicinity, 09001247, LISTED, 1/21/10 (World War II Home Front Efforts in Arkansas, MPS)

Independence County

Central Avenue Bridge, AR 69 over Polk Bayou, Batesville, 09001248, LISTED, 1/21/10 (Historic Bridges of Arkansas MPS)

Miller Creek Bridge, Co. Rd. 86 over Miller Creek, Batesville vicinity, 09001249, LISTED, 1/21/10 (Historic Bridges of Arkansas MPS)

Jefferson County

Taylor Field, 1201 E. 16th St., Pine Bluff, 09001250, LISTED, 1/21/10 (New Deal Recovery Efforts in Arkansas MPS)

Lawrence County

Commandant's House, 264 McClellan Dr., Walnut Ridge, 09001251, LISTED, 1/21/10 (World War II Home Front Efforts in Arkansas, MPS)

Logan County

Liberty Schoolhouse, 12682 Spring Lake Rd., Corley vicinity, 09001252, LISTED, 1/21/10

Marion County

Crooked Creek Bridge, US 62 Spur N. over Crooked Creek, Pyatt, 09001253, LISTED, 1/21/10 (Historic Bridges of Arkansas MPS)

Miller County

Beech Street Historic District, Roughly Beech St. between 14th and 23rd Sts., Texarkana, 09001254, LISTED, 1/20/10

Newton County

Jasper Commercial Historic District, Roughly bounded by Sycamore St., E. Elm St., N. Spring St., and Clark St., Jasper, 09001255, LISTED, 1/21/10

Ouachita County

Washington Street Historic District, 404–926 W. Washington, 619–816 Graham, 116–132 N. Cleveland, 131–139 N. Agee and 132 N. California, Camden, 09001256, LISTED, 1/22/10

Poinsett County

Poinsett Lumber and Manufacturing Company Manager's House, 512 Poinsett Ave., Trumann, 09001257, LISTED, 1/21/10

Pulaski County

Seed Warehouse No. 5, SW corner of US 165 and AR 161, Scott, 09001259, LISTED, 1/21/10 (Cotton and Rice Farm History and Architecture in the Arkansas Delta MPS)

Van Buren County

Middle Fork of the Little Red River Bridge, Co. Rd. 125 over the Middle Fork of the Little Red River, Shirley vicinity, 09001260, LISTED, 1/21/10

Washington County

Cane Hill Road Bridge, AR 170 over the Little Red River, Prairie Grove vicinity, 09001261, LISTED, 1/21/10 (Historic Bridges of Arkansas MPS)

Clinton House, 930 S. California Blvd., Fayetteville, 09000800, LISTED, 1/22/10

Goff Farm Stone Bridge, Goff Farm Rd. approx. ½ mi. E. of Dead Horse Mountain Rd., Fayetteville vicinity, 09001262, LISTED, 1/21/10 (Historic Bridges of Arkansas MPS)

Yell County

Petit Jean River Bridge, Co. Rd. 49 over the Petit Jean River, Ola vicinity, 09001263, LISTED, 1/21/10 (Historic Bridges of Arkansas MPS)

CALIFORNIA

Los Angeles County

Pegfair Estates Historic District, 1525–1645 Pegfair Estates Dr.; 1335–1345 Carnarvon Dr., Pasadena, 09001223, LISTED, 1/18/10 (Cultural Resources of the Recent Past, City of Pasadena)

DISTRICT OF COLUMBIA

District of Columbia State Equivalent

Fort View Apartments, 6000–6020 and 6030–6050 13th Place, N.W., Washington, 09001264, LISTED, 1/21/10 (Apartment Buildings in Washington, DC, MPS)

MISSOURI

Greene County

Springfield Public Square Historic District (Boundary Increase), E. side Public Square, part of the 300 block Park Central E., N. side of 200 block of W. Olive, Springfield, 09000281, LISTED, 1/13/10 (Springfield MPS)

NEW YORK

Columbia County

New Concord Historic District, Co. Rt. 9, New Concord, 09001268, LISTED, 1/19/10

Orange County

Balmville Cemetery, Albany Post Rd., Balmville vicinity, 09001229, LISTED, 1/19/10

Saratoga County

Victory Mills, 42 Gates Ave., Schuylerville vicinity, 09001271, LISTED, 1/19/10

NORTH DAKOTA

Grand Forks County

University of North Dakota Historic District, University of North Dakota, Grand Forks, 08001233, LISTED, 1/13/10

WISCONSIN

Brown County

South Broadway Historic District, 101–129 (odd only) S. Broadway, De Pere, 09001272, LISTED, 1/21/10

Milwaukee County

Milwaukee County Parkway System MPS, 64501057, COVER DOCUMENTATION ACCEPTED, 1/12/10

Walworth County

Whitewater Hotel, 226 W. Whitewater St., Whitewater, 09001273, LISTED, 1/21/10

[FR Doc. 2010–7834 Filed 4–6–10; 8:45 am]

BILLING CODE 4312–51–P

DEPARTMENT OF THE INTERIOR

National Park Service

National Register of Historic Places; Notification of Pending Nominations and Related Actions

Nominations for the following properties being considered for listing or related actions in the National Register were received by the National Park Service before March 20th, 2010. Pursuant to § 60.13 of 36 CFR part 60 written comments concerning the significance of these properties under the National Register criteria for evaluation may be forwarded by United States Postal Service, to the National Register of Historic Places, National Park Service, 1849 C St., NW., 2280, Washington, DC 20240; by all other carriers, National Register of Historic

Places, National Park Service, 1201 Eye St., NW., 8th floor, Washington, DC 20005; or by fax, 202–371–6447. Written or faxed comments should be submitted by April 22, 2010.

Before including your address, phone number, e-mail address, or other personal identifying information in your comment, you should be aware that your entire comment—including your personal identifying information—may be made publicly available at any time. While you can ask us in your comment to withhold your personal identifying information from public review, we cannot guarantee that we will be able to do so.

J. Paul Loether,

Chief, National Register of Historic Places/ National Historic Landmarks Program.

ARKANSAS

Arkansas County

DeWitt Commercial Historic District, Roughly bounded by N. Washington, 2nd St., S. Adams and Gibson Ave., DeWitt, 10000213

Pulaski County

Oakland-Fraternal Cemetery, 2101 Barber St., Little Rock, 10000214

COLORADO

Denver County

Colorado National Bank Building, 918 17th St., Denver, 10000215

Morgan County

Lincoln School, 914 State St., Fort Morgan, 10000216

Routt County

Chamber of Commerce Building, 1201 Lincoln Ave, Steamboat Springs, 10000217

MAINE

Penobscot County

University of Maine Historic District Boundary Increase, Roughly bounded by the Mall, College Ave, lower Munson and Long Rds, Orono, 10000228

York County

Clifford, George F., House, 17 High Rd, Cornish, 10000230

MICHIGAN

Chippewa County

Adams Building, 418 Ashmun St., Sault Ste. Marie, 10000218

Gowan Block, 416 Ashmun St., Sault Ste. Marie, 10000219

Lenawee County

Clinton Downtown Historic District, 101–151 and 104–172 W. Michigan Ave. plus Memorial Park, Clinton, 10000220

MISSOURI

Boone County

West Broadway Historic District, 300–922 W. Broadway (except 800, 808, 812), Columbia, 10000221

NEW YORK

Broome County

Drovers Inn and Round Family Residence, 2 Pumphouse Rd and 301 Main St, Vestal, 10000222

Cayuga County

Owasco Reformed Church, 5105 Rte 38A (E. Lake Rd.), Owasco, 10000223

NEW YORK

Kings County

Temple Beth El of Borough Park, 4802 15th Ave, Brooklyn, 10000224

New York County

Elmendorf Reformed Church, 171 E. 121st St., New York, 10000225

Onondaga County

C.G. Meaker Food Company Warehouse, (Industrial Resources in the City of Syracuse, Onondaga County, NY MPS), 538 Erie Blvd. W., Syracuse, 10000226

Orange County

Lower Dock Hill Road Stone Arch Bridge (Stone Arch Bridges of the Village of Cornwall-on-Hudson, New York), Dock Hill Rd, Cornwall-on-Hudson, 10000227

Warren County

Gates Homestead, 4617 Lakeshore Dr. (NY 9N), Bolton, 10000229

SOUTH CAROLINA

Beaufort County

Fort Fremont Battery, Bay Point Rd., .3 mi. from Land's End Rd., St. Helena Island, 88001821

WISCONSIN

Dane County

McCormick-International Harvester Company Branch House, 301 South Blount St., Madison, 10000231

Portage County

Rosholt, John Gilbert, House, 327 N. Main St., Rosholt, 10000232

Request for REMOVAL has been made for the following resources:

MAINE

Franklin County

Farmington Historic District, Abbott, Jacob, House, Main St., Farmington, 7300103

Franklin County

Abbott, Jacob, House, Main St., Farmington, 94001551

Hancock County

Atlantic Schoolhouse, S. Side of Town Rd., Swan's Island, 95001547

OREGON

Curry County

Site 35–CU–156, Address Restricted, Brookings, 97001047

PENNSYLVANIA

Chester County

Bridge in New Garden Township, Landenberg Rd. over White Clay Creek, Landenberg, 88000804

[FR Doc. 2010–7835 Filed 4–6–10; 8:45 am]

BILLING CODE P

INTERNATIONAL TRADE COMMISSION

[Investigation No. 731–TA–1178 (Preliminary)]

Glyphosate From China

AGENCY: United States International Trade Commission.

ACTION: Institution of antidumping investigation and scheduling of a preliminary phase investigation.

SUMMARY: The Commission hereby gives notice of the institution of an investigation and commencement of preliminary phase antidumping investigation No. 731–TA–1178 (Preliminary) under section 733(a) of the Tariff Act of 1930 (19 U.S.C. 1673b(a)) (the Act) to determine whether there is a reasonable indication that an industry in the United States is materially injured or threatened with material injury, or the establishment of an industry in the United States is materially retarded, by reason of imports from China of glyphosate, provided for in subheadings 2931.00.90 and 3808.93.50 of the Harmonized Tariff Schedule of the United States, that are alleged to be sold in the United States at less than fair value. Unless the Department of Commerce extends the time for initiation pursuant to section 732(c)(1)(B) of the Act (19 U.S.C. 1673a(c)(1)(B)), the Commission must reach a preliminary determination in antidumping investigations in 45 days, or in this case by May 17, 2010. The Commission's views are due at Commerce within five business days thereafter, or by May 24, 2010.

For further information concerning the conduct of this investigation and rules of general application, consult the Commission's Rules of Practice and Procedure, part 201, subparts A through E (19 CFR part 201), and part 207, subparts A and B (19 CFR part 207).

DATES: *Effective Date:* March 31, 2010.

FOR FURTHER INFORMATION CONTACT: Amy Sherman (202–205–3289), Office of Investigations, U.S. International

Trade Commission, 500 E Street, SW., Washington, DC 20436. Hearing-impaired persons can obtain information on this matter by contacting the Commission's TDD terminal on 202–205–1810. Persons with mobility impairments who will need special assistance in gaining access to the Commission should contact the Office of the Secretary at 202–205–2000. General information concerning the Commission may also be obtained by accessing its Internet server (*http://www.usitc.gov*). The public record for this investigation may be viewed on the Commission's electronic docket (EDIS) at *http://edis.usitc.gov.*

SUPPLEMENTARY INFORMATION:

Background. This investigation is being instituted in response to a petition filed on March 31, 2010, by Albaugh, Inc., Ankeny, IA.

Participation in the investigation and public service list. Persons (other than petitioners) wishing to participate in the investigation as parties must file an entry of appearance with the Secretary to the Commission, as provided in sections 201.11 and 207.10 of the Commission's rules, not later than seven days after publication of this notice in the **Federal Register**. Industrial users and (if the merchandise under investigation is sold at the retail level) representative consumer organizations have the right to appear as parties in Commission antidumping investigations. The Secretary will prepare a public service list containing the names and addresses of all persons, or their representatives, who are parties to this investigation upon the expiration of the period for filing entries of appearance.

Limited disclosure of business proprietary information (BPI) under an administrative protective order (APO) and BPI service list. Pursuant to section 207.7(a) of the Commission's rules, the Secretary will make BPI gathered in this investigation available to authorized applicants representing interested parties (as defined in 19 U.S.C. 1677(9)) who are parties to the investigation under the APO issued in the investigation, provided that the application is made not later than seven days after the publication of this notice in the **Federal Register**. A separate service list will be maintained by the Secretary for those parties authorized to receive BPI under the APO.

Conference. The Commission's Director of Investigations has scheduled a conference in connection with this investigation for 9:30 a.m. on April 22, 2010, at the U.S. International Trade Commission Building, 500 E Street, SW., Washington, DC. Parties wishing to participate in the conference should contact Amy Sherman (202–205–3289) not later than April 19, 2010, to arrange for their appearance. Parties in support of the imposition of antidumping duties in this investigation and parties in opposition to the imposition of such duties will each be collectively allocated one hour within which to make an oral presentation at the conference. A nonparty who has testimony that may aid the Commission's deliberations may request permission to present a short statement at the conference.

Written submissions. As provided in sections 201.8 and 207.15 of the Commission's rules, any person may submit to the Commission on or before April 27, 2010, a written brief containing information and arguments pertinent to the subject matter of the investigation. Parties may file written testimony in connection with their presentation at the conference no later than three days before the conference. If briefs or written testimony contain BPI, they must conform with the requirements of sections 201.6, 207.3, and 207.7 of the Commission's rules. The Commission's rules do not authorize filing of submissions with the Secretary by facsimile or electronic means, except to the extent permitted by section 201.8 of the Commission's rules, as amended, 67 FR 68036 (November 8, 2002). Even where electronic filing of a document is permitted, certain documents must also be filed in paper form, as specified in II(C) of the Commission's Handbook on Electronic Filing Procedures, 67 FR 68168, 68173 (November 8, 2002).

In accordance with sections 201.16(c) and 207.3 of the rules, each document filed by a party to the investigation must be served on all other parties to the investigation (as identified by either the public or BPI service list), and a certificate of service must be timely filed. The Secretary will not accept a document for filing without a certificate of service.

Authority: This investigation is being conducted under authority of title VII of the Tariff Act of 1930; this notice is published pursuant to section 207.12 of the Commission's rules.

Issued: April 1, 2010.

By order of the Commission.

William R. Bishop,

Acting Secretary to the Commission.

[FR Doc. 2010–7809 Filed 4–6–10; 8:45 am]

BILLING CODE P

INTERNATIONAL TRADE COMMISSION

[Investigation No. 337–TA–679]

In the Matter of Certain Products Advertised as Containing Creatine Ethyl Ester; Notice of Commission Issuance of a Limited Exclusion Order Against the Products Advertised as Containing Creatine Ethyl Ester of Respondents Found in Default; Issuance of Cease and Desist Orders

AGENCY: U.S. International Trade Commission.

ACTION: Notice.

SUMMARY: Notice is hereby given that the U.S. International Trade Commission has issued a limited exclusion order and cease and desist orders against four respondents found in default in the above-captioned investigation under section 337 of the Tariff Act of 1930, as amended, 19 U.S.C. 1337.

FOR FURTHER INFORMATION CONTACT: James A. Worth, Office of the General Counsel, U.S. International Trade Commission, 500 E Street, SW., Washington, DC 20436, telephone (202) 205–3065. Copies of non-confidential documents filed in connection with this investigation are or will be available for inspection during official business hours (8:45 a.m. to 5:15 p.m.) in the Office of the Secretary, U.S. International Trade Commission, 500 E Street, SW., Washington, DC 20436, telephone (202) 205–2000. General information concerning the Commission may also be obtained by accessing its Internet server (*http://www.usitc.gov*). The public record for this investigation may be viewed on the Commission's electronic docket (EDIS) at *http://edis.usitc.gov.* Hearing-impaired persons are advised that information on this matter can be obtained by contacting the Commission's TDD terminal on (202) 205–1810.

SUPPLEMENTARY INFORMATION: This investigation was instituted on June 23, 2009, based upon a complaint filed on behalf of UneMed Corp. of Omaha, Nebraska ("UneMed") on June 5, 2009, and supplemented on June 8 and 10, 2009. 74 FR 29717 (June 23, 2009). The complaint alleged violations of section 337(a)(1)(A) of the Tariff Act of 1930 (19 U.S.C. 1337) in the importation into the United States, the sale for importation, and the sale within the United States after importation of certain products advertised as containing creatine ethyl ester by reason of false advertising in violation of Section 43(a) of the Lanham Act, 15 U.S.C. 1125(a)(1)(B) and the

Nebraska Uniform Deceptive Trade Practices Act, R.R.S. Neb. § 87–302 (2008). The complaint named as respondents Bodyonics, Ltd. of Hicksville, New York ("Bodyonics"); EST Nutrition LLC d/b/a Engineered Sport Technology, Inc. of Oviedo, Florida ("EST"); Proviant Technologies, Inc. of Champagne, Illinois ("Proviant"); NRG–X Labs. of Bentonville, Arkansas ("NRG–X"); and San Corporation of Oxnard, California.

On September 29, 2009, the Commission issued notice of its decision not to review an ID terminating the investigation with respect to San Corporation on the basis of a consent order.

On October 19, 2009, the Commission issued notice of its determination not to review an ID finding Bodyonics, NRG–X, and Proviant in default. On December 23, 2009, the Commission issued notice of its determination not to review an ID finding respondent EST in default, and requesting briefing on remedy, the public interest, and bonding with respect to the respondents found in default. 74 FR 69146 (Dec. 30, 2009).

On January 6, 2010, UneMed submitted briefing, requesting a limited exclusion order, cease and desist orders, and bonding at the level of 100 percent of entered value during the period of Presidential review. Also on January 6, 2010, the Commission investigative attorney (IA) submitted briefing, proposing the same.

The Commission found that each of the statutory requirements of section 337(g)(1)(A)–(E), 19 U.S.C. 1337(g)(1)(A)–(E), has been met with respect to the defaulting respondents. Accordingly, pursuant to section 337(g)(1), 19 U.S.C. 1337(g)(1), and Commission rule 210.16(c), 19 CFR 210.16(c), the Commission presumed the facts alleged in the complaint to be true.

The Commission determined that the appropriate form of relief in this investigation includes a limited exclusion order prohibiting the unlicensed entry of certain products advertised as containing creatine ethyl ester by reason of false advertising in violation of Section 43(a) of the Lanham Act, 15 U.S.C. 1125(a)(1)(B) and the Nebraska Uniform Deceptive Trade Practices Act, R.R.S. Neb. § 87–302 (2008). The order covers certain products advertised as containing creatine ethyl ester that are manufactured abroad by or on behalf of, or imported by or on behalf of, respondents Bodyonics, EST, Proviant, or NRG–X, or any of their affiliated companies, parents, subsidiaries, or other related business entities, or their successors or assigns. The Commission also determined to issue cease and desist orders prohibiting domestic respondents Bodyonics, EST, Proviant, or NRG–X from importing, selling, marketing, advertising, distributing, offering for sale, transferring (except for exportation), and soliciting U.S. agents or distributors for certain products advertised as containing creatine ethyl ester. The Commission further determined that the public interest factors enumerated in section 337(g)(1), 19 U.S.C. 1337(g)(1), do not preclude issuance of the limited exclusion order and cease and desist orders. Finally, the Commission determined that the bond under the limited exclusion order during the period of Presidential review shall be in the amount of 100 percent of the entered value of the imported articles. The Commission's orders were delivered to the President and the United States Trade Representative on the day of their issuance.

The Commission has therefore terminated this investigation. The authority for the Commission's determination is contained in section 337 of the Tariff Act of 1930, as amended (19 U.S.C. 1337), and sections 210.16(c) and 210.41 of the Commission's Rules of Practice and Procedure (19 CFR 210.16(c) and § 210.41).

Issued: April 1, 2010.

By order of the Commission.

William R. Bishop,

Acting Secretary to the Commission.

[FR Doc. 2010–7829 Filed 4–6–10; 8:45 am]

BILLING CODE P

DEPARTMENT OF JUSTICE

Notice of Lodging of Consent Decree Under the Comprehensive Environmental Response, Compensation, and Liability Act (CERCLA)

Consistent with 28 CFR 50.7, notice is hereby given that on April 1, 2010, a Consent Decree in *United States* v. *Exxon Mobil Corporation and Holcim (US) Inc.,* Civil Action No. 3:10–cv–00222–RET–CN, was lodged with the United States District Court for the Middle District of Louisiana.

In a complaint that was filed simultaneously with the Consent Decree, the United States sought from Exxon Mobil Corporation and from Holcim (US) Inc. costs incurred by the United States in response to the release or threatened release of hazardous substances at the Coastal Radiation Services Superfund Site in San Gabriel, Iberville Parish, Louisiana. (The United States alleges that Holcim is liable as a result of its acquisition of and merger with Ideal Basic Industries, formerly known as Ideal Cement Company.) The Site, located in part at 6745 Bayou Paul Road, San Gabriel, Louisiana, was contaminated with radioactive substances, primarily cesium-137 and thorium-232. The United States Environmental Protection Agency removed 111 tons of non-hazardous debris and 4,415 cubic yards of radioactive soil and debris. Demobilization was complete on January 4, 2004. As of October 31, 2007, EPA had unreimbursed costs of $7,542,587.

Pursuant to the Consent Decree, Exxon Mobil Corporation will pay the United States $4,200,000 and Holcim (US) Inc. will pay the United States $600,000.

The Department of Justice will receive comments relating to the Consent Decree for a period of thirty (30) days from the date of this publication. Comments should be addressed to the Assistant Attorney General, Environment and Natural Resources Division, P.O. Box 7611, U.S. Department of Justice, Washington, DC 20044–7611, or submitted via e-mail to *pubcomment-ees.enrd@usdoj.gov,* and should refer to *United States* v. *Exxon Mobil Corporation and Holcim (US) Inc.,* D.J. Ref. No. 90–11–3–07861/1.

The Consent Decree may be examined at the Offices of the U.S. Environmental Protection Agency, Region 6, 1445 Ross Avenue, Dallas, Texas. During the public comment period, the Consent Decree may also be examined on the following Department of Justice Web site: *http://www.usdoj.gov/enrd/Consent_Decrees.html.* A copy of the Consent Decree may also be obtained by mail from the Consent Decree Library, P.O. Box 7611, U.S. Department of Justice, Washington, DC 20044–7611 or by faxing or e-mailing a request to Tonia Fleetwood (*tonia.fleetwood@usdoj.gov*), fax number (202) 514–0097, phone confirmation number (202) 514–1547. In requesting a copy from the Consent Decree Library, please enclose a check in the amount of $7.00 (25 cents per page reproduction cost) payable to the U.S. Treasury.

Maureen M. Katz,

Assistant Section Chief, Environmental Enforcement Section, Environment and Natural Resources Division.

[FR Doc. 2010–7825 Filed 4–6–10; 8:45 am]

BILLING CODE 4410–15–P

DEPARTMENT OF LABOR

Comment Request for Information Collection for Jobs for Veterans Act Priority of Service Provisions: OMB Control No. 1205–0468, Extension Without Revisions

AGENCY: Employment and Training Administration.

ACTION: Notice.

SUMMARY: The Department of Labor, as part of its continuing effort to reduce paperwork and respondent burden conducts a preclearance consultation program to provide the general public and federal agencies with an opportunity to comment on proposed and/or continuing collections of information in accordance with the Paperwork Reduction Act of 1995 (PRA95) [44 U.S.C. 3506(c)(2)(A)]. This program helps to ensure that requested data can be provided in the desired format, reporting burden (time and financial resources) is minimized, collection instruments are clearly understood, and the impact of collection requirements on respondents can be properly assessed. Currently, the Employment and Training Administration is soliciting comments concerning the extension of OMB Control No. 1205–0468, Jobs for Veterans Act, Priority of Service Provisions (currently expires July 31, 2010).

A copy of the proposed Information Collection Request (ICR) can be obtained by contacting the office listed below in the addressee section of this notice.

DATES: Written comments must be submitted to the office listed in the addressee's section below on or before June 7, 2010.

ADDRESSES: Submit written comments to Michael Qualter, Office of Workforce Investment, Room S–4209, Employment and Training Administration, 200 Constitution Avenue, NW., Washington, DC 20210. *Telephone number:* 202–693–3014 (this is not a toll-free number). *Fax:* 202–693–3587. *E-mail: Qualter.Michael@dol.gov, subject line:* JVA Priority of Services ICR Extension.

SUPPLEMENTARY INFORMATION:

I. Background

The Jobs for Veterans Act of 2002 enacted a new priority of service requirement for veterans and eligible spouses in all DOL-funded employment and training programs (codified at 38 U.S.C. 4215). The Department of Labor (DOL) has implemented that requirement through issuance of a final rule at 20 CFR Part 1010, which took effect on January 19, 2009. In conjunction with the issuance of the final rule on priority of service, DOL also published an ICR which was approved by OMB under OMB Control Number 1205–0468. Prior to the publication of the Final Rule on December 19, 2008, DOL had received OMB approval of the Workforce Investment Streamlined Performance Reporting (WISPR) System, under OMB Control Number 1205–0469.

The Department originally intended that both of these new requirements would be implemented for PY 2009. To minimize the impact of these requirements upon the States, it also was DOL's intent to implement the specific priority of service reporting requirement in conjunction with the implementation of the generic integrated reporting and performance measurement requirement. However, the approval of the priority of service reporting requirement also includes a back-up plan for collecting the required information within the context of the current reporting and performance measurement systems. Early in 2009, DOL, with OMB's concurrence, delayed the implementation of both requirements in light of the impact of the current recession on the public workforce system, as well as the impact of the various initiatives authorized under the American Reinvestment and Recovery Act (ARRA), in response to the recession.

It is the Department's intent to implement both reporting requirements as soon as circumstances permit. Therefore, this extension is requested so that the DOL will retain the option to implement the priority of service reporting requirement as soon as possible, whether in conjunction with the implementation of the new system or independently within the context of the current reporting and performance measurement systems.

II. Review Focus

The Department of Labor is particularly interested in comments which:

- Evaluate whether the proposed collection of information is necessary for the proper performance of the functions of the agency, including whether the information will have practical utility;
- Evaluate the accuracy of the agency's estimate of the burden of the proposed collection of information, including the validity of the methodology and assumptions used;
- Enhance the quality, utility, and clarity of the information to be collected; and
- Minimize the burden of the collection of information on those who are to respond, including through the use of appropriate automated, electronic, mechanical, or other technological collection techniques or other forms of information technology, *e.g.,* permitting electronic submissions of responses.

III. Current Actions

Type of Review: Extension without change.

Title: Jobs for Veterans Act Priority of Services Provisions.

OMB Number: 1205–0468.

Affected Public: Administrators of qualified job training programs, as defined in the Jobs for Veterans Act, Section 4215(a)(2), Covered Entrants, and New Covered Participants.

Form(s): Priority of Service Aggregate Quarterly Report and Individual Record Data Elements.

Total Respondents: 237.

Frequency: Quarterly.

Total Annual Responses: 948 (237 × 4 times per year).

Average Time per Response: 168.7 hours (includes the time needed to complete over 1.5 million individual records).

Estimated Total Annual Burden Hours: 159,429.

Total Burden Cost for Respondents: 0.

Comments submitted in response to this comment request will be summarized and/or included in the request for the Office of Management and Budget's approval of this information collection request; they will also become a matter of public record.

Signed: at Washington, DC, this 1st day of April 2010.

Jane Oates,

Assistant Secretary, Employment and Training Administration.

[FR Doc. 2010–7816 Filed 4–6–10; 8:45 am]

BILLING CODE 4510–FN–P

DEPARTMENT OF LABOR

Employment and Training Administration

American Recovery and Reinvestment Act of 2009; Notice of Availability of Funds and Solicitation for Grant Applications for Category 1—Healthcare Virtual Career Platform (HVCP) and Category 2—Enhancing the Ability of Community- and Faith-Based Organizations To Deliver Virtual Career Exploration Services, Including Healthcare Careers

AGENCY: Employment and Training Administration, U.S. Department of Labor.

Announcement Type: Notice of Solicitation for Grant Applications.

Funding Opportunity Number: SGA/DFA PY 09–09

Catalog of Federal Domestic Assistance (CFDA) Number: 17.275.

SUMMARY: The Employment and Training Administration (ETA), U.S. Department of Labor (DOL, or the Department), announces the availability of approximately $13.2 million in grant funds authorized by the American Recovery and Reinvestment Act of 2009 (the Recovery Act) for projects that use virtual service-delivery models to promote career opportunities in the healthcare sector.

This Solicitation provides applicants with the option to choose from two categories to submit a single grant application. These categories are:

Category 1—Healthcare Virtual Career Platform (HVCP) and

Category 2—Enhancing the Ability of Community- and Faith-Based Organizations to Deliver Virtual Career Exploration Services, Including Healthcare Careers

Grants to support the above mentioned categories will be awarded through a competitive process.

Applicants must indicate in the abstract of their proposal the category under which they are applying. Applicants are encouraged to read the entire SGA since applicants under both Categories 1 and 2 are required to work collaboratively on some part of the project. The Category 1 grant recipient is required to create an HVCP and give Category 2 grant recipients training on how to use the service, and Category 2 grant recipients are required to train their staff, as well as staff from local One-Stop Career Centers, on the HVCP as part of year 2 grant activities.

Under Category 1, ETA intends to award one grant for up to $6.6 million to develop and operate an HVCP. Under Category 2, ETA intends to award two to four grants totaling approximately $6.6 million to national community- and faith-based organizations and non-profit One-Stop Career Center operators. The Category 2 grantees will increase access to virtual career exploration services by (a) building their capacity to deliver these services to their customers in local communities and (b) increasing the ability of their customers to make use of and benefit from online resources.

Eligible applicants for Category 1 include private nonprofit organizations with a nationally-focused mission. Eligible applicants under Category 2 of this grant Solicitation include private national nonprofit organizations that deliver services through networks of local affiliates, coalition members, or other established partners, including non-profit operators of One-Stop Career Centers. See section III.A for additional information related to eligible applicants.

This Solicitation provides background information and describes the application submission requirements, outlines the process that eligible entities must use to apply for funds covered by this Solicitation, and details how grantees will be selected. Applicants should read the entire SGA and note the specific sections that contain required information, such as in section II.A, section III.A, and section IV.B, where failure to comply will be considered non-responsive and those applicants will not be considered for funding.

The Department of Labor is committed to providing the public with an open and transparent grant selection process and providing useful information to assist prospective applicants with developing quality proposals. One way to achieve these goals is through public access to selected and non-selected grant applications. Applicants are advised that the information they submit in response to this Solicitation may be posted on a publicly accessible Web site or may otherwise be made available to the public.

DATES: *Key Dates:* The closing date for receipt of applications under this announcement is May 7, 2010. Applications must be received no later than 4 p.m. Eastern Time. A pre-recorded Webinar will be online (*http://www.workforce3one.org*) and accessible for viewing on April 14, 2010, and will be available for viewing anytime after that date. While a review of this Webinar is encouraged it is not mandatory that applicants view this recording.

ADDRESSES: Mailed applications must be addressed to the U.S. Department of Labor, Employment and Training Administration, Division of Federal Assistance, Attention: James Stockton, Grant Officer, Reference SGA/DFA PY 09–09, 200 Constitution Avenue, NW., Room N4716, Washington, DC 20210. For complete "Application and Submission Information," please refer to section IV.

SUPPLEMENTARY INFORMATION:

I. Funding Opportunity Description

A. The American Reinvestment and Recovery Act (Recovery Act): Competitive Grants for Worker Training and Placement in High Growth and Emerging Industry Sectors

On February 17, 2009, President Barack Obama signed into law the Recovery Act, through which Congress intended to preserve and create jobs, promote the nation's economic recovery, and assist those most impacted by the recession. Among other funding directed toward the Department, the Recovery Act provides $750 million for a program of competitive grants for worker training and placement in high growth and emerging industries. Of the $750 million allotted for competitive grants, the Recovery Act designates $500 million for projects that prepare workers for careers in the energy efficiency and renewable energy industries described in Section 171(e)(1)(B) of the Workforce Investment Act (WIA). The Recovery Act further provided that in awarding grants for the remaining $250 million, projects that prepare workers for careers in the healthcare sector would receive priority. To date, ETA has awarded $720 million in competitive grants to 244 grantees and will use a portion of the funds to provide technical assistance to Recovery Act grantees.

With this SGA, DOL is devoting $13.2 million to prepare workers for careers in the healthcare sector by promoting the creation of an online platform that will use standardized data, application programming interfaces (APIs), and hosting infrastructure to support new applications, which will help individuals learn about and prepare for careers in the healthcare industry. The SGA will also build the capacity of community- and faith-based organizations to provide diverse customers with access to virtual resources and to assist their customers in using virtual and other resources to pursue career pathways, including those in the healthcare sector. These efforts will help participants prepare for and find employment, while leveraging other Recovery Act investments intended to create jobs and promote economic growth.

B. The Need for Virtual Career Services in the Healthcare Industry

In December 2009, ETA held a series of conference calls and a web-based meeting with healthcare subject matter experts from federal, state and local government, education institutions, and other public and private organizations to explore the need for virtual

healthcare career resources. Among the stakeholders, there was general consensus that there are gaps in the information that individuals have about healthcare career opportunities and occupations; some of these gaps could be filled via virtual services. In addition, there are many healthcare career resources online that may not be having maximum impact because they are difficult to find, especially for underserved populations, and they are not interconnected. There is a need to better connect and inform the public or "publicize" the information, practices and resources that are currently available and being used, as well as a need to build certain additional components that are not presently available. Resources identified from these consultations, from the Jobs for America's Job Seekers Challenge, and selected Federal resources have been compiled and can be accessed on the Workforce3One site at: *http://www.workforce3one.org/view/2001008333909172195/info*. The objectives for the HVCP were developed based on the input received as a result of these conference calls.

C. Healthcare Sector and Occupations

As many industries experience lay-offs and job losses, the healthcare industry remains a critical driver in regional economies across the nation. In December 2009, the U.S. Bureau of Labor Statistics (BLS) reported that the healthcare sector continued to grow. Hospitals, long-term care facilities, and other ambulatory care settings added 21,500 new jobs in December 2009.

Healthcare providers employ large numbers of workers and contribute significantly to the strength of regional economies. BLS projects that healthcare employers will generate about 4 million new wage and salary jobs between 2008 and 2018, with the health services and social assistance sector projected to grow by 25.3 percent, adding more jobs (nearly 4.0 million) than any other industry sector. Employment growth in the healthcare sector will be driven by significant increases in demand for healthcare and assistance because of an aging population and longer life expectancies. In addition, projected retirements for current healthcare workers will necessitate a pipeline of skilled individuals ready to enter healthcare occupations. The growing diversity of our nation's population will also require additional skills and competencies, such as linguistic and cultural competencies, that impact the quality of care.

The need for qualified workers in this diverse sector impacts the quality and availability of medical care, and the economic stability and growth potential of local communities in rural, urban, and suburban areas. Moreover, the growing complexity of healthcare delivery, including changing technologies and introduction of advanced medical devices, will require both incumbent workers and new entrants to continuously upgrade their skills. Although job opportunities exist for workers without extensive specialized training, most healthcare occupations require training leading to a vocational license, certificate, or degree.

ETA is particularly interested in supporting the development of a platform that will emphasize opportunities within health technology and healthcare support occupations such as: medical and clinical laboratory technologists, medical and clinical laboratory technicians, dental hygienists, cardiovascular technologists and technicians, diagnostic medical sonographers, nuclear medicine technologists, radiologic technologists and technicians, emergency medical technicians and paramedics, dietetic technicians, pharmacy technicians, psychiatric technicians, respiratory therapy technicians, surgical technologists, licensed practical and licensed vocational nurses, community health workers and patient navigators, medical records and health information technicians, dispensing opticians, orthotists and prosthetists, occupational health and safety specialists, occupational health and safety technicians, home health aides, nursing aides/orderlies/attendants, psychiatric aides, occupational therapist assistants and aides, physical therapist assistants and aides, dental assistants, medical assistants, medical equipment preparers, medical transcriptionists, and pharmacy aides.

D. Grant Objectives

ETA is interested in projects that expand access to healthcare career information, especially to diverse populations, and reduce barriers to accessing those resources. The development of the HVCP by the grantee funded under Category 1 of this SGA will be complemented by activities of grantees funded under Category 2. Category 2 grantees will provide technical assistance to help connect their customers to virtual workforce development services. By expanding access to online career services, including healthcare careers, ETA seeks to achieve the following objectives:

- Assist current and future workers to consider healthcare career options by providing information on the required education and preparation, the nature of the day-to-day work, the work environment, experience, tasks performed on the job, and expectations for the continuing education required to advance along a career pathway or ladder;
- Assist individuals, through appropriate assessment, who have an interest in and aptitude for healthcare careers, with career decision-making, in order to help them select among the range of healthcare career options;
- Assist individuals in developing a plan of action to achieve their healthcare career goals through information on education and training requirements, licensing requirements, available training options, and links to local One-Stop Career Centers, community colleges, and other appropriate organizations;
- Provide selected online training to assist individuals in obtaining pre-healthcare competencies so that they will be ready to enroll in training toward their career goal—this could include courses to increase literacy and mathematics proficiency as well as prerequisite courses in science fundamentals;
- Support individuals in achieving their career goals through media and social networking, such as virtual tutoring, virtual mentoring, virtual study groups or forums, virtual job clubs, and similar virtual services;
- Enable third-party software developers to build, "beta"-test, and launch applications that utilize standardized information resources and associated APIs;
- Provide hosting infrastructure for healthcare career information, training resources, and other data, along with standardized APIs, to support both in-house and third-party applications;
- Develop, launch, iterate, and provide in-house applications that provide the information and services outlined above;
- Enable a new marketplace of applications that can use the HVCP to support existing and new business models around healthcare career information;
- Promote the HVCP services, and help disadvantaged populations use virtual services by providing train-the-trainer training and support to (1) Community-and Faith-Based Organizations and One-Stop Career Center Staff, and (2) Community- and Faith-Based Organizations and One-Stop Career Center customers to help them make use of the services and information in the HVCP, through a variety of means such as tutorials,

training, and videos. As appropriate, this training may be made available to other partners such as libraries. This outreach and technical assistance can include both virtual and in-person training; and

- Provide linkages to national, state, regional, and local healthcare career resources, services, and applications.
- Provide linkages to training and employment including Registered Apprenticeship and joint labor-management programs.

E. Key Project Elements for Category 1—Healthcare Virtual Career Platform (HVCP)

The following are key activities and deliverables required for the HVCP grant Solicitation:

i. *Develop Asset Map.* Identify what virtual tools and services are available for persons interested in a healthcare career and which ones would be valuable to include in on the HVCP;

ii. *Develop a Gap Analysis.* Analyze the resources identified in the asset map and identify gaps in information and tools that need to be developed as in-house applications running on the HVCP to adequately promote healthcare career exploration and career planning;

iii. *Build and Operate Platform.* Design, build, and operate an open platform for healthcare career information resources and services, together with APIs and hosting infrastructure for healthcare career information and in-house and third-party applications;

iv. *Develop an HVCP as an open source platform.* Both the system and the uncompiled source code should be open source or located in the public domain. The structure of the site should look beyond the current operating environment and integrate the long-term Open Government objectives of universal access and cross-platform integration. See the Open Government Directive issued by the Office of Management and Budget (OMB) in Memorandum M–10–06 dated December 8, 2009 located at: *http://www.whitehouse.gov/open/documents/open-government-directive.*

Please note that all tools and components developed for the HVCP must be discrete and separate, capable of being decoupled from the platform and added to other systems.

v. *Develop Assessment Tool.* The HVCP must include an assessment tool as one of the applications developed for the platform. Through its review, ETA found generic assessments for occupation sectors but was unable to identify assessments that match users to specific healthcare occupations. Therefore, we are specifying that one of the tasks will be to provide a healthcare occupation-specific assessment. To address this need, applicants in Category 1 will provide an interest, aptitude, and readiness assessment tool for specific healthcare careers. Furthermore, the assessment and results should be detailed enough to be able to direct an individual to specific occupations within the overall healthcare career field at the level of detail as described within the Department of Labor's Occupational Information Network (O*NET) system or additional detail provided by the Health Resources and Services Administration within the Department of Health and Human Services, rather than just providing a general vocational interest indicating that the healthcare industry as a whole is a possible career option. The assessment tool should also assess current educational and work readiness and potential transferable skills so as to help diverse individuals develop a career pathway plan that includes needed education as well as jobs or occupations along a career ladder to higher, family-supporting wages.

vi. *Incorporate Online Training Component.* The HVCP must include an online training application that would consist of noncredit prerequisite courses for entry-level healthcare careers. Many training courses already exist; these as well as any gaps should be identified in the asset-mapping portion of the project. The training would assist individuals in preparing for postsecondary level education and training and in obtaining pre-healthcare career competencies so that they will be ready to enroll in training for their career goal. Examples of the training courses to be offered could include courses to increase literacy, mathematics and science fundamental prerequisites, such as introductions to basic biology, chemistry, and anatomy.

vii. *Develop and deliver outreach materials and staff training.* Outreach materials must be developed describing the HVCP and its components. Staff training on the use of the HCVP and the resources available on the platform must be developed to be delivered to One-Stop Career Centers and Community- and Faith-Based Organizations (including Category 2 grantees) regarding the use of the HVCP and the resources available on the site.

viii. The HVCP will be developed during year 1 and will be maintained and updated throughout year 2.

F. Key Project Elements for Category 2—Enhancing the Ability of Community- and Faith-Based Organizations To Deliver Virtual Career Exploration Services, Including Healthcare Careers

Grantees will use funds to build their capacity to both offer virtual services to diverse clients and customers, and to assist their customers in making good use of such resources, through any of the following:

i. *Capacity-Building Activities (not to exceed 30 percent of proposed project budget).* Grantees can augment their information technology capacity through any of the following:

- Providing additional computer workstations for customers in Year 1;
- Increasing broadband capacity or Internet access (e.g., more lines, faster connections) in Year 1;
- Obtaining software, including computer literacy assessments and training modules to help customers learn about and become comfortable using online services in Year 1; and

ii. *Customer Service Activities*

- Providing training for their own staff and customers, and staff from local One-Stop Career Centers, on effective use of online career and workforce development services to help jobseekers prepare for and find employment, in Year 1 and Year 2;
- Providing computer literacy and career development training for their customers; specifically assisting customers to use virtual resources and Internet based sites for planning career pathways, including identifying career goals, planning required education and training, and applying for jobs in their chosen career field, in Year 1 and Year 2; and
- Implementing training for staff and customers using the HVCP and its materials (developed by the Category 1 grantee), in Year 2

II. Award Information

A. Award Amount

Under this SGA, ETA intends to award approximately $13.2 million in grant funds authorized by the Recovery Act for two categories of projects that use virtual service-delivery models to promote career opportunities, including those in the healthcare sector. The eligible applicant criteria for each category of projects are defined in section III.A. Within the funding ranges specified below, applicants are encouraged to submit proposals for quality projects at a funding level that is appropriate to the project.

1. Category 1—Healthcare Virtual Career Platform (HVCP)

ETA anticipates that it will award one grant for up to $6.6 million to develop and operate an HVCP. ETA reserves the right to change this amount depending on the quantity and quality of applications submitted under this SGA. However, ETA will consider requests for greater than $6.6 million to be nonresponsive, and such applicants will not be considered for funding.

2. Category 2—Enhancing the Ability of Community- and Faith-Based Organizations to Deliver Virtual Career Exploration Services, Including Healthcare Careers

ETA intends to award two to four grants in amounts ranging from $1 to $3 million, for a total of up to $6.6 million to build the capacity of national community- and faith-based organizations to provide virtual services to their clients and customers in support of career exploration, including healthcare careers. ETA reserves the right to change this amount depending on the quantity and quality of applications submitted under this SGA. ETA does not expect to fund any project for less than $1 million, but this does not preclude funding grants at a lower amount based on the type and number of quality submissions. However, ETA will consider requests for greater than $3 million nonresponsive, and such applicants will not be considered for funding.

B. Period of Performance

The period of grant performance for all awards will be up to 24 months from the date of execution of the grant documents. This performance period includes all necessary grant activities, including implementation and start-up activities. Applicants must submit a timeline of activities planned for the entire 24-month period.

ETA expects to make grant awards under this SGA by June 30, 2010, and also expects that the grant start date will be July 1, 2010. Applicants should plan for start-up activities under the grant to begin immediately after award, and we strongly encourage grantees to develop their project work plans and timelines accordingly. In addition, the Department intends for the HVCP (Category 1) grantee to complete development of an initial operating version of the HVCP within the first year of the grant.

While grant awards will be funded for a period of performance of two years, ETA may make available up to three additional years of funding, depending upon the availability of funds and the demonstrated performance of grant activities. However, applications must include a timeline of activities that reflects full expenditure of grant funds and completion of grant activities during the 24-month period of performance, while ensuring full transparency and accountability for all expenditures.

III. Eligibility Information

A. Eligible Applicants and Strategic Partnerships

Under this Solicitation, applicants may apply under one of two categories:

Category 1—Healthcare Virtual Career Platform (HVCP); or

Category 2—Enhancing the Ability of Community- and Faith-Based Organizations to Deliver Virtual Career Exploration Services, Including Healthcare Careers.

Applicants may only submit a grant application under one category and only one application per applicant will be accepted. Applicants must indicate in the abstract of their proposal the category under which they are applying. Applications that do not adhere to the above instructions will be considered to be nonresponsive and not reviewed or funded. In particular, if an applicant submits more than one application, none of the applications will be considered. (*Please see* section IV.F for instructions for withdrawing an application before submitting a new application.) These two applicant categories will compete separately for funding under this SGA, and each Category will be paneled and reviewed separately.

This section provides separate eligibility and partnership information for each of the two categories.

1. Category 1—Healthcare Virtual Career Platform

i. Eligible applicants for Category 1

Eligible applicants for Category 1 grants are private nonprofit organizations with a nationally-focused mission to promote education, workforce development, career pathways, employment, or retention (such as national healthcare occupational associations, national health associations with experience in working with diverse populations, national educational associations with experience in healthcare workforce development, national workforce development associations, or nationwide healthcare systems that focus on both healthcare service delivery and education). An organization with a mission that focuses on a specific State, region, or local area (such as a State Workforce Agency, local workforce investment board, or community college) is not eligible to apply as the lead applicant, but may be included as part of the strategic partnership described in section III.A.ii.

ii. Strategic Partnerships for Category 1

To be eligible to apply for funding under Category 1, applicants must demonstrate that the proposed project will be implemented by a robust strategic partnership that maximizes available resources, either virtual resources or additional financial resources, to support the project and represents the level of combined organizational expertise, in the following areas, which is necessary to effectively execute the project:

- *Workforce Development and Training.* The applicant and/or its strategic partners must have significant knowledge and experience in designing and delivering career exploration services and training, particularly in online and virtual environments. To ensure that this knowledge and experience is represented in the project, the applicant may partner with educational institutions (such as community or technical college systems) and the public workforce investment system (such as State Workforce Agencies or local workforce investment boards and their One-Stop systems).
- *Healthcare Occupations.* The applicant and/or its strategic partners must have significant knowledge of the healthcare occupations described in section I.C of this SGA, including an understanding of the knowledge, skills, and abilities needed for these occupations, as well as associated training, education, and licensure or certification programs. To ensure that this knowledge is represented in the project, the applicant may partner with healthcare occupational associations, healthcare employers and industry-related organizations, and/or educational institutions with healthcare programs successful in placing individuals in employment in the industry.
- *Development and Deployment of Virtual Service Delivery Platforms.* The applicant and/or its strategic partners must have expertise and experience in programming open-source platforms, and developing and implementing online virtual service-delivery models, particularly online virtual training and education services. To ensure that the project partnership is well-equipped to design a site to serve the public, the applicant may partner with (or procure

the services of) information technology providers or other organizations, including for-profit organizations, with significant relevant expertise and experience.

• *Public Outreach Expertise.* The applicant and/or its strategic partners must have significant knowledge and experience in conducting public outreach and awareness campaigns that could be employed in promoting a new site to its intended users and have experience in working with diverse populations. These outreach capabilities could include use of traditional media avenues, such as press releases or interviews; public service announcements; networking; use of social media; as well as search engine optimization strategies to direct traffic to the site.

2. Category 2—Enhancing the Ability of Community- and Faith-Based Organizations To Deliver Virtual Career Exploration Services, Including Healthcare Careers

i. Eligible Applicants for Category 2

Eligible applicants for Category 2 grants are private national or multi-state nonprofit community- or faith-based organizations that deliver services through networks of local affiliates, coalition members, or other established partners, including labor management organizations and non-profit organizations that operate One-Stop Career Centers in more than one state. It is ETA's intent that investments in Category 2 achieve geographic balance across the country and increase capacity in both rural and urban settings in at least six different sites. Therefore, applicants under Category 2 must demonstrate that they have the capacity to work in a variety of communities in more than one state.

ii. Strategic Partnerships for Category 2

To be eligible for funding under Category 2 of this SGA, applicants must demonstrate that the proposed project, in each community served, will be implemented by a robust strategic partnership that maximizes available resources to support the project, provides access to diverse job seekers, and provides access to employment opportunities within the healthcare sector. At a minimum, this strategic partnership must include at least one representative, for each community served through the project, from each of the following categories:

• The public workforce investment system, such as State or local Workforce Investment Boards and their One-Stop systems, to further strengthen the existing collaboration betweens One-Stops and community- and faith-based organizations to provide career services to individuals whose role may include, but is not limited to, identifying, assessing, and referring candidates for training, and connecting and placing participants with employers that have existing job openings; and

• Public and private employers or industry-related organizations who employ or represent the healthcare occupations described in section I. C of this SGA.

B. Cost Sharing

Cost sharing or matching funds are not required as a condition for application, but applicants may use leveraged resources.

C. Other Grant Specifications

1. Required Collaboration Between Category 1 and Category 2 Grantees

Following the selection of grant recipients under this Announcement, the grantee under Category 1 must enter into a separate Memorandum of Understanding (MOU) with each grant awarded under Category 2. The MOUs will detail the HVCP services and training that the Category 1 grantee will provide to Category 2 grantees, and will describe how Category 2 grantees will utilize the HVCP platform and associated tools developed by the Category 1 grantee.

2. Other Grant Specifications for Category 1

i. *Sustainability:* The grantee is required to explore options for sustaining the HVCP in the event that additional Federal funds are not available at the close of the grant period. Such options could include potential sponsors, foundations, or associations or organizations that would be interested in maintaining the benefits obtained through the HVCP in building the healthcare workforce pipeline. The applicant must provide a plan to develop a sustainability options paper as part of the grant deliverables.

3. Other Grant Specifications for Category 2

i. Allowable Activities for Category 2

• The purchase of automated data processing (ADP) equipment, considered essential for the implementation of the project, will be allowed with the prior approval of the Agency. However, no more than 30 percent of the grant funds can be used for such purchases. Also, in accordance with 29CFR 95.34, equipment may be retained for use in the grant project for which it was acquired, as long as needed after grant termination, unless directed otherwise by the agency.

• Staff training, including training programs and/or personnel assessments or tests leading to a credential attesting to competency in providing career development services to individual customers.

IV. Application and Submission Information

A. How To Obtain an Application Package

This SGA contains all of the information and links to forms needed to apply for grant funding.

B. Content and Form of Application Submission for Category 1—Healthcare Virtual Career Platform and Category 2—Enhancing the Ability of Community- and Faith-Based Organizations To Deliver Virtual Career Exploration Services, Including Healthcare Careers

Proposals submitted in response this SGA will consist of three separate and distinct parts: (I) A cost proposal; (II) a technical proposal; and (III) attachments to the technical proposal. Applications must include the following or will be considered non-responsive and will not be considered: (1) The Standard Form (SF)–424, "Application for Federal Assistance;" (2) the SF–424A Budget Information Form; (3) Data Universal Numbering System (D–U–N–S®) Number; (4) Budget Narrative; (5) A request grant funds within the appropriate funding range noted in section II.A; and (6) Abstract. Applications that fail to adhere to the instructions in this section will be considered non-responsive and will not be considered. The amount listed in Part I: Cost Proposal and the amount listed on the SF–424 "Application for Federal Assistance should be the same. Please note, the funding amount included on the SF–424 will be considered the official funding amount requested.

Part I. The Cost Proposal. The Cost Proposal must include the following items:

• SF–424, "Application for Federal Assistance" (available at *http://www07.grants.gov/agencies/forms_repository_information.jsp* and *http://www.doleta.gov/grants/find_grants.cfm).* The SF–424 must clearly identify the applicant and must be signed by an individual with authority to enter into a grant agreement. Upon confirmation of an award, the individual signing the SF–424 on behalf of the applicant shall be considered the authorized representative of the

applicant. Applicants must supply their D–U–N–S® Number on the SF–424. If submitting a hard copy application, the SF–424 must be signed by the authorized representative. All applicants for Federal grant and funding opportunities are required to have a D–U–N–S® Number. *See* Office of Management and Budget (OMB) Notice of Final Policy Issuance, 68 FR 38402, June 27, 2003. The D–U–N–S® Number is a non-indicative, nine-digit number assigned to each business location in the Dun & Bradstreet (D&B) database having a unique, separate, and distinct operation, and is maintained solely by D&B. The D&B D–U–N–S® Number is used by industries and organizations around the world as a global standard for business identification and tracking. If you do not have a D–U–N–S® Number, you can get one for free through the D&B Web site: *http://smallbusiness.dnb.com/webapp/wcs/stores/servlet/Glossary?fLink=glossary&footerflag=y&storeId=10001&indicator=7.*

- The SF–424A Budget Information Form (available at *http://www07.grants.gov/agencies/forms_repository_information.jsp* and *http://www.doleta.gov/grants/find_grants.cfm).* In preparing the Budget Information Form, the applicant must provide a concise narrative explanation to support the budget request, explained in detail below.
- *Budget Narrative:* The budget narrative must provide a description of costs associated with each line item on the SF–424A. It should also include a description of leveraged resources provided to support grant activities. In addition, the applicant should address precisely how the administrative costs support the project goals. The entire Federal grant amount requested (not just one year) should be included on both the SF–424 and SF–424A. No leveraged resources should be shown on the SF–424 and SF–424A.

Applications that fail to provide an SF–424, SF–424A, a D–U–N–S® Number, and a budget narrative will be considered non-responsive and not reviewed.

- Applicants are also encouraged, but not required, to submit OMB Survey N. 1890–0014: Survey on Ensuring Equal Opportunity for Applicants, which can be found under the Grants.gov, Tips and Resources From Grantors, Department of Labor section at *http://www07.grants.gov/applicants/tips_resources_from_grantors.jsp#13* (also referred to as Faith-Based EEO Survey PDF Form).

Part II. The Technical Proposal. The Technical Proposal must demonstrate the applicant's capability to implement the grant project in accordance with the provisions of this Solicitation. The guidelines for the content of the Technical Proposal are provided in section V of this SGA. The Technical Proposal for Category 1: Healthcare Virtual Career Platform is limited to 25 double-spaced single-sided 8.5 x 11 inch pages with 12-point text font and 1-inch margins. The Technical Proposal for Category 2: Category 2—Enhancing the Ability of Community- and Faith-Based Organizations to Deliver Virtual Career Exploration Services, Including Healthcare Careers is limited to 20 double-spaced single-sided 8.5 x 11 inch pages with 12-point text font and 1-inch margins. Any materials beyond the specified page limit will not be read. Applicants should number the Technical Proposal beginning with page number 1. Applications that do not include Part II, the Technical Proposal, will be considered non-responsive.

Part III. Attachments to the Technical Proposal. In addition to the Technical Proposal, applicants must submit letters of commitment from all required partners or one letter of commitment that is co-signed by all partners that describes the roles and responsibilities of each partner. Electronic signatures are permissible in the letter(s) of commitment.

Applicants should not send letters of commitment separately to ETA, because letters received separately will be tracked through a different system and will not be attached to the application for review. ETA does not permit general letters of support submitted by organizations or individuals that are not partners in the proposed project and that do not directly identify the specific commitment or roles of the project partners. Support letters of this nature will not be included in the evaluation review process.

The applicant also must provide an Abstract, not to exceed two double-spaced single-sided pages and must include the following sections: (1) Summary of the proposed project, including applicant name; (2) applicant category as referenced in section III.A; (3) project title; (4) key partners; (5) projected outcomes; and (6) funding level requested.

Attachments to the technical proposal do not count against the page limit for the Technical Proposal, but may not exceed 10 pages for Category 1 and Category 2 applicants. Any additional materials beyond the 10-page limit for attachments will not be read. Applications that do not include the abstract will be considered non-responsive and will not be considered.

C. Submission Process, Date, Times, and Addresses

Applications may be submitted electronically on Grants.gov or in hard copy by mail or hand delivery. Applicants submitting proposals in hard copy must submit an original signed application (including the SF–424) and one (1) "copy-ready" version free of bindings, staples or protruding tabs to ease in the reproduction of the proposal by DOL. Applicants submitting proposals in hard copy are also required to provide an identical electronic copy of the proposal on compact disc (CD). If discrepancies between the hard copy submission and CD copy are identified, the application on the CD will be considered the official applicant submission for evaluation purposes. Failure to provide identical applications in hardcopy and CD format may have an impact on the overall evaluation.

The closing date for receipt of applications under both Category 1 and Category 2 of this announcement is May 7, 2010. Applications must be received at the address below no later than 4 p.m. Eastern Time. Applications sent by e-mail, telegram, or facsimile (FAX) will not be accepted. If an application is submitted by both hard-copy and through *http://www.grants.gov* a letter must accompany the hard-copy application stating why two applications were submitted and the differences between the two submissions. If no letter accompanies the hard-copy, we will review the copy submitted through *http://www.grants.gov.* Applications that do not meet the conditions set forth in this notice will be considered non-responsive. No exceptions to the mailing and delivery requirements set forth in this notice will be granted. Further, documents submitted separately from the application, before or after the deadline, will not be accepted as part of the application.

Mailed applications must be addressed to the U.S. Department of Labor, Employment and Training Administration, Division of Federal Assistance, Attention: James Stockton, Grant Officer, Reference SGA/DFA, PY 09–09, 200 Constitution Avenue, NW., Room N4716, Washington, DC 20210. Applicants are advised that mail delivery in the Washington area may be delayed due to mail decontamination procedures. Hand-delivered proposals will be received at the above address. All overnight mail will be considered to be hand-delivered and must be received at the designated place by the specified closing date and time.

Applications that are submitted through Grants.gov must be successfully submitted at *http://www.grants.gov* no later than 4 p.m. Eastern Time on May 7, 2010, and then subsequently validated by Grants.gov. The submission and validation process is described in more detail below. The process can be complicated and time-consuming. Applicants are strongly advised to initiate the process as soon as possible and to plan for time to resolve technical problems if necessary.

The Department strongly recommends that before the applicant begins to write the proposal, applicants should immediately initiate and complete the "Get Registered" registration steps at *http://www.grants.gov/applicants/get_registered.jsp.* Applicants should read through the registration process carefully before registering. These steps may take as much as four weeks to complete, and this time should be factored into plans for electronic submission in order to avoid unexpected delays that could result in the rejection of an application. The site also contains registration checklists to help you walk through the process. The Department strongly recommends that applicants download the "Organization Registration Checklist" at *http://www.grants.gov/assets/Organization_Steps_Complete_Registration.pdf* and prepare the information requested before beginning the registration process. Reviewing and assembling required information before beginning the registration process will alleviate last minute searches for required information and save time.

To register with Grants.gov, applicants applying electronically must have a D–U–N–S® Number and must register with the Federal Central Contractor Registry (CCR). Step-by-step instructions for registering with CCR can be found at *http://www.grants.gov/applicants/org_step2.jsp.* All applicants must register with CCR in order to apply online. Failure to register with the CCR will result in your application being rejected by Grants.gov during the submission process.

The next step in the registration process is creating a username and password with Grants.gov to become an Authorized Organizational Representative (AOR). AORs will need to know the D–U–N–S® Number of the organization for which they will be submitting applications to complete this process. To read more detailed instructions for creating a profile on Grants.gov visit: *http://www.grants.gov/applicants/org_step3.jsp.*

After creating a profile on Grants.gov, the E–Biz point of Contact (E–Biz POC)—a representative from your organization who is the contact listed for CCR—will receive an e-mail to grant the AOR permission to submit applications on behalf of their organization. The E–Biz POC will then log in to Grants.gov and approve an applicant as the AOR, thereby giving him or her permission to submit applications. To learn more about AOR Authorization visit: *http://www.grants.gov/applicants/org_step5.jsp,* or to track AOR status visit: *http://www.grants.gov/applicants/org_step6.jsp.*

An application submitted through Grants.gov constitutes a submission as an electronically signed application. The registration and account creation with Grants.gov, with E–Biz POC approval, establishes an AOR. When you submit the application through Grants.gov, the name of your AOR on file will be inserted into the signature line of the application. Applicants must register the individual who is able to make legally binding commitments for the applicant organization as the AOR; this step is often missed and it is crucial for valid submissions.

When a registered applicant submits an application with Grants.gov, an electronic time stamp is generated within the system when the application is successfully received by Grants.gov. Within two business days of application submission, Grants.gov will send the applicant two e-mail messages to provide the status of application progress through the system. The first e-mail, almost immediate, will contain a tracking number and will confirm receipt of the application by Grants.gov. The second e-mail will indicate the application has either been successfully validated or has been rejected due to errors. Only applications that have been successfully submitted by the deadline and subsequently successfully validated will be considered. It is the sole responsibility of the applicant to ensure a timely submission. While it is not required that an application be successfully validated before the deadline for submission, it is prudent to reserve time before the deadline in case it is necessary to resubmit an application that has not been successfully validated. Therefore, sufficient time should be allotted for submission (two business days) and, if applicable, subsequent time to address errors and receive validation upon resubmission (an additional two business days for each ensuing submission). It is important to note that if sufficient time is not allotted and a rejection notice is received after the due date and time, the application will not be considered.

To ensure consideration, the components of the application must be saved as .doc, .xls or .pdf files. If submitted in any other format, the applicant bears the risk that compatibility or other issues will prevent our ability to consider the application. ETA will attempt to open the document but will not take any additional measures in the event of problems with opening. In such cases, the non-conforming application will not be considered for funding.

We strongly advise applicants to use the plethora of tools and documents, including FAQs, which are available on the "Applicant Resources" page at *http://www.grants.gov/applicants/resources.jsp.*

ETA encourages new prospective applicants to view the online tutorial, "Grant Applications 101: A Plain English Guide to ETA Competitive Grants," available through Workforce3One at: *http://www.workforce3one.org/page/grants_toolkit.*

To receive updated information about critical issues, new tips for users and other time sensitive updates as information is available, applicants may subscribe to "Grants.gov Updates" at *http://www.grants.gov/applicants/email_subscription_signup.jsp.*

If applicants encounter a problem with Grants.gov and do not find an answer in any of the other resources, call 1–800–518–4726 to speak to a Customer Support Representative or e-mail "*support@grants.gov*". The Contact Center is open 24 hours a day, seven days a week. It is closed on federal holidays.

Late Applications: For applications submitted on Grants.gov, only applications that have been successfully submitted no later than 4:00 p.m. Eastern Time on the closing date and then successfully validated will be considered. Applicants take a significant risk by waiting to the last day to submit by Grants.gov.

Any application received after the exact date and time specified for receipt at the office designated in this notice will not be considered, unless it is received before awards are made, it was properly addressed, and it was: (a) Sent by U.S. Postal Service mail, postmarked not later than the fifth calendar day before the date specified for receipt of applications (*e.g.,* an application required to be received by the 20th of the month must be postmarked by the 15th of that month); or (b) sent by professional overnight delivery service to the addressee not later than one

working day before the date specified for receipt of applications. "Postmarked" means a printed, stamped or otherwise placed impression (exclusive of a postage meter machine impression) that is readily identifiable, without further action, as having been supplied or affixed on the date of mailing by an employee of the U.S. Postal Service. Therefore, applicants should request the postal clerk to place a legible hand cancellation "bull's eye" postmark on both the receipt and the package. Failure to adhere to these instructions will be a basis for a determination that the application was not filed timely and will not be considered. Evidence of timely submission by a professional overnight delivery service must be demonstrated by equally reliable evidence created by the delivery service provider indicating the time and place of receipt.

D. Intergovernmental Review

This funding opportunity is not subject to Executive Order 12372, "Intergovernmental Review of Federal Programs."

E. Funding Restrictions

Determinations of allowable costs will be made in accordance with the applicable Federal cost principles. Disallowed costs are those charges to a grant that the grantor agency or its representative determines not to be allowed in accordance with the applicable Federal cost principles or other conditions contained in the grant.

Successful and unsuccessful applicants will not be entitled to reimbursement of pre-award costs.

1. Indirect Costs

As specified in OMB Circular Cost Principles, indirect costs are those that have been incurred for common or joint objectives and cannot be readily identified with a particular final cost objective. In order to use grant funds for indirect costs incurred, the applicant must obtain an Indirect Cost Rate Agreement with its cognizant Federal agency either before or shortly after grant award.

An indirect cost rate (ICR) is required when an organization operates under more than one grant or other activity whether Federally-assisted or not. Organizations must use the ICR supplied by the cognizant agency. If an organization requires a new ICR or has a pending ICR, the Grant Officer will award a temporary billing rate for 90 days until a provisional rate can be issued. This rate is based on the fact that an organization has not established an ICR agreement. Within this 90 day period, the organization must submit an acceptable indirect cost proposal to their cognizant Federal agency to obtain a provisional ICR.

2. Administrative Costs

Under this SGA, an entity that receives a grant to carry out a project or program may not use more than 10 percent of the amount of the grant to pay administrative costs associated with the program or project. Administrative costs could be direct or indirect costs, and are defined at 20 CFR 667.220. Administrative costs do not need to be identified separately from program costs on the SF–424A Budget Information Form. However, they must be discussed in the budget narrative and tracked through the grantee's accounting system. To claim any administrative costs that are also indirect costs, the applicant must obtain an Indirect Cost Rate Agreement from its cognizant Federal agency.

3. Salary and Bonus Limitations

Under Public Law 109–234, none of the funds appropriated in Public Law 109–149 or prior Acts under the heading "Employment and Training Administration" that are available for expenditure on or after June 15, 2006, may be used by a recipient or sub-recipient of such funds to pay the salary and bonuses of an individual, either as direct costs or indirect costs, at a rate in excess of Executive Level II. Public Laws 111–8 and 111–117 contain the same limitations with respect to funds appropriated under each of these Laws. These limitations also apply to grants funded under this SGA. The salary and bonus limitation does not apply to vendors providing goods and services as defined in OMB Circular A–133 (codified with 29 CFR Parts 96 and 99). See Training and Employment Guidance Letter number 5–06 for further clarification: *http://wdr.doleta.gov/directives/corr_doc.cfm?DOCN=2262.*

4. Use of Grant Funds for Participant Wages

Organizations that receive grants through this SGA may not use grant funds to pay for the wages of participants. Further, the provision of stipends to training enrollees for the purposes of wage replacement is not an allowable cost under this SGA.

5. Intellectual Property Rights

The Federal Government reserves a paid-up, nonexclusive and irrevocable license to reproduce, publish or otherwise use, and to authorize others to use for Federal purposes: (1) The copyright in all products developed under the grant, including a subgrant or contract under the grant or subgrant; and (2) any rights of copyright to which the grantee, subgrantee or a contractor purchases ownership under an award (including but not limited to curricula, training models, technical assistance products, and any related materials). Such uses include, but are not limited to, the right to modify and distribute such products worldwide by any means, electronically or otherwise. Federal funds may not be used to pay any royalty or licensing fee associated with such copyrighted material, although they may be used to pay costs for obtaining a copy which are limited to the developer/seller costs of copying and shipping. If revenues are generated through selling products developed with grant funds, including intellectual property, these revenues are program income. Program income is added to the grant and must be expended for allowable grant activities.

The source code, including all code incorporated to create the components and system that will comprise the HVCP developed under this grant will be considered open-source, subject to copyright by the grantee under the express provisions of an open-source software license. To this end, in lieu of the U.S. Department of Labor's (DOL) standard reservation of a license in copyrighted works developed under a grant per 29 CFR 95.36, the intellectual property rights of DOL, its grantees and subgrantees (including contractors of the grantee/subgrantee) in the HVCP will be governed by an open-source software license, namely, the GPLv3 license (attached, Appendix A), unless otherwise agreed upon in writing by authorized representatives of both DOL and the grantee.

Grantees must include the following language on all products developed in whole or in part with grant funds: "This workforce solution was funded by a grant awarded by the U.S. Department of Labor's Employment and Training Administration. The solution was created by the grantee and does not necessarily reflect the official position of the U.S. Department of Labor. The Department of Labor makes no guarantees, warranties, or assurances of any kind, express or implied, with respect to such information, including any information on linked sites and including, but not limited to, accuracy of the information or its completeness, timeliness, usefulness, adequacy, continued availability, or ownership." For assessments and tools developed by the grantee, the following must be added to the disclaimer statement: "This solution is copyrighted by the

institution that created it. Internal use by an organization and/or personal use by an individual for non-commercial purposes is permissible. All other uses require the prior authorization of the copyright owner." For the HVCP platform and other open-source products, the following must be added to the disclaimer statement "This solution is distributed as open-source software under a GPLv3 license, which is included on the start-up screen of the software or written in the code."

F. Other Submission Requirements

Withdrawal of Applications: Applications may be withdrawn by written notice to the Grant Officer at any time before an award is made.

V. Application Review Information

Evaluation Criteria

This section identifies and describes the criteria that will be used for each category to evaluate grant proposals. The evaluation criteria are described below in two categories:

Category 1—Healthcare Virtual Career Platform; or

Category 2—Enhancing the Ability of Community- and Faith-Based Organizations to Deliver Virtual Career Exploration Services, Including Healthcare Careers.

A. Evaluation Criteria: Category 1—Healthcare Virtual Career Platform (HVCP)

These criteria and point values are:

Criterion	Points
1. Strategy and Project Work Plan	40
2. Platform Design and Technical Specifications	15
3. Organizational Capacity and Technical Expertise	25
4. Deliverables and Outcomes	20
Total	100

1. Strategy and Project Work Plan (40 points)

The HVCP is intended to be a Web-based clearinghouse specifically designed to improve access to information and resources available for individuals, including individuals from underserved communities, interested in pursuing healthcare careers. This online tool will integrate both existing resources via links or Web services, along with certain newly developed components or tools, in a single, accessible user-friendly platform that presents users with a logical way to think about healthcare career exploration and decision-making, as well as planning their next steps in terms of education and other preparation, including planning their own career pathway and career ladder. The applicant must provide a complete and very clear explanation of its proposed strategy and its implementation plans to meet these objectives.

The applicant must describe the proposed web-based career exploration strategy in full; explain how the proposed components address healthcare workforce needs; and, demonstrate how the proposed project will effectively provide online content and services (1) to encourage diverse individuals to pursue healthcare careers and (2) to develop their career and education and training plans. In support of the proposal, applicants should describe any evidence-based research that they considered in designing the strategy. The applicant must present a comprehensive work plan for the project, following the format provided in this section. Points for this section will be based on the relevance, completeness, and quality of data and analysis which underlie the Strategy and Project Work Plan as follows:

i. Strategies for Developing HVCP (20 points)

Scoring under this section will be based on the extent to which the applicant fully and clearly describes its proposed strategies for performing the following tasks under the grant and indicates how they will be carried out through the activities in the work plan:

- *Develop Asset Map.* Identify what virtual tools and services are available for persons interested in a healthcare career and which ones would be valuable to include as part of the HVCP (year 1).
- *Develop a Gap Analysis.* Analyze the resources identified in the asset map (above) and identify gaps in information and tools that need to be developed as in-house applications running on the HVCP to adequately promote healthcare career exploration and career planning, especially for diverse communities (year 1).
- *Build and Operate Platform.* Design, build, and operate an open platform for healthcare career information resources and services, together with APIs and hosting infrastructure for healthcare career data and in-house and third-party applications;
- *Develop a design for the HVCP to deliver all the identified components (year 1).* Both the system and the uncompiled source code should be open source or located in the public domain.
- *Develop Assessment Tool.* The HVCP must include an assessment tool. The applicant should provide an interest, aptitude, and readiness assessment tool for specific healthcare careers, as one of the applications developed for the platform. The assessment and results should be detailed enough to be able to direct an individual to specific occupations within the overall healthcare career field, rather than just providing a general vocational interest indicating that the healthcare industry as a whole is a possible career option. The assessment tool should also assess current educational and work readiness and potential transferable skills to help an individual develop a career pathway plan that includes needed education as well as jobs or occupations along a career ladder to higher, family-supporting wages (year 1).
- *Incorporate Online Training Component.* The HVCP must include an online training component that would consist of noncredit prerequisite courses for entry-level healthcare careers. Such training courses already exist and would be identified in the asset-mapping portion of the project (year 1).

ii. Outreach, Training and Collaboration Strategy (5 points) Scoring under this section will be based on the extent to which the applicant fully and clearly describes its strategies for providing public outreach, awareness and training activities as described below:

- *Public Outreach and Awareness Activities.* The applicant must provide a comprehensive outreach and awareness strategy for the public workforce investment system and community- and faith-based organizations (including recipients of grant funds for Category 2 of this SGA) to inform and create awareness of the information and services offered by the HVCP. The applicant should take into account the needs and barriers facing diverse communities. The applicant should describe train-the-trainer activities, to be delivered either in-person or virtual. The applicant must clearly identify how the proposed strategy will enable the project to effectively recruit users to the site and empower them to use the services provided (year 2).
- *Training.* The applicant must develop and provide training on the tools and services available on the HVCP as well as a tutorial on the site itself, virtually and in-person for staff, including staff of One-Stop Career Centers, community- and faith-based organizations, and Category 2 grant recipients and for individuals (year 2).
- *Collaboration.* The applicant is expected to provide train-the-trainer training and collaborate with the recipients of Category 2 grant funds. The

applicant must provide a proposed strategy to initiate contact and collaborate with Category 2 grant recipients in order to implement the outreach and training described above. The applicant must enter into a MOU agreement with the recipient of Category 2 grant awards within 60 days of the grant award (year 2).

iii. Project Work Plan (10 points)

The applicant must provide a comprehensive project work plan. Factors considered in evaluating the project work plan will include: (1) The presentation of a coherent plan that demonstrates the applicant's complete understanding of all the activities, responsibilities, and costs required to implement each phase of the project and achieve projected outcomes within the timeframe of the grant; and (2) the demonstrated feasibility and reasonableness of the timeline for accomplishing all necessary start-up activities, including the ability to begin start-up activities immediately following the grant start date of no later than July 1, 2010, and to launch a beta-version of the HVCP site no later than July 1, 2011. Applicants must present this work plan in a table that includes the following categories:

• *Project Tasks.* Applicants must provide a detailed timeline for the six major tasks: (1) Asset mapping; (2) Gap analysis; (3) HVCP clearinghouse design and development; (4) Assessment development; (5) Online readiness, refresher and prerequisite training; and (6) Outreach, Training and Collaboration Activities.

• *Activities.* Applicants must identify the major activities required to implement each phase of the project. For each activity, include the following information: (a) Start Date; (b) End Date; (c) the project partner(s) that will be primarily responsible for performing each activity; (d) Key tasks associated with each activity; and (e) Key project milestones, with a list of the target dates and associated outcomes projected.

iv. Sustainability Options (5 points)

The Project Work Plan must include information on the development of a proposed sustainability options document, as described in Section III.C.2, options may include potential partnerships and leveraged resources. The Project Work Plan must include adequate time throughout the life of the grant to conduct sustainability planning. Applicants must build in specific meetings or activities and deliverables in the Project Work Plan that will focus on sustainability planning and the development of a written sustainability options document, which will be a required deliverable submitted to ETA at the end of the grant.

2. Platform Design and Technical Specifications (15 points)

ETA seeks to make this nationwide HVCP available and accessible to end users with computer equipment ranging from basic to sophisticated and internet access speeds ranging from low to high. Applicants must take this into consideration when designing the platform.

i. Platform Design (10 points)

The applicant should submit either a process flow diagram or a site map to illustrate the structure of the proposed HVCP. The applicant may also provide information (description or flow chart) detailing a user's experience on the proposed HVCP. This and other information provided regarding the platform design can be included either in the technical proposal or in the attachments to the technical proposal.

ii. Technical Specifications (5 points)

The applicant must fully and clearly describe how the finished HVCP platform will meet or exceed the following technical specifications:

• The platform should be developed in a nonproprietary format. The proposed open data structure must enable multidimensional integration (horizontal, vertical, future and legacy) with complementary systems;

• The platform must be modular, scalable, extensible, highly-available and flexible to provide an individual user experience;

• The database should be Open Database Connectivity (ODBC) compliant;

• The proposed system should be compatible with standard web browsers (Internet Explorer 7 or higher, Firefox 2.0 or higher, Mozilla 1.7 or higher, Netscape 8.0 or higher, AOL 8 or higher, Google Chrome 1.0 or higher, Opera 8.0 or higher, Safari 2.0 or higher); and

• The completed system must be compliant with section 508 of the Americans with Disabilities Act of 1990 (see *http://www.ada.gov/websites2.htm*).

3. Organizational Capacity and Technical Expertise (25 points)

The applicant must fully and clearly describe its capacity and its partners' capacity (if applicable) to effectively staff and support the proposed project. The application must also fully demonstrate the applicant's fiscal, administrative, and technical capacity and expertise to implement the key components of this project, including designing and hosting Web sites and developing/validating career and/or skill assessment instruments and describe the track record of the applicant and its partners in implementing projects of similar focus, size, and scope.

Scoring under this criterion will be based on the extent to which applicants provide evidence of the following:

i. Fiscal, Administrative, and Technical Capacity and Experience (15 points)

The application must provide strong evidence that the applicant and its partners have the fiscal, administrative, and technical capacity and experience to effectively administer this grant. Discussion should include:

• A full description of the applicant's capacity, including its systems, processes, and administrative controls that will enable it to comply with Federal rules and regulations related to the grant's fiscal and administrative requirements.

• Strong evidence that the applicant and/or its strategic partners (as identified in section III.A) have: (a) Technical skill and expertise in designing and operating online platforms and applications; (b) significant knowledge of healthcare occupations, including an understanding of the knowledge, skills, and abilities needed for these occupations, as well as associated training, education, and licensure or certification programs; (c) significant knowledge and experience in designing and delivering career guidance, particularly in online and virtual environments that reflects sensitivity to the needs of a diverse workforce; (d) expertise and experience in developing assessments. Applicants must provide a letter or letters of commitment (See section IV.B for instructions on submitting a required letter of commitment). The letter/letters should describe the roles and responsibilities of each partner.

ii. Staff Capacity (10 points)

Strong evidence that the applicant and its partners have the staff capacity to implement the proposed project must be provided. Scoring under this criterion will be based on the extent to which applicants address the following factors:

• The proposed staffing pattern for the project, including program management, technical, administrative, and program staff, which demonstrates that the role(s) and time commitment of the proposed staff are sufficient to ensure proper direction, management, implementation, and timely completion of each component and task.

• Where a specific project manager is identified, the applicant must demonstrate that the qualifications and level of experience of the proposed project manager are sufficient to ensure

proper management of the project. Where no project manager is identified, the applicant should discuss the minimum qualifications and level of experience that will be required for the position.

4. Deliverables and Outcomes (20 points)

The applicant must demonstrate a results-oriented approach to managing and operating its project by providing projections for all outcome categories relevant to measuring the success or impact of the project. The applicant must include projected outcomes, which will be used as goals for the grant. Scoring under this section will be based on the following:

i. Deliverables (10 points)

The applicant must provide a list of deliverables such as asset map, gap analysis, assessment tool and a sustainability options document and provide a brief description of each deliverable. For the assessment tool deliverable, the grantee will provide relevant testing and validation documentation. For the sustainability document deliverable, the grantee will describe options for sustaining the HVCP, as described in section III.C.2.

ii. Outcomes (10 points)

The applicant must provide a methodology for tracking outcomes as well as provide projections outcomes including, but not limited to the following outcome categories:

- Web Analytics that may include a number of site visits,
- Number of registered users per service (examples include career exploration, online training, job search, etc.)
- Number of trainers trained (train-the-trainer sessions)

B. Evaluation Criteria: Category 2—Enhancing the Ability of Community- and Faith-Based Organizations To Deliver Virtual Career Exploration Services, Including Healthcare Careers

This section identifies and describes the criteria that will be used to evaluate the grant proposals for Category 2. These criteria and point values are:

Criterion	Points
1. Statement of Need	15
2. Strategy and Project Work Plan	40
3. Project Management and Organizational Capacity	25
4. Outcomes	20
Total	100

1. Statement of Need (15 points)

Applicants must fully demonstrate a clear and specific need for the Federal investment in the proposed activities. It is critical throughout this section that applicants are explicit and specific as possible in citing sources of data and analysis. Applicants should use all relevant data from a wide variety of traditional resources (e.g., BLS reports, and state surveys) and non-traditional information sources including consultation with industry associations, or tracking private sector and government infrastructure investments, building permits, job postings, and business hiring trends. Points for this section will be based on the relevance, completeness, and quality of data and analysis which should serve as the foundation for the Strategy and Project Work Plan as follows:

i. Demographics (5 points)

Applicants must fully describe the demographics and characteristics of the clients served by the community- or faith-based organization at each local site and their existing level of information and computer technology literacy and ability to make use of Internet based sites for planning career pathways, including identifying career goals, planning required education and training, and applying for jobs in their chosen career field.

ii. Existing Need (10 points)

Applicants must include a brief inventory of existing computer access for clients at each local site, including the ratio of client to computer work stations, the capacity of broadband access, any time limitations on customer use, existing software or programs currently used for information and computer technology literacy training, if any. Applicants must provide a full description of the specific types of information and training, if any, available for customers and clients regarding career exploration and decision-making, labor market information on in-demand industries and occupations, access to and use of online training and career assessments, including whether capacity is adequate or not to meet current needs of the additional numbers to be served through the grant.

2. Strategy and Project Work Plan (40 points)

The applicant must provide a complete and very clear explanation of its proposed strategy and its implementation plans. The applicant must present a comprehensive work plan for the project, following the format provided later in this section. Points for this criterion will be awarded for the following factors:

i. Proposed Capacity-Building Strategies (5 points)

Applicants must provide a detailed description of its proposed capacity-building strategies. The applicant must describe the proposed computer literacy and career development strategy in full (described in section I.F); explain how the proposed capacity building, staff training, and customer training addresses the applicant's statement of need; and, demonstrate how the proposed project will effectively deliver improved career planning services including to diverse populations, such as diverse cultural communities, individuals with limited English proficiency, low-income individuals, individuals with disabilities, veterans, and other underserved groups. Staff development may include training leading to credentials in career advising or coaching. In support of the proposal, applicants should describe any evidence-based research that they considered in designing the strategy (years 1 and 2).

ii. Roles and Commitment of Project Partners (10 points)

Scoring on this section will be based on the extent to which the applicant fully and clearly demonstrates the breadth and depth of their partners' commitment to the proposed project, by addressing the following factors:

- Applicants must fully and clearly demonstrate they have assembled a comprehensive and representative partnership, including providing a clear description of partner involvement in the development of the technical proposal. The applicant should fully describe the specific roles and level of participation of each of the project partners listed in III.A.2.ii including education/training, expertise, and/or other activities that partners will contribute to the project.
- The applicant must also demonstrate a strong commitment from its partners by providing a letter of commitment signed by all partners (See section IV.B for instructions on submitting a required letter of commitment).

iii. Proposed Recruitment and Pre-Training Activities, Training and Collaboration Strategies (15 points)

- Recruitment and Pre-Training Activities: The applicant must provide a comprehensive outreach and recruitment strategy that is inclusive of the diverse populations defined in the statement of need, that defines a clear process for finding and referring customers to the career planning and information and computer literacy programs, and describes pre-training activities such as case management services and assessment services, if applicable. The applicant must clearly identify how the proposed strategy will enable the project to effectively recruit

those populations and identify any potential barriers to employment (years 1 and 2).

• Training: DOL encourages applicants to base their training strategies on program models that have shown promising outcomes for serving the populations that are the primary customers of the applicant organization. The applicant must provide a detailed explanation of the proposed career exploration training activities to assist clients in using online career and employment resources, including the HCVP. The application should also include a discussion of how the design of the training activities will accommodate the current skill and education level (including literacy and computer literacy), age, language barriers, and level of work experience of the populations. The applicant must also describe how the project will integrate basic skills, computer literacy, and career planning training where appropriate; take place at times and locations that are convenient and easily accessible for the populations; provide career planning for occupations and jobs, including those in healthcare; educate individuals about opportunities for career advancement and wage growth within the health industry and career pathways; and provide comprehensive coaching to help individuals take advantage of those opportunities (years 1 and 2).

• Collaboration: The applicant must collaborate with the recipient of Category 1 grant funds, who will provide training to Category 2 grant recipients regarding the new HVCP. The applicant must provide a proposed strategy to collaborate with the Category 1 grant recipient. The applicant must enter into a MOU agreement with the recipient of Category 1 grant award within 60 days of the grant award. The Category 1 grant recipient will initiate the process of developing an MOU agreement. Category 2 applicants must demonstrate a willingness to work with the Category 1 grant recipient.

iv. Project Work Plan (10 points)

The applicant must provide a comprehensive project work plan. Factors considered in evaluating the project work plan will include: (1) The presentation of a coherent plan that demonstrates the applicant's complete understanding of all the activities, responsibilities, and costs required to implement each phase of the project and achieve projected outcomes within the timeframe of the grant; (2) the demonstrated feasibility and reasonableness of the timeline for accomplishing all necessary start-up and education/training activities, including the ability to begin start-up activities immediately following the grant start date of no later than July 1, 2010, and to begin education and training activities as soon as possible; and, (3) the extent to which the budget aligns with the proposed work plan and is justified with respect to the adequacy and reasonableness of resources requested. Applicants must present this work plan in a table that includes the following categories:

• *Project Tasks:* Lay out the timeline for the four major tasks—Capacity Building/Equipment Purchase and Set-Up, Collaboration with Category 1 recipient, Recruiting participants, and Serving participants.

• *Activities:* Identify the major activities required to implement each phase of the project. For each activity, include the following information: (a) Start Date; (b) End Date; (c) Project partner(s) that will be primarily responsible for performing each activity; (d) Key tasks associated with each activity; (e) Key project milestones, with a list of the target dates and associated outcomes projected for capacity building efforts including technology upgrades, recruitment of participants, and participants served; and (f) As accurately as possible, list the sub-total budget dollar amount associated with each activity.

3. Project Management and Organizational Capacity (25 points)

The applicant must fully describe its capacity, including its partners' capacity, to effectively staff the proposed initiative. The application must also fully demonstrate the applicant's fiscal, administrative, and performance management capacity to implement the key components of this project, and the track record of the applicant and its partners in implementing projects of similar focus, size, and scope.

Scoring under this criterion will be based on the extent to which applicants provide evidence of the following:

i. Staff Capacity (10 points)

Strong evidence that the applicant and its partners, including local affiliates, have the staff capacity to implement the proposed initiative must be provided. Discussion should include:

• The proposed staffing pattern for the project, including program management and administrative staff and program staff, which demonstrates that the role(s) and time commitment of the proposed staff are sufficient to ensure proper direction, management, implementation, and timely completion of each project.

• Where a project manager is identified, the applicant must demonstrate that the qualifications and level of experience of the proposed project manager are sufficient to ensure proper management of the project. Where no project manager is identified, the applicant should discuss the minimum qualifications and level of experience that will be required for the position.

ii. Fiscal, Administrative, and Performance Management Capacity (10 points)

The application must provide strong evidence that the applicant and its partners have the fiscal, administrative, and performance management capacity to effectively administer this grant. Discussion should include:

• A full description of the applicant's capacity, including its systems, processes, and administrative controls that will enable it to comply with Federal rules and regulations related to the grant's fiscal and administrative requirements.

• A full description of the applicant's capacity, including its systems and processes, that will support the grant's performance management requirements through effective tracking of participant status and performance outcomes including both participant-level data and aggregate outcomes. The applicant must include an explanation of the applicant's processes and systems for tracking participants, as well as collecting and managing data in a way that allows for accurate and timely reporting of performance outcomes.

iii. Applicant's Experience (5 points)

The applicant must demonstrate its experience leading or participating significantly in a comprehensive partnership, and the experience of the applicant and its partners in effectively implementing and operating career exploration, career and education planning, and job search initiatives of similar focus, size and scope. The discussion must include:

• Specific examples of the applicant's experience in leading or participating significantly in a partnership that focused on career planning and preparation for diverse populations, including a description of the programmatic goals of the project, and a demonstration of the results achieved by that project.

• Specific examples of the applicant's track record administering Federal, State, or local grants. Applicants that have not received grants before should provide specific examples of their program management experiences, or other relevant experiences administering Federal, State, or local funds. Examples should include the programmatic goals and programmatic,

fiscal, and administrative results from these projects.

• A description of the applicant's and its partners' experience in projects providing career planning services to diverse individuals including the programmatic goals and results of the projects.

4. Outcomes (20 points)

The applicant must demonstrate a results-oriented approach to managing and operating its project by providing projections for all outcome categories relevant to measuring the success or impact of the project, providing an estimated cost per participant, describing the outcomes that will be produced as a result of the grant activities, and fully demonstrating the appropriateness and feasibility of achieving these results within the grant period of performance. The applicant must include projected outcomes, which will be used as goals for the grant. The applicant must provide projections and track outcomes including but not limited to the following outcome categories for all participants served with grant funds:

• Total number of sites affected by capacity building efforts;
• Total participants served;
• Percentage increase in participants due to capacity building efforts;
• Amount of increased capacity provided through grant funds;

Applicants must collect and report participant-level data from the following categories:

• Demographic and socioeconomic characteristics;
• Services provided; and
• Outcomes achieved.

C. Review and Selection Process

Applications for grants under this Solicitation will be accepted after the publication of this announcement and until the closing date. A technical review panel will carefully evaluate applications against the selection criteria. These criteria are based on the policy goals, priorities, and emphases set forth in this SGA. Up to 100 points may be awarded to an application, depending on the quality of the responses to the required information described in section V.A. The ranked scores will serve as the primary basis for selection of applications for funding, in conjunction with other factors such as urban, rural, and geographic balance; the availability of funds; and which proposals are most advantageous to the government. The panel results are advisory in nature and not binding on the Grant Officer. The Grant Officer may consider any information that comes to his/her attention. The government may elect to award the grant(s) with or without discussions with the applicant. Should a grant be awarded without discussions, the award will be based on the applicant's signature on the SF–424, including electronic signature via E–Authentication on *http://www.grants.gov,* which constitutes a binding offer by the applicant.

VI. Award Administration Information

A. Award Notices

All award notifications will be posted on the ETA Homepage (*http://www.doleta.gov*). Applicants selected for award will be contacted directly before the grant's execution and non-selected applicants will be notified by mail. Selection of an organization as a grantee does not constitute approval of the grant application as submitted. Before the actual grant is awarded, ETA may enter into negotiations about such items as program components, staffing and funding levels, and administrative systems in place to support grant implementation. If the negotiations do not result in a mutually acceptable submission, the Grant Officer reserves the right to terminate the negotiation and decline to fund the application.

B. Administrative and National Policy Requirements

1. Administrative Program Requirements

All grantees will be subject to all applicable Federal laws, regulations, and the applicable OMB Circulars. The grant(s) awarded under this SGA will be subject to the following administrative standards and provisions:

i. Non-Profit Organizations—OMB Circulars A–122 (Cost Principles) and 29 CFR part 95 (Administrative Requirements).

ii. Educational Institutions—OMB Circulars A–21 (Cost Principles) and 29 CFR part 95 (Administrative Requirements).

iii. State and Local Governments—OMB Circulars A–87 (Cost Principles) and 29 CFR part 97 (Administrative Requirements).

iv. Profit Making Commercial Firms—Federal Acquisition Regulation (FAR)—48 CFR part 31 (Cost Principles), and 29 CFR part 95 (Administrative Requirements).

v. All entities must comply with 29 CFR parts 93 (New Restrictions on Lobbying) and 98 (Governmentwide Debarment and Suspension), and, where applicable, 29 CFR parts 96 and 99 (Audit Requirements).

vi. 29 CFR part 2, subpart D—Equal Treatment in Department of Labor Programs for Religious Organizations, Protection of Religious Liberty of Department of Labor Social Service Providers and Beneficiaries.

vii. 29 CFR part 31—Nondiscrimination in Federally Assisted Programs of the Department of Labor—Effectuation of Title VI of the Civil Rights Act of 1964.

viii. 29 CFR part 32—Nondiscrimination on the Basis of Handicap in Programs and Activities Receiving or Benefiting from Federal Financial Assistance.

ix. 29 CFR part 33—Enforcement of Nondiscrimination on the Basis of Handicap in Programs or Activities Conducted by the Department of Labor.

x. 29 CFR part 35—Nondiscrimination on the Basis of Age in Programs or Activities Receiving Federal Financial Assistance from the Department of Labor.

xi. 29 CFR part 36—Nondiscrimination on the Basis of Sex in Education Programs or Activities Receiving Federal Financial Assistance.

The following administrative standards and provisions may be applicable:

i. The Workforce Investment Act of 1998, Public Law No. 105–220, 112 Stat. 936 (codified as amended at 29 U.S.C. 2801 *et seq.*) and 20 CFR part 667 (General Fiscal and Administrative Rules).

ii. 29 CFR part 29 and 30—Apprenticeship and Equal Employment Opportunity in Apprenticeship and Training; and

iii. 29 CFR part 37—Implementation of the Nondiscrimination and Equal Opportunity Provisions of the Workforce Investment Act of 1998. The Department notes that the Religious Freedom Restoration Act (RFRA), 42 U.S.C. 2000bb, applies to all Federal law and its implementation. If your organization is a faith-based organization that makes hiring decisions on the basis of religious belief, it may be entitled to receive Federal financial assistance under Title I of WIA and maintain that hiring practice even though Section 188 of WIA contains a general ban on religious discrimination in employment. If you are awarded a grant, you will be provided with information on how to request such an exemption.

iv. Under WIA Section 181(b)(4), health and safety standards established under Federal and State law otherwise applicable to working conditions of employees are equally applicable to working conditions of participants engaged in training and other activities. Applicants that are awarded grants through this SGA are reminded that

these health and safety standards apply to participants in these grants.

In accordance with section 18 of the Lobbying Disclosure Act of 1995 (Pub. L. 104–65) (2 U.S.C. 1611), non-profit entities incorporated under Internal Revenue Service Code Section 501(c)(4) that engage in lobbying activities are not eligible to receive Federal funds and grants.

Except as specifically provided in this SGA, DOL/ETA's acceptance of a proposal and an award of Federal funds to sponsor any programs(s) does not provide a waiver of any grant requirements and/or procedures. For example, the OMB Circulars require that an entity's procurement procedures must ensure that all procurement transactions are conducted, as much as practical, to provide open and free competition. If a proposal identifies a specific entity to provide services, the DOL's award does not provide the justification or basis to sole source the procurement, i.e., avoid competition, unless the activity is regarded as the primary work of an official partner to the application.

2. Special Program Requirements

i. Evaluation

DOL may require that the program or project participate in an evaluation of overall performance of ETA grants.

C. Reporting

Quarterly financial reports, quarterly progress reports, and MIS data will be submitted by the grantee electronically. The grantee is required to provide the reports and documents listed below:

1. Quarterly Financial Reports

A Quarterly Financial Status Report (ETA 9130) is required until such time as all funds have been expended or the grant period has expired. Quarterly reports are due 45 days after the end of each calendar year quarter. Grantees must use DOL's Online Electronic Reporting System and information and instructions will be provided to grantees.

2. Quarterly Performance Reports

The grantee must submit a quarterly progress report within 45 days after the end of each calendar year quarter. The report will include quarterly information regarding grant activities. The last quarterly progress report that grantees submit will serve as the grant's Final Performance Report. This report should provide both quarterly and cumulative information on the grant's activities. It must summarize project activities, employment outcomes and other deliverables, and related results of the project, and should thoroughly document the training or labor market information approaches used by the grantee. DOL will provide grantees with formal guidance about the data and other information that is required to be collected and reported on either a regular basis or special request basis. Grantees must agree to meet DOL reporting requirements.

3. Record Retention

Applicants must be prepared to follow Federal guidelines on record retention, which require grantees to maintain all records pertaining to grant activities for a period of not less than three years from the time of final grant close-out.

4. American Recovery and Reinvestment Act of 2009 (Pub. L. 111–5) Provisions

Prospective applicants are advised that, if they receive an award, they must comply with all requirements of the American Recovery and Reinvestment Act of 2009 [Pub. L. 111–5]. Applicants are advised to review the Act and implementing OMB guidance in the development of their proposals. Requirements include, but are not limited to:

a. Adherence to all grant clauses and conditions as they relate to Recovery Act activity.

b. Prohibition on expenditure of funds for activities at any casino or other gambling establishment, aquarium, zoo, golf course or swimming pool.

c. Compliance with the requirements to obtain a D–U–N–S® number and register with the Central Contractor Registry (CCR). ETA has issued additional guidance related to reports which can be found in the Training and Employment Guidance Letter NO. 29.08, dated June 10, 2009.

d. Submission of required reports in accordance with Section 1512 of the Recovery Act. These reports will be due quarterly within 10 days of the end of the reporting period and are in addition to ETA required reports addressed in section VI.C of this SGA. ETA will issue additional guidance related to these reports and their submission requirements shortly.

Implementing OMB guidance may be found at *http://www.recovery.gov.*

VII. Agency Contacts

For further information regarding this SGA, please contact Melissa Abdullah, Grants Management Specialist, Division of Federal Assistance, at (202) 693–3346 (This is not a toll-free number). Applicants should e-mail all technical questions to *Abdullah, Melissa@dol.gov* and must specifically reference SGA/DFA PY 09–09, and along with question(s), include a contact name, fax and phone number. This announcement is being made available on the ETA Web site at *http://www.doleta.gov/grants* and at *http://www.grants.gov.*

VIII. Additional Resources of Interest to Applicants

A. Web-Based Resources

DOL maintains a number of web-based resources that may be of assistance to applicants. For example, the CareerOneStop portal (*http://www.careeronestop.org*), which provides national and state career information on occupations; the Occupational Information Network (O*NET) Online (*http://online.onetcenter.org*) which provides occupational competency profiles; and America's Service Locator (*http://www.servicelocator.org*), which provides a directory of our nation's One-Stop Career Centers.

B. Industry Competency Models and Career Clusters

ETA supports an Industry Competency Model Initiative to promote an understanding of the skill sets and competencies that are essential to an educated and skilled workforce. A competency model is a collection of competencies that, taken together, define successful performance in a particular work setting. Competency models serve as a starting point for the design and implementation of workforce and talent development programs. To learn about the industry-validated models visit the Competency Model Clearinghouse (CMC) at *http://www.careeronestop.org/CompetencyModel.* The CMC site also provides tools to build or customize industry models, as well as tools to build career ladders and career lattices for specific regional economies.

Career Clusters and Industry Competency Models both identify foundational and technical competencies, but their efforts are not duplicative. The Career Clusters link to specific career pathways in sixteen career cluster areas and place greater emphasis on elements needed for curriculum performance objectives; measurement criteria; scope and sequence of courses in a program of study; and development of assessments. Information about the sixteen career cluster areas can be found by accessing: *www.careerclusters.org.*

C. Workforce3One Resources

1. ETA encourages applicants to view the information gathered through the

conference calls with Federal agency partners, industry stakeholders, educators, and local practitioners. The information on resources identified can be found on Workforce3One.org at: *http://www.workforce3one.org/view/2001008333909172195/info.*

2. ETA encourages applicants to view the online tutorial, "Grant Applications 101: A Plain English Guide to ETA Competitive Grants," available through Workforce3One at: *http://www.workforce3one.org/page/grants_toolkit.*

D. Working With Other Recovery Act Programs and Federal Partners

The Recovery Act made funds available to a number of other Federal programs that will impact the creation and expansion of healthcare occupations and other high growth and emerging industries, as well as providing training for those occupations. DOL is partnering with other Federal agencies to support the creation of jobs by developing a pipeline of skilled workers in the healthcare industry and other high growth and emerging industries. Where possible, ETA encourages applicants to connect their workforce development strategies to other Recovery Act-funded projects that provide training, create jobs or impact the skill requirements of existing jobs. ETA recommends that applicants review other parts of the Recovery Act. For example, there are specific Recovery Act activities related to healthcare through the Department of Education and Department of Health and Human Services (HHS), Health Resources and Services Administration (HRSA). For other high growth and emerging industries, it may be appropriate to review other Recovery Act programs from the Department of Energy, Department of Transportation, etc. For links to federal agency Recovery Act Web sites, please visit *http://recovery.gov/?q=content/agencies.*

Furthermore, other Federal departments, including Education, Health and Human Services, and Energy, also have or are developing Web-based resources that should be leveraged or linked to through this project. DOL will make the connections between the HVCP grantee and cognizant Federal officials in relevant Federal departments and agencies, during the first 60 days following award.

IX. Other Information

OMB Information Collection No. 1225–0086

OMB Information Collection No 1225–0086, Expires November 30, 2012.

According to the Paperwork Reduction Act of 1995, no persons are required to respond to a collection of information unless such collection displays a valid OMB control number. Public reporting burden for this collection of information is estimated to average 20 hours per response, including time for reviewing instructions, searching existing data sources, gathering and maintaining the data needed, and completing and reviewing the collection of information. Send comments regarding the burden estimated or any other aspect of this collection of information, including suggestions for reducing this burden, to the U.S. Department of Labor, to the attention of Darrin A. King, Departmental Clearance Officer, 200 Constitution Avenue NW., Room N1301, Washington, DC 20210. Comments may also be e-mailed to *DOL_PRA_PUBLIC@dol.gov.* Please do not return the completed application to this address. Send it to the sponsoring agency as specified in this solicitation.

This information is being collected for the purpose of awarding a grant. The information collected through this "Solicitation for Grant Applications" will be used by the Department of Labor to ensure that grants are awarded to the applicant best suited to perform the functions of the grant. Submission of this information is required in order for the applicant to be considered for award of this grant. Unless otherwise specifically noted in this announcement, information submitted in the application is not considered to be confidential.

Please be advised that the Grant Officer for this competition is James Stockton.

Signed at Washington, DC, this 2nd day of April 2010.

Donna Kelly,

Grant Officer, Employment and Training Administration.

[FR Doc. 2010–7869 Filed 4–6–10; 8:45 am]

BILLING CODE 4510–FN–P

NATIONAL SCIENCE FOUNDATION

National Science Board; Sunshine Act Meetings; Notice

The National Science Board's Subcommittee on Facilities, Committee on Strategy and Budget, pursuant to NSF regulations (45 CFR Part 614), the National Science Foundation Act, as amended (42 U.S.C. 1862n–5), and the Government in the Sunshine Act (5 U.S.C. 552b), hereby gives notice in regard to the scheduling of meetings for the transaction of National Science Board business and other matters specified, as follows:

Date and Time: Tuesday, April 13, 2010 at 11 a.m.

Subject Matter: Discussion of Draft Report, Planning for May 2010 Meeting.

Status: Open.

This meeting will be held by teleconference originating at the National Science Board Office, National Science Foundation, 4201 Wilson Blvd., Arlington, VA 22230. Stafford II Room 515 will be available to the public to listen to this teleconference meeting. All visitors must contact the Board Office at least one day prior to the meeting to arrange for a visitor's badge. Call 703–292–7000 to request your badge, which will be ready for pick-up at the visitors desk on the day of the meeting. All visitors must report to the NSF visitor desk at the 9th and N. Stuart Streets entrance to receive their visitor's badge the day of the teleconference.

Please refer to the National Science Board Web site (*http://www.nsf.gov/nsb*) for information or schedule updates, or contact: Elizabeth Strickland, National Science Foundation, 4201 Wilson Blvd., Arlington, VA 22230. Telephone: (703) 292–7000.

Dated: April 5, 2010.

Suzanne H. Plimpton,

Management Analyst, National Science Foundation.

[FR Doc. 2010–8011 Filed 4–5–10; 4:15 pm]

BILLING CODE 7555–01–P

NUCLEAR REGULATORY COMMISSION

Advisory Committee on Reactor Safeguards; Meeting of the ACRS Subcommittee on Power Uprates; Amendment to April 23, 2010, ACRS Meeting Federal Register Notice

The **Federal Register** Notice for the ACRS Subcommittee Meeting on Power Uprates scheduled to be held on April 23, 2010, is being amended to notify the following:

Instead of reviewing Supplement 3 to Topical Report NEDC–33173P–A, "Applicability of GE Methods to Expanded Domains," the Subcommittee will be reviewing the Boiling Water Reactor Owners Group's (BWROG) topical report NEDC–33347P, "Containment Overpressure Credit for

Net Positive Suction Head (NPSH)," and the NRC Staff document "NRC Draft Guidance for the Use of Containment Accident Pressure in Determining the NPSH Margin of ECCS and Containment Heat Removal Pumps."

The meeting will be open to public attendance, with the exception of a portion that may be closed to protect information that is proprietary to General Electric Hitachi (GEH), pursuant to 5 U.S.C. 552b(c)(4).

The notice of this meeting was previously published in the **Federal Register** on Tuesday, March 25, 2010, [75 FR 16203–16204]. All other items remain the same as previously published.

Further information regarding this meeting can be obtained by contacting the Designated Federal Official Zena Abdullahi, (*Telephone:* 301–415–8716, *E-mail: Zena.Abdullahi@nrc.gov*).

Dated: April 1, 2010.

Antonio F. Dias,

Branch Chief, Reactor Safety Branch B, Advisory Committee on Reactor Safeguards.

[FR Doc. 2010–7876 Filed 4–6–10; 8:45 am]

BILLING CODE 7590–01–P

OFFICE OF PERSONNEL MANAGEMENT

[OMB Control No. 3206–0194; Form RI 92–22]

Submission for OMB Review; Request for Review of a Revised Information Collection

AGENCY: Office of Personnel Management.

ACTION: Notice.

SUMMARY: In accordance with the Paperwork Reduction Act of 1995 (Pub. L. 104–13, May 22, 1995), this notice announces that the Office of Personnel Management (OPM) has submitted to the Office of Management and Budget (OMB) a request for review of a revised information collection. This information collection, "Annuity Supplement Earnings Report" (OMB Control No. 3206–0194; Form RI 92–22), is used each year to obtain the earned income of Federal Employees Retirement System (FERS) annuitants receiving an annuity supplement. The annuity supplement is paid to eligible FERS annuitants who are not retired on disability and are not yet age 62. The supplement approximates the portion of a full career Social Security benefit earned while under FERS and ends at age 62. Like Social Security benefits, the annuity supplement is subject to an earnings limitation.

Approximately 13,000 RI 92–22 forms are completed annually. Each form requires approximately 15 minutes to complete. The annual estimated burden is 3,250 hours.

For copies of this proposal, contact Cyrus S. Benson on (202) 606–4808, FAX (202) 606–0910 or via E-mail to *Cyrus.Benson@opm.gov.* Please include a mailing address with your request.

DATES: Comments on this proposal should be received within 30 days from the date of this publication.

ADDRESSES: Send or deliver comments to—

James K. Freiert (Acting), Deputy Associate Director, Retirement Operations, Retirement and Benefits, U.S. Office of Personnel Management, 1900 E Street, NW., Room 3305, Washington, DC 20415–3500; and

OPM Desk Officer, Office of Information & Regulatory Affairs, Office of Management and Budget, New Executive Office Building, 725 17th Street, NW., Room 10235, Washington, DC 20503.

For information regarding administrative coordination contact: Cyrus S. Benson, Team Leader, Publications Team, RB/RM/Administrative Services/PT, U.S. Office of Personnel Management, 1900 E Street, NW., Room 4H28, Washington, DC 20415, (202) 606–4808.

U.S. Office of Personnel Management.

John Berry,

Director.

[FR Doc. 2010–7920 Filed 4–6–10; 8:45 am]

BILLING CODE 6325–38–P

OFFICE OF PERSONNEL MANAGEMENT

Submission for OMB Review; Request for Comments on a Revised Information Collection: (OMB Control No. 3206–0226; Form RI 38–128)

AGENCY: Office of Personnel Management.

ACTION: Notice.

SUMMARY: In accordance with the Paperwork Reduction Act of 1995 (Pub. L. 104–13, May 22, 1995), this notice announces that the Office of Personnel Management (OPM) has submitted to the Office of Management and Budget (OMB) a request for review of a revised information collection. This information collection, "It's Time to Sign Up for Direct Deposit" (OMB Control No. 3206–0226; Form RI 38–128), is primarily used by OPM to give recent retirees the opportunity to waive Direct Deposit of their annuity payments. The form is sent only if the separating agency did not give the retiring employee this election opportunity. This form may also be used to enroll in Direct Deposit, which was its primary use before Public Law 104–134 was passed. This law requires OPM to make all annuity payments by Direct Deposit unless the payee has waived the service in writing.

We estimate 20,000 forms are completed annually. The form takes approximately 30 minutes to complete. The annual estimated burden is 10,000 hours.

For copies of this proposal, contact Cyrus S. Benson on (202) 606–4808, FAX (202) 606–0910 or via e-mail to *Cyrus.Benson@opm.gov.* Please include a mailing address with your request.

DATES: Comments on this proposal should be received within 30 days from the date of this publication.

ADDRESSES: Send or deliver comments to—

James K. Freiert (Acting), Deputy Associate Director, Retirement Operations, Retirement and Benefits, U.S. Office of Personnel Management, 1900 E Street, NW., Room 3305, Washington, DC 20415–3500; and

OPM Desk Officer, Office of Information & Regulatory Affairs, Office of Management and Budget, New Executive Office Building, 725 17th Street, NW., Room 10235, Washington, DC 20503.

For information regarding administrative coordination contact: Cyrus S. Benson, Team Leader, Publications Team, Retirement and Benefits/Resource Management, U.S. Office of Personnel Management, 1900 E Street, NW., Room 4H28, Washington, DC 20415, (202) 606–4808.

U.S. Office of Personnel Management.

John Berry,

Director.

[FR Doc. 2010–7921 Filed 4–6–10; 8:45 am]

BILLING CODE 6325–38–P

OFFICE OF PERSONNEL MANAGEMENT

Submission for OMB Review; Request for Comments on a Revised Information Collection: (OMB Control No. 3206–0228; Standard Form 3112)

AGENCY: Office of Personnel Management.

ACTION: Notice.

SUMMARY: In accordance with the Paperwork Reduction Act of 1995 (Pub. L. 104–13, May 22, 1995), this notice announces that the Office of Personnel Management (OPM) has submitted to

the Office of Management and Budget (OMB) a request for review of a revised information collection. This information collection, "CSRS/FERS Documentation in Support of Disability Retirement Application" (OMB Control No. 3206–0228; Standard Form 3112), collects information from applicants for disability retirement so that OPM can determine whether to approve a disability retirement. The applicant will only complete Standard Forms 3112A and 3112C. Standard Forms 3112B, 3112D and 3112E will be completed by the immediate supervisor and the employing agency of the applicant.

Approximately 12,100 disability retirements are processed annually. We estimate it takes one hour to fill out SF 3112C. A burden of 12,100 hours is estimated for SF 3112C. SF 3112A is used each year by approximately 1,350 persons who are not Federal employees. We estimate it takes 30 minutes to fill out SF 3112A. A burden of 675 hours is estimated for SF 3112A. The total burden for SF 3112 is 12,775 hours.

All 12,100 respondents must use SF 3112C; of the 12,100, only 1,350 respondents are not Federal Employees and use SF 3112A.

For copies of this proposal, contact Cyrus S. Benson on (202) 606–4808, FAX (202) 606–0910 or via E-mail to *Cyrus.Benson@opm.gov.* Please include a mailing address with your request.

DATES: Comments on this proposal should be received within 30 days from the date of this publication.

ADDRESSES: Send or deliver comments to—James K. Freiert, Deputy Associate Director (Acting), Retirement Operations, Retirement and Benefits, U.S. Office of Personnel Management, 1900 E Street, NW., Room 3305, Washington, DC 20415–3500, and OPM Desk Officer, Office of Information & Regulatory Affairs, Office of Management and Budget, New Executive Office Building, 725 17th Street, NW., Room 10235, Washington, DC 20503.

For information regarding administrative coordination contact: Cyrus S. Benson, Team Leader, Publications Team, Retirement & Benefits/Resource Mgmt., U.S. Office of Personnel Management, 1900 E Street, NW., Room 4H28, Washington, DC 20415, (202) 606–4808.

U.S. Office of Personnel Management.

John Berry,

Director.

[FR Doc. 2010–7926 Filed 4–6–10; 8:45 am]

BILLING CODE 6325–38–P

OFFICE OF PERSONNEL MANAGEMENT

Privacy Act of 1974; Computer Matching Program

AGENCY: Office of Personnel Management.

ACTION: Notice—computer matching between the Office of Personnel Management and the Social Security Administration.

SUMMARY: In accordance with the Privacy Act of 1974 (5 U.S.C. 552a), as amended by the Computer Matching and Privacy Protection Act of 1988 (Pub. L. 100–503), Office of Management and Budget (OMB) Guidelines on the Conduct of Matching Programs (54 FR 25818 published June 19, 1989), and OMB Circular No. A–130, revised November 28, 2000, "Management of Federal Information Resources," the Office of Personnel Management (OPM) is publishing notice of its new computer matching program with the Social Security Administration (SSA).

DATES: OPM will file a report of the subject matching program with the Committee on Homeland Security and Governmental Affairs of the Senate, the Committee on Oversight and Government Reform of the House of Representatives and the Office of Information and Regulatory Affairs, Office of Management and Budget (OMB). The matching program will begin 30 days after the **Federal Register** notice has been published or 40 days after the date of OPM's submissions of the letters to Congress and OMB, whichever is later. The matching program will continue for 18 months from the beginning date and may be extended an additional 12 months thereafter. Subsequent matches will run until one of the parties advises the other in writing of its intention to reevaluate, modify and/or terminate the agreement.

ADDRESSES: Send comments to Marc Flaster, Chief, Resource Management, Retirement and Benefits, Office of Personnel Management, Room 4332, 1900 E. Street, NW., Washington, DC 20415.

FOR FURTHER INFORMATION CONTACT: James Sparrow on (202) 606–1803.

SUPPLEMENTARY INFORMATION:

A. General

The Privacy Act (5 U.S.C. 552a), as amended, establishes the conditions under which computer matching involving the Federal government could be performed and adding certain protections for individuals applying for and receiving Federal benefits. Section 7201 of the Omnibus Budget Reconciliation Act of 1990 (Pub. L. 101–508) further amended the Privacy Act regarding protections for such individuals.

The Privacy Act, as amended, regulates the use of computer matching by Federal agencies when records in a system of records are matched with other Federal, State, or local government records. Among other things, it requires Federal agencies involved in computer matching programs to:

(1) Negotiate written agreements with the other agency for agencies participating in the matching programs;

(2) Obtain the approval of the match agreement by the Data Integrity Boards (DIB) of the participating Federal agencies;

(3) Furnish detailed reports about matching programs to Congress and OMB;

(4) Notify applicants and beneficiaries that their records are subject to matching;

(5) Verify match findings before reducing, suspending, termination or denying and individual's benefits or payments.

B. OPM Computer Matches Subject to the Privacy Act

We have taken action to ensure that all of OPM's computer matching programs comply with the requirements of the Privacy Act, as amended.

Notice of Computer Matching Program, Office of Personnel Management (OPM) With the Social Security Administration (SSA)

A. Participating Agencies

OPM and SSA.

B. Purpose of the Matching Program

The purpose of this agreement is to establish the conditions under which SSA agrees to disclose tax return and/or Social Security benefit information to OPM. The SSA records will be used in redetermining and recomputing the benefits of certain annuitants and survivors whose computations are based, in part, on military service performed after December 1956 under the Civil Service Retirement System (CSRS) and certain annuitants and survivors whose annuity computation under the Federal Employees Retirement System (FERS) have a CSRS component.

C. Authority for Conducting the Matching Program

Chapters 83 and 84 of title 5 of the United States Code provide the basis for computing annuities under CSRS and FERS, respectively, and require release

of information by SSA to OPM in order to administer data exchanges involving military service performed by an individual after December 31, 1956. The CSRS requirement is codified at section 8332(j) of title 5 of the United States Code; the FERS requirement is codified at section 8422(e)(4) of title 5 of the United States Code. The responsibilities of SSA and OPM with respect to information obtained pursuant to this agreement are also in accordance with the following: the Privacy Act (5 U.S.C. 552a), as amended; section 307 of the Omnibus Budget Reconciliation Act of 1982 (Pub. L. 97–253), codified at section 8332 of title 5 of the United States Code; section 1306(a) of title 42 of the United States Code; and section 6103(1)(11) of title 26 of the United States Code.

D. Categories of Records and Individuals Covered by the Match

SSA will disclose data from its MBR file (60–0090, Master Beneficiary Record, SSA/OEEAS) and MEF file (60–0059, Earnings Recording and Self-Employment Income System, SSA/OEEAS) and manually-extracted military wage information from SSA's "1086" microfilm file when required (71 FR 1796, January 11, 2006). OPM will provide SSA with an electronic finder file from the OPM system of records published as OPM/Central–1, Civil Service Retirement and Insurance Records. The system of records involved have routine uses permitting the disclosures needed to conduct this match.

E. Privacy Safeguards and Security

The Privacy Act (5 U.S.C. 552a(o)(1)(G)) requires that each matching agreement specify procedures for ensuring the administrative, technical and physical security of the records matched and the results of such programs. All Federal agencies are subject to: the Federal Information Security Management Act of 2002 (FISMA) (44 U.S.C. 3541 *et seq.*); related OMB circulars and memorandum (e.g. OMB Circular A–130 and OMB M–06–16); National Institute of Science and Technology (NIST) directives; and the Federal Acquisition Regulations (FAR). These laws, circulars, memoranda, directives and regulations include requirements for safeguarding Federal information systems and personally identifiable information used in Federal agency business processes, as well as related reporting requirements. OPM and SSA recognize that all laws, circulars, memoranda, directives and regulations relating to the subject of this agreement and published subsequent to the effective date of this agreement must also be implemented if mandated.

FISMA requirement apply to all Federal contractors and organizations or sources that process or use Federal information, or that operate, use, or have access to Federal information systems on behalf of an agency. OPM will be responsible for oversight and compliance of their contractors and agents. Both OPM and SSA reserve the right to conduct onsite inspection to monitor compliance with FISMA regulations.

F. Inclusive Dates of the Match

The matching program shall become effective upon the signing of the agreement by both parties to the agreement and approval of the agreement by the Data Integrity Boards of the respective agencies, but no sooner than 40 days after notice of the matching program is sent to Congress and the Office of Management and Budget or 30 days after publication of this notice in the **Federal Register,** whichever is later. The matching program will continue for 18 months from the effective date and may be extended for an additional 12 months thereafter, if certain conditions are met.

U.S. Office of Personnel Management.

John Berry,

Director.

[FR Doc. 2010–7922 Filed 4–6–10; 8:45 am]

BILLING CODE 6325–38–P

POSTAL REGULATORY COMMISSION

[Docket No. N2010-1; Order No. 436]

Nationwide Change in Frequency of Postal Delivery

AGENCY: Postal Regulatory Commission.

ACTION: Notice.

SUMMARY: The Postal Service has requested an advisory opinion from the Commission on a proposed nationwide change in its longstanding 6-day street delivery operating plan. Under the plan, Saturday street delivery day would be eliminated, except for Express Mail deliveries. Some corresponding changes would be made in related aspects of service and processing. This notice addresses related preliminary procedural steps and announces the Commission's intention to hold some hearings outside of the Washington, DC area.

DATES: Interventions are due: April 26, 2010; prehearing conference: April 27, 2010.

ADDRESSES: Submit notices of intervention and other documents eletronically via the Commission's Filing Online system. Commenters who cannot submit documents electronically should contact the person identified in the **FOR FURTHER INFORMATION CONTACT** section for advice on alternatives to electronic filing.

FOR FURTHER INFORMATION CONTACT: Stephen L. Sharfman, General Counsel, 202-789-6820 or *stephen.sharfman@prc.gov.*

SUPPLEMENTARY INFORMATION: On March 30, 2010, the United States Postal Service (Postal Service) filed a request with the Postal Regulatory Commission (Commission) for the Commission to issue an advisory opinion under 39 U.S.C. 3661(c) for the elimination of Saturday delivery.[1] Section 3661(c) requires that such service changes conform to the policies reflected in title 39 of the United States Code.

The Postal Service proposes to eliminate Saturday delivery nationally, except for delivery of Express Mail and delivery to those post office boxes currently providing Saturday delivery. The change will not take place before October 1, 2010. Request at 1, 10. The Postal Service also proposes to eliminate Saturday initial processing of all mail but Express Mail and qualifying destination entry bulk mail. *Id.* at 1.

The Postal Service bases the Request on its deteriorating financial condition, precipitated by drastic volume decline. *Id.* at 3-4. If the Postal Service is authorized to make its proposed changes, it claims that its financial condition would be improved by a net of $3.1 billion annually. *Id.* at 4. The Postal Service summarizes all of its statutory service and financial obligations, and the need for operational flexibility to reduce delivery days to respond to the changing needs of the postal customer. *Id.* at 9-11.

The Postal Service's Request is accompanied by 11 pieces of testimony and 12 library references.[2] The Postal Service states that the service changes in the Request, and the basis thereof, are examined in detail in the Direct Testimony of Samuel Pulcrano on Behalf of the United States Postal Service, March 30, 2010 (USPS-T-1). That testimony indicates that collecting mail from blue street collection boxes will also be eliminated on Saturday, except to collect overflow on an as needed basis. USPS-T-1 at 4, 14. The Postal Service states it has taken stakeholder views into account in

[1] Request of the United States Postal Service for an Advisory Opinion on Changes in the Nature of Postal Services, March 30, 2010 (Request).

[2] Two of the library references are provided under seal.

planning the Saturday elimination. *Id.* at 5-6. The Postal Service also claims that it may, on an as needed basis, resume the delivery of packages/parcels during the pre-Christmas rush on Saturdays in December. *Id.* at 13. The Postal Service emphasizes that the proposed changes do not affect retail operations, some bulk mail processing, and service standards (except for adding a non-delivery day). *Id.* at 15-16.

The Postal Service sets forth the financial context of the Request in the Direct Testimony of Joseph Corbett on Behalf of the United States Postal Service, March 30, 2010 (USPS-T-2). The Postal Service outlines its financial obligations in the face of declining volume and concludes that the current service model is unsustainable. USPS-T-2 at 2-4. The Postal Service also describes the significant cost cutting measures it has implemented in the last few years. *Id.* at 7-9. The Postal Service concludes that the negative trends in volume and revenue, coupled with a volume dependant network, result in a Postal Service network that is unsustainable. *Id.* at 17-18.

The Postal Service outlines operational issues associated with the elimination of Saturday delivery in the Direct Testimony of Dean J. Granholm on Behalf of the United States Postal Service, March 30, 2010 (USPS-T-3). The Postal Service asserts it can reduce expenditures for carriers and clerks and increase efficiency on other delivery days. USPS-T-3 at 4-5. The Postal Service indicates that perhaps the biggest change for retail customers is that mail accepted on Saturday will not be processed until Monday. *Id.* at 7-8. The Postal Service states that although it will probably have to change rural routes to adjust to the workload, it intends to adhere to all of its negotiated labor agreement requirements. *Id.* at 9-10. It also indicates that field managers may have to develop plans to effectively deal with Monday holiday overflow. *Id.* at 18.

The Postal Service describes the changes to mail processing in the Direct Testimony of Frank Neri on Behalf of the United States Postal Service, March 30, 2010 (USPS-T-4). The Postal Service describes, generally, how outgoing and destinating mail is processed at a facility. USPS-T-4 at 2-3. It identifies the elimination of all Saturday outgoing mail processing activities, with the exception of Express Mail operations, as the most significant mail processing change. *Id.* at 8. The Postal Service states that mail in transit between processing facilities will still continue to be processed. *Id.* at 10. The Postal Service also forecasts mail processing operations that may be reduced to cut costs, and operations that may increase costs on other days as a result of heavier volume. *Id.* at 17-18.

The Postal Service examines the effect of a reduction in delivery days on the transportation of mail in the Direct Testimony of Luke T. Grossmann on Behalf of the United States Postal Service, March 30, 2010 (USPS-T-5). The Postal Service states that it will realign transportation networks to support a 5-day delivery mail processing and operating environment. USPS-T-5 at 5. The Postal Service estimates cost reduction through a decreased need for surface transportation in a 5-day environment. *Id.* at 6-12.

The Postal Service presents the methodology that it used to calculate cost savings realized from moving to a 5-day delivery model in the Direct Testimony of Michael D. Bradley on Behalf of the United States Postal Service, March 30, 2010 (USPS-T-6). The Postal Service provides an overview of previous estimates employed by the Commission and the Postal Service to calculate savings from a 5-day delivery environment. USPS-T-6 at 2-3. The Postal Service also states that it discards the volume variability analysis, which generally has formed a basis for cost estimates, because the change to 5-day delivery is an operational change, not a volume change. *Id.* at 3. The Postal Service examines and quantifies the direct and indirect costs identified in previous witness testimonies, and cost savings resulting from moving to a 5-day environment. *Id.* at 7-53.

The Postal Service estimates the annualized cost savings, expressed in 2009 dollars, in the Direct Testimony of Jeff Colvin on Behalf of the United States Postal Service, March 30, 2010 (USPS-T-7). This testimony builds on the methods described in USPS-T-6 by applying them to the Postal Service's costs. USPS-T-7 at 2-3. It develops the calculated net annual savings (after reduction of contribution from loss of volume) and reports the figure as $3.103 billion. *Id.* at Attachment 3. The Postal Service states that the estimate may be affected by future increases in hourly labor costs, input unit costs, delivery points, and reduced mail volumes. *Id.* at 17.

The Postal Service provides an overview of the market research activities it conducted to gauge consumer and business impact from a reduction in delivery in the Direct Testimony of Rebecca Elmore-Yalch on Behalf of United States Postal Service, March 30, 2010 (USPS-T-8). The Postal Service describes the qualitative methods it used to garner consumer and business opinion in the form of focus groups and interviews. USPS-T-8 at 4-11. The Postal Service also describes the quantitative research it employed utilizing surveys. *Id.* at 12-29. The Postal Service attempts to quantify the affect on use of postal products of moving from a 6-day to a 5-day environment. *Id.* at 30.

The Postal Service provides an assessment of the reactions of customers and commercial organizations to the proposed 5-day change and estimated volume and revenue impact in the Direct Testimony of Gregory M. Whiteman on Behalf of United States Postal Service, March 30, 2010 (USPS-T-9). The Postal Service states that most consumers and small commercial organizations thought that elimination of Saturday delivery would have little impact on their consumer or commercial requirements. USPS-T-9 at 1. The Postal Service also indicates that most respondents thought they would adapt and the adaptation would not be difficult. *Id.* Quantitatively, the Postal Service estimates the reduction of volume of 0.7 percent, producing a loss of $428 million in revenue. *Id.* at 2.

The Postal Service describes the changes to "start-the-clock" and "stop-the-clock" events used for service performance measurements that would change as a result of 5-day delivery in the Direct Testimony of Thomas G. Day on Behalf of the United States Postal Service, March 30, 2010 (USPS-T-10). The Postal Serve explains that elimination of outbound mail processing on Saturday affects when the "clock starts to run" for service performance standards. USPS-T-10 at 3. Likewise, the elimination of Saturday delivery delays the "stop-the-clock" event for those mail pieces currently being delivered on Saturday. *Id.* The testimony presents various "start-the-clock" examples for different products the Postal Service offers, and suggests that each may require realignment as a result of moving to a 5-day environment. *Id.* at 6-9.

The Postal Service describes how it will inform and prepare customers for the implementation of 5-day delivery and related service changes in the Direct Testimony of Stephen M. Kearney on Behalf of the United States Postal Service, March 30, 2010 (USPS-T-11). The Postal Service recognizes that the ability of customers to adjust will depend on the Postal Service's actions taken to clearly and effectively inform them. USPS-T-11 at 1. The Postal Service states that it will use multiple channels to reach stakeholders and garner feedback, including Customer

Advisory Councils, the National Postal Forum, print and broadcast news media, a dedicated micro-Web site, and customer outreach. *Id.* at 2-7.

The Request, according to the Postal Service, contains changes that will affect every stakeholder, internal and external, of the Postal Service. *See id.* at 1, 7.

The Request and all supporting public materials are on file in the Commission's docket room for inspection during regular business hours, and are available on the Commission's Web site at *http://www.prc.gov.*

Further procedures. Section 3661(c) of title 39 requires that the Commission afford an opportunity for formal, on-the-record hearing of the Postal Service's Request under the terms specified in sections 556 and 557 of title 5 of the United States Code before issuing its advisory opinion. All interested persons are hereby notified that notices of intervention in this proceeding shall be due on or before April 26, 2010. *See* 39 CFR 3001.20 and 3001.20a. It is the Commission's intent to hold hearings for the receipt of evidence in this proceeding.

At this time, the Commission cannot anticipate the duration, or even the exact form, proceedings on this matter will take. Participants who wish to offer their views on these issues may do so in their interventions. Due to the nature of this Initiative, the Commission also will hold public hearings outside of Washington, D.C. Dates and locations of these public hearings will be announced subsequently. The Commission urges participants to carefully consider, prior to the prehearing conference, the justification for any proposed discovery period.

The Commission will hold a prehearing conference in this docket on April 27, 2010 at which these questions will be discussed.

Public Representative. Section 3661(c) of title 39 requires the participation of an "officer of the Commission who shall be required to represent the interests of the general public" in these proceedings. Patricia A. Gallagher, Kenneth Moeller, and Larry Fenster are designated to serve as Public Representatives to represent the interests of the general public in this proceeding. The foregoing Public Representatives shall direct the activities of Commission personnel assigned to assist them and, at an appropriate time, shall provide the names of these employees for the record. Neither the Public Representatives nor the assigned personnel shall participate in or advise as to any Commission decision in this proceeding, other than in their designated capacity.

It is ordered:

1. The Commission establishes Docket No. N2010-1 to consider the Postal Service Request referred to in the body of this order.

2. The Commission will sit *en banc* in this proceeding.

3. Notices of intervention are due no later than April 26, 2010.

4. A prehearing conference is scheduled for April 27, 2010, at 10:00 a.m., in the Commission's hearing room.

5. Pursuant to 39 U.S.C. 505 and 3661(c), the Commission appoints Patricia A. Gallagher, Kenneth Moeller, and Larry Fenster to represent the interests of the general public in this proceeding.

6. The Secretary shall arrange for publication of this notice in the **Federal Register**.

By the Commission.

Shoshana M. Grove,

Secretary.

[FR Doc. 2010–7872 Filed 4–6–10; 8:45 am]

BILLING CODE 7710–FW–S

SMALL BUSINESS ADMINISTRATION

[Disaster Declaration # 12089 and # 12090]

District of Columbia Disaster # DC–00002

AGENCY: U.S. Small Business Administration.

ACTION: Notice.

SUMMARY: This is a Notice of the Presidential declaration of a major disaster for Public Assistance only for the State of District of Columbia (FEMA–1890–DR), dated 03/24/2010.

Incident: Severe winter storm and snowstorms.

Incident Period: 02/05/2010 through 02/11/2010.

Effective Date: 03/24/2010.

Physical Loan Application Deadline Date: 05/24/2010.

Economic Injury (EIDL) Loan Application Deadline Date: 12/27/2010.

ADDRESSES: Submit completed loan applications to: U.S. Small Business Administration, Processing and Disbursement Center, 14925 Kingsport Road, Fort Worth, TX 76155.

FOR FURTHER INFORMATION CONTACT: A. Escobar, Office of Disaster Assistance, U.S. Small Business Administration, 409 3rd Street, SW., Suite 6050, Washington, DC 20416.

SUPPLEMENTARY INFORMATION: Notice is hereby given that as a result of the President's major disaster declaration on 03/24/2010, Private Non-Profit organizations that provide essential services of governmental nature may file disaster loan applications at the address listed above or other locally announced locations.

The following areas have been determined to be adversely affected by the disaster:

Primary Disaster Area

District of Columbia.

The Interest Rates are:

	Percent
For Physical Damage:	
Non-Profit Organizations with Credit Available Elsewhere	3.625
Non-Profit Organizations without Credit Available Elsewhere	3.000
For Economic Injury:	
Non-Profit Organizations without Credit Available Elsewhere	3.000

The number assigned to this disaster for physical damage is 12089B and for economic injury is 12090B.

(Catalog of Federal Domestic Assistance Numbers 59002 and 59008)

James E. Rivera,

Associate Administrator for Disaster Assistance.

[FR Doc. 2010–7795 Filed 4–6–10; 8:45 am]

BILLING CODE 8025–01–P

SMALL BUSINESS ADMINISTRATION

[Disaster Declaration # 12087 and # 12088]

New Jersey Disaster # NJ–00015

AGENCY: U.S. Small Business Administration.

ACTION: Notice.

SUMMARY: This is a Notice of the Presidential declaration of a major disaster for Public Assistance only for the State of New Jersey (FEMA–1889–DR), dated 03/23/2010.

Incident: Severe winter storm and snowstorm.

Incident Period: 02/05/2010 through 02/06/2010.

DATES: *Effective Date:* 03/23/2010.

Physical Loan Application Deadline Date: 05/24/2010.

Economic Injury (EIDL) *Loan Application Deadline Date:* 12/23/2010

ADDRESSES: Submit completed loan applications to: U.S. Small Business Administration, Processing And Disbursement Center, 14925 Kingsport Road, Fort Worth, TX 76155.

FOR FURTHER INFORMATION CONTACT: A. Escobar, Office of Disaster Assistance,

U.S. Small Business Administration, 409 3rd Street, SW., Suite 6050, Washington, DC 20416

SUPPLEMENTARY INFORMATION: Notice is hereby given that as a result of the President's major disaster declaration on 03/23/2010, Private Non-Profit organizations that provide essential services of governmental nature may file disaster loan applications at the address listed above or other locally announced locations.

The following areas have been determined to be adversely affected by the disaster:

Primary Counties:
Atlantic, Burlington, Camden, Cape May, Cumberland, Gloucester, Salem.

The Interest Rates are:

	Percent
For Physical Damage:	
Non-Profit Organizations With Credit Available Elsewhere	3.625.
Non-Profit Organizations Without Credit Available Elsewhere	3.000.
For Economic Injury:	
Non-Profit Organizations Without Credit Available Elsewhere.	3.000.

The number assigned to this disaster for physical damage is 12087B and for economic injury is 12088B.

(Catalog of Federal Domestic Assistance Numbers 59002 and 59008).

James E. Rivera,

Associate Administrator for Disaster Assistance.

[FR Doc. 2010–7797 Filed 4–6–10; 8:45 am]

BILLING CODE 8025–01–P

SMALL BUSINESS ADMINISTRATION

[Disaster Declaration # 12091 and # 12092]

Maine Disaster # ME–00024

AGENCY: U.S. Small Business Administration.

ACTION: Notice.

SUMMARY: This is a Notice of the Presidential declaration of a major disaster for Public Assistance only for the State of Maine (FEMA–1891–DR), dated 03/25/2010.

Incident: Severe winter storms and flooding.

Incident Period: 02/23/2010 through 03/02/2010.

Effective Date: 03/25/2010.

Physical Loan Application Deadline Date: 05/24/2010.

Economic Injury (EIDL) Loan Application Deadline Date: 12/27/2010.

ADDRESSES: Submit completed loan applications to: U.S. Small Business Administration, Processing And Disbursement Center, 14925 Kingsport Road, Fort Worth, TX 76155.

FOR FURTHER INFORMATION CONTACT: A. Escobar, Office of Disaster Assistance, U.S. Small Business Administration, 409 3rd Street, SW., Suite 6050, Washington, DC 20416.

SUPPLEMENTARY INFORMATION: Notice is hereby given that as a result of the President's major disaster declaration on 03/25/2010, Private Non-Profit organizations that provide essential services of governmental nature may file disaster loan applications at the address listed above or other locally announced locations.

The following areas have been determined to be adversely affected by the disaster:

Primary Counties:
Cumberland, Knox, Lincoln, Sagadahoc, York.

The Interest Rates are:

	Percent
For Physical Damage:	
Non-Profit Organizations With Credit Available Elsewhere	3.625
Non-Profit Organizations Without Credit Available Elsewhere	3.000
For Economic Injury:	
Non-Profit Organizations Without Credit Available Elsewhere	3.000

The number assigned to this disaster for physical damage is 120916 and for economic injury is 120926.

(Catalog of Federal Domestic Assistance Numbers 59002 and 59008)

James E. Rivera,

Associate Administrator for Disaster Assistance.

[FR Doc. 2010–7793 Filed 4–6–10; 8:45 am]

BILLING CODE 8025–01–P

SMALL BUSINESS ADMINISTRATION

[Disaster Declaration # 12093]

North Carolina Disaster # NC–00025 Declaration of Economic Injury

AGENCY: U.S. Small Business Administration.

ACTION: Notice.

SUMMARY: This is a notice of an Economic Injury Disaster Loan (EIDL) declaration for the State of North Carolina, dated 03/26/2010.

Incident: Severe winter storms.

Incident Period: 12/18/2009 through 02/28/2010.

DATES: *Effective Date:* 03/26/2010.

EIDL Loan Application Deadline Date: 12/27/2010.

ADDRESSES: Submit completed loan applications to: U.S. Small Business Administration, Processing and Disbursement Center, 14925 Kingsport Road, Fort Worth, TX 76155.

FOR FURTHER INFORMATION CONTACT: A. Escobar, Office of Disaster Assistance, U.S. Small Business Administration, 409 3rd Street, SW., Suite 6050, Washington, DC 20416.

SUPPLEMENTARY INFORMATION: Notice is hereby given that as a result of the Administrator's EIDL declaration, applications for economic injury disaster loans may be filed at the address listed above or other locally announced locations.

The following areas have been determined to be adversely affected by the disaster:

Primary Counties: Watauga.

Contiguous Counties:
North Carolina: Ashe, Avery, Caldwell, Wilkes.
Tennessee: Johnson.

The Interest Rates are:

	Percent
Businesses And Small Agricultural Cooperatives Without Credit Available Elsewhere	4.000.
Non-Profit Organizations Without Credit Available Elsewhere	3.000.

The number assigned to this disaster for economic injury is 120930.

The States which received an EIDL Declaration # are North Carolina, Tennessee.

(Catalog of Federal Domestic Assistance Number 59002)

Dated: March 26, 2010.

Karen G. Mills,

Administrator.

[FR Doc. 2010–7780 Filed 4–6–10; 8:45 am]

BILLING CODE 8025–01–P

SMALL BUSINESS ADMINISTRATION

[Disaster Declaration # 12038 and # 12039]

California Disaster # CA–00150

AGENCY: U.S. Small Business Administration.

ACTION: Amendment 1.

SUMMARY: This is an amendment of the Administrative declaration of disaster for the State of California, dated 02/16/2010.

Incident: Severe winter storms, heavy snow, flooding, debris flows and mudslides.

Incident Period: 01/17/2010 through 03/01/2010.

Effective Date: 03/26/2010.

Physical Loan Application Deadline Date: 04/19/2010.

EIDL Loan Application Deadline Date: 11/16/2010.

ADDRESSES: Submit completed loan applications to: U.S. Small Business Administration, Processing and Disbursement Center, 14925 Kingsport Road, Fort Worth, TX 76155.

FOR FURTHER INFORMATION CONTACT: A. Escobar, Office of Disaster Assistance, U.S. Small Business Administration, 409 3rd Street, SW., Suite 6050, Washington, DC 20416.

SUPPLEMENTARY INFORMATION: The notice of the Administrative disaster declaration for the State of California, dated 02/16/2010 is hereby amended to establish the incident period for this disaster as beginning 01/17/2010 and continuing through 03/01/2010.

All other information in the original declaration remains unchanged.

(Catalog of Federal Domestic Assistance Numbers 59002 and 59008)

Dated: March 26, 2010.

Karen G. Mills,

Administrator.

[FR Doc. 2010–7783 Filed 4–6–10; 8:45 am]

BILLING CODE 8025–01–P

SMALL BUSINESS ADMINISTRATION

[Gemini Investors IV, L.P.; License No. 01/01–0410]

Notice Seeking Exemption Under Section 312 of the Small Business Investment Act, Conflicts of Interest

Notice is hereby given that Gemini Investors IV, L.P., 20 William Street, Wellesley, MA 02481, a Federal Licensee under the Small Business Investment Act of 1958, as amended ("the Act"), in connection with the financing of a small concern, has sought an exemption under Section 312 of the Act and Section 107.730, Financings which Constitute Conflicts of Interest of the Small Business Administration ("SBA") Rules and Regulations (13 CFR 107.730). Gemini Investors IV, L.P. proposes to provide equity financing to finance the acquisition of B&H Education, Inc., 501 S. Beverly Drive, Suite 240, Beverly Hills, CA 90212.

The financing is brought within the purview of § 107.730 of the Regulations because Gemini Investors III, L.P., an Associate of Gemini Investors IV, L.P., owns more than ten percent of B&H Education, Inc. Also, the proposed investment by Gemini Investors IV, L.P. will be part of a larger pool of funds to cash out existing shareholders, one of which is its Associate Gemini Investors III, L.P. Lastly, Associates of Gemini Investors IV, L.P. currently serve on the board of directors of B&H Education, Inc.

Therefore, this transaction is considered a financing of an Associate and a self-deal pursuant to 13 CFR 107.730 and requires an exemption. Notice is hereby given that any interested person may submit written comments on the transaction within fifteen days of the date of this publication to Associate Administrator for Investment, U.S. Small Business Administration, 409 Third Street, SW., Washington, DC 20416.

Dated: March 18, 2010.

Sean J. Greene,

Associate Administrator for Investment.

[FR Doc. 2010–7778 Filed 4–6–10; 8:45 am]

BILLING CODE 8025–01–P

SMALL BUSINESS ADMINISTRATION

National Small Business Development Center Advisory Board

AGENCY: U.S. Small Business Administration (SBA).

ACTION: Notice of open Federal Advisory Committee meetings.

SUMMARY: The SBA is issuing this notice to announce the location, date, time and agenda for the first quarter meetings of the National Small Business Development Center (SBDC) Advisory Board.

DATES: The meetings for the fourth quarter will be held on the following dates: Tuesday, April 20, 2010 at 1 p.m. EST, Tuesday, May 18, 2010 at 1 p.m. EST, Tuesday, June 15, 2010 at 1 p.m. EST.

ADDRESSES: These meetings will be held via conference call.

SUPPLEMENTARY INFORMATION: Pursuant to section 10(a) of the Federal Advisory Committee Act (5 U.S.C. Appendix 2), SBA announces the meetings of the National SBDC Advisory Board. This Board provides advice and counsel to the SBA Administrator and Associate Administrator for Small Business Development Centers.

The purpose of these meetings is to discuss the following issues pertaining to the SBDC Advisory Board:

—Summer Site-Visit
—White Paper Issues
—SBA Update
—Member Roundtable

FOR FURTHER INFORMATION CONTACT: The meeting is open to the public, however, advance notice of attendance is requested. Anyone wishing to be a listening participant must contact Alanna Falcone by fax or e-mail. Her contact information is Alanna Falcone, Program Analyst, 409 Third Street, SW., Washington, DC 20416, Phone, 202–619–1612, Fax 202–481–0134, e-mail, *alanna.falcone@sba.gov.*

Additionally, if you need accommodations because of a disability or require additional information, please contact Alanna Falcone at the information above.

Meaghan Burdick,

Acting Committee Management Officer.

[FR Doc. 2010–7798 Filed 4–6–10; 8:45 am]

BILLING CODE P

SMALL BUSINESS ADMINISTRATION

Public Federal Regulatory Enforcement Fairness Hearing; Region III Regulatory Fairness Board

Pursuant to the Federal Advisory Committee Act, 5 U.S.C. Appendix 2, notice is hereby given that the U.S. Small Business Administration (SBA) Region III Regulatory Fairness Board and the SBA Office of the National Ombudsman will hold a National Regulatory Fairness Hearing on Tuesday, May 18, 2010, at 10 a.m. The forum is open to the public and will take place at the Virginia Housing and Development Authority, Virginia Housing Center, 4224 Cox Road, Glen Allen, VA 23060–3318. The purpose of the meeting is for Business Organizations, Trade Associations, Chambers of Commerce and related organizations serving small business concerns to report experiences regarding unfair or excessive Federal regulatory enforcement issues affecting their members.

Anyone wishing to attend or make a presentation must contact James Williams, in writing or by fax, in order to be placed on the agenda. James Williams, Lead Economic Development Specialist, SBA, Richmond District Office, Federal Building, Suite 1150, 400 N. 8th Street, Richmond, VA 23219–4829, phone (804) 771–2400, Ext. 123 and fax (202) 481–2326, e-mail: *James.williams@sba.gov.*

For more information, see our Web site at *http://www.sba.gov/ombudsman.*

Meaghan Burdick,

Deputy Chief of Staff.

[FR Doc. 2010–7799 Filed 4–6–10; 8:45 am]

BILLING CODE P

SECURITIES AND EXCHANGE COMMISSION

[Investment Company Act Release No. 29201; 812–13667]

Medallion Financial Corp.; Notice of Application

April 1, 2010.

AGENCY: Securities and Exchange Commission ("Commission").

ACTION: Notice of an application for an order under section 6(c) of the Investment Company Act of 1940 (the "Act") for an exemption from sections 23(a), 23(b) and 63 of the Act, and under sections 57(a)(4) and 57(i) of the Act and rule 17d–1 under the Act permitting certain joint transactions otherwise prohibited by section 57(a)(4) of the Act.

SUMMARY: *Summary of the Application:* Applicant, Medallion Financial Corp. (the "Company"), requests an order to permit it to issue restricted shares of its common stock to its officers and employees under the terms of its employee compensation plan.

DATES: *Filing Dates:* The application was filed on June 12, 2009, and amended on August 27, 2009, and March 31, 2010.

Hearing or Notification of Hearing: An order granting the application will be issued unless the Commission orders a hearing. Interested persons may request a hearing by writing to the Commission's Secretary and serving applicant with a copy of the request, personally or by mail. Hearing requests should be received by the Commission by 5:30 p.m. on April 23, 2010, and should be accompanied by proof of service on applicant, in the form of an affidavit or, for lawyers, a certificate of service. Hearing requests should state the nature of the writer's interest, the reason for the request, and the issues contested. Persons who wish to be notified of a hearing may request notification by writing to the Commission's Secretary.

ADDRESSES: Secretary, U.S. Securities and Exchange Commission, 100 F Street, NE., Washington, DC 20549–1090. Applicant, 437 Madison Avenue, 38th Floor, New York, NY 10022.

FOR FURTHER INFORMATION CONTACT: Christine Y. Greenlees, Senior Counsel, at (202) 551–6879, or Mary Kay Frech, Branch Chief, at (202) 551–6821, (Division of Investment Management, Office of Investment Company Regulation).

SUPPLEMENTARY INFORMATION: The following is a summary of the application. The complete application may be obtained via the Commission's Web site by searching for the file number, or for an applicant using the Company name box, at *http://www.sec.gov/search/search.htm,* or by calling (202) 551–8090.

Applicant's Representations

1. The Company, a Delaware corporation, is an internally managed, non-diversified, closed-end investment company that has elected to be regulated as a business development company ("BDC") under the Act.[1] The Company is a specialty finance company that has a leading position in originating, acquiring, and servicing loans that finance taxicab medallions and various types of commercial businesses. The Company currently operates its business through three wholly owned consolidated subsidiaries and one wholly owned unconsolidated portfolio company. Shares of the Company's common stock are traded on the NASDAQ Global Select Market under the symbol "TAXI." As of May 5, 2009, there were 17,565,771 shares of the Company's common stock outstanding. As of that date, the Company had 126 employees, including employees of its wholly owned subsidiaries.

2. The Company currently has a nine-member board of directors (the "Board") of whom three are "interested persons" of the Company within the meaning of section 2(a)(19) of the Act and six are not interested persons (the "Non-interested Directors"). The Company has seven directors who are neither officers nor employees of the Company.

3. The Company believes that its successful performance depends on its ability to offer fair compensation packages to its professionals that are competitive with those offered by other investment management businesses. The Company believes that the ability to offer equity-based compensation to its professionals is vital to the Company's future growth and success. The Company wishes to adopt the 2009 Employee Restricted Stock Plan (the "Plan") providing for the periodic issuance of shares of restricted stock (*i.e.,* stock that, at the time of issuance, is subject to certain forfeiture restrictions, and thus is restricted as to its transferability until such forfeiture restrictions have lapsed) (the "Restricted Stock") for its employees and officers, and employees of its wholly owned subsidiaries (each a "Participant," and collectively, the "Participants").

4. The Plan will authorize the issuance of shares of Restricted Stock subject to certain forfeiture restrictions. These restrictions may relate to continued employment, achievement of specified performance objectives, or other restrictions deemed by the Committee (as defined below) to be appropriate.[2] The Restricted Stock will be subject to restrictions on transferability and other restrictions as required by the Committee. Except to the extent restricted under the terms of the Plan, a Participant granted Restricted Stock will have all the rights of any other stockholder, including the right to vote the Restricted Stock and the right to receive dividends. During the restriction period, the Restricted Stock generally may not be sold, transferred, pledged, hypothecated, margined, or otherwise encumbered by the Participant. Except as the Board otherwise determines, upon termination of a Participant's employment or service on the Board during the applicable restriction period, Restricted Stock for which forfeiture restrictions have not lapsed at the time of such termination shall be forfeited.

5. The maximum amount of Restricted Stock that may be issued under the Plan will be 10% of the outstanding shares of common stock of the Company on the effective date of the Plan plus 10% of the number of shares of the Company's common stock issued or delivered by the Company (other than pursuant to compensation plans) during the term of the Plan.[3] The Plan limits the total number of shares that may be awarded to any single Participant in a fiscal year to 200,000 shares. In addition, no Restricted Stock Participant may be granted more than 25% of the shares reserved for issuance under the Plan. The Plan will be administered by the Committee, which, upon approval of the required majority, as defined in section 57(o) of the Act,[4] of the Board, will

[1] The Company was incorporated in Delaware in 1995 and commenced operations on May 29, 1996, in connection with the closing of its initial public offering and simultaneous acquisition of three established finance companies. Section 2(a)(48) defines a BDC to be any closed-end investment company that operates for the purpose of making investments in securities described in sections 55(a)(1) through 55(a)(3) of the Act and makes available significant managerial assistance with respect to the issuers of such securities.

[2] The Compensation Committee of the Board (the "Committee") is comprised solely of the Non-interested Directors.

[3] For purposes of calculating compliance with this limit, the Company will count as Restricted Stock all shares of its common stock that are issued pursuant to the Plan less any shares that are forfeited back to the Company and cancelled as a result of forfeiture restrictions not lapsing.

[4] The term "required majority," when used with respect to the approval of a proposed transaction, plan, or arrangement, means both a majority of a BDC's directors or general partners who have no financial interest in such transaction, plan, or arrangement and a majority of such directors or general partners who are not interested persons of such company.

award shares of Restricted Stock to the Participants from time to time as part of the Participants' compensation based on a Participant's actual or expected performance and value to the Company.

6. Each issuance of Restricted Stock under the Plan will be approved by the required majority, as defined in section 57(o) of the Act, of the Company's directors on the basis that the issuance is in the best interests of the Company and its stockholders. The date on which the required majority approves an issuance of Restricted Stock will be deemed the date on which the subject Restricted Stock is granted.

7. The Plan has been approved by the Committee, as well as the Board, including the required majority as defined in section 57(o) of the Act. The Plan will be submitted for approval to the Company's stockholders, and will become effective upon such approval, subject to and following receipt of the order.

Applicant's Legal Analysis

Sections 23(a) and (b), Section 63

1. Under section 63 of the Act, the provisions of section 23(a) of the Act generally prohibiting a registered closed-end investment company from issuing securities for services or for property other than cash or securities are made applicable to BDCs. This provision would prohibit the issuance of Restricted Stock as a part of the Plan.

2. Section 23(b) generally prohibits a closed-end management investment company from selling its common stock at a price below its current net asset value ("NAV"). Section 63(2) makes section 23(b) applicable to BDCs unless certain conditions are met. Because Restricted Stock that would be granted under the Plan would not meet the terms of section 63(2), sections 23(b) and 63 prohibit the issuance of the Restricted Stock.

3. Section 6(c) provides that the Commission may, by order upon application, conditionally or unconditionally exempt any person, security, or transaction, or any class or classes of persons, securities or transactions, from any provision of the Act, if and to the extent that the exemption is necessary or appropriate in the public interest and consistent with the protection of investors and the purposes fairly intended by the policy and provisions of the Act.

4. The Company requests an order pursuant to section 6(c) of the Act granting an exemption from the provisions of sections 23(a) and (b) and section 63 of the Act.[5] The Company states that the concerns underlying those sections include: (a) Preferential treatment of investment company insiders and the use of options and other rights by insiders to obtain control of the investment company; (b) complication of the investment company's structure that made it difficult to determine the value of the company's shares; and (c) dilution of stockholders' equity in the investment company. The Company states that the Plan does not raise concerns about preferential treatment of the Company's insiders because the Plan is a bona fide compensation plan of the type common among corporations generally. In addition, section 61(a)(3)(B) of the Act permits a BDC to issue to its officers, directors and employees, pursuant to an executive compensation plan, warrants, options and rights to purchase the BDC's voting securities, subject to certain requirements. The Company states that, for reasons that are unclear, section 61 and its legislative history do not address the issuance by a BDC of restricted stock as incentive compensation. The Company states, however, that the issuance of Restricted Stock is substantially similar, for purposes of investor protection under the Act, to the issuance of warrants, options, and rights as contemplated by section 61. The Company also asserts that the Plan would not become a means for insiders to obtain control of the Company because the number of shares of the Company issuable under the Plan would be limited as set forth in the application. Moreover, no individual Restricted Stock Participant could be issued more than 25% of the shares reserved for issuance under the Plan.

5. The Company further states that the Plan will not unduly complicate the Company's structure because equity-based compensation arrangements are widely used among corporations and commonly known to investors. The Company notes that the Plan will be submitted to its stockholders for their approval. The Company represents that a concise, "plain English" description of the Plan, including its potential dilutive effect, will be provided in the proxy materials that will be submitted to the Company's stockholders. The Company also states that it will comply with the proxy disclosure requirements in Item 10 of Schedule 14A under the Securities Exchange Act of 1934 (the "Exchange Act"). The Company further notes that the Plan will be disclosed to investors in accordance with the requirements of the Form N–2 registration statement for closed-end investment companies, and pursuant to the standards and guidelines adopted by the Financial Accounting Standards Board for operating companies. In addition, the Company will comply with the disclosure requirements for executive compensation plans applicable to operating companies under the Exchange Act.[6] The Company thus concludes that the Plan will be adequately disclosed to investors and appropriately reflected in the market value of the Company's shares.

6. The Company acknowledges that, while awards granted under the Plan would have a dilutive effect on the stockholders' equity in the Company, that effect would be outweighed by the anticipated benefits of the Plan to the Company and its stockholders. The Company asserts that it needs the flexibility to provide the requested equity-based employee compensation in order to be able to compete effectively with other financial services firms for talented professionals. These professionals, the Company suggests, in turn are likely to increase the Company's performance and stockholder value. The Company also asserts that equity-based compensation would more closely align the interests of the Company's employees with those of its stockholders. In addition, the Company states that its stockholders will be further protected by the conditions to the requested order that assure continuing oversight of the operation of the Plan by the Company's Board.

Section 57(a)(4), Rule 17d–1

7. Section 57(a) proscribes certain transactions between a BDC and persons related to the BDC in the manner

[5] The Company asks that the order apply also to any future officers and employees of the Company and future employees of the Company's wholly owned subsidiaries that are eligible to receive Restricted Stock under the Plan. Additionally, to the extent that the Company creates or acquires additional wholly owned subsidiaries, and to the extent that such future subsidiaries have employees to whom the relief requested herein would otherwise apply, the Company asks that such relief, if granted, be extended to such employees of any future subsidiaries.

[6] The Company will comply with the amendments to the disclosure requirements for executive and director compensation, related party transactions, director independence and other corporate governance matters, and security ownership of officers and directors to the extent adopted and applicable to BDCs. *See* Executive Compensation and Related Party Disclosure, Securities Act Release No. 8655 (Jan. 27, 2006) (proposed rule); Executive Compensation and Related Party Disclosure, Securities Act Release No. 8732A (Aug. 29, 2006) (final rule and proposed rule), as amended by Executive Compensation Disclosure, Securities Act Release No. 8765 (Dec. 22, 2006) (adopted as interim final rules with request for comments).

described in section 57(b) ("57(b) persons"), absent a Commission order. Section 57(a)(4) generally prohibits a 57(b) person from effecting a transaction in which the BDC is a joint participant absent such an order. Rule 17d–1, made applicable to BDCs by section 57(i), proscribes participation in a "joint enterprise or other joint arrangement or profit-sharing plan," which includes a stock option or purchase plan. Employees and directors of a BDC are 57(b) persons. Thus, the issuance of shares of Restricted Stock could be deemed to involve a joint transaction involving a BDC and a 57(b) person in contravention of section 57(a)(4). Rule 17d–1(b) provides that, in considering relief pursuant to the rule, the Commission will consider (i) whether the participation of the company in a joint enterprise is consistent with the Act's policies and purposes and (ii) the extent to which that participation is on a basis different from or less advantageous than that of other participants.

8. The Company requests an order pursuant to section 57(a)(4) and rule 17d–1 to permit the Plan. The Company states that the Plan, although benefiting the Participants and the Company in different ways, is in the interests of the Company's stockholders because the Plan will help align the interests of the Company's employees and officers with those of its stockholders, which will encourage conduct on the part of those employees and officers designed to produce a better return for the Company's stockholders.

Applicant's Conditions

Applicant agrees that the order granting the requested relief will be subject to the following conditions:

1. The Plan will be authorized by the Company's stockholders.

2. Each issuance of Restricted Stock to a Participant will be approved by the required majority, as defined in section 57(o) of the Act, of the Company's directors on the basis that such issuance is in the best interest of the Company and its stockholders.

3. The amount of voting securities that would result from the exercise of all of the Company's outstanding warrants, options, and rights, together with any Restricted Stock issued pursuant to the Plan, at the time of issuance shall not exceed 25% of the outstanding voting securities of the Company, except that if the amount of voting securities that would result from the exercise of all of the Company's outstanding warrants, options, and rights issued to the Company's directors, officers, and employees, together with any Restricted Stock issued pursuant to the Plan, would exceed 15% of the outstanding voting securities of the Company, then the total amount of voting securities that would result from the exercise of all outstanding warrants, options, and rights, together with any Restricted Stock issued pursuant to the Plan, at the time of issuance shall not exceed 20% of the outstanding voting securities of the Company.

4. The maximum amount of shares of Restricted Stock that may be issued under the Plan will be 10% of the outstanding shares of common stock of the Company on the effective date of the Plan plus 10% of the number of shares of the Company's common stock issued or delivered by the Company (other than pursuant to compensation plans) during the term of the Plan.

5. The Board will review the Plan at least annually. In addition, the Board will review periodically the potential impact that the issuance of Restricted Stock under the Plan could have on the Company's earnings and NAV per share, such review to take place prior to any decisions to grant Restricted Stock under the Plan, but in no event less frequently than annually. Adequate procedures and records will be maintained to permit such review. The Board will be authorized to take appropriate steps to ensure that the grant of Restricted Stock under the Plan would not have an effect contrary to the interests of the Company's stockholders. This authority will include the authority to prevent or limit the granting of additional Restricted Stock under the Plan. All records maintained pursuant to this condition will be subject to examination by the Commission and its staff.

For the Commission, by the Division of Investment Management, under delegated authority.

Florence E. Harmon,

Deputy Secretary.

[FR Doc. 2010–7848 Filed 4–6–10; 8:45 am]

BILLING CODE 8011–01–P

SECURITIES AND EXCHANGE COMMISSION

[Investment Company Act Release No. 29200; File No. 811–21873]

American Vantage Companies; Notice of Application

April 1, 2010.

AGENCY: Securities and Exchange Commission ("Commission").

ACTION: Notice of application for deregistration under section 8(f) of the Investment Company Act of 1940 (the "Act").

Summary of Application: American Vantage Companies requests an order declaring that it has ceased to be an investment company. A notice of application was issued on March 11, 2010 (Investment Company Act Release No. 29174). Applicant subsequently amended the application to state that it had not yet filed its Semi-Annual Report for Registered Investment Companies on Form N–SAR ("Form N–SAR") and its Certified Shareholder Report of Registered Management Investment Companies on Form N–CSR ("Form N–CSR"), each for the reporting period ended December 31, 2009. The amended application states that applicant undertakes to make such filings by January 31, 2011, and adds certain other conditions. This amended notice incorporates the changes in the application made by applicant's amendment.

Applicant: American Vantage Companies (the "Company").

Filing Dates: The application was filed on November 25, 2008 and amended on April 30, 2009, November 12, 2009, February 4, 2010, March 10, 2010 and March 31, 2010.

Hearing or Notification of Hearing: An order granting the requested relief will be issued unless the Commission orders a hearing. Interested persons may request a hearing by writing to the Commission's Secretary and serving applicant with a copy of the request, personally or by mail. Hearing requests should be received by the Commission by 5:30 p.m. on April 26, 2010 and should be accompanied by proof of service on applicant, in the form of an affidavit or, for lawyers, a certificate of service. Hearing requests should state the nature of the writer's interest, the reason for the request, and the issues contested. Persons who wish to be notified of a hearing may request notification by writing to the Commission's Secretary.

ADDRESSES: Secretary, U.S. Securities and Exchange Commission, 100 F Street, NE., Washington, DC 20549–1090. Applicant, P.O. Box 81920, Las Vegas, Nevada 89180.

FOR FURTHER INFORMATION CONTACT: Jaea F. Hahn, Senior Counsel, at (202) 551–6870, or Jennifer L. Sawin, Branch Chief, at (202) 551–6821 (Office of Investment Company Regulation, Division of Investment Management).

SUPPLEMENTARY INFORMATION: The following is a summary of the application. The complete application may be obtained via the Commission's

Web site by searching for the file number, or an applicant using the Company name box, at *http://www.sec.gov/search/search.htm* or by calling (202) 551–8090.

Applicant's Representations

1. The Company is a holding company that operates through its subsidiaries primarily in the gaming and hospitality and corporate staffing businesses. Although the Company was not engaged in the business of investing, reinvesting, owning, holding or trading in securities, the Company registered as a closed-end investment company on June 21, 2006 because it held investment securities that had a value exceeding 40% of the Company's total assets on an unconsolidated basis from March 2005 through March 2006.[1] The Company no longer has investment securities having a value near or exceeding 40% of its total assets nor does it hold itself out as being engaged primarily, nor does it propose in the future to engage primarily, in the business of investing, reinvesting or trading in securities. On March 27, 2008, the Company's board of directors resolved that it would be in the best interest of the Company to deregister from the Act. The Company's stockholders approved a proposal to deregister the Company from the Act on November 14, 2008. The Company seeks an order declaring that it has ceased to be an investment company under the Act.

2. The Company was incorporated in Nevada in 1979 and since then has engaged in the business of recreational and leisure time activities, including casino gaming and hospitality. The Company currently maintains ongoing business operations through its subsidiaries, American Vantage Brownstone, LLC, which focuses on Native American tribal gaming and commercial/jurisdictional gaming, and COD. Despite its registration under the Act, the Company has never represented or stated that it is involved in any business other than gaming, media, restaurants and entertainment and has always emphasized its operating results rather than investment income as a material factor in its business. The Company has never employed an investment advisor nor is there an employee who is specifically assigned to manage the Company's investments.

3. As described more fully in the application, the Company's assets primarily consist of interests in its wholly-owned and majority-owned subsidiaries and a 49% interest in the Border Grill and the Company derives substantially all of its revenues from operations. The Company currently has investment securities that equal approximately 16.4% of its total assets on an unconsolidated basis.[2] For the six months ended June 30, 2009, the Company derived 98.8% of its revenues from its operating subsidiaries. The Company derived only 1.2% of its income from investment assets for the six months ended June 30, 2009.

4. The Company is current in all of its required filings under the federal securities laws, with the exception of its Form N–SAR and Form N–CSR, each for the reporting period ended December 31, 2009, which the Company is currently unable to file as a result of a continuing working capital shortage. The Company undertakes to make such filings by January 31, 2011. After receipt of the requested deregistration order, the Company intends to make all filings required by the Securities Exchange Act of 1934 ("Exchange Act").

Applicant's Legal Analysis

1. Section 8(f) of the Act provides that whenever the Commission, upon application or its own motion, finds that a registered investment company has ceased to be an investment company, the Commission shall so declare by order and upon the taking effect of such order, the registration of such company shall cease to be in effect.

2. Section 3(a)(1)(A) of the Act defines an investment company as any issuer which is or holds itself out as being engaged primarily, or proposes to engage primarily, in the business of investing, reinvesting, or trading in securities. Section 3(a)(1)(C) of the Act defines an investment company as any issuer which is engaged or proposes to engage in the business of investing, reinvesting, owning, holding, or trading in securities, and owns or proposes to acquire investment securities having a value exceeding 40 per centum of the value of such issuer's total assets (exclusive of Government securities and cash items) on an unconsolidated basis. Section 3(a)(2) of the Act defines investment securities as all securities except (A) Government securities, (B) securities issued by employees' securities companies, and (C) securities issued by majority-owned subsidiaries of the owner which (i) are not investment companies, and (ii) are not relying on the exception from the definition of investment company in paragraph (1) or (7) of section 3(c) of the Act.

3. The Company states that it is actively engaged in ongoing business operations in the placement agency, restaurant, gaming and entertainment fields and that it has never been an investment company as defined by section 3(a)(1)(A).[3] Because the Company's investment securities are currently only approximately 16.4% of its total assets, the Company believes that it no longer meets the definition of investment company as defined in section 3(a)(1)(C) of the Act. The Company further states that it intends to manage its assets and any future cash earnings in a manner that will cause the Company to continue to be excluded from the definition of an investment company under the Act. The Company states that after entry of the order requested by the application, it will continue to be a publicly-held company and will continue to be subject to the reporting and other requirements of the Exchange Act. Accordingly, the Company states that it is qualified for an order of the Commission pursuant to section 8(f) of the Act.

Applicant's Conditions

Applicant agrees that the requested order will be subject to the following conditions:

1. The Company will, by January 31, 2011, file Forms N–SAR, N–CSR and any other reports required by the Act for the periods up until it is deregistered under the Act.

2. The Company acknowledges that any order granted pursuant to this application shall be without prejudice to, and shall not limit the Commission's rights in any manner with respect to, any Commission investigation of, or administrative proceedings involving or against Applicants, and the Company may not assert this action as defense in any proceeding initiated by the Commission or any person under the federal securities law of the United States.

[1] These investment securities principally consisted of 7,000,000 shares of common stock, and warrants to purchase 1,400,000 shares of common stock, of Genius Products, Inc. ("Genius") acquired when the Company sold its subsidiary American Vantage Media Corporation to Genius, together with a 49% interest in the Border Grill Restaurant ("Border Grill"). The Company privately placed most of its shares of Genius stock and used the net proceeds for working capital and to fund its purchase in September 2007 of Candidates on Demand Group, Inc. ("COD"), a temporary placement agency and recruitment firm which operates as a wholly-owned subsidiary of the Company.

[2] The Company's investment assets consist of its 49% interest in Border Grill, auction-rate securities, and its remaining Genius common stock and warrants.

[3] The Company also states that none of its subsidiaries can be defined as an investment company for purposes of the Act and none of its subsidiaries is relying on sections 3(c)(1)or 3(c)(7) of the Act.

For the Commission, by the Division of Investment Management, under delegated authority.

Florence E. Harmon,

Deputy Secretary.

[FR Doc. 2010–7847 Filed 4–6–10; 8:45 am]

BILLING CODE 8011–01–P

SECURITIES AND EXCHANGE COMMISSION

[Investment Company Act Release No. 29198; File No. 812–13727]

Pioneer Bond Fund, et al.; Notice of Application

March 31, 2010.

AGENCY: Securities and Exchange Commission ("Commission").

ACTION: Notice of an application under section 6(c) of the Investment Company Act of 1940 ("Act") for an exemption from rule 12d1–2(a) under the Act.

SUMMARY OF APPLICATION: Applicants request an order to permit registered open-end investment companies relying on rule 12d1–2 under the Act to invest in certain financial instruments.

APPLICANTS: Pioneer Bond Fund, Pioneer High Yield Fund, Pioneer Ibbotson Asset Allocation Series, Pioneer Series Trust VI, Pioneer Series Trust VII, Pioneer Short Term Income Fund, Pioneer Strategic Income Fund, Pioneer Variable Contracts Trust (together, the "Trusts") and Pioneer Investment Management, Inc. (the "Adviser").

FILING DATES: The application was filed on December 10, 2009 and amended on March 26, 2010.

HEARING OR NOTIFICATION OF HEARING: An order granting the application will be issued unless the Commission orders a hearing. Interested persons may request a hearing by writing to the Commission's Secretary and serving applicants with a copy of the request, personally or by mail. Hearing requests should be received by the Commission by 5:30 p.m. on April 26, 2010 and should be accompanied by proof of service on applicants, in the form of an affidavit or, for lawyers, a certificate of service. Hearing requests should state the nature of the writer's interest, the reason for the request, and the issues contested. Persons who wish to be notified of a hearing may request notification by writing to the Commission's Secretary.

ADDRESSES: Secretary, U.S. Securities and Exchange Commission, 100 F Street, NE., Washington, DC 20549–1090; Applicants, c/o Dorothy E. Bourassa, Esq., Pioneer Investment Management, Inc., 60 State Street, Boston, Massachusetts 02109–1820.

FOR FURTHER INFORMATION CONTACT: Jill Ehrlich, Attorney Adviser, at (202) 551–6819, or Mary Kay Frech, Branch Chief, at (202) 551–6821 (Division of Investment Management, Office of Investment Company Regulation).

SUPPLEMENTARY INFORMATION: The following is a summary of the application. The complete application may be obtained via the Commission's Web site by searching for the file number, or an applicant using the Company name box, at *http://www.sec.gov/search/search.htm,* or by calling (202) 551–8090.

Applicants' Representations

1. The Trusts are organized as Delaware statutory trusts and are registered under the Act as open-end management investment companies. The Adviser, a Delaware corporation, is a direct, wholly-owned subsidiary of Pioneer Investment Management USA Inc. and is an indirect, wholly-owned subsidiary of Pioneer Global Asset Management S.p.A. and its parent UniCredit S.p.A. The Adviser is registered as an investment adviser under the Investment Advisers Act of 1940. The Adviser serves as the investment adviser to each Applicant Fund (as defined below).

2. Applicants request an exemption from rule 12d1–2(a) under the Act to the extent necessary to permit any existing or future series of the Trusts and any other registered open-end investment company advised by the Adviser or any person controlling, controlled by or under common control with the Adviser that operates, or is permitted to operate, as a "fund of funds" (the "Applicant Funds") and invests, or is permitted to invest, in other registered investment companies in reliance on section 12(d)(1)(G) of the Act, and is also eligible to invest in securities (as defined in section 2(a)(36) of the Act) in reliance on rule 12d1–2 under the Act, to also invest, to the extent consistent with its investment objectives, policies, strategies and limitations, in financial instruments that may not be securities within the meaning of section 2(a)(36) of the Act ("Other Investments").[1]

3. Consistent with its fiduciary obligations under the Act, each Applicant Fund's board of trustees will review the advisory fees charged by the Applicant Fund's investment adviser to ensure that they are based on services provided that are in addition to, rather than duplicative of, services provided pursuant to the advisory agreement of any investment company in which the Applicant Fund may invest.

Applicants' Legal Analysis

1. Section 12(d)(1)(A) of the Act provides that no registered investment company ("acquiring company") may acquire securities of another investment company ("acquired company") if such securities represent more than 3% of the acquired company's outstanding voting stock or more than 5% of the acquiring company's total assets, or if such securities, together with the securities of other investment companies, represent more than 10% of the acquiring company's total assets. Section 12(d)(1)(B) of the Act provides that no registered open-end investment company may sell its securities to another investment company if the sale will cause the acquiring company to own more than 3% of the acquired company's voting stock, or cause more than 10% of the acquired company's voting stock to be owned by investment companies.

2. Section 12(d)(1)(G) of the Act provides that section 12(d)(1) will not apply to securities of an acquired company purchased by an acquiring company if: (i) The acquiring company and acquired company are part of the same group of investment companies; (ii) the acquiring company holds only securities of acquired companies that are part of the same group of investment companies, government securities, and short-term paper; (iii) the aggregate sales loads and distribution-related fees of the acquiring company and the acquired company are not excessive under rules adopted pursuant to section 22(b) or section 22(c) of the Act by a securities association registered under section 15A of the Securities Exchange Act of 1934 or by the Commission; and (iv) the acquired company has a policy that prohibits it from acquiring securities of registered open-end management investment companies or registered unit investment trusts in reliance on section 12(d)(1)(F) or 12(d)(1)(G) of the Act.

3. Rule 12d1–2 under the Act permits a registered open-end investment company or a registered unit investment trust that relies on section 12(d)(1)(G) of the Act to acquire, in addition to securities issued by another registered investment company in the same group of investment companies, government securities, and short-term paper: (1) Securities issued by an investment company that is not in the same group

[1] Every existing entity that currently intends to rely on the requested order is named as an applicant. Any existing or future entity that relies on the order in the future will do so only in accordance with the terms and conditions in the application.

of investment companies, when the acquisition is in reliance on section 12(d)(1)(A) or 12(d)(1)(F) of the Act; (2) securities (other than securities issued by an investment company); and (3) securities issued by a money market fund, when the investment is in reliance on rule 12d1–1 under the Act. For the purposes of rule 12d1–2, "securities" means any security as defined in section 2(a)(36) of the Act.

4. Section 6(c) of the Act provides that the Commission may exempt any person, security, or transaction from any provision of the Act, or from any rule under the Act, if such exemption is necessary or appropriate in the public interest and consistent with the protection of investors and the purposes fairly intended by the policies and provisions of the Act.

5. Applicants state that the proposed arrangement would comply with the provisions of rule 12d1–2 under the Act, but for the fact that the Applicant Funds may invest a portion of their assets in Other Investments. Applicants request an order under section 6(c) of the Act for an exemption from rule 12d1–2(a) to allow the Applicant Funds to invest in Other Investments. Applicants assert that permitting the Applicant Funds to invest in Other Investments as described in the application would not raise any of the concerns that the requirements of section 12(d)(1) were designed to address.

Applicants' Condition

Applicants agree that the order granting the requested relief will be subject to the following condition:

Applicants will comply with all provisions of rule 12d1–2 under the Act, except for paragraph (a)(2) to the extent that it restricts any Applicant Fund from investing in Other Investments as described in the application.

For the Commission, by the Division of Investment Management, pursuant to delegated authority.

Florence E. Harmon,

Deputy Secretary.

[FR Doc. 2010–7846 Filed 4–6–10; 8:45 am]

BILLING CODE 8011–01–P

SECURITIES AND EXCHANGE COMMISSION

[File No. 500–1]

AB Liquidating Corp. (f/k/a Adaptive Broadband Corp.), Globalnet Corp., Greenland Corp., KeraVision, Inc., Lifespan, Inc., STAR Telecommunications, Inc., Telenetics Corp., and 3DFX Interactive, Inc.; Order of Suspension of Trading

April 5, 2010.

It appears to the Securities and Exchange Commission that there is a lack of current and accurate information concerning the securities of AB Liquidating Corp. (f/k/a Adaptive Broadband Corp.) because it has not filed any periodic reports since the period ended December 31, 2000.

It appears to the Securities and Exchange Commission that there is a lack of current and accurate information concerning the securities of Globalnet Corp. because it has not filed any periodic reports since the period ended December 31, 2004.

It appears to the Securities and Exchange Commission that there is a lack of current and accurate information concerning the securities of Greenland Corp. because it has not filed any periodic reports since the period ended September 30, 2005.

It appears to the Securities and Exchange Commission that there is a lack of current and accurate information concerning the securities of KeraVision, Inc. because it has not filed any periodic reports since the period ended September 30, 2000.

It appears to the Securities and Exchange Commission that there is a lack of current and accurate information concerning the securities of Lifespan, Inc. because it has not filed any periodic reports since the period ended September 30, 2007.

It appears to the Securities and Exchange Commission that there is a lack of current and accurate information concerning the securities of STAR Telecommunications, Inc. because it has not filed any periodic reports since the period ended September 30, 2000.

It appears to the Securities and Exchange Commission that there is a lack of current and accurate information concerning the securities of Telenetics Corp. because it has not filed any periodic reports since the period ended September 30, 2004.

It appears to the Securities and Exchange Commission that there is a lack of current and accurate information concerning the securities of 3DFX Interactive, Inc. because it has not filed any periodic reports since the period ended July 31, 2002.

The Commission is of the opinion that the public interest and the protection of investors require a suspension of trading in the securities of the above-listed companies. Therefore, it is ordered, pursuant to Section 12(k) of the Securities Exchange Act of 1934, that trading in the securities of the above-listed companies is suspended for the period from 9:30 a.m. EDT on April 5, 2010, through 11:59 p.m. EDT on April 16, 2010.

By the Commission.

Florence E. Harmon,

Deputy Secretary.

[FR Doc. 2010–7958 Filed 4–5–10; 4:15 pm]

BILLING CODE 8011–01–P

SECURITIES AND EXCHANGE COMMISSION

[Release No. 34–61809; File No. SR–NYSEAmex–2010–29]

Self-Regulatory Organizations; Notice of Filing and Immediate Effectiveness of Proposed Rule Change by NYSE Amex LLC Amending NYSE Amex Equities Rule 1 To Provide for the Designation of Qualified Employees and NYSE Amex Equities Rule 51 To Clarify the Scope of Authority Vested in the Chief Executive Officer

March 31, 2010.

Pursuant to Section 19(b)(1) [1] of the Securities Exchange Act of 1934 (the "Act") [2] and Rule 19b–4 thereunder,[3] notice is hereby given that, on March 25, 2010, NYSE Amex LLC (the "Exchange" or "NYSE Amex") filed with the Securities and Exchange Commission (the "Commission") the proposed rule change as described in Items I and II below, which Items have been prepared by the self-regulatory organization. The Commission is publishing this notice to solicit comments on the proposed rule change from interested persons.

I. Self-Regulatory Organization's Statement of the Terms of Substance of the Proposed Rule Change

The Exchange proposes to amend NYSE Amex Equities Rule 1 ("The Exchange") to provide that the Exchange may formally designate one or more qualified employees to act in place of any person named in a rule as having authority to act under such rule if the named person is not available to administer the rule; and (2) amend

[1] 15 U.S.C. 78s(b)(1).

[2] 15 U.S.C. 78a.

[3] 17 CFR 240.19b–4.

NYSE Amex Equities Rule 51 ("Hours of Business") to clarify the scope of authority vested in the Chief Executive Officer ("CEO") and to make several non-substantive stylistic changes to the rule text. The text of the proposed rule change is available at the Exchange, the Commission's Public Reference Room, *http://www.sec.gov,* and *http://www.nyse.com.*

II. Self-Regulatory Organization's Statement of the Purpose of, and Statutory Basis for, the Proposed Rule Change

In its filing with the Commission, the self-regulatory organization included statements concerning the purpose of, and basis for, the proposed rule change and discussed any comments it received on the proposed rule change. The text of those statements may be examined at the places specified in Item IV below. The Exchange has prepared summaries, set forth in sections A, B, and C below, of the most significant parts of such statements.

A. Self-Regulatory Organization's Statement of the Purpose of, and Statutory Basis for, the Proposed Rule Change

1. Purpose

NYSE Amex, formerly the American Stock Exchange LLC, proposes to amend NYSE Amex Equities Rule 1 to provide that the Exchange may formally designate one or more qualified employees to act in place of any person named in a rule as having authority to act under such rule in the event that the named person is not available. The Exchange believes that providing for such delegations will enable the administration of NYSE Amex Equities rules in a more efficient manner in the event the specified individual is unavailable. Separately, the Exchange proposes to amend NYSE Amex Equities Rule 51 to clarify the scope of authority vested in the Chief Executive Officer ("CEO") to take certain actions when he deems such actions necessary or appropriate for the maintenance of a fair and orderly market, the protection of investors or otherwise in the public interest, due to extraordinary circumstances.

The Exchange notes that parallel changes are proposed to be made to the rules of the New York Stock Exchange LLC.[4]

NYSE Amex Equities Rule 1

NYSE Amex Equities Rule 1 provides that "the Exchange" is defined as NYSE Amex LLC or the officer, employee, person, entity or committee to whom appropriate authority to administer such rule has been delegated by the Exchange.

Additionally, NYSE Amex Equities Rule 1 provides that all references to the "Board," "Board of Directors," "Chairman," "Chairman of the Board," "Chief Executive Officer" and "CEO" refer to those persons and entities of the Exchange. 'NYSE Market' means NYSE Market, Inc., an indirect wholly owned subsidiary of NYSE Euronext and 'NYSER' refers to NYSE Regulation, Inc, an indirect wholly owned subsidiary of NYSE Euronext.

Rule 1 further provides that references to 'Market Surveillance Division' or 'Division of Market Surveillance' or 'Market Surveillance' or 'Regulation & Surveillance' shall be deemed to refer to the Market Surveillance Division of NYSE Regulation, Inc.

Through this filing, the Exchange proposes to amend NYSE Amex Equities Rule 1 to include a provision that the CEO or the Chief Regulatory Officer ("CRO") of the Exchange may formally designate one or more qualified employees of NYSE Euronext to act in place of any person named in a rule as having authority to act under such rule in the event that the named person is not available to administer the rule. For purposes of designation by a CEO, a qualified employee is defined as: (1) Any officer of NYSE Euronext; or (2) any employee of the Exchange that the Board of Directors deems to possess the requisite knowledge and job qualifications to administer that rule.[5]

Additionally, in certain instances, the Exchange's CRO is one of the named persons identified to administer particular NYSE Amex Equities rules. In these situations, a qualified employee of NYSE Regulation, Inc. ("NYSER") may serve as the CRO's designee if the CRO and the Board of Directors of NYSER deem such employee to have the requisite knowledge and job qualifications to administer the rule in place of the CRO. All qualified employees of NYSE Euronext shall be subject to the jurisdictions set forth in Section 7.1 of NYSE Euronext's Amended and Restated Bylaws.[6]

The Exchange believes that it is important that its rules provide for appropriate delegations of authority to ensure business continuity and that all rules can be properly administered even if the specified official is unavailable. The proposed provision applicable to all NYSE Amex Equities rules will enable consistent delegation standards and eliminate any potential for confusion that could result because some rules currently provide for delegation while others do not.

The Exchange has implemented policies and procedures to formally identify the officers and employee [sic] who have been delegated authority to administer a particular rule on behalf of any named person identified in that rule. The Exchange considers the delegation of authority to be a corporate function; accordingly, such formal delegation is subject to approval by the CEO, CRO and Boards of Directors of the Exchange or NYSER, as applicable, as well as compliance with all applicable Bylaws of the Exchange. These delegations of authority are centrally maintained and periodically updated by the Office of General Counsel to remain current with final approval by the CEO of the Exchange or NYSER as applicable.

NYSE Amex Equities Rule 51

NYSE Amex Equities Rule 51 vests the CEO with the powers to suspend or halt trading in any security traded on the Exchange, as well as to close some or all Exchange facilities, if he deems such action to be necessary or appropriate for the maintenance of a fair and orderly market, or the protection of investors, or otherwise in the public interest, due to extraordinary circumstances. "Extraordinary circumstances" are defined in NYSE

[4] *See* SR–NYSE–2010–26.

[5] Rule 46.10 provides that for purposes of Rule 46 only, the term "qualified NYSE Euronext employee" shall mean "employees of NYSE Euronext or any of its subsidiaries, excluding employees of NYSE Regulation, Inc., who shall have satisfied any applicable testing or qualification required by the Exchange for all Floor Governors." That definition shall not be applied to any other NYSE Amex Equities Rule and is separate and distinct from the Rule 1 definition discussed herein.

[6] Article VII, Section 7.1 of the Amended and Restated Bylaws of NYSE Euronext states the following:

Submission to Jurisdiction of U.S. Courts and the SEC. The Corporation, its directors and officers, and those of its employees whose principal place of business and residence is outside of the United States shall be deemed to irrevocably submit to the jurisdiction of the U.S. Federal courts and the SEC for the purposes of any suit, action or proceeding pursuant to the U.S. Federal securities laws and the rules and regulations thereunder, commenced or initiated by the SEC arising out of, or relating to, the activities of the U.S. Regulated Subsidiaries (and shall be deemed to agree that the Corporation may serve as the U.S. agent for purposes of service of process in such suit, action or proceeding), and the Corporation and each such director, officer or employee, in the case of any such director, officer or employee by virtue of his acceptance of any such position, shall be deemed to waive, and agree not to assert by way of motion, as a defense or otherwise in any such suit, action or proceeding, any claims that it or they are not personally subject to the jurisdiction of the SEC, that such suit, action or proceeding is an inconvenient forum or that the venue of such suit, action or proceeding is improper, or that the subject matter thereof may not be enforced in or by such courts or agency.

Amex Equities Rule 51 as "(1) actual or threatened physical danger, severe climatic conditions, civil unrest, terrorism, acts of war, or loss or interruption of facilities utilized by the Exchange, (2) a request by a governmental agency or official, or (3) a period of mourning or recognition for a person or event."

The Exchange proposes to amend NYSE Amex Equities Rule 51 to clarify that the CEO has the authority to extend the hours for the transaction of business on the Exchange and to set a delayed closing time if the CEO deems such action to be necessary or appropriate for the maintenance of a fair and orderly market, or the protection of investors, or otherwise in the public interest, due to extraordinary circumstances. The Exchange has interpreted the CEO's authority to halt securities and determine the length of such halt to include extending the regular closing, in order to ensure that closing trades in securities traded on the Exchange are conducted in a manner consistent with a fair and order market and the protection of investors and the public interest.[7] However, in order to provide appropriate transparency to market participants, the Exchange proposes to clarify and codify the CEO's authority in this regard.

The Exchange also proposes to make several non-substantive changes to the rule text by amending the rule text in Rule 51(a) to conform with proposed Rule 51(b)(ii) and by abbreviating references to "Chief Executive Officer" with "CEO."

2. Statutory Basis

The basis under the Act for the proposed rule change is the requirement under Section 6(b)(5),[8] which requires that an exchange have rules that are designed to foster cooperation and coordination with persons engaged in regulating, clearing, settling, processing information with respect to, and facilitating transactions in securities, to remove impediments to and perfect the mechanism of a free and open market and a national market system and, in general, to protect investors and the public interest. The proposed rule change is consistent with these objectives in that these amendments establish the appropriate Exchange protocols and procedures to administer Exchange rules designed to protect investors and the public interest.

B. Self-Regulatory Organization's Statement on Burden on Competition

The Exchange does not believe that the proposed rule change will impose any burden on competition that is not necessary or appropriate in furtherance of the purposes of the Act.

C. Self-Regulatory Organization's Statement on Comments on the Proposed Rule Change Received From Members, Participants or Others

No written comments were solicited or received with respect to the proposed rule change.

III. Date of Effectiveness of the Proposed Rule Change and Timing for Commission Action

The Exchange has filed the proposed rule change pursuant to Section 19(b)(3)(A)(iii) of the Act[9] and Rule 19b–4(f)(6) thereunder.[10] Because the proposed rule change does not: (i) Significantly affect the protection of investors or the public interest; (ii) impose any significant burden on competition; and (iii) become operative prior to 30 days from the date on which it was filed, or such shorter time as the Commission may designate, if consistent with the protection of investors and the public interest, the proposed rule change has become effective pursuant to Section 19(b)(3)(A) of the Act and Rule 19b–4(f)(6)(iii) thereunder.

At any time within 60 days of the filing of the proposed rule change, the Commission may summarily abrogate such rule change if it appears to the Commission that such action is necessary or appropriate in the public interest, for the protection of investors, or otherwise in furtherance of the purposes of the Act.

IV. Solicitation of Comments

Interested persons are invited to submit written data, views, and arguments concerning the foregoing, including whether the proposed rule change is consistent with the Act. Comments may be submitted by any of the following methods:

Electronic Comments

- Use the Commission's Internet comment form (*http://www.sec.gov/rules/sro.shtml*); or
- Send an e-mail to *rule-comments@sec.gov.* Please include File Number SR–NYSEAmex–2010–29 on the subject line.

Paper Comments

- Send paper comments in triplicate to Elizabeth M. Murphy, Secretary, Securities and Exchange Commission, 100 F Street, NE., Washington, DC 20549–1090.

All submissions should refer to File Number SR–NYSEAmex–2010–29. This file number should be included on the subject line if e-mail is used. To help the Commission process and review your comments more efficiently, please use only one method. The Commission will post all comments on the Commission's Internet Web site (*http://www.sec.gov/rules/sro.shtml*). Copies of the submission, all subsequent amendments, all written statements with respect to the proposed rule change that are filed with the Commission, and all written communications relating to the proposed rule change between the Commission and any person, other than those that may be withheld from the public in accordance with the provisions of 5 U.S.C. 552, will be available for Web site viewing and printing in the Commission's Public Reference Room, 100 F Street, NE., Washington, DC 20549, on official business days between the hours of 10 a.m. and 3 p.m. Copies of such filing also will be available for inspection and copying at the principal office of the Exchange. All comments received will be posted without change; the Commission does not edit personal identifying information from submissions. You should submit only information that you wish to make publicly available. All submissions should refer to File Number SR–NYSEAmex–2010–29 and should be submitted on or before April 28, 2010.

For the Commission, by the Division of Trading and Markets, pursuant to delegated authority.[10]

Florence E. Harmon,

Deputy Secretary.

[FR Doc. 2010–7837 Filed 4–6–10; 8:45 am]

BILLING CODE 8011–01–P

[7] NYSER has previously announced this policy in several Information Memos that were issued in connection with the Russell Reconstitution in June 2008 and June 2009. Those memos described (among other things) the Exchange's various contingency scenarios and procedures, including extending the closing time in the event that a systems malfunction occurs at or near the regular 4:00 p.m. closing time. *See* NYSE Amex Equities Rule 51; *See also* IM 08–30 and IM 09–27. The Exchange has also periodically issued memoranda from its Floor Operations staff, advising of the same contingency scenarios and procedures.

[8] 15 U.S.C. 78f(b)(5).

[9] 15 U.S.C. 78s(b)(3)(A)(iii).

[10] 17 CFR 240.19b–4(f)(6).

[10] 17 CFR 200.30–3(a)(12).

SECURITIES AND EXCHANGE COMMISSION

[Release No. 34–61811; File No. SR–BX–2010–025]

Self-Regulatory Organizations; NASDAQ OMX BX, Inc., Notice of Filing and Immediate Effectiveness of Proposed Rule Change Relating to Permitting Concurrent Listing of $3.50 and $4 Strikes for Classes in the $0.50 Strike and $1 Strike Programs

March 31, 2010.

Pursuant to Section 19(b)(1) of the Securities Exchange Act of 1934 ("Act"),[1] and Rule 19b–4 [2] thereunder, notice is hereby given that on March 30, 2010, NASDAQ OMX BX, Inc. (the "Exchange") filed with the Securities and Exchange Commission ("SEC" or "Commission") the proposed rule change as described in Items I and II below, which Items have been prepared by the Exchange. The Exchange filed the proposed rule change pursuant to Section 19(b)(3)(A) of the Act,[3] and Rule 19b–4(f)(6) thereunder,[4] which renders the proposal effective upon filing with the Commission. The Commission is publishing this notice to solicit comments on the proposed rule change from interested persons.

I. Self-Regulatory Organization's Statement of the Terms of Substance of the Proposed Rule Change

The Exchange proposes to amend Supplementary Material .02 to Section 6 of Chapter IV (Series of Options Open for Trading) of the Rules of the Boston Options Exchange Group, LLC ("BOX") to permit the concurrent listing of $3.50 and $4 strikes for classes that participate in both the $0.50 Strike and $1 Strike Price Programs. The text of the proposed rule change is available from the principal office of the Exchange, at the Commission's Public Reference Room and also on the Exchange's Internet Web site at *http://nasdaqomxbx.cchwallstreet.com/NASDAQOMXBX/Filings/.*

II. Self-Regulatory Organization's Statement of the Purpose of, and Statutory Basis for, the Proposed Rule Change

In its filing with the Commission, the Exchange included statements concerning the purpose of and basis for the proposed rule change and discussed any comments it received on the proposed rule change. The text of these statements may be examined at the places specified in Item IV below. The Exchange has prepared summaries, set forth in Sections A, B, and C below, of the most significant parts of such statements.

A. Self-Regulatory Organization's Statement of the Purpose of, and Statutory Basis for, the Proposed Rule Change

1. Purpose

BOX recently implemented a rule change that permits strike price intervals of $0.50 for options on stocks trading at or below $3.00 ("$0.50 Strike Price Program").[5] As part of the filing to establish the $0.50 Strike Price Program, BOX contemplated that a class may be selected to participate in both the $0.50 Strike Price Program and the $1 Strike Price Program. Under the $1 Strike Price Program, new series with $1 intervals are not permitted to be listed within $0.50 of an existing $2.50 strike price in the same series, except that strike prices of $2 and $3 are permitted to be listed within $0.50 of a $2.50 strike price for classes also selected to participate in the $0.50 Strike Price Program.[6] Under BOX's existing rule, for classes selected to participate in both the $0.50 Strike Price Program and the $1 Strike Price Program, BOX may either: (a) List a $3.50 strike but not list a $4 strike; or (b) list a $4 strike but not list a $3.50 strike. For example, under the BOX's current rules, if a $3.50 strike for an option class in both the $0.50 and $1 Strike Price Programs was listed, the next highest permissible strike price would be $5.00. Alternatively, if a $4 strike was listed, the next lowest permissible strike price would be $3.00. The intent of the $.50 Strike Price Program was to expand the ability of investors to hedge risks associated with stocks trading at or under $3 and to provide finer intervals of $0.50, beginning at $1 up to $3.50. As a result, BOX believes that the current filing is consistent with the purpose of the $0.50 Strike Price Program and will permit BOX to fill in any existing gaps resulting from having to choose whether to list a $3.50 or $4 strike for options classes in both the $0.50 and $1 Strike Price Programs.

Therefore, the Exchange is submitting the current filing to permit the listing of concurrent $3.50 and $4 strikes for classes that are selected to participate in both the $0.50 Strike Price Program and the $1 Strike Price Program. To effect this change, the Exchange is proposing to amend Supplementary Material .02(b) to Section 6 of Chapter IV of the BOX Rules by adding $4 to the strike prices of $2 and $3 currently permitted if a class participates in both the $0.50 Strike Price Program and the $1 Strike Price Program.

The Exchange is also proposing to amend the current rule text to delete references to "$2.50 strike prices" (and the example utilizing $2.50 strike prices) and to replace those references with broader language, e.g., "existing strike prices".

2. Statutory Basis

The Exchange believes that the proposal is consistent with the requirements of Section 6(b) of the Act,[7] in general, and Section 6(b)(5) of the Act,[8] in particular, in that it is designed to foster cooperation and coordination with persons engaged in regulating, clearing, settling, processing information with respect to, and facilitating transactions in securities, to remove impediments to and perfect the mechanism for a free and open market and a national market system and, in general, to protect investors and the public interest. In particular, the Exchange believes that permitting the listing of more granular strikes on options overlying lower priced securities will provide investors with greater flexibility by allowing them to establish positions that are better tailored to meet their investment objectives.

B. Self-Regulatory Organization's Statement on Burden on Competition

The Exchange does not believe that the proposed rule change will impose any burden on competition not necessary or appropriate in furtherance of the purposes of the Act.

C. Self-Regulatory Organization's Statement on Comments on the Proposed Rule Change Received From Members, Participants, or Others

The Exchange has neither solicited nor received comments on the proposed rule change.

III. Date of Effectiveness of the Proposed Rule Change and Timing for Commission Action

Because the foregoing proposed rule change does not significantly affect the protection of investors or the public interest, does not impose any significant burden on competition, and, by its

[1] 15 U.S.C. 78s(b)(1).

[2] 17 CFR 240.19b–4.

[3] 15 U.S.C. 78s(b)(3)(A).

[4] 17 CFR 240.19b–4(f)(6).

[5] *See* Securities Exchange Act Release No. 60814 (October 13, 2009), 74 FR 53535 (October 19, 2009) (SR–BX–2009–063).

[6] *See* Supplementary Material .02(b) to Section 6 of Chapter IV of the BOX Rules.

[7] 15 U.S.C. 78f(b).

[8] 15 U.S.C. 78f(b)(5).

terms, does not become operative for 30 days from the date on which it was filed, or such shorter time as the Commission may designate, it has become effective pursuant to Section 19(b)(3)(A)[9] of the Act and Rule 19b–4(f)(6)[10] thereunder. The Exchange provided the Commission with written notice of its intent to file the proposed rule change, along with a brief description and text of the proposed rule change, at least five business days prior to the date of filing the proposed rule change.

The Exchange has requested that the Commission waive the 30-day operative delay to permit the Exchange to compete with other exchanges whose rules permit concurrent listing of $3.50 and $4 strikes for classes similarly participating in both a $0.50 strike program and a $1 strike program. The Commission finds that waiver of the operative delay is consistent with the protection of investors and the public interest because such waiver will encourage fair competition among the exchanges. Therefore, the Commission designates the proposal operative upon filing.[11]

At any time within 60 days of the filing of the proposed rule change, the Commission may summarily abrogate such rule change if it appears to the Commission that such action is necessary or appropriate in the public interest, for the protection of investors, or otherwise in furtherance of the purposes of the Act.

IV. Solicitation of Comments

Interested persons are invited to submit written data, views, and arguments concerning the foregoing, including whether the proposed rule change is consistent with the Act. Comments may be submitted by any of the following methods:

Electronic Comments

- Use the Commission's Internet comment form (*http://www.sec.gov/rules/sro.shtml*); or
- Send an e-mail to *rule-comments@sec.gov.* Please include File Number SR–BX–2010–025 on the subject line.

Paper Comments

- Send paper comments in triplicate to Elizabeth M. Murphy, Secretary, Securities and Exchange Commission, 100 F Street, NE., Washington, DC 20549–1090.

All submissions should refer to File Number SR–BX–2010–025. This file number should be included on the subject line if e-mail is used. To help the Commission process and review your comments more efficiently, please use only one method. The Commission will post all comments on the Commission's Internet Web site (*http://www.sec.gov/rules/sro.shtml*). Copies of the submission,[12] all subsequent amendments, all written statements with respect to the proposed rule change that are filed with the Commission, and all written communications relating to the proposed rule change between the Commission and any person, other than those that may be withheld from the public in accordance with the provisions of 5 U.S.C. 552, will be available for Web site viewing and printing in the Commission's Public Reference Room, 100 F Street, NE., Washington, DC 20549, on official business days between the hours of 10 a.m. and 3 p.m. Copies of the filing also will be available for inspection and copying at the principal office of the Exchange. All comments received will be posted without change; the Commission does not edit personal identifying information from submissions. You should submit only information that you wish to make available publicly. All submissions should refer to File Number SR–BX–2010–025 and should be submitted on or before April 28, 2010.

For the Commission, by the Division of Trading and Markets, pursuant to delegated authority.[13]

Florence E. Harmon,

Deputy Secretary.

[FR Doc. 2010–7839 Filed 4–6–10; 8:45 am]

BILLING CODE 8011–01–P

[9] 15 U.S.C. 78s(b)(3)(A).

[10] 17 CFR 240.19b–4(f)(6).

[11] For purposes only of waiving the 30-day operative delay, the Commission has considered the proposed rule's impact on efficiency, competition, and capital formation. *See* 15 U.S.C. 78c(f).

[12] The text of the proposed rule change is available on the Commission's Web site at *http://www.sec.gov/.*

[13] 17 CFR 200.30–3(a)(12).

SECURITIES AND EXCHANGE COMMISSION

[Release No. 34–61822; File No. SR–Phlx–2010–47]

Self-Regulatory Organizations; NASDAQ OMX PHLX, Inc.; Notice of Filing and Immediate Effectiveness of a Proposed Rule Change Relating to Amendment of the Fee Schedule

April 1, 2010.

Pursuant to Section 19(b)(1) of the Securities Exchange Act of 1934 ("Act")[1] and Rule 19b–4 thereunder,[2] notice is hereby given that on March 22, 2010, NASDAQ OMX PHLX, Inc. ("Phlx" or "Exchange") filed with the Securities and Exchange Commission ("Commission") the proposed rule change as described in Items I, II and III below, which Items have been prepared by the Exchange. Phlx has designated this proposal as one establishing or changing a member due, fee, or other charge imposed under Section 19(b)(3)(A)(ii) of the Act[3] and Rule 19b–4(f)(2) thereunder,[4] which renders the proposal effective upon filing with the Commission. The Commission is publishing this notice to solicit comments on the proposed rule change from interested persons.

I. Self-Regulatory Organization's Statement of the Terms of Substance of the Proposed Rule Change

The Exchange proposes to amend the Exchange's Fee Schedule to: (i) Increase the number of options to be included in the Exchange's current schedule of transaction fees and rebates for adding and removing liquidity; (ii) increase the Sector Index Options Fees assessed on Registered Options Traders (on-floor) and Specialists from $.30 to $.35 and (iii) make other clarifying technical amendments to the Fee Schedule.

While changes to the Fee Schedule pursuant to this proposal are effective upon filing, the Exchange has designated these changes to be operative for transactions settling on or after April 1, 2010.

The text of the proposed rule change is available on the Exchange's Web site at *http://nasdaqtrader.com/micro.aspx?id=PHLXfilings,* at the principal office of the Exchange, at the Commission's Public Reference Room, and on the Commission's Web site at *http://www.sec.gov.*

II. Self-Regulatory Organization's Statement of the Purpose of, and Statutory Basis for, the Proposed Rule Change

In its filing with the Commission, the Exchange included statements concerning the purpose of and basis for the proposed rule change and discussed any comments it received on the proposed rule change. The text of these statements may be examined at the places specified in Item IV below. The Exchange has prepared summaries, set forth in sections A, B, and C below, of

[1] 15 U.S.C. 78s(b)(1).

[2] 17 CFR 240.19b–4.

[3] 15 U.S.C. 78s(b)(3)(A)(ii).

[4] 17 CFR 240.19b–4(f)(2).

the most significant aspects of such statements.

A. Self-Regulatory Organization's Statement of the Purpose of, and Statutory Basis for, the Proposed Rule Change

1. Purpose

The Exchange proposes to increase liquidity and to attract order flow by increasing the number of options to be included in the Exchange's current schedule of transaction fees and rebates for adding and removing liquidity.

Specifically, the Exchange proposes to add the following options: Alcoa, Inc. ("AA"); American International Group, Inc. ("AIG"); Advanced Micro Devices, Inc. ("AMD"); AMR Corporation ("AMR"); Caterpillar, Inc. ("CAT"); Cisco Systems, Inc. ("CSCO"); Ford Motor Company ("F"); Direxion Daily Financial Bull 3X Shares ("FAS"); Direxion Daily Financial Bear 3X Shares ("FAZ"); SPDR Gold Trust ("GLD"); Intel Corporation ("INTC"); JPMorgan Chase & Co. ("JPM"), Las Vegas Sands Corp. ("LVS"); MGM Mirage ("MGM"); Micron Technology, Inc. ("MU"); Newmont Mining Corporation ("NEM"); Palm, Inc. ("PALM"); Pfizer, Inc. ("PFE"); "); Potash Corp./Saskatchewan, Inc. ("POT"); SanDisk Corporation ("SNDK"); AT&T, Inc. ("T"); UAL Corporation ("UAUA"); Verizon Communications, Inc. ("VZ"), and United States Steel Corporation ("X") collectively ("the options"). The options would be subject to the fees and rebates for adding and removing liquidity.

Currently, the Exchange assesses a per-contract transaction charge in multiple options [5] on five different categories of market participants that submit orders and/or quotes that remove, or "take," liquidity from the Exchange. The per-contract transaction charge depends on the category of market participant submitting an order or quote to the Exchange that removes liquidity.[6]

The market participants are as follows: (i) Specialists, Registered Options Traders ("ROTs"), Streaming Quote Traders ("SQTs") [7] and Remote Streaming Quote Traders ("RSQTs"); [8] (ii) customers; [9] (iii) specialists, SQTs and RSQTs that receive Directed Orders ("Directed Participants" [10] or "Directed Specialists, RSQTs, or SQTs" [11]); (iv) Firms; and (v) broker-dealers.

The per-contract transaction charges are assessed on participants who submit proprietary quotes and/or orders that remove liquidity from the Exchange's market in options listed on the Fee Schedule. The Exchange also assesses a transaction charge to Firms and broker-dealers that add liquidity.

Additionally, the Exchange has in place a per-contract rebate relating to transaction charges for orders or quotations that add liquidity to the Exchange's market in options listed on the fee schedule. The amount of the rebate depends on the category of participant whose order or quote was executed as part of the Phlx disseminated Best Bid and/or Offer.

The Exchange proposes to increase the options transactions charge assessed on Registered Options Traders (on-floor) and Specialists in Sector Index Options from $.30 to $.35. The Exchange believes that the increases are necessary for the Exchange to continue to offset certain costs associated with maintaining the Sector Index Options.

The Exchange also proposes to amend the Fee Schedule to make technical amendments. Specifically, the Exchange proposes to amend a reference in the Payment For Order Flow Fees. Currently, the Payment For Order Flow Fee Schedule states that "QQQQ and other options that are trading in the Penny Pilot Program will be assessed a $.25 per contract fee". The Exchange recently filed a proposed rule change to create transaction fees and rebates for adding and removing liquidity.[12] In that filing, the Exchanged stated that Payment for Order Flow fees will not be collected on transactions for transaction fees and rebates for adding and removing liquidity in certain named symbols. The PowerShares QQQ Trust ("QQQQ")® is among the named symbols to which the transaction fees and rebates for adding and removing liquidity in certain named symbols are applied. Therefore, the Exchange proposes to remove the language referencing QQQQ from the Payment for Order Flow section of the Fee Schedule as that language was inadvertently not removed at the time of filing the aforementioned rule change.

Additionally, the Exchange recently filed a proposed rule change, which among other things, amended endnote 5 to create a reference to the Monthly Firm Cap.[13] That cap is actually referred to as the Firm Related Equity Option Cap in the Equity Options Fees portion of the Fee Schedule where the amount of such cap is defined. The Exchange proposes to amend the Fee Schedule to conform the text in endnote 5 to the remainder of the Fee Schedule by removing the term "Monthly Firm Cap" in endnote 5 and replacing the text with the following corrected text "Firm Related Equity Option Cap".

2. Statutory Basis

The Exchange believes that its proposal to amend its Fee Schedule is consistent with Section 6(b) of the Act [14] in general, and furthers the objectives of Section 6(b)(4) of the Act [15] in particular, in that it is an equitable allocation of reasonable fees and other charges among Exchange members. The Exchange believes that the addition of the options to the fees and rebates for adding and removing liquidity is equitable in that it will apply to all categories of participants in the same

[5] The options that are currently assessed the fees and rebates for adding and removing liquidity are: Standard and Poor's Depositary Receipts/SPDRs ("SPY"); the PowerShares QQQ Trust ("QQQQ")®; Ishares Russell 2000 ("IWM"); Citigroup, Inc. ("C"); Apple, Inc. ("AAPL"); Allstate Corp., ("ALL"); Amazon.com, Inc. ("AMZN"); Bank of America Corporation ("BAC"); Dell, Inc. ("DELL"); Diamonds Trust Series 1 ("DIA"); DryShips, Inc. ("DRYS";, Eastman Kodak, Co. ("EK"); Market Vectors Gold Miners ETF ("GDX"); General Electric Company ("GE"); Goldman Sachs Group, Inc. ("GS"); Microsoft Corporation ("MSFT"); Qualcomm, Inc. ("QCOM"); Research In Motion Ltd. ("RIMM"); Starbucks Corp. ("SBUX"); UltraShort Financials ProShares ("SKF"); iShares Silver Trust ("SLV"); Semiconductor HOLDRs ("SMH"); United States Natural Gas ("UNG"); United States Oil Fund LP Units ("USO";, Ultra Financials ProShares ("UYG"); WynnResorts Ltd. ("WYNN"); and Financial Select Sector SPDR ("XLF").

[6] *See* Securities Exchange Act Release No. 61684 (March 10, 2010), 75 FR 13189 (March 18, 2010) (SR–Phlx–2010–33).

[7] An SQT is an Exchange Registered Options Trader ("ROT") who has received permission from the Exchange to generate and submit option quotations electronically through an electronic interface with AUTOM via an Exchange approved proprietary electronic quoting device in eligible options to which such SQT is assigned. *See* Exchange Rule 1014(b)(ii)(A).

[8] An RSQT is an ROT that is a member or member organization with no physical trading floor presence who has received permission from the Exchange to generate and submit option quotations electronically through AUTOM in eligible options to which such RSQT has been assigned. An RSQT may only submit such quotations electronically from off the floor of the Exchange. *See* Exchange Rule 1014(b)(ii)(B).

[9] This applies to all customer orders, directed and non-directed.

[10] For purposes of this fee, a Directed Participant is a Specialist, SQT, or RSQT that executes a customer order that is directed to them by an Order Flow Provider and is executed electronically on the Exchange's electronic trading platform for options, PHLX XL II.

[11] *See* Exchange Rule 1080(l), "* * * The term 'Directed Specialist, RSQT, or SQT' means a specialist, RSQT, or SQT that receives a Directed Order." A Directed Participant has a higher quoting requirement as compared with a specialist, SQT or RSQT who is not acting as a Directed Participant. *See* Exchange Rule 1014.

[12] *See* Securities Exchange Act Release No. 61684 (March 10, 2010), 75 FR 13189 (March 18, 2010) (SR–Phlx–2010–33).

[13] *See* Securities Exchange Act Release No. 61685 (March 10, 2010), 75 FR 13187 (March 18, 2010) (SR–Phlx–2010–39).

[14] 15 U.S.C. 78f(b).

[15] 15 U.S.C. 78f(b)(4).

manner. The Exchange also believes that increasing the sector index options fees for Registered Options Traders (on-floor) and Specialists is equitable in that it is in the range of other sector index option options transaction sector index fees.

Additionally, the Exchange believes that the clarifying technical amendments will provide further clarity to the Fee Schedule.

B. Self-Regulatory Organization's Statement on Burden on Competition

The Exchange does not believe that the proposed rule change will impose any burden on competition not necessary or appropriate in furtherance of the purposes of the Act.

C. Self-Regulatory Organization's Statement on Comments on the Proposed Rule Change Received From Members, Participants or Others

No written comments were either solicited or received.

III. Date of Effectiveness of the Proposed Rule Change and Timing for Commission Action

The foregoing rule change has become effective pursuant to Section 19(b)(3)(A)(ii) of the Act [16] and paragraph (f)(2) of Rule 19b–4 [17] thereunder. At any time within 60 days of the filing of the proposed rule change, the Commission may summarily abrogate such rule change if it appears to the Commission that such action is necessary or appropriate in the public interest, for the protection of investors, or otherwise in furtherance of the purposes of the Act.

IV. Solicitation of Comments

Interested persons are invited to submit written data, views, and arguments concerning the foregoing, including whether the proposed rule change is consistent with the Act. Comments may be submitted by any of the following methods:

Electronic Comments

- Use the Commission's Internet comment form (*http://www.sec.gov/rules/sro.shtml*); or
- Send an e-mail to *rule-comments@sec.gov.* Please include File Number SR–Phlx–2010–47 on the subject line.

Paper Comments

- Send paper comments in triplicate to Secretary, Securities and Exchange Commission, Station Place, 100 F Street, NE., Washington, DC 20549–1090.

All submissions should refer to File Number SR–Phlx–2010–47. This file number should be included on the subject line if e-mail is used. To help the Commission process and review your comments more efficiently, please use only one method. The Commission will post all comments on the Commission's Internet Web site (*http://www.sec.gov/rules/sro.shtml*). Copies of the submission, all subsequent amendments, all written statements with respect to the proposed rule change that are filed with the Commission, and all written communications relating to the proposed rule change between the Commission and any person, other than those that may be withheld from the public in accordance with the provisions of 5 U.S.C. 552, will be available for Web site viewing and printing in the Commission's Public Reference Room, 100 F Street, NE., Washington, DC 20549, on official business days between the hours of 10 a.m. and 3 p.m. Copies of such filing also will be available for inspection and copying at the principal office of the Exchange. All comments received will be posted without change; the Commission does not edit personal identifying information from submissions. You should submit only information that you wish to make publicly available. All submissions should refer to File Number SR–Phlx–2010–47 and should be submitted on or before April 28, 2010.

For the Commission, by the Division of Trading and Markets, pursuant to delegated authority.[18]

Florence E. Harmon,

Deputy Secretary.

[FR Doc. 2010–7845 Filed 4–6–10; 8:45 am]

BILLING CODE 8011–01–P

[16] 15 U.S.C. 78s(b)(3)(A)(ii).

[17] 17 CFR 240.19b–4(f)(2).

[18] 17 CFR 200.30–3(a)(12).

SECURITIES AND EXCHANGE COMMISSION

[Release No. 34–61820; File No. SR–OCC–2010–05]

Self-Regulatory Organizations; the Options Clearing Corporation; Notice of Filing of Proposed Rule Change Relating to Cash-Settled Foreign Currency Options With One-Cent Exercise Prices

April 1, 2010.

Pursuant to Section 19(b)(1) of the Securities Exchange Act of 1934 ("Act"),[1] notice is hereby given that on March 16, 2010, The Options Clearing Corporation ("OCC") filed with the Securities and Exchange Commission the proposed rule change as described in Items I, II, and III below, which Items have been prepared primarily by OCC. The Commission is publishing this notice to solicit comments on the proposed rule change from interested persons.

I. Self-Regulatory Organization's Statement of the Terms of the Substance of the Proposed Rule Change

The proposed rule change would make clear that cash-settled foreign currency options traded on national securities exchanges will be treated and cleared as securities options notwithstanding that they may have a nominal exercise price such as one cent.

II. Self-Regulatory Organization's Statement of the Purpose of, and Statutory Basis for, the Proposed Rule Change

In its filing with the Commission, OCC included statements concerning the purpose of and basis for the proposed rule change and discussed any comments it received on the proposed rule change. The text of these statements may be examined at the places specified in Item IV below. OCC has prepared summaries, set forth in sections A, B, and C below, of the most significant aspects of such statements.

A. Self-Regulatory Organization's Statement of the Purpose of, and Statutory Basis for, the Proposed Rule Change

In this rule filing, OCC proposes to add a sentence to the Introduction to Article XXII of its By-Laws to make clear that cash-settled foreign currency options traded on national securities exchanges will be treated and cleared as securities options notwithstanding that they may have a nominal exercise price such as one cent.[2] In its capacity as a "derivatives clearing organization" registered as such with the Commodities Futures Trading Commission ("CFTC"), OCC is also filing this proposed rule change with the CFTC for prior approval pursuant to provisions of the Commodity Exchange Act ("CEA") in order to foreclose any potential argument that the clearing by OCC of such options as securities options constitutes a violation of the CEA. The products involved here are essentially the same as cash-settled foreign currency options that OCC currently clears except for the low strike price.

OCC states that the proposed interpretation of OCC's By-Laws is

[1] 15 U.S.C. 78s(b)(1).

[2] The exact language of the proposal can be seen at *http://www.theocc.com/component/docs/legal/rules_and_bylaws/sr_OCC_10_05.pdf.*

consistent with the purposes and requirements of Section 17A of the Act [3] because it is designed to promote the prompt and accurate clearance and settlement of transactions in securities options, to foster cooperation and coordination with persons engaged in the clearance and settlement of such transactions, to remove impediments to and perfect the mechanism of a national system for the prompt and accurate clearance and settlement of such transactions, and, in general, to protect investors and the public interest. OCC believes that the proposed rule change accomplishes these purposes by reducing the likelihood of a dispute as to the Commission's jurisdiction over cash-settled foreign currency options with an exercise price of one cent. OCC also states that the proposed rule change is not inconsistent with the By-Laws and Rules of OCC including those proposed to be amended.

B. Self-Regulatory Organization's Statement on Burden on Competition

OCC does not believe that the proposed rule change would impose any burden on competition.

C. Self-Regulatory Organization's Statement on Comments on the Proposed Rule Change Received From Members, Participants or Others

OCC has not solicited or received written comments relating to the proposed rule change. OCC will notify the Commission of any written comments it receives.

III. Date of Effectiveness of the Proposed Rule Change and Timing for Commission Action

Within thirty-five days of the date of publication of this notice in the **Federal Register** or within such longer period (i) as the Commission may designate up to ninety days of such date if it finds such longer period to be appropriate and publishes its reasons for so finding, or (ii) as to which the self-regulatory organization consents, the Commission will:

(A) By order approve the proposed rule change or

(B) Institute proceedings to determine whether the proposed rule change should be disapproved.

IV. Solicitation of Comments

Interested persons are invited to submit written data, views, and arguments concerning the foregoing, including whether the proposed rule change is consistent with the Act. Comments may be submitted by any of the following methods:

Electronic Comments

- Use the Commission's Internet comment form (*http://www.sec.gov/rules/sro.shtml*); or
- Send an e-mail to *rule-comments@sec.gov.* Please include File No. SR–OCC–2010–05 on the subject line.

Paper Comments

- Send paper comments in triplicate to Elizabeth M. Murphy, Secretary, Securities and Exchange Commission, Station Place, 100 F Street, NE., Washington, DC 20549–1090.

All submissions should refer to File No. SR–OCC–2010–05. This file number should be included on the subject line if e-mail is used. To help the Commission process and review your comments more efficiently, please use only one method. The Commission will post all comments on the Commission's Internet Web site (*http://www.sec.gov/rules/sro.shtml*). Copies of the submission, all subsequent amendments, all written statements with respect to the proposed rule change that are filed with the Commission, and all written communications relating to the proposed rule change between the Commission and any person, other than those that may be withheld from the public in accordance with the provisions of 5 U.S.C 552, will be available for Web site viewing and printing in the Commission's Public Reference Room, 100 F Street, NE., Washington, DC 20549, on official business days between the hours of 10 a.m. and 3 p.m. Copies of such filing also will be available for inspection and copying at OCC's principal office and on OCC's Web site at *http://www.theocc.com/publications/rules/proposed_changes/proposed_changes.jspU.* All comments received will be posted without change; the Commission does not edit personal identifying information from submissions. You should submit only information that you wish to make available publicly. All submissions should refer to File No. SR–OCC–2010–05 and should be submitted on or before April 28, 2010.

For the Commission by the Division of Trading and Markets, pursuant to delegated authority.[4]

Florence E. Harmon,

Deputy Secretary.

[FR Doc. 2010–7844 Filed 4–6–10; 8:45 am]

BILLING CODE 8011–01–P

[3] 15 U.S.C. 78q–1.

[4] 17 CFR 200.30–3(a)(12).

SECURITIES AND EXCHANGE COMMISSION

[Release No. 34–61819; File No. SR–FINRA–2009–061]

Self-Regulatory Organizations; Financial Industry Regulatory Authority, Inc.; Notice of Filing of Amendment No. 2 to a Proposed Rule Change and Order Granting Accelerated Approval to the Proposed Rule Change, as Modified by Amendments Nos. 1 and 2 Thereto, To Require Members To Report OTC Transactions in Equity Securities Within 30 Seconds of Execution

March 31, 2010.

I. Introduction

On September 16, 2009, the Financial Industry Regulatory Authority, Inc. ("FINRA") filed with the Securities and Exchange Commission ("Commission"), pursuant to Section 19(b)(1) of the Securities Exchange Act of 1934 ("Act") [1] and Rule 19b–4 thereunder,[2] a proposed rule change to require members to report OTC transactions in equity securities within 30 seconds of execution. On October 30, 2009, FINRA filed Amendment No. 1 to the proposed rule change. The Commission published the proposed rule change, as amended, for comment in the **Federal Register** on November 17, 2009.[3] The Commission received two comment letters in response to the proposed rule change.[4] On March 22, 2010, FINRA responded to the comment letters and filed Amendment No. 2 to the proposed rule change.[5] This Commission is publishing this notice and order to solicit comments on Amendment No. 2 and to approve the proposed rule change, as

[1] 15 U.S.C. 78s(b)(1).

[2] 17 CFR 240.19b–4.

[3] *See* Securities Exchange Act Release No. 60960 (November 6, 2009), 74 FR 59272 ("Notice").

[4] *See* Letters from James R. Downing, CCO, Cheevers and Company, Inc., received November 12, 2009 ("Cheevers Letter"); and Neal E. Nakagiri, President, CEO, and CCO, NPB Financial Group, LLC, dated November 24, 2009 ("NPB Letter").

[5] *See* Amendment No. 2 dated March 22, 2010 ("Amendment No. 2"). The text of the Amendment No. 2 is available on FINRA's Web site at *http://www.finra.org,* at the principal office of FINRA, and on the Commission's Internet Web site (*http://www.sec.gov/rules/sro.shtml*).

modified by Amendments Nos. 1 and 2, on an accelerated basis.

II. Description of the Amended Proposal

FINRA proposed to amend its trade reporting rules to: (1) Require that members report over-the-counter ("OTC") equity transactions [6] to FINRA within 30 seconds of execution; (2) require that members report secondary market transactions in non-exchange-listed direct participation program ("DPP") [7] securities to FINRA within 30 seconds of execution; (3) require that members report trade cancellations that are subject to the 90-second reporting under current FINRA rules within 30 seconds of the time the trade is canceled; [8] and (4) make certain conforming changes to the rules relating to the OTC Reporting Facility ("ORF").

A. 30-Second Reporting Requirement

Under current FINRA trade reporting rules, members generally must report OTC equity transactions that are executed during the hours that the FINRA Facilities are open within 90 seconds of execution.[9] Last sale information for such trades is publicly disseminated on a real-time basis. For trades executed during normal market hours and canceled at or before 4:00 p.m. on the date of execution, members are required to report the cancelation of the trades within 90 seconds of cancellation.[10] There are certain limited exceptions to this general requirement, including for trades in non-exchange-listed DPP securities, as discussed below.[11]

FINRA proposed to amend the trade reporting rules to require that members report OTC equity transactions to FINRA within 30 seconds of execution. In addition, for trades executed during normal market hours and canceled at or before 4 p.m. on the date of execution, FINRA proposed to amend the trade reporting rules to require that members report cancellations within 30 seconds of cancellation.[12] Specifically, the trade reporting rules would be amended to replace the references to 90 seconds with 30 seconds.[13] Trades not reported within 30 seconds, unless expressly subject to a different reporting requirement or excluded from the trade reporting rules altogether, would be late.[14]

B. Reporting Requirements Applicable to Trades in Non-Exchange-Listed DPP Securities

Pursuant to current FINRA Rule 6643(a)(1), members are required to report trades in non-exchange-listed DPP securities to the ORF by 1:30 p.m. Eastern Time on the next business day (T+1) after the date of execution; members that have the operational capability to report transactions within 90 seconds of execution may do so at their option.[15] By contrast, OTC trades in exchange-listed DPP securities are reported to a TRF or the ADF and are subject to the 90-second reporting requirement (like any other OTC trade in an NMS stock).[16]

FINRA proposed to amend the trade reporting rules to require that transactions in non-exchange-listed DPP securities be reported within 30 seconds of execution to conform to the reporting requirements applicable to other OTC transactions, including OTC transactions in exchange-listed DPP securities. Specifically, FINRA proposed to delete the Rule 6640 Series (Reporting Transactions in Direct Participation Program Securities) in its entirety, so that secondary market transactions in non-exchange-listed DPPs would be reported to FINRA as any other OTC Equity Security pursuant to Rules 6622, 6623, 7310, and 7330 as proposed to be revised.[17] FINRA also proposed to make other changes necessary to implement the new reporting regime applicable to non-exchange listed DPP securities.[18]

C. Proposed Conforming Amendments

In addition to the changes described above, FINRA proposed certain changes to a number of subparagraphs within paragraph (a) of Rule 6622 relating to the ORF to conform, to the extent practicable, to the rules relating to the ADF and TRFs.[19]

In addition to the proposed amendments to Rule 6622, FINRA proposed to amend Rule 6420 to add "normal market hours" and "OTC Reporting Facility Participant" as defined terms.[20]

---

[6] Specifically, OTC equity transactions are: (1) Transactions in NMS stocks, as defined in SEC Rule 600(b) of Regulation NMS, effected otherwise than on an exchange, which are reported through the Alternative Display Facility ("ADF") or a Trade Reporting Facility ("TRF"); and (2) transactions in "OTC Equity Securities," as defined in FINRA Rule 6420 (*e.g.,* OTC Bulletin Board and Pink Sheets securities), which are reported through the OTC Reporting Facility ("ORF"). The ADF, TRFs and ORF are collectively referred to herein as the "FINRA Facilities."

[7] "Direct participation program or DPP, means a program which provides for flow-through tax consequences regardless of the structure of the legal entity or vehicle for distribution including, but not limited to, oil and gas programs, real estate programs, agricultural programs, cattle programs, condominium securities, Subchapter S corporate offerings and all other programs of a similar nature, regardless of the industry represented by the program, or any combination thereof. A program may be composed of one or more legal entities or programs but when used herein, the term shall mean each of the separate entities or programs making up the overall program and/or the overall program itself. Excluded from this definition are real estate investment trusts, tax qualified pension and profit sharing plans pursuant to Sections 401 and 403(a) of the Internal Revenue Code and individual retirement plans under Section 408 of that Code, tax sheltered annuities pursuant to the provisions of Section 403(b) of the Internal Revenue Code, and any company, including separate accounts, registered pursuant to the Investment Company Act of 1940." *See* FINRA Rule 6420, as proposed to be amended.

[8] *See* Amendment No. 2. *See also* Securities Exchange Act Release No. 61359 (January 14, 2010), 75 FR 3772 (January 22, 2010) (approving SR–FINRA–2009–082) ("Cancellations Order"). This new requirement would include trades executed during normal market hours and canceled at or before 4:00 p.m. on the date of execution. *See* FINRA Rules 6282(j), 6380A(g), 6380B(f) and 6622(f).

[9] *See, e.g.,* FINRA Rules 6282(a), 6380A(a), 6380B(a), and 6622(a).

[10] *See, e.g.,* FINRA Rules 6282(j), 6380A(g), 6380B(f) and 6622(f). *See also* Cancellations Order, *supra* note 8.

[11] Additionally, FINRA noted that transactions in PORTAL securities, as defined in FINRA Rule 6631, are not subject to the 90-second reporting requirement, but must be reported to the ORF by the end of the day. *See* FINRA Rule 6633.

[12] *See* note 8, *supra.*

[13] *See* FINRA Rules 6282(a) and (j); 6380A(a) and (g); 6380B(a) and (f); 6622(a) and (f); 7130(b); 7230A(b); 7230B(b); and 7330(b). FINRA also proposed to amend FINRA Rules 6181 and 6623 to replace the reference to 90 seconds with a more general reference to "the required time period" to clarify that these provisions also apply to trades that are subject to a different reporting requirement (*e.g.,* certain trades executed outside normal market hours).

[14] Although members would have 30 seconds to report, FINRA reiterated that—as is the case today—members must report trades as soon as practicable and cannot withhold trade reports, *e.g.,* by programming their systems to delay reporting until the last permissible second.

[15] Transaction information for such trades is not disseminated on a real-time trade-by-trade basis, but is included in end-of-day summary information.

[16] *See* FINRA Rules 6282(a), 6380A(a), and 6380B(a).

[17] *See* Section II.C below.

[18] For a detailed description of these changes *see* Notice, *supra* note 3, at 59273–59274. In the Notice, FINRA noted that transactions in non-exchange-listed DPPs currently are not subject to regulatory transaction fees because they are not subject to prompt last sale reporting under FINRA rules. As a result of the proposed rule change, transactions in non-exchange-listed DPPs would become subject to regulatory transaction fees. *See* Notice, at 59274.

[19] For a detailed description of these changes *see* Notice, *supra* note 3, at 59274. FINRA noted that most of the proposed conforming changes to FINRA Rule 6622(a) are technical in nature; however, some members may need to make systems changes to comply with some of the requirements that are not included expressly in the current rule.

[20] The proposed definition of "normal market hours" is identical to the TRF rules, and the proposed definition of "OTC Reporting Facility Participant" is substantially similar to the definition of "Trade Reporting Facility Participant" in the TRF rules. *See, e.g.,* FINRA Rules 6320A and 6320B.

III. Summary of Comment Letters and FINRA's Response

The Commission received two comment letters on the proposed rule change.[21]

A. 30-Second Reporting Requirement

One commenter raised the following issues related to the proposed 30-second reporting requirement.[22] First, the commenter pointed out that the proposal does not reflect the manual processes many firms have in place when reporting to a TRF, such as using WeblinkACT 2.0, a NASDAQ product which requires the user to type information into a browser based window in order to report transactions. According to the commenter, if the reporting time is changed to 30 seconds "it is plausible that firms using WeblinkACT would have difficulty reporting within 30 seconds."[23] The commenter stated that this places an undue burden on firms with processes that are manual in nature.[24]

In the original filing, FINRA proposed to implement the proposed rule change between six and nine months following the date of Commission approval. In responding to the first comment, FINRA recognized that firms that use a manual process such as WeblinkACT to report trades may have difficulty entering all of the required information within 30 seconds.[25] However, FINRA represented that the number of trades reported in this manner is a tiny fraction of the overall number of trades reported to FINRA on a daily basis, and that the number of firms that use this manual reporting process is small. Moreover, FINRA noted that there are steps that firms using WeblinkACT could take to expedite trade reporting, including, for example, setting defaults to automatically populate certain fields in the trade report or separating the process of reporting for tape purposes from any associated clearing entry (*i.e.,* the submission of additional clearing information may be the reason a firm cannot complete the reporting within 30 seconds). Accordingly, in Amendment No. 2, FINRA proposed to provide an additional six months for member firms that utilize manual trade reporting systems to make the systems changes necessary to comply with the 30-second trade reporting requirement[26]

Second, the commenter noted that the proposed rule change will not materially enhance market transparency and questioned the need for reducing the reporting time given that 99.90% of all trades are already being reported within 30 seconds.[27]

In responding to the second comment, FINRA stated that the original filing cited a number of compelling reasons for the proposed rule change. Additionally, FINRA noted that under the 90-second reporting requirement, market participants have no way of distinguishing among trades reported 30 or 60 or 90 seconds after execution; they all appear on the tape as timely reported trades.[28] FINRA stated that the proposed rule change would provide market participants the certainty that any trade disseminated as timely reported was executed within the previous 30 seconds.

Third, the commenter stated that Qualified Contingent (QCT) trades[29] should be exempt from the 30-second reporting requirement.[30] In responding to the comment, FINRA stated that such trades currently are subject to real-time trade reporting and dissemination, and FINRA does not believe that a blanket exemption is warranted in this instance.[31] FINRA noted, however, that if a firm reports QCT trades via a manual process such as WeblinkACT, it may qualify for the later Phase II implementation date, as discussed above, and have additional time to make necessary systems changes.[32]

Finally, the commenter recommended that FINRA adopt a rule that requires firms to report "as soon as practicable," rather than impose a 30-second reporting requirement, to afford firms with manual processes the ability to remain compliant and to require that automated processes are programmed to report promptly.[33] In responding to the comment, FINRA stated that a bright-line, uniform standard is crucial for surveillance and enforcement purposes, and provides meaningful information to the market.[34]

B. Reporting Requirements Applicable to Trades in Non-Exchange-Listed DPP Securities

The second commenter addressed the proposal relating to the trade reporting of transactions in non-exchange-listed DPPs.[35] The commenter asserted that a 30-second reporting requirement for non-exchange-listed DPPs would be problematic because the time of execution for such trades is not a precise time. The commenter asserted that "there is a lot of paperwork to complete before a 'trade' takes place between a buyer and a seller, and then the transfer itself has to be accepted and completed by the issuer or an agent of the issuer."[36] The commenter further asserted that "[i]f a trade report is required at all, it should be within 24 hours of the 'last act' that is required between the buyer, seller and issuer to ultimately complete the trade."[37]

In responding to the comment, FINRA stated that, as discussed in the original filing, pursuant to current Rule

[21] *See* note 4, *supra.*

[22] *See* Cheevers Letter, *supra* note 4.

[23] *Id.* at 1.

[24] *Id.*

[25] *See* Amendment No. 2, *supra* note 5.

[26] FINRA will phase-in implementation of the 30-second reporting requirement. The implementation date for "Manual Reporting Firms" would be between twelve and fifteen months following the date of Commission approval ("Phase II"). For purposes of Phase II implementation, FINRA defined a "Manual Reporting Firm" as a firm that uses a manual process such as WeblinkACT (or the Nasdaq or ACT workstation) for all, or substantially all, of its trade reporting of OTC trades. Firms with automated processes that on occasion manually report trades would not fall within the scope of this definition and must comply with the Phase I implementation date for all of their trade reporting. In other words, firms with automated trade reporting processes would not qualify for Phase I implementation for some trades and Phase II implementation for other trades. For a detailed description of the steps necessary to qualify as a Manual Reporting Firm, *see* Amendment No. 2, *supra* note 5. For all other firms, the implementation date would be between six and nine months following the date of Commission approval, as proposed in the original filing ("Phase I"). FINRA would announce the implementation dates in a *Regulatory Notice.* The proposed phased-in implementation schedule would apply to the 30-second reporting requirement only. The conforming changes to the rules relating to the ORF that were proposed in the original filing would be implemented for all firms on the Phase I implementation date. Prior to the Phase II implementation date, Manual Reporting Firms would continue to be subject to the current trade reporting requirements, *i.e.,* firms must report as promptly as practicable—and in no event more than 90 seconds—following trade execution. These firms also would continue to be subject to all other reporting time frames under FINRA rules. FINRA also stated that the proposed phased-in implementation schedule would not establish a separate standard for purposes of modifying trade reports as timely versus late. Upon Phase I implementation, all trades reported more than 30 seconds after execution will be modified as late for reporting and dissemination purposes.

[27] *See* Cheevers Letter at 1.

[28] *See* Amendment No. 2, *supra* note 5.

[29] *See* Securities Exchange Act Release No. 54389 (August 31, 2006), 71 FR 52829 (September 7, 2006) (Order Granting an Exemption for Qualified Contingent Trades from Rule 611(a) of Regulation NMS under the Securities Exchange Act of 1934); and Securities Exchange Act Release No. 57620 (April 4, 2008), 73 FR 19271 (April 9, 2008) (Order Modifying the Exemption for Qualified Contingent Trades from Rule 611(a) of Regulation NMS under the Securities Exchange Act of 1934).

[30] *See* Cheevers Letter at 2. The commenter noted that such orders are not exposed to the open marketplace and the reported prices are not indicative of the current available market for the security, therefore their increased timeliness adds little to the transparency of the actionable market.

[31] *See* Amendment No. 2, *supra* note 5.

[32] *Id.*

[33] *See* Cheevers Letter at 2–3.

[34] *See* Amendment No. 2, *supra* note 5.

[35] *See* NPB Letter, *supra* note 4.

[36] *See* NPB Letter at 1.

[37] *Id.*

6643(a)(1), members are required to report trades in non-exchange-listed DPP securities to the ORF by 1:30 p.m. Eastern Time on the next business day (T+1) after the date of execution; members that have the operational capability to report transactions within 90 seconds of execution may do so at their option.[38] The original filing proposed to amend Rule 6622 to include as Supplementary Material the definitions of "date of execution" and "time of execution" for non-exchange-listed DPP transactions.[39] Thus, FINRA stated that under current rules and the proposed rule change, there is no uncertainty as to the time of execution of the trade or the point at which a firm's reporting obligation is triggered. With respect to the commenter's suggestion that a trade report should be required (if at all) within 24 hours of the 'last act' that is required between the buyer, seller and issuer to ultimately complete the trade, FINRA reiterated that under its trade reporting rules, the reporting obligation is triggered upon execution, not settlement, of the trade and the fact that the ultimate transfer of the securities may be contingent on subsequent events or actions of other parties is irrelevant.[40]

IV. Discussion and Commission Findings

After carefully considering the proposal, the comments submitted, and FINRA's response to the comments, the Commission finds that the proposed rule change is consistent with the requirements of the Act and the rules and regulations thereunder applicable to a national securities association.[41] In particular, the Commission finds that the proposed rule change is consistent with Section 15A(b)(6) of the Act,[42] which requires, among other things, that FINRA rules be designed to prevent fraudulent and manipulative acts and practices, to promote just and equitable principles of trade, and, in general, to protect investors and the public interest. The Commission has considered the commenters' view on the proposed rule change and believes that FINRA responded appropriately to the concerns raised. Indeed, the Commission believes that the proposal promotes the goals of transparency, consistency in trade reporting and dissemination, and timely reporting by FINRA members.

Furthermore, the Commission believes that the proposal is consistent with Section 11A(a)(1)(C)(iii) of the Act,[43] which sets forth Congress' finding that it is in the public interest and appropriate for the protection of investors and the maintenance of fair and orderly markets to assure the availability to brokers, dealers, and investors of information with respect to quotations and transactions in securities. The Commission believes that these goals are furthered by the proposed amendments requiring that FINRA members report OTC equity transactions to FINRA within 30 seconds of execution; requiring that members report trade cancellations within 30 seconds of the time the trade is canceled; requiring that members report secondary market transactions in non-exchange-listed DPP securities to FINRA within 30 seconds of execution; and making certain conforming changes to the rules relating to the ORF. The proposed rule change is reasonably designed to accomplish these goals by shortening the time within which FINRA members must report trades from 90 seconds to 30 seconds. As FINRA stated in its proposal, the 90-second reporting requirement has been in effect since 1982, when OTC trading was "more manual in nature." The regulatory landscape has changed substantially in the intervening 28 years and, as trading has become increasingly automated, the vast majority of trades are now reported in a much shorter period of time.[44]

The Commission shares FINRA's belief that the proposed rule change will promote consistent and timely reporting by all members and enhance market transparency and price discovery by ensuring that trades are disseminated closer in time to execution. As FINRA stated in submitting its proposal, timely reporting has become even more critical with the implementation of Regulation NMS. Additionally, the proposed rule change will lessen the ability of members to withhold important market information from investors and other market participants for competitive or other improper reasons.[45] Going forward, the Commission expects FINRA to monitor the effect of this change and to consider the need to lower the time within which trades must be reported even further.

However, one commenter asserted that the proposal places an undue burden on firms with processes that are manual in nature.[46] In response to this comment, in Amendment No. 2, FINRA proposed to provide an additional six months for member firms that utilize manual trade reporting systems to make the systems changes necessary to comply with the 30-second trade reporting requirement.[47]

With respect to FINRA's proposal to amend the trade reporting rules to require that transactions in non-exchange-listed DPP securities be reported within 30 seconds to conform to the reporting requirements applicable to other OTC transactions, including those in exchange-listed DPP securities, the Commission shares FINRA's belief that the inconsistency in the reporting and dissemination of DPPs can create confusion for market participants, especially when an exchange-listed DPP is delisted and dissemination of trading in the security goes from real-time to only twice daily. Therefore, the Commission believes that there is a value in such uniform reporting for DPP securities.

In its filing with the Commission, FINRA stated its belief that the proposed rule change would enhance market transparency and promote consistency in trade reporting and dissemination and that increasing the public availability of information would allow FINRA to obtain a more complete audit trail of transactions in the market and enhance FINRA's ability to oversee its members' compliance with Regulation NMS. Although the Commission acknowledges the potential for firms covered by these new reporting requirements to incur additional compliance burdens and costs, the Commission believes that any such burdens are outweighed by the overall

[38] *See* Notice, *supra* note 3, at 59273.

[39] FINRA stated that the proposed definitions are identical to the definitions in current Rule 6642, and specifically, "time of execution" is defined as the time when the parties to a transaction in a DPP have agreed to all of the essential terms of the transaction, including the price and number of the units to be traded. *See* Amendment No. 2, *supra* note 5.

[40] *See* Amendment No. 2, *supra* note 5. Moreover, FINRA noted that delaying the trade report until a later date when the transfer actually occurs could be confusing to market participants, because intervening events, such as the payment of a distribution or sale of partnership assets, could affect the price or value of the DPP. *See id.*

[41] In approving this proposed rule change, the Commission has considered the proposed rule's impact on efficiency, competition, and capital formation. *See* 15 U.S.C. 78c(f).

[42] 15 U.S.C. 78o–3(b)(6).

[43] 15 U.S.C. 78k–1(a)(1)(C)(iii).

[44] For example, FINRA noted that during the period of February 23 through February 27, 2009, overall member compliance with the current 90-second reporting requirement was 99.95% (for all trades submitted to a FINRA Facility for public dissemination), and 99.90% of trades were reported in 30 seconds or less. *See* Notice, *supra* note 3.

[45] FINRA reiterated the importance of timely reporting and reminds members that a pattern and practice of late reporting may be considered inconsistent with high standards of commercial honor and just and equitable principles of trade in violation of FINRA Rule 2010. *See* Notice, *supra* note 3.

[46] *See* note 24, *supra,* and accompanying text.

[47] *See* notes 25–26, *supra,* and accompanying text.

benefits of increased transparency and access to more comprehensive trade information in the OTC markets.

V. Accelerated Approval

The Commission finds good cause, pursuant to Section 19(b)(2) of the Act,[48] for approving the proposed rule change, as modified by Amendments No. 1 and 2 thereto, prior to the 30th day after the date of publication of Amendment No. 2 in the **Federal Register.** The changes proposed in Amendment No. 2 are minor in nature or respond to specific concerns raised by commenters. In Amendment No. 2, the Exchange proposed to change the requirement to report the cancellation of a trade executed during normal market hours and canceled before 4 p.m. on the date of execution from 90 seconds to 30 seconds in Rule 6282(j)(2)(A).[49] Amendment No. 2 also reflects changes approved in SR–FINRA–2009–082 to the text of Rules 6380A(g)(2)(A), 6380B(f)(2)(A) and 6622(f)(2)(A).[50]

Accordingly, the Commission finds that good cause exists to approve the proposal, as modified by Amendments Nos. 1 and 2, on an accelerated basis.

VI. Solicitation of Comments

Interested persons are invited to submit written data, views, and arguments concerning the foregoing, including whether Amendment No. 2 to the proposed rule change is consistent with the Act. Comments may be submitted by any of the following methods:

Electronic Comments

- Use the Commission's Internet comment form (*http://www.sec.gov/rules/sro.shtml*); or
- Send an e-mail to *rule-comments@sec.gov.* Please include File Number SR–FINRA–2009–061 on the subject line.

Paper Comments

- Send paper comments in triplicate to Elizabeth M. Murphy, Secretary, Securities and Exchange Commission, 100 F Street, NE., Washington DC 20549–1090.

All submissions should refer to File Number SR–FINRA–2009–061. This file number should be included on the subject line if e-mail is used. To help the Commission process and review your comments more efficiently, please use only one method. The Commission will post all comments on the Commission's Internet Web site (*http://www.sec.gov/rules/sro.shtml*). Copies of the submission, all subsequent amendments, all written statements with respect to the proposed rule change that are filed with the Commission, and all written communications relating to the proposed rule change between the Commission and any person, other than those that may be withheld from the public in accordance with the provisions of 5 U.S.C. 552, will be available for Web site viewing and printing in the Commission's Public Reference Room, on official business days between the hours of 10 a.m. and 3 p.m. Copies of the filing will also be available for inspection and copying at the principal office of FINRA.[51] All comments received will be posted without change; the Commission does not edit personal identifying information from submissions. You should submit only information that you wish to make available publicly. All submissions should refer to File No. SR–FINRA–2009–061 and should be submitted on or before April 28, 2010.

VII. Conclusion

It is therefore ordered, pursuant to Section 19(b)(2) of the Act, that the proposed rule change (SR–FINRA–2009–061), as modified by Amendments Nos. 1 and 2, be, and hereby is, approved on an accelerated basis.

For the Commission, by the Division of Trading and Markets, pursuant to delegated authority.[52]

Florence E. Harmon,

Deputy Secretary.

[FR Doc. 2010–7843 Filed 4–6–10; 8:45 am]

BILLING CODE 8011–01–P

[48] 15 U.S.C. 78s(b)(2).

[49] The requirement to report cancellations in 90 seconds was established by SR–FINRA–2009–082. *See* Cancellations Order, *supra* note 8.

[50] *See* Cancellations Order, *supra* note 8.

[51] The text of the proposed rule change, as modified by Amendments Nos. 1 and 2, is available on FINRA's Web site at *http://www.finra.org,* on the Commission's Web site at *http://www.sec.gov,* at FINRA, and at the Commission's Public Reference Room.

[52] 17 CFR 200.30–3(a)(12).

SECURITIES AND EXCHANGE COMMISSION

[Release No. 34–61817; File No. SR–FINRA–2010–011]

Self-Regulatory Organizations; Financial Industry Regulatory Authority, Inc.; Notice of Filing and Immediate Effectiveness of Proposed Rule Change To Modify Certain FINRA/Nasdaq Trade Reporting Facility Fees

March 31, 2010.

Pursuant to Section 19(b)(1) of the Securities Exchange Act of 1934 ("Act") [1] and Rule 19b–4 thereunder,[2] notice is hereby given that on March 12, 2010, Financial Industry Regulatory Authority, Inc. ("FINRA") filed with the Securities and Exchange Commission ("SEC" or "Commission") the proposed rule change as described in Items I, II, and III below, which Items have been prepared by FINRA. FINRA has designated the proposed rule change as "establishing or changing a due, fee or other charge" under Section 19(b)(3)(A)(ii) of the Act [3] and Rule 19b–4(f)(2) thereunder,[4] which renders the proposal effective upon receipt of this filing by the Commission. The Commission is publishing this notice to solicit comments on the proposed rule change from interested persons.

I. Self-Regulatory Organization's Statement of the Terms of Substance of the Proposed Rule Change

FINRA is proposing to amend FINRA Rule 7620A to modify certain fees applicable to members that use the FINRA/Nasdaq Trade Reporting Facility (the "FINRA/Nasdaq TRF").

The text of the proposed rule change is available on FINRA's Web site at *http://www.finra.org,* at the principal office of FINRA and at the Commission's Public Reference Room.

II. Self-Regulatory Organization's Statement of the Purpose of, and Statutory Basis for, the Proposed Rule Change

In its filing with the Commission, FINRA included statements concerning the purpose of and basis for the proposed rule change and discussed any comments it received on the proposed rule change. The text of these statements may be examined at the places specified in Item IV below. FINRA has prepared summaries, set forth in sections A, B, and C below, of the most significant aspects of such statements.

A. Self-Regulatory Organization's Statement of the Purpose of, and Statutory Basis for, the Proposed Rule Change

1. Purpose

Background

The FINRA/Nasdaq TRF is a facility of FINRA that is operated by The NASDAQ OMX Group, Inc. ("NASDAQ OMX") and utilizes Automated Confirmation Transaction ("ACT") Service technology. In connection with the establishment of the FINRA/Nasdaq

[1] 15 U.S.C. 78s(b)(1).

[2] 17 CFR 240.19b–4.

[3] 15 U.S.C. 78s(b)(3)(A)(ii).

[4] 17 CFR 240.19b–4(f)(2).

TRF, FINRA and NASDAQ OMX entered into a limited liability company agreement (the "LLC Agreement"). Under the LLC Agreement, FINRA, the "SRO Member," has sole regulatory responsibility for the FINRA/Nasdaq TRF. NASDAQ OMX, the "Business Member," is primarily responsible for the management of the FINRA/Nasdaq TRF's business affairs, including establishing pricing for use of the FINRA/Nasdaq TRF, to the extent those affairs are not inconsistent with the regulatory and oversight functions of FINRA. Additionally, the Business Member is obligated to pay the cost of regulation and is entitled to the profits and losses, if any, derived from the operation of the FINRA/Nasdaq TRF.

Pursuant to Rule 7620A, FINRA members are charged fees for trade reporting to the FINRA/Nasdaq TRF. The current fee structure for reports of "locked-in trades" (i.e., trades that are not submitted for ACT comparison and do not require specific acceptance by the contra party) is based on (1) the number of reports submitted to the FINRA/Nasdaq TRF in which the member is identified as a party to the trade; (2) whether the transaction is "media" eligible (i.e., the trade report is submitted to FINRA for public dissemination by the Securities Information Processors); [5] (3) whether the trade report is submitted for clearance and settlement related functions; and (4) whether the transaction is in a non-Nasdaq exchange-listed security that is reported to one of the Consolidated Tape Association ("CTA") tapes.[6] Members must pay a fee for reports submitted to the FINRA/Nasdaq TRF with respect to media-eligible locked-in transactions in non-Nasdaq exchange-listed (or CTA) securities. A member that exceeds, in any given month, a daily average of 5,000 media reports in which the member is identified as the reporting party is afforded a cap on its fees equal to $145 ($0.029 multiplied by 5,000) multiplied by the number of trading days in the month. By contrast, there currently is no fee for the submission of locked-in reports for media-eligible transactions in Nasdaq-listed securities.

Proposed Fee Schedule

NASDAQ OMX, as the Business Member, has determined to replace the current fee schedule for reporting "locked-in" trades to the FINRA/Nasdaq TRF with a new fee schedule applicable to "Non-Comparison/Accept (Non-Match/Compare)" trades. Such trades are defined as transactions that are not subject to the ACT comparison process, and they may be submitted as media or non-media, clearing or non-clearing, AGU (automated give-up), QSR (Qualified Service Representative), one-sided and internalized crosses.[7]

Accordingly, FINRA is proposing to amend Rule 7620A to reflect the new fee schedule. Under the proposed schedule, for each media and non-media report submitted to the FINRA/Nasdaq TRF, both the member identified in the report as the "Executing Party (EP)" and the member identified as the "Contra (CP)" will be assessed a fee.[8] Thus, the proposed rule change establishes four categories of fees (Media/Executing Party, Non-Media/Executing Party, Media/Contra and Non-Media/Contra), and each category is applicable to transactions in each of the three Tapes (Tapes A, B and C).[9] A member will be assessed a transaction fee of $0.018 if it is the Executing Party, and $0.013 if it is the Contra, multiplied by the number of same-type reports (i.e., media or non-media) submitted in a given month.

Additionally, the proposed fee schedule includes a cap applicable to each of the four new fee categories based on the average daily volume of reports submitted to a particular Tape. To be eligible for a cap in a particular Tape, a member must achieve a minimum average daily volume of media reports submitted to that Tape as Executing Party in a given month. (The proposed volume threshold for all three Tapes is 2,500.) [10] Thus, the proposed rule change would reduce the per unit fee traditionally assessed (from $0.029 to $0.018 and $0.013, as applicable), as well as the volume threshold required to achieve a fee cap (from 5,000 to 2,500).

Trade reports in which the member appears as the Contra Party do not contribute to achievement of the cap. However, if a member is eligible for a cap based on media trade reports in which it appears as the Executing Party, then caps also would apply to media reports in which that member appears as the Contra Party, as well as to non-media reports where the member appears as Executing Party or Contra Party. Thus, once a member achieves a cap (based on the number of Media/Executing Party reports), under the current proposal, the maximum number of billable trade reports applicable to each fee category is 2,500 for Tape A, B or C. The maximum number of billable Media/Executing Party reports will always be equal to the daily average number of Media/Executing Party trades needed to qualify for a cap for Tape A, B or C, as specified in the Rule. For each of the other three fee categories (Non-Media/Executing Party, Media/Contra and Non-Media/Contra), the maximum number of billable trades also is specified in the Rule and can be adjusted independently of the Media/Executing Party cap.[11] Under the current proposal, if a member is eligible for the fee cap, it will be assessed a maximum fee within each category equal to the category fee (either $0.018 or $0.013) multiplied by 2,500 multiplied by the number of trading days in the month.

The following table provides an example of the fee schedule applicable to a member that is ineligible for a fee cap (based on 22 trading days in the month):

[5] "Non-media" reports are not submitted to FINRA for public dissemination purposes, but are submitted for regulatory and/or clearance and settlement purposes.

[6] Market data is transmitted to three tapes based on the listing venue of the security: New York Stock Exchange securities ("Tape A"), American Stock Exchange and regional exchange securities ("Tape B"), and Nasdaq Stock Market securities ("Tape C"). Tape A and Tape B are generally referred to as the Consolidated Tape.

[7] FINRA is proposing to adopt Supplementary Material in Rule 7260A to define a number of terms used in the proposed fee schedule, including "Non-Comparison/Accept (Non-Match/Compare)" trades.

[8] Pursuant to the proposed Supplementary Material, the "Executing Party (EP)" is defined as the member with the trade reporting obligation under FINRA rules, and the "Contra (CP)" is defined as the member on the contra side of a trade report. These positions formerly were identified in FINRA rules as the "Market Maker" or "MM" side and the "Order Entry" or "OE" side, respectively.

FINRA notes that non-members (non-member broker-dealers and customers) are not assessed fees under FINRA rules.

[9] The four categories of fees are independent of each other and, as such, may be subsequently adjusted individually. Any change to one or more of these categories would be subject to a future proposed rule change by FINRA.

[10] Although the proposed fee schedule includes identical average daily volume thresholds for all three Tapes, the thresholds are independent of each other and, as such, may be subsequently adjusted individually. Any change to one or more of these thresholds would be subject to a future proposed rule change by FINRA.

[11] Any change to one or more of these caps would be subject to a future proposed rule change by FINRA.

NO FEE CAP—TAPE A

Report type/side	Average daily trades	Billable trades	Rate	Cost
Media/EP	2,100	2,100	$0.018	$832
Non-Media/EP	4,000	4,000	0.018	1584
Media/Contra	3,000	3,000	0.013	858
Non-Media/Contra	2,100	2,100	0.013	601
Total	11,200	11,200	.....	3,875

The following table provides an example of the fee schedule applicable to a member that is eligible for a fee cap (based on 22 trading days in the month):

FEE CAP—TAPE A

Report type/side	Average daily trades	Billable trades	Rate	Cost
Media/EP	4,000	2,500	$0.018	$990
Non-Media/EP	4,000	2,500	0.018	990
Media/Contra	4,000	2,500	0.013	715
Non-Media/Contra	4,000	2,500	0.013	715
Total	16,000	10,000	.....	3,410

FINRA notes that the proposed rule change does not propose to modify the other fees assessed under Rule 7620A, specifically: the fee assessed a member for submitting a clearing report to the FINRA/Nasdaq TRF to transfer a transaction fee pursuant to Rule 7230A(h); the "Comparison" fee; the "Late Report—T+N" fee; the "Query" fee; and the "Corrective Transaction Charge."

NASDAQ OMX, as the Business Member, has advised FINRA that it believes that the proposed fee schedule more equitably allocates the fees assessed to members for their use of the FINRA/Nasdaq TRF. Under current Rule 7620A, the fee burden can fall disproportionately on certain parties (e.g., reporting parties submitting media-only reports (with no clearing) of transactions in CTA securities and contra parties to locked-in trades in CTA securities). Under the proposed fee schedule, both members identified as parties to the trade in the trade report will be assessed a fee. In addition, the proposed fee schedule introduces fees for reports of transactions in Nasdaq-listed securities, as well as non-media, non-clearing trade reports, which have historically not been assessed a fee. NASDAQ OMX believes that extending fees for the submission of these reports is consistent with its goal of fairly and equitably distributing the costs associated with the operation and maintenance of the FINRA/Nasdaq TRF. Thus, the proposed fees for the submission of non-comparison trade reports to the FINRA/Nasdaq TRF are spread more equitably across parties (Executing Party and Contra), as well as report type (media and non-media) and security type (Nasdaq-listed and non-Nasdaq exchange-listed). NASDAQ OMX believes that the proposed reduction in fees is appropriate given that the burden of paying for the use of the FINRA/Nasdaq TRF will be shared by all participants across the full range of transactions.

FINRA has filed the proposed rule change for immediate effectiveness. FINRA is proposing that the operative date of the proposed rule change will be April 1, 2010.

2. Statutory Basis

FINRA believes that the proposed rule change is consistent with the provisions of Section 15A(b)(5) of the Act,[12] which requires, among other things, that FINRA rules provide for the equitable allocation of reasonable dues, fees and other charges among members and issuers and other persons using any facility or system that FINRA operates or controls. FINRA believes that the proposed fee schedule is fair and provides an equitable allocation of fees in that it will apply uniformly to all FINRA members that use the FINRA/Nasdaq TRF.

[12] 15 U.S.C. 78*o*–3(b)(5).

B. Self-Regulatory Organization's Statement on Burden on Competition

FINRA does not believe that the proposed rule change will result in any burden on competition that is not necessary or appropriate in furtherance of the purposes of the Act.

C. Self-Regulatory Organization's Statement on Comments on the Proposed Rule Change Received From Members, Participants or Others

No written comments were either solicited or received.

III. Date of Effectiveness of the Proposed Rule Change and Timing for Commission Action

The foregoing rule change has become effective pursuant to Section 19(b)(3)(A)(ii) of the Act [13] and paragraph (f)(2) of Rule 19b–4 thereunder.[14] At any time within 60 days of the filing of the proposed rule change, the Commission may summarily abrogate such rule change if it appears to the Commission that such action is necessary or appropriate in the public interest, for the protection of investors, or otherwise in furtherance of the purposes of the Act.

IV. Solicitation of Comments

Interested persons are invited to submit written data, views, and arguments concerning the foregoing, including whether the proposed rule

[13] 15 U.S.C. 78s(b)(3)(A)(ii).

[14] 17 CFR 240.19b–4(f)(2).

change is consistent with the Act. Comments may be submitted by any of the following methods:

Electronic Comments

- Use the Commission's Internet comment form (*http://www.sec.gov/rules/sro.shtml*); or
- Send an e-mail to *rule-comments@sec.gov.* Please include File Number SR–FINRA–2010–011 on the subject line.

Paper Comments

- Send paper comments in triplicate to Elizabeth M. Murphy, Secretary, Securities and Exchange Commission, 100 F Street, NE., Washington, DC 20549–1090.

All submissions should refer to File Number SR–FINRA–2010–011. This file number should be included on the subject line if e-mail is used. To help the Commission process and review your comments more efficiently, please use only one method. The Commission will post all comments on the Commission's Internet Web site (*http://www.sec.gov/rules/sro.shtml*). Copies of the submission, all subsequent amendments, all written statements with respect to the proposed rule change that are filed with the Commission, and all written communications relating to the proposed rule change between the Commission and any person, other than those that may be withheld from the public in accordance with the provisions of 5 U.S.C. 552, will be available for Web site viewing and printing in the Commission's Public Reference Room on official business days between the hours of 10 a.m. and 3 p.m. Copies of such filing also will be available for inspection and copying at the principal office of FINRA. All comments received will be posted without change; the Commission does not edit personal identifying information from submissions. You should submit only information that you wish to make publicly available. All submissions should refer to File Number SR–FINRA–2010–011 and should be submitted on or before April 28, 2010.

For the Commission, by the Division of Trading and Markets, pursuant to delegated authority.[15]

Florence E. Harmon,

Deputy Secretary.

[FR Doc. 2010–7842 Filed 4–6–10; 8:45 am]

BILLING CODE 8011–01–P

[15] 17 CFR 200.30–3(a)(12).

SECURITIES AND EXCHANGE COMMISSION

[Release No. 34–61815; File No. SR–NYSEAmex–2010–32]

Self-Regulatory Organizations; NYSE Amex LLC; Notice of Filing and Immediate Effectiveness of Proposed Rule Change Extending the Pilot Period To Receive Inbound Routes From Archipelago Securities LLC

March 31, 2010.

Pursuant to Section 19(b)(1)[1] of the Securities Exchange Act of 1934 (the "Act") and Rule 19b–4 thereunder,[2] notice is hereby given that, on March 29, 2010, NYSE Amex LLC ("NYSE Amex" or the "Exchange") filed with the Securities and Exchange Commission (the "Commission") the proposed rule change as described in Items I and II, below, which Items have been prepared by the self-regulatory organization. The Commission is publishing this notice to solicit comments on the proposed rule change from interested persons.

I. Self-Regulatory Organization's Statement of the Terms of Substance of the Proposed Rule Change

The Exchange proposes to extend the pilot period of the Exchange's prior approvals to receive inbound routes of orders from Archipelago Securities LLC ("Arca Securities"), an NYSE Amex affiliated member. A copy of this filing is available on the Exchange's Web site at *http://www.nyse.com,* at the Exchange's principal office and at the Commission's Public Reference Room.

II. Self-Regulatory Organization's Statement of the Purpose of, and Statutory Basis for, the Proposed Rule Change

In its filing with the Commission, the self-regulatory organization included statements concerning the purpose of, and basis for, the proposed rule change and discussed any comments it received on the proposed rule change. The text of those statements may be examined at the places specified in Item IV below. The Exchange has prepared summaries, set forth in sections A, B, and C below, of the most significant parts of such statements.

A. Self-Regulatory Organization's Statement of the Purpose of, and Statutory Basis for, the Proposed Rule Change

1. Purpose

Currently, Arca Securities is the approved outbound order routing facility of the Exchange.[3] Arca Securities is also the approved outbound order routing facility of the New York Stock Exchange ("NYSE") and NYSE Arca, Inc. ("NYSE Arca").[4] The Exchange has also been previously approved to receive inbound routes of orders by Arca Securities in its capacity as an order routing facility of NYSE Arca and the NYSE.[5] The Exchange's authority to receive inbound routes of orders by Arca Securities is subject to a pilot period ending March 31, 2010.[6] The Exchange hereby seeks to extend the previously approved pilot period (with the attendant obligations and conditions) for an additional six months, through September 30, 2010.

2. Statutory Basis

The proposed rule change is consistent with Section 6(b)[7] of the Securities Exchange Act of 1934 (the "Act"), in general, and furthers the objectives of Section 6(b)(5)[8] in particular in that it is designed to prevent fraudulent and manipulative acts and practices, to promote just and equitable principles of trade, to foster cooperation and coordination with persons engaged in facilitating transactions in securities, and to remove impediments to and perfect the mechanism of a free and open market and a national market system. Specifically, the proposed rule change will allow the Exchange to continue receiving inbound routes of equities orders from Arca Securities acting in its

[1] 15 U.S.C. 78s(b)(1).

[2] 17 CFR 240.19b–4.

[3] *See* Securities Exchange Act Release No. 59009 (November 24, 2008), 73 FR 73363 (December 2, 2008) (order approving SR–NYSEALTR–2008–07); *see also,* Securities Exchange Act Release No. 59473 (February 27, 2009) 74 FR 9853 (March 6, 2009) (order approving SR–NYSEALTR–2009–18).

[4] *See* Securities Exchange Act Release No. 55590 (April 5, 2007), 72 FR 18707 (April 13, 2007) (notice of immediate effectiveness of SR–NYSE–2007–29); *see also,* Securities Exchange Act Release No. 58680 (September 29, 2008), 73 FR 58283 (October 6, 2008) (order approving SR–NYSE–2008–76). *See* Securities Exchange Act Release No. 53238 (July 28, 2006), 71 FR 44758 (August 7, 2006) (order approving SR–NYSEArca–2006–13); *see also,* Securities Exchange Act Release No. 52497 (September 22, 2005), 70 FR 56949 (September 29, 2005) (SR–PCX–2005–90); *see also,* Securities Exchange Act Release No. 44983 (October 25, 2001), 66 FR 55225 (November 1, 2001) (SR–PCX–00–25); *see also,* Securities Exchange Act Release No. 58681 (September 29, 2008), 73 FR 58285 (October 6, 2008) (order approving NYSEArca–2008–90).

[5] *See* Securities Exchange Act Release No. 58673 (September 29, 2008), 73 FR 57707 (October 3, 2008) (order approving SR–Amex–2008–62). *See also,* Securities Exchange Act Release No. 58705 (October 1, 2008), 73 FR 58995 (October 8, 2008) (order approving SR–AMEX–2008–63).

[6] *See* Securities Exchange Act Release No. 61269 (December 31, 2009), 75 FR 1097 (January 8, 2010) (notice of immediate effectiveness of SR–NYSEAmex–2009–91).

[7] 15 U.S.C. 78f(b).

[8] 15 U.S.C. 78f(b)(5).

capacity as a facility of the NYSE and NYSE Arca, in a manner consistent with prior approvals and established protections. The Exchange believes that extending the previously approved pilot period for six months will permit both the Exchange and the Commission to further assess the impact of the Exchange's authority to receive direct inbound routes of equities orders via Arca Securities (including the attendant obligations and conditions).[9]

B. Self-Regulatory Organization's Statement on Burden on Competition

The Exchange does not believe that the proposed rule change will impose any burden on competition that is not necessary or appropriate in furtherance of the purposes of the Act.

C. Self-Regulatory Organization's Statement on Comments on the Proposed Rule Change Received From Members, Participants, or Others

No written comments were solicited or received with respect to the proposed rule change.

III. Date of Effectiveness of the Proposed Rule Change and Timing for Commission Action

Because the foregoing rule change does not: (1) Significantly affect the protection of investors or the public interest; (2) impose any significant burden on competition; and (3) become operative for 30 days after the date of this filing, or such shorter time as the Commission may designate, it has become effective pursuant to Section 19(b)(3)(A) of the Act[10] and Rule 19b–4(f)(6) thereunder.[11]

A proposed rule change filed under 19b–4(f)(6) normally may not become operative prior to 30 days after the date of filing.[12] However, Rule 19b–4(f)(6)(iii)[13] permits the Commission to designate a shorter time if such action is consistent with the protection of investors and the public interest. The Exchange has requested that the Commission waive the 30-day operative delay. The Exchange notes that the proposal will allow the Exchange to continue receiving inbound routes of equities orders from Arca Securities, in a manner consistent with prior approvals and established protections, while also permitting the Exchange and the Commission to assess the impact of the pilot.[14] The Commission believes that waiving the 30-day operative delay is consistent with the protection of investors and the public interest because such waiver would allow the pilot period to be extended without interruption through September 30, 2010. For this reason, the Commission designates the proposed rule change to be operative upon filing with the Commission.[15]

At any time within 60 days of the filing of such proposed rule change the Commission may summarily abrogate such rule change if it appears to the Commission that such action is necessary or appropriate in the public interest, for the protection of investors or otherwise in furtherance of the purposes of the Act.

IV. Solicitation of Comments

Interested persons are invited to submit written data, views, and arguments concerning the foregoing, including whether the proposed rule change is consistent with the Act. Comments may be submitted by any of the following methods:

Electronic Comments

- Use the Commission's Internet comment form (*http://www.sec.gov/rules/sro.shtml*); or
- Send an e-mail to *rule-comments@sec.gov.* Please include File Number SR–NYSEAmex–2010–32 on the subject line.

Paper Comments

- Send paper comments in triplicate to Elizabeth M. Murphy, Secretary, Securities and Exchange Commission, 100 F Street, NE., Washington, DC 20549–1090.

All submissions should refer to File Number SR–NYSEAmex–2010–32. This file number should be included on the subject line if e-mail is used. To help the Commission process and review your comments more efficiently, please use only one method. The Commission will post all comments on the Commission's Internet Web site (*http://www.sec.gov/rules/sro.shtml*). Copies of the submission, all subsequent amendments, all written statements with respect to the proposed rule change that are filed with the Commission, and all written communications relating to the proposed rule change between the Commission and any person, other than those that may be withheld from the public in accordance with the provisions of 5 U.S.C. 552, will be available for inspection and copying in the Commission's Public Reference Room on official business days between the hours of 10 a.m. and 3 p.m. Copies of such filing also will be available for inspection and copying at the principal office of the Exchange. All comments received will be posted without change; the Commission does not edit personal identifying information from submissions. You should submit only information that you wish to make available publicly. All submissions should refer to File Number SR–NYSEAmex–2010–32 and should be submitted on or before April 28, 2010.

For the Commission, by the Division of Trading and Markets, pursuant to delegated authority.[16]

Florence E. Harmon,

Deputy Secretary.

[FR Doc. 2010–7841 Filed 4–6–10; 8:45 am]

BILLING CODE 8011–01–P

[9] The Exchange is currently analyzing the condition regarding non-public information and system changes in order to better reflect the operation of Arca Securities.

[10] 15 U.S.C. 78s(b)(3)(A).

[11] 17 CFR 240.19b–4(f)(6).

[12] 17 CFR 240.19b–4(f)(6)(iii). In addition, Rule 19b–4(f)(6)(iii) requires that a self-regulatory organization submit to the Commission written notice of its intent to file the proposed rule change, along with a brief description and text of the proposed rule change, at least five business days prior to the date of filing of the proposed rule change, or such shorter time as designated by the Commission. The Exchange has satisfied this requirement.

[13] *Id.*

[14] *See supra* note 9 and accompanying text.

[15] For the purposes only of waiving the 30-day operative delay, the Commission has considered the proposed rule's impact on efficiency, competition, and capital formation. *See* 15 U.S.C. 78c(f).

[16] 17 CFR 200.30–3(a)(12).

SECURITIES AND EXCHANGE COMMISSION

[Release No. 34–61814; File No. SR–NYSE–2010–27]

Self-Regulatory Organizations; New York Stock Exchange LLC; Notice of Filing and Immediate Effectiveness of Proposed Rule Change Extending the Pilot Period To Receive Inbound Routes of Certain Equities Orders From Archipelago Securities LLC

March 31, 2010.

Pursuant to Section 19(b)(1)[1] of the Securities Exchange Act of 1934 (the "Act") and Rule 19b–4 thereunder,[2] notice is hereby given that, on March 29, 2010, New York Stock Exchange LLC ("NYSE" or the "Exchange") filed with the Securities and Exchange Commission (the "Commission") the proposed rule change as described in Items I and II, below, which Items have been prepared by the self-regulatory organization. The Commission is publishing this notice to solicit comments on the proposed rule change from interested persons.

[1] 15 U.S.C. 78s(b)(1).

[2] 17 CFR 240.19b–4.

I. Self-Regulatory Organization's Statement of the Terms of Substance of the Proposed Rule Change

The Exchange proposes to extend the pilot period of the Exchange's prior approvals to receive inbound routes of certain equities orders from Archipelago Securities LLC ("Arca Securities"), an NYSE affiliated member. The text of the proposed rule change is available at the Exchange, the Commission's Public Reference Room, and *http://www.nyse.com.*

II. Self-Regulatory Organization's Statement of the Purpose of, and Statutory Basis for, the Proposed Rule Change

In its filing with the Commission, the self-regulatory organization included statements concerning the purpose of, and basis for, the proposed rule change and discussed any comments it received on the proposed rule change. The text of those statements may be examined at the places specified in Item IV below. The Exchange has prepared summaries, set forth in sections A, B, and C below, of the most significant parts of such statements.

A. Self-Regulatory Organization's Statement of the Purpose of, and Statutory Basis for, the Proposed Rule Change

1. Purpose

Currently, Arca Securities is the approved outbound order routing facility of the Exchange.[3] Arca Securities is also the approved outbound order routing facility of NYSE Arca and NYSE Amex LLC ("NYSE Amex").[4] The Exchange has also been previously approved to receive inbound routes of equities orders by Arca Securities in its capacity as an order routing facility of NYSE Arca and NYSE Amex.[5] The Exchange's authority to receive inbound routes of equities orders by Arca Securities is subject to a pilot period ending March 31, 2010.[6] The Exchange hereby seeks to extend the previously approved pilot period (with the attendant obligations and conditions) for an additional six months, through September 30, 2010.

2. Statutory Basis

The proposed rule change is consistent with Section 6(b)[7] of the Securities Exchange Act of 1934 (the "Act"), in general, and furthers the objectives of Section 6(b)(5)[8] in particular in that it is designed to prevent fraudulent and manipulative acts and practices, to promote just and equitable principles of trade, to foster cooperation and coordination with persons engaged in facilitating transactions in securities, and to remove impediments to and perfect the mechanism of a free and open market and a national market system. Specifically, the proposed rule change will allow the Exchange to continue receiving inbound routes of equities orders from Arca Securities acting in its capacity as a facility of the NYSE Arca and NYSE Amex, in a manner consistent with prior approvals and established protections. The Exchange believes that extending the previously approved pilot period for six months will permit both the Exchange and the Commission to further assess the impact of the Exchange's authority to receive direct inbound routes of equities orders via Arca Securities (including the attendant obligations and conditions).[9]

B. Self-Regulatory Organization's Statement on Burden on Competition

The Exchange does not believe that the proposed rule change will impose any burden on competition that is not necessary or appropriate in furtherance of the purposes of the Act.

C. Self-Regulatory Organization's Statement on Comments on the Proposed Rule Change Received From Members, Participants, or Others

No written comments were solicited or received with respect to the proposed rule change.

III. Date of Effectiveness of the Proposed Rule Change and Timing for Commission Action

Because the foregoing rule change does not: (1) Significantly affect the protection of investors or the public interest; (2) impose any significant burden on competition; and (3) become operative for 30 days after the date of this filing, or such shorter time as the Commission may designate, it has become effective pursuant to Section 19(b)(3)(A) of the Act[10] and Rule 19b–4(f)(6) thereunder.[11]

A proposed rule change filed under 19b–4(f)(6) normally may not become operative prior to 30 days after the date of filing.[12] However, Rule 19b–4(f)(6)(iii)[13] permits the Commission to designate a shorter time if such action is consistent with the protection of investors and the public interest. The Exchange has requested that the Commission waive the 30-day operative delay. The Exchange notes that the proposal will allow the Exchange to continue receiving inbound routes of equities orders from Arca Securities, in a manner consistent with prior approvals and established protections, while also permitting the Exchange and the Commission to assess the impact of the pilot.[14] The Commission believes that waiving the 30-day operative delay is consistent with the protection of investors and the public interest because such waiver would allow the pilot period to be extended without interruption through September 30, 2010. For this reason, the Commission designates the proposed rule change to be operative upon filing with the Commission.[15]

At any time within 60 days of the filing of such proposed rule change the

[3] *See* Securities Exchange Act Release No. 55590 (April 5, 2007), 72 FR 18707 (April 13, 2007) (notice of immediate effectiveness of SR–NYSE–2007–29); *see also,* Securities and [sic] Exchange Act Release No. 58680 (September 29, 2008), 73 FR 58283 (October 6, 2008) (order approving SR–NYSE–2008–76).

[4] *See* Securities Exchange Act Release No. 53238 (July 28, 2006), 71 FR 44758 (August 7, 2006) (order approving SR–NYSEArca–2006–13); *see also,* Securities Exchange Act Release No. 52497 (September 22, 2005), 70 FR 56949 (September 29, 2005) (SR–PCX–2005–90); *see also,* Securities Exchange Act Release No. 44983 (October 25, 2001), 66 FR 55225 (November 1, 2001) (SR–PCX–00–25); *see also,* Securities Exchange Act Release No. 58681 (September 29, 2008), 73 FR 58285 (October 6, 2008) (order approving NYSEArca–2008–90). *See* Securities Exchange Act Release No. 59009 (November 24, 2008), 73 FR 73363 (December 2, 2008) (order approving SR–NYSEALTR–2008–07); *see also,* Securities Exchange Act Release No. 59473 (February 27, 2009), 74 FR 9853 (March 6, 2009) (order approving SR–NYSEALTR–2009–18).

[5] *See* Securities and [sic] Exchange Act Release No. 58680 (September 29, 2008), 73 FR 58283 (October 6, 2008) (order approving SR–NYSE–2008–76); *see* Securities Exchange Act Release No. 59011 (November 24, 2008) 73 FR 73360 (December 2, 2008) (order approving SR–NYSE–2008–122); *see also* Securities Exchange Act Release No. 60255 (July 7, 2009) 74 FR 34065 (July 14, 2009) (order approving SR–NYSE–2009–58).

[6] *See* Securities Exchange Act Release No. 61268 (December 31, 2009), 75 FR 1104 (January 8, 2010) (notice of immediate effectiveness of SR–NYSE–2009–128).

[7] 15 U.S.C. 78f(b).

[8] 15 U.S.C. 78f(b)(5).

[9] The Exchange is currently analyzing the condition regarding non-public information and system changes in order to better reflect the operation of Arca Securities.

[10] 15 U.S.C. 78s(b)(3)(A).

[11] 17 CFR 240.19b–4(f)(6).

[12] 17 CFR 240.19b–4(f)(6)(iii). In addition, Rule 19b–4(f)(6)(iii) requires that a self-regulatory organization submit to the Commission written notice of its intent to file the proposed rule change, along with a brief description and text of the proposed rule change, at least five business days prior to the date of filing of the proposed rule change, or such shorter time as designated by the Commission. The Exchange has satisfied this requirement.

[13] *Id.*

[14] *See supra* note 9 and accompanying text.

[15] For the purposes only of waiving the 30-day operative delay, the Commission has considered the proposed rule's impact on efficiency, competition, and capital formation. *See* 15 U.S.C. 78c(f).

Commission may summarily abrogate such rule change if it appears to the Commission that such action is necessary or appropriate in the public interest, for the protection of investors or otherwise in furtherance of the purposes of the Act.

IV. Solicitation of Comments

Interested persons are invited to submit written data, views, and arguments concerning the foregoing, including whether the proposed rule change is consistent with the Act. Comments may be submitted by any of the following methods:

Electronic Comments

- Use the Commission's Internet comment form (*http://www.sec.gov/rules/sro.shtml*); or
- Send an e-mail to *rule-comments@sec.gov*. Please include File Number SR–NYSE–2010–27 on the subject line.

Paper Comments

- Send paper comments in triplicate to Elizabeth M. Murphy, Secretary, Securities and Exchange Commission, 100 F Street, NE., Washington, DC 20549–1090.

All submissions should refer to File Number SR–NYSE–2010–27. This file number should be included on the subject line if e-mail is used. To help the Commission process and review your comments more efficiently, please use only one method. The Commission will post all comments on the Commission's Internet Web site (*http://www.sec.gov/rules/sro.shtml*). Copies of the submission, all subsequent amendments, all written statements with respect to the proposed rule change that are filed with the Commission, and all written communications relating to the proposed rule change between the Commission and any person, other than those that may be withheld from the public in accordance with the provisions of 5 U.S.C. 552, will be available for inspection and copying in the Commission's Public Reference Room on official business days between the hours of 10 a.m. and 3 p.m. Copies of such filing also will be available for inspection and copying at the principal office of the Exchange. All comments received will be posted without change; the Commission does not edit personal identifying information from submissions. You should submit only information that you wish to make available publicly. All submissions should refer to File Number SR–NYSE–2010–27 and should be submitted on or before April 28, 2010.

For the Commission, by the Division of Trading and Markets, pursuant to delegated authority.[16]

Florence E. Harmon,

Deputy Secretary.

[FR Doc. 2010–7840 Filed 4–6–10; 8:45 am]

BILLING CODE 8011–01–P

SECURITIES AND EXCHANGE COMMISSION

[Release No. 34–61810; File No. SR–NYSE–2010–26]

Self-Regulatory Organizations; Notice of Filing and Immediate Effectiveness of Proposed Rule Change by New York Stock Exchange LLC Amending NYSE Rule 1 To Provide for the Designation of Qualified Employees and NYSE Rule 51 To Clarify the Scope of Authority Vested in the Chief Executive Officer

March 31, 2010.

Pursuant to Section 19(b)(1)[1] of the Securities Exchange Act of 1934 (the "Act")[2] and Rule 19b–4 thereunder,[3] notice is hereby given that, on March 25, 2010, New York Stock Exchange LLC ("NYSE" or the "Exchange") filed with the Securities and Exchange Commission (the "Commission") the proposed rule change as described in Items I and II below, which Items have been prepared by the self-regulatory organization. The Commission is publishing this notice to solicit comments on the proposed rule change from interested persons.

I. Self-Regulatory Organization's Statement of the Terms of Substance of the Proposed Rule Change

The Exchange proposes to amend NYSE Rule 1 ("The Exchange") to provide that the Exchange may formally designate one or more qualified employees to act in place of any person named in a rule as having authority to act under such rule if the named person is not available to administer the rule; and (2) amend NYSE Rule 51 ("Hours of Business") to clarify the scope of authority vested in the Chief Executive Officer ("CEO") and to make several non-substantive stylistic changes to the rule text. The text of the proposed rule change is available at the Exchange, the Commission's Public Reference Room, *http://www.sec.gov,* and *http://www.nyse.com.*

II. Self-Regulatory Organization's Statement of the Purpose of, and Statutory Basis for, the Proposed Rule Change

In its filing with the Commission, the self-regulatory organization included statements concerning the purpose of, and basis for, the proposed rule change and discussed any comments it received on the proposed rule change. The text of those statements may be examined at the places specified in Item IV below. The Exchange has prepared summaries, set forth in sections A, B, and C below, of the most significant parts of such statements.

A. Self-Regulatory Organization's Statement of the Purpose of, and Statutory Basis for, the Proposed Rule Change

1. Purpose

NYSE proposes to amend NYSE Rule 1 to provide that the Exchange may formally designate one or more qualified employees to act in place of any person named in a rule as having authority to act under such rule in the event that the named person is not available. The Exchange believes that providing for such delegations will enable administration of NYSE rules in a more efficient manner in the event the specified individual is unavailable. Separately, the Exchange proposes to amend NYSE Rule 51 to clarify the scope of authority vested in the Chief Executive Officer ("CEO") to take certain actions when he deems such actions necessary or appropriate for the maintenance of a fair and orderly market, the protection of investors or otherwise in the public interest, due to extraordinary circumstances.

The Exchange notes that parallel changes are proposed to be made to the rules of NYSE Amex LLC (formerly the American Stock Exchange).[4]

NYSE Rule 1

NYSE Rule 1 provides that "the Exchange" is defined as the New York Stock Exchange LLC or the officer, employee, person, entity or committee to whom appropriate authority to administer such rule has been delegated by the Exchange when used with reference to the administration of any rule.

Additionally, NYSE Rule 1 provides that all references to the "Board," "Board of Directors," "Chairman," "Chairman of the Board," "Chief Executive Officer" and "CEO" refer to those persons and entities of the Exchange.

---

[16] 17 CFR 200.30–3(a)(12).

[1] 15 U.S.C. 78s(b)(1).

[2] 15 U.S.C. 78a.

[3] 17 CFR 240.19b–4.

[4] *See* SR–NYSEAmex–2009–29 [sic].

Through this filing, the Exchange proposes to amend NYSE Rule 1 to include a provision that the CEO or the Chief Regulatory Officer ("CRO") of the Exchange may formally designate one or more qualified employees of NYSE Euronext to act in place of any person named in a rule as having authority to act under such rule in the event that the named person is not available to administer the rule. For purposes of designation by a CEO, a qualified employee is defined as: (1) Any officer of NYSE Euronext; or (2) any employee of the Exchange that the Board of Directors deems to possess the requisite knowledge and job qualifications to administer that rule.[5]

Additionally, in certain instances, the Exchange's CRO is one of the named persons identified to administer particular NYSE rules. In these situations, a qualified employee of NYSE Regulation, Inc. ("NYSER") may serve as the CRO's designee if the CRO and the Board of Directors of NYSER deem such employee to have the requisite knowledge and job qualifications to administer the rule in place of the CRO. All qualified employees of NYSE Euronext shall be subject to the jurisdictions set forth in Section 7.1 of NYSE Euronext's Amended and Restated Bylaws.[6]

The Exchange believes that it is important that its rules provide for appropriate delegations of authority to ensure business continuity and that all rules can be properly administered even if the specified official is unavailable. The proposed provision applicable to all NYSE rules will enable consistent delegation standards and eliminate any potential for confusion that could result because some rules currently provide for delegation while others do not.

The Exchange has implemented policies and procedures to formally identify the officers and employee [sic] who have been delegated authority to administer a particular rule on behalf of any named person identified in that rule. The Exchange considers the delegation of authority to be a corporate function; accordingly, such formal delegation is subject to approval by the CEO, CRO and Boards of Directors of the Exchange or NYSER, as applicable, as well as compliance with all applicable Bylaws of the Exchange. These delegations of authority are centrally maintained and periodically updated by the Office of General Counsel to remain current with final approval by the CEO of the Exchange or NYSER as applicable.

NYSE Rule 51

NYSE Rule 51 vests the CEO with the powers to suspend or halt trading in any security traded on the Exchange, as well as to close some or all Exchange facilities, if he deems such action to be necessary or appropriate for the maintenance of a fair and orderly market, or the protection of investors, or otherwise in the public interest, due to extraordinary circumstances. "Extraordinary circumstances" are defined in NYSE Rule 51 as "(1) actual or threatened physical danger, severe climatic conditions, civil unrest, terrorism, acts of war, or loss or interruption of facilities utilized by the Exchange, (2) a request by a governmental agency or official, or (3) a period of mourning or recognition for a person or event."

The Exchange proposes to amend NYSE Rule 51 to clarify that the CEO has the authority to extend the hours for the transaction of business on the Exchange and to set a delayed closing time if the CEO deems such action to be necessary or appropriate for the maintenance of a fair and orderly market, or the protection of investors, or otherwise in the public interest, due to extraordinary circumstances. The Exchange has interpreted the CEO's authority to halt securities and determine the length of such halt to include extending the regular closing, in order to ensure that closing trades in securities traded on the Exchange are conducted in a manner consistent with a fair and order market and the protection of investors and the public interest.[7] However, in order to provide appropriate transparency to market participants, the Exchange proposes to clarify and codify the CEO's authority in this regard.

The Exchange also proposes to make several non-substantive changes to the rule text by amending the rule text in Rule 51(a) to conform with proposed Rule 51(b)(ii) and by abbreviating references to "Chief Executive Officer" with "CEO."

2. Statutory Basis

The basis under the Act for the proposed rule change is the requirement under Section 6(b)(5),[8] which requires that an exchange have rules that are designed to foster cooperation and coordination with persons engaged in regulating, clearing, settling, processing information with respect to, and facilitating transactions in securities, to remove impediments to and perfect the mechanism of a free and open market and a national market system and, in general, to protect investors and the public interest. The proposed rule change is consistent with these objectives in that these amendments establish the appropriate Exchange protocols and procedures to administer Exchange rules designed to protect investors and the public interest.

B. Self-Regulatory Organization's Statement on Burden on Competition

The Exchange does not believe that the proposed rule change will impose any burden on competition that is not necessary or appropriate in furtherance of the purposes of the Act.

C. Self-Regulatory Organization's Statement on Comments on the Proposed Rule Change Received From Members, Participants or Others

No written comments were solicited or received with respect to the proposed rule change.

[5] Rule 46.10 provides that for purposes of Rule 46 only, the term "qualified NYSE Euronext employee" shall mean "employees of NYSE Euronext, Inc. or any of its subsidiaries, excluding employees of NYSE Regulation, Inc., who shall have satisfied any applicable testing or qualification required by the NYSE for all Floor Governors." That definition shall not be applied to any other NYSE Rule and is separate and distinct from the Rule 1 definition discussed herein.

[6] Article VII, Section 7.1 of the Amended and Restated Bylaws of NYSE Euronext states the following:

Submission to Jurisdiction of U.S. Courts and the SEC. The Corporation, its directors and officers, and those of its employees whose principal place of business and residence is outside of the United States shall be deemed to irrevocably submit to the jurisdiction of the U.S. federal courts and the SEC for the purposes of any suit, action or proceeding pursuant to the U.S. federal securities laws and the rules and regulations thereunder, commenced or initiated by the SEC arising out of, or relating to, the activities of the U.S. Regulated Subsidiaries (and shall be deemed to agree that the Corporation may serve as the U.S. agent for purposes of service of process in such suit, action or proceeding), and the Corporation and each such director, officer or employee, in the case of any such director, officer or employee by virtue of his acceptance of any such position, shall be deemed to waive, and agree not to assert by way of motion, as a defense or otherwise in any such suit, action or proceeding, any claims that it or they are not personally subject to the jurisdiction of the SEC, that such suit, action or proceeding is an inconvenient forum or that the venue of such suit, action or proceeding is improper, or that the subject matter thereof may not be enforced in or by such courts or agency.

[7] NYSER has previously announced this policy in several Information Memos that were issued in connection with the Russell Reconstitution in June 2008 and June 2009. Those memos described (among other things) the Exchange's various contingency scenarios and procedures, including extending the closing time in the event that a systems malfunction occurs at or near the regular 4:00 p.m. closing time. *See* NYSE Rule 51; *See also* IM 08–30 and IM 09–27. The Exchange has also periodically issued memoranda from its Floor Operations staff, advising of the same contingency scenarios and procedures.

[8] 15 U.S.C. 78f(b)(5).

III. Date of Effectiveness of the Proposed Rule Change and Timing for Commission Action

The Exchange has filed the proposed rule change pursuant to Section 19(b)(3)(A)(iii) of the Act [9] and Rule 19b–4(f)(6) thereunder.[10] Because the proposed rule change does not: (i) Significantly affect the protection of investors or the public interest; (ii) impose any significant burden on competition; and (iii) become operative prior to 30 days from the date on which it was filed, or such shorter time as the Commission may designate, if consistent with the protection of investors and the public interest, the proposed rule change has become effective pursuant to Section 19(b)(3)(A) of the Act and Rule 19b–4(f)(6)(iii) thereunder.

At any time within 60 days of the filing of the proposed rule change, the Commission may summarily abrogate such rule change if it appears to the Commission that such action is necessary or appropriate in the public interest, for the protection of investors, or otherwise in furtherance of the purposes of the Act.

IV. Solicitation of Comments

Interested persons are invited to submit written data, views, and arguments concerning the foregoing, including whether the proposed rule change is consistent with the Act. Comments may be submitted by any of the following methods:

Electronic Comments

- Use the Commission's Internet comment form (*http://www.sec.gov/rules/sro.shtml*); or
- Send an e-mail to *rule-comments@sec.gov.* Please include File Number SR–NYSE–2010–26 on the subject line.

Paper Comments

- Send paper comments in triplicate to Elizabeth M. Murphy, Secretary, Securities and Exchange Commission, 100 F Street, NE., Washington, DC 20549–1090.

All submissions should refer to File Number SR–NYSE–2010–26. This file number should be included on the subject line if e-mail is used. To help the Commission process and review your comments more efficiently, please use only one method. The Commission will post all comments on the Commission's Internet Web site (*http://www.sec.gov/rules/sro.shtml*). Copies of the submission, all subsequent amendments, all written statements with respect to the proposed rule change that are filed with the Commission, and all written communications relating to the proposed rule change between the Commission and any person, other than those that may be withheld from the public in accordance with the provisions of 5 U.S.C. 552, will be available for Web site viewing and printing in the Commission's Public Reference Room, 100 F Street, NE., Washington, DC 20549, on official business days between the hours of 10 a.m. and 3 p.m. Copies of such filing also will be available for inspection and copying at the principal office of the Exchange. All comments received will be posted without change; the Commission does not edit personal identifying information from submissions. You should submit only information that you wish to make publicly available. All submissions should refer to File Number SR–NYSE–2010–26 and should be submitted on or before April 28, 2010.

For the Commission, by the Division of Trading and Markets, pursuant to delegated authority.[11]

Florence E. Harmon,

Deputy Secretary.

[FR Doc. 2010–7838 Filed 4–6–10; 8:45 am]

BILLING CODE 8011–01–P

[9] 15 U.S.C. 78s(b)(3)(A)(iii).

[10] 17 CFR 240.19b–4(f)(6).

[11] 17 CFR 200.30–3(a)(12).

SECURITIES AND EXCHANGE COMMISSION

[Release No. 34–61807; File No. SR–NYSEAmex–2010–09]

Self-Regulatory Organizations; NYSE Amex LLC; Order Granting Approval of Proposed Rule Change Amending Its Trust Unit Rules and Proposing the Listing of the Nuveen Diversified Commodity Fund

March 31, 2010.

On January 29, 2010, NYSE Amex LLC ("NYSE Amex" or "Exchange") filed with the Securities and Exchange Commission ("Commission"), pursuant to Section 19(b)(1) of the Securities Exchange Act of 1934 ("Act") [1] and Rule 19b–4 thereunder,[2] a proposed rule change to amend NYSE Amex Rule 1600 *et seq.* to permit the listing and trading of shares ("Shares") of the Nuveen Diversified Commodity Fund (the "Fund"). The proposed rule change was published in the **Federal Register** on March 1, 2010.[3] The Commission received no comments on the proposal. This order approves the proposed rule change.

I. Description of the Proposal

NYSE Amex previously adopted Rule 1600 *et seq.* to permit the listing of Trust Units, which are defined as securities that are issued by a trust or other similar entity that invests in the assets of a trust, partnership, limited liability company, corporation or other similar entity constituted as a commodity pool that holds investments comprising or otherwise based on any combination of futures contracts, options on futures contracts, forward contracts, swap contracts and/or commodities.[4] Rule 1600 was adopted in contemplation of the listing of shares of the Nuveen Commodities Income and Growth Fund (the "Fund"), a fund sponsored by Nuveen Investments, Inc. ("Nuveen"). Nuveen now proposes to go forward with a listing of shares (the "Shares") of the Fund under a new name, the Nuveen Diversified Commodity Fund, and with a modified investment plan, which is described in detail in the Notice.[5] NYSE Amex Rule 1600 as currently in effect permits only the listing of Trust Units whose issuers utilize the master/feeder structure originally intended to be used for the Fund. According to the Exchange, due to a change in the interpretation of applicable tax law by the Internal Revenue Service, the originally expected trust reporting procedures would no longer be available under a master/feeder structure. Nuveen therefore proposes to modify its approach and have the listed Fund make its own direct investments. Consequently, the Exchange proposes to amend the definition of Trust Units in Rule 1600 to remove the master/feeder structure requirement and permit the listing of Trust Units where the issuer is constituted as a commodity pool which invests directly in commodities and commodity derivatives. Nuveen has represented to the Exchange that there are no material revisions to the Fund's structure or investment approach other than those described in this current filing.

[1] 15 U.S.C. 78s(b)(1).

[2] 17 CFR 240.19b–4.

[3] *See* Securities Exchange Act Release No. 61571 (February 23, 2010), 75 FR 9265 ("Notice").

[4] *See* Securities Exchange Act Release No. 56880 (December 3, 2007), 72 FR 69259 (December 7, 2007) (SR–Amex–2006–96) (order approving NYSE Amex Rule 1600 *et seq.*).

[5] *See* Securities Exchange Act Release No. 56465 (September 19, 2007), 72 FR 54489 (September 25, 2007) (SR–Amex–2006–96) (notice providing a description of the Fund).

The Fund was formed as a Delaware statutory trust on December 7, 2005 pursuant to a Declaration of Trust signed by Wilmington Trust Company, as the Delaware Trustee.[6] The Fund's primary investment objective is to seek total return through broad exposure to the commodities markets. The Fund's secondary objective is to provide investors with monthly income and capital distributions not commonly associated with commodity investments. The Fund intends to pursue its investment objective by utilizing: (a) An actively managed rules-based commodity investment strategy, whereby the Fund will invest in a diversified basket of commodity futures and forward contracts with an aggregate notional value substantially equal to the net assets of the Fund; and (b) a risk management program designed to moderate the overall risk and return characteristics of the Fund's commodity investments. The Fund will invest in commodity futures and forward contracts, options on commodity futures and forward contracts and over-the-counter ("OTC") commodity options in the following commodity groups: energy, industrial metals, precious metals, livestock, agriculturals, and tropical foods and fibers and may in the future include other commodity investments that become the subject of commodity futures trading.

The Fund is a commodity pool and is managed by Nuveen Commodities Asset Management, LLC (the "Manager"). The Manager is registered as a commodity pool operator (the "CPO") and a commodity trading advisor (the "CTA") with the Commodity Futures Trading Commission ("CFTC") and is a member of the National Futures Association ("NFA"). The Manager will serve as the CPO and a CTA of the Fund and will determine the Fund's overall investment strategy, including: (i) The selection and ongoing monitoring of the Fund's sub-advisors; (ii) the management of the Fund's business affairs; and (iii) the provision of certain clerical, bookkeeping and other administrative services. Gresham Investment Management LLC (the "Commodity Sub-Advisor") will invest on a notional basis substantially all of the Fund's assets in commodity futures and forward contracts pursuant to the commodity investment strategy and a risk management program.[7] The Commodity Sub-Advisor is a Delaware limited liability company and is registered with the CFTC as a CTA and a CPO and is a member of the NFA. The Commodity Sub-Advisor is also registered with the Commission as an investment adviser. Nuveen Asset Management (the "Collateral Sub-Advisor"), an affiliate of the Manager, will invest the Fund's collateral in short-term, investment-grade quality debt instruments. The Collateral Sub-Advisor is registered with the Commission as an investment adviser.

The Exchange states that the Shares will conform to the initial and continued listing criteria under NYSE Amex Rule 1602 and that the Fund has represented to the Exchange that, for initial and continued listing of the Shares, it will be in compliance with Section 803 of the NYSE Amex Company Guide (Independent Directors and Audit Committee) and Rule 10A–3 under the Act.[8] Additional information regarding the Fund, the Shares, the Fund's investment objectives, strategies, policies, and restrictions, fees and expenses, availability of information, trading rules, and surveillance procedures, among other things, can be found in the Notice.[9]

II. Discussion and Commission's Findings

The Commission has carefully reviewed the proposed rule change and finds that it is consistent with the requirements of Section 6 of the Act[10] and the rules and regulations thereunder applicable to a national securities exchange.[11] In particular, the Commission finds that the proposal is consistent with Section 6(b)(5) of the Act,[12] which requires, among other things, that the Exchange's rules be designed to promote just and equitable principles of trade, to remove impediments to and perfect the mechanism of a free and open market and a national market system, and, in general, to protect investors and the public interest. The Commission notes that the Shares must comply with the requirements of NYSE Amex Rule 1600 *et seq.* to be listed and traded on the Exchange.

The Commission finds that the proposal to list and trade the Shares on the Exchange is consistent with Section 11A(a)(1)(C)(iii) of the Act,[13] which sets forth Congress' finding that it is in the public interest and appropriate for the protection of investors and the maintenance of fair and orderly markets to assure the availability to brokers, dealers, and investors of information with respect to quotations for and transactions in securities. The daily settlement prices for the commodity futures and forward contracts held by the Fund are publicly available on the Web sites of the futures and forward exchanges trading the particular contracts. Various data vendors and news publications publish futures prices and data. The Exchange represents that futures, forwards and related exchange traded options quotes and last sale information for the commodity contracts are widely disseminated through a variety of market data vendors worldwide, including Bloomberg and Reuters. In addition, the Exchange further represents that complete real-time data for such futures, forwards and exchange traded options is available by subscription from Reuters and Bloomberg. The relevant futures and forward exchanges also provide delayed futures and forward contract information on current and past trading sessions and market news free of charge on their respective Web sites. The contract specifications for the futures and forward contracts are also available from the futures and forward exchanges on their Web sites as well as other financial informational sources.

The Fund's total portfolio holdings will also be disclosed and updated on its Web site on each business day that the Exchange is open for trading.[14] This Web site disclosure of portfolio holdings (as of the previous day's close) will be made daily and will include, as applicable: (a) The name and value of each commodity investment; (b) the value of over-the-counter commodity put options, if any, and the value of the collateral as represented by cash; (c) cash equivalents; and (d) debt securities held in the Fund's portfolio. The values of the Fund's portfolio holdings will, in

[6] The Fund, as a commodity pool, will not be subject to registration and regulation under the Investment Company Act of 1940 (the "1940 Act").

[7] The Fund does not intend to utilize leverage. However, the Fund may borrow for temporary or emergency purposes in an amount up to 5% of the value of the Fund's net assets should the need arise. Such short-term borrowings would mature in less than 60 days from the date of borrowing. In order to facilitate any such borrowing, the Fund intends to establish a standby credit facility with State Street Bank and Trust Company that will be entered into as of the closing of the offering of its common shares. Any temporary or emergency borrowings would be used to provide the Fund with added potential flexibility in managing short-term portfolio liquidity needs and managing the payment of distributions.

[8] 17 CFR 240.10A–3.

[9] *See supra* note 3.

[10] 15 U.S.C. 78f.

[11] In approving this proposed rule change the Commission has considered the proposed rule's impact on efficiency, competition, and capital formation. *See* 15 U.S.C. 78c(f).

[12] 17 U.S.C. 78f(b)(5).

[13] 15 U.S.C. 78k–1(a)(1)(C)(iii).

[14] The total portfolio holdings will be disseminated to all market participants at the same time.

each case, be determined in accordance with the Fund's valuation policies.

The Commission further believes that the proposal is reasonably designed to promote fair disclosure of information that may be necessary to price the Shares appropriately and to prevent trading when a reasonable degree of transparency cannot be assured. The Commission notes that the Exchange will obtain a representation from the issuer that the NAV per Share will be calculated daily and made available to all market participants at the same time.[15] The Manager has represented to the Exchange that the NAV will be disseminated to all market participants at the same time.[16] Additionally, if the Exchange becomes aware that the portfolio holdings and net asset value per share are not being disseminated as required, the Exchange may halt trading during the day in which the interruption to the dissemination of the portfolio holdings or net asset value per share occurs. If the interruption to the dissemination of the portfolio holdings or net asset value per share persists past the trading day in which it occurred, the Exchange will halt trading no later than the beginning of the trading day following the interruption.[17]

In addition, each of the Manager, the Commodity Broker, and the Commodity Sub-Advisor have represented to the Exchange that they have erected and maintain firewalls within their respective institutions to prevent the flow of non-public information regarding the portfolio of underlying securities from the personnel involved in the development and implementation of the investment strategy to others such as sales and trading personnel.

The Exchange has represented that the Shares are equity securities subject to the Exchange's rules governing the trading of equity securities. In support of this proposal, the Exchange has made representations, including:

(1) The Shares will conform to the initial and continued listing criteria under NYSE Amex Rule 1602.

(2) The Exchange's surveillance procedures are adequate to properly monitor Exchange trading of the Shares and to deter and detect violations of Exchange rules and applicable Federal securities laws.

(3) The Exchange will distribute an Information Circular to its members in connection with the trading of the Shares. The Circular will discuss the special characteristics and risks of trading this type of security. Specifically, the Circular, among other things, will discuss what the Shares are, the requirement that members and member firms deliver a prospectus to investors purchasing the Shares prior to or concurrently with the confirmation of a transaction during the initial public offering, applicable NYSE Amex rules, and trading information and applicable suitability rules. The Circular will also explain that the Fund is subject to various fees and expenses described in the Registration Statement. The Circular will also reference the fact that there is no regulated source of last sale information regarding physical commodities and note the respective jurisdictions of the Commission and CFTC. The Circular will advise members of their suitability obligations with respect to recommended transactions to customers in the Shares.

(4) The Fund will be in compliance with Rule 10A–3 under the Act. This approval order is based on the Exchange's representations.

In addition, the Commission finds that the proposed changes to NYSE Amex Rule 1600 *et seq.* to amend the definition of Trust Units to remove the master/feeder structure requirement and to modify and update the rules to make them consistent with the Exchange's recent rule book changes are consistent with the Act.

For the foregoing reasons, the Commission finds that the proposed rule change is consistent with the Act and the rules and regulations thereunder applicable to a national securities exchange.

III. Conclusion

It is therefore ordered, pursuant to Section 19(b)(2) of the Act,[18] that the proposed rule change (SR–NYSEAmex–2010–09), be, and it hereby is, approved.

For the Commission, by the Division of Trading and Markets, pursuant to delegated authority.[19]

Florence E. Harmon,

Deputy Secretary.

[FR Doc. 2010–7836 Filed 4–6–10; 8:45 am]

BILLING CODE 8011–01–P

[15] *See* NYSE Amex Rule 1602 (a)(ii).

[16] *See Notice, supra,* note 3.

[17] *See* NYSE Amex Rule 1602(b)(ii).

[18] 15 U.S.C. 78s(b)(2).

[19] 17 CFR 200.30–3(a)(12).

SECURITIES AND EXCHANGE COMMISSION

[Release No. 34–61812; File No. SR–Phlx–2010–49]

Self-Regulatory Organizations; Notice of Filing and Immediate Effectiveness of a Proposed Rule Change by NASDAQ OMX PHLX, Inc. To Establish $2.50 Strike Price Intervals for Options on the NASDAQ Internet Index SM

March 31, 2010.

Pursuant to Section 19(b)(1) of the Securities Exchange Act of 1934 ("Act"),[1] and Rule 19b–4 [2] thereunder, notice is hereby given that on March 29, 2010, NASDAQ OMX PHLX, Inc. ("Phlx" or "Exchange") filed with the Securities and Exchange Commission ("SEC" or "Commission") the proposed rule change as described in Items I, II, and III, below, which Items have been prepared by the Exchange. The Commission is publishing this notice to solicit comments on the proposed rule change from interested persons.

I. Self-Regulatory Organization's Statement of the Terms of Substance of the Proposed Rule Change

The Exchange is filing with the Commission a proposal to amend: Phlx Rule 1101A (Terms of Options Contracts) regarding listing options on the NASDAQ Internet Index SM trading under the symbol QNET at $2.50 strike-price intervals below $200; and Phlx Rule 1107A (NASDAQ OMX Group, Inc. Indexes) regarding disclaimer of express or implied warranties in respect of NASDAQ OMX Group, Inc. ("NASDAQ") indexes.

The Exchange requests that the Commission waive the 30-day operative delay period contained in Exchange Act Rule 19b–4(f)(6)(iii).[3]

The text of the proposed rule change is available on the Exchange's Web site at *http://nasdaqomxphlx.cchwallstreet.com/NASDAQOMXPHLX/Filings/,* at the principal office of the Exchange, and at the Commission's Public Reference Room.

II. Self-Regulatory Organization's Statement of the Purpose of, and Statutory Basis for, the Proposed Rule Change

In its filing with the Commission, the Exchange included statements concerning the purpose of and basis for the proposed rule change and discussed any comments it received on the

[1] 15 U.S.C. 78s(b)(1).

[2] 17 CFR 240.19b–4.

[3] 17 CFR 240.19b–4(f)(6)(iii).

proposed rule change. The text of these statements may be examined at the places specified in Item IV below. The Exchange has prepared summaries, set forth in sections A, B, and C below, of the most significant aspects of such statements.

A. Self-Regulatory Organization's Statement of the Purpose of, and Statutory Basis for, the Proposed Rule Change

1. Purpose

The purpose of the proposal is to amend Rule 1101A regarding listing options on the NASDAQ Internet Index SM trading under the symbol QNET (the "Index") at $2.50 strike-price intervals below $200; and to amend Rule 1107A regarding disclaimer of express or implied warranties in respect of NASDAQ Indexes.

The NASDAQ Internet Index SM has been listed and maintained by NASDAQ OMX continuously since November 27, 2007.[4] The Index is designed to track the performance of the largest and most liquid U.S.-listed companies engaged in internet-related businesses that are listed on a U.S. stock exchange. The Index includes companies engaged in a broad range of internet-related services including, but not limited to internet software, internet access providers, internet search engines, web hosting, Web site design, and internet retail commerce. The Exchange intends to list options on the Index per subsection (b) of Rule 1009A (Designation of the Index).[5]

Phlx Rule 1101A currently indicates in subsection (a) that the Exchange shall determine fixed point strike price intervals for index options at no less than $5.00, provided that for indexes that are listed in Rule 1101A, the Exchange may determine to list strike prices at no less than $2.50 intervals if the strike price is less than $200. The rule provides also that such options may be listed at no less than $2.50 strike price intervals on indexes delineated in this rule, and in response to demonstrated customer interest or specialist request. Demonstrated customer interest includes institutional (firm) corporate or customer interest expressed directly to the Exchange or through the customer's floor brokerage unit, but not interest expressed by a Registered Options Trader ("ROT") with respect to trading for the ROT's own account.[6]

The proposed rule change adds the NASDAQ Internet IndexSM to the list of indexes in Rule 1101A upon which the Exchange may list options at $2.50 strike price intervals.[7]

Phlx Rule 1107A currently provides that NASDAQ does not guarantee the accuracy and/or uninterrupted calculation of the NASDAQ–100 Index® (the "index") or any data included therein; makes no warranty, express or implied, as to results to be obtained by the Exchange, owners of the options on the index, or any other person or entity from the use of the index or any data included therein; and makes no express or implied warranties, and expressly disclaims all warranties of merchantability or fitness for a particular purpose or use with respect to the index or any data included therein. The rule also provides, without limiting any of the foregoing, that in no event shall NASDAQ have any liability for any lost profits or special, incidental, punitive, indirect, or consequential damages, even if notified of the possibility of such damages. In proposing adoption of Rule 1007A, the Exchange stated that Rule 1107A, being similar in concept to current Rules 1104A, 1105A, and 1106A, as well as rules of other options exchanges, should put NASDAQ on similar footing with other licensors of options on indexes to the Exchange.[8]

The proposed rule change expands the coverage of Rule 1107A to include the NASDAQ Internet Index SM.

The Exchange believes that its proposal to modify Rules 1101A and 1107A should encourage listing and trading options on the NASDAQ Internet Index SM at appropriate strike price intervals and should encourage maintenance of the index so that overlying options may be available for listing and trading, thereby expanding investment and hedging opportunities for investors and other market participants.

2. Statutory Basis

The Exchange believes that its proposal is consistent with Section 6(b) of the Act[9] in general, and furthers the objectives of Section 6(b)(5) of the Act[10] in particular, in that it is designed to prevent fraudulent and manipulative acts and practices, to promote just and equitable principles of trade, to foster cooperation and coordination with persons engaged in facilitating transactions in securities, and to remove impediments to and perfect the mechanisms of a free and open market and a national market system, by encouraging listing options on the NASDAQ Internet Index SM at appropriate strike price intervals and encouraging maintenance of the index so that options overlying the index may be available for trading and hedging.

B. Self-Regulatory Organization's Statement on Burden on Competition

The Exchange does not believe that the proposed rule change will impose any burden on competition not necessary or appropriate in furtherance of the purposes of the Act.

C. Self-Regulatory Organization's Statement on Comments on the Proposed Rule Change Received From Members, Participants, or Others

No written comments were either solicited or received.

III. Date of Effectiveness of the Proposed Rule Change and Timing for Commission Action

The Exchange believes that the foregoing proposed rule change may take effect upon filing with the Commission pursuant to Section 19(b)(3)(A)[11] of the Act and Rule 19b–4(f)(6)(iii) thereunder[12] because the foregoing proposed rule change does not: (i) Significantly affect the protection of investors or the public interest; (ii) impose any significant burden on competition; and (iii) become

[4] For a description of the Index, Index Methodology, and Index pricing, *see https://indexes.nasdaqomx.com/*. An Exchange-Traded Fund denominated The PowerShares Nasdaq Internet Portfolio (PNQI), which is based on the Index, was initiated last year.

[5] No options are currently traded on the Index. Rule 1009A establishes generic listing standards for options on narrow-based and broad-based indexes pursuant to Rule 19b–4(e) of the Act. *See* Securities Exchange Act Release No. 40761 (December 8, 1998), 63 FR 70952 (December 22, 1998). The listing standards in Rule 1009A are similar to those of other options exchanges such as, for example, Chicago Board Options Exchange, Incorporated ("CBOE"); International Stock Exchange LLC ("ISE"); and The NASDAQ Stock Market LLC ("NASDAQ Market").

[6] Subsection (b) of Rule 1014 states that an ROT is a regular member or a foreign currency options participant of the Exchange located on the trading floor who has received permission from the Exchange to trade in options for his own account, and includes a Streaming Quote Trader and a Remote Streaming Quote Trader as defined in Rule 1014.

[7] For recent rule change proposals wherein the Exchange similarly added other indexes to Rule 1101A, *see* Securities Exchange Act Release Nos. 57899 (June 2, 2008), 73 FR 32379 (June 6, 2008) (SR–Phlx–2008–40) (notice of filing and immediate effectiveness); and 57515 (March 18, 2008), 73 FR 15554 (March 24, 2008) (SR–Phlx–2008–21) (notice of filing and immediate effectiveness).

[8] *See* Securities Exchange Act Release No. 58194 (July 18, 2008), 73 FR 43275 (July 24, 2008) (SR–Phlx–2003–21) (notice of filing and immediate effectiveness regarding adoption of Rule 1107A). *See also* disclaimers and limitation of liability at NYSE Amex (formerly "AMEX") Rule 902C and at CBOE Rule 24.14.

[9] 15 U.S.C. 78f(b).

[10] 15 U.S.C. 78f(b)(5).

[11] 15 U.S.C. 78s(b)(3)(A).

[12] 17 CFR 240.19b–4(f)(6)(iii).

operative for 30 days from the date on which it was filed, or such shorter time as the Commission may designate.

At any time within 60 days of the filing of the proposed rule change, the Commission may summarily abrogate such rule change if it appears to the Commission that such action is necessary or appropriate in the public interest, for the protection of investors, or otherwise in furtherance of the purposes of the Act.

IV. Solicitation of Comments

Interested persons are invited to submit written data, views, and arguments concerning the foregoing, including whether the proposed rule change is consistent with the Act. Comments may be submitted by any of the following methods:

Electronic Comments

- Use the Commission's Internet comment form (*http://www.sec.gov/rules/sro.shtml);* or
- Send an e-mail to *rule-comments@sec.gov.* Please include File Number SR–Phlx–2010–49 on the subject line.

Paper Comments

- Send paper comments in triplicate to Elizabeth M. Murphy, Secretary, Securities and Exchange Commission, 100 F Street, NE., Washington, DC 20549–1090.

All submissions should refer to File Number SR–Phlx–2010–49. This file number should be included on the subject line if e-mail is used. To help the Commission process and review your comments more efficiently, please use only one method. The Commission will post all comments on the Commission's Internet Web site (*http://www.sec.gov/rules/sro.shtml*). Copies of the submission, all subsequent amendments, all written statements with respect to the proposed rule change that are filed with the Commission, and all written communications relating to the proposed rule change between the Commission and any person, other than those that may be withheld from the public in accordance with the provisions of 5 U.S.C. 552, will be available for Web site viewing and printing in the Commission's Public Reference Room, 100 F Street, NE., Washington, DC 20549, on official business days between the hours of 10 a.m. and 3 p.m. Copies of the filing also will be available for inspection and copying at the principal office of the Exchange. All comments received will be posted without change; the Commission does not edit personal identifying information from submissions. You should submit only information that you wish to make available publicly. All submissions should refer to File Number SR–Phlx–2010–49 and should be submitted on or before April 28, 2010.

For the Commission, by the Division of Trading and Markets, pursuant to delegated authority.[13]

Florence E. Harmon,

Deputy Secretary.

[FR Doc. 2010–7781 Filed 4–6–10; 8:45 am]

BILLING CODE 8011–01–P

[13] 17 CFR 200.30–3(a)(12).

DEPARTMENT OF STATE

[Public Notice 6943]

Designation and Determination Pursuant to the Foreign Missions Act

Concerning the Designation of entities in the United States that are substantially owned or effectively controlled by the Government of Vietnam as Foreign Missions and the Determination that property transactions on the part of such entities are subject to Foreign Mission Act regulation:

In order to adjust for costs and procedures of obtaining benefits for the mission of the United States in Vietnam and to protect the interests of the United States in that context, pursuant to the authority vested in me by the Foreign Missions Act, 22 U.S.C. 4301 *et seq.* ("the Act"), and Department of State Delegation of Authority No. 214, Section 14, dated September 20, 1994, I hereby designate the Vietnam News Agency, an entity engaged in activities in the United States that is effectively controlled by the Government of Vietnam, and all entities in the United States that are designated by the Department of State as Miscellaneous Foreign Government Offices of the Government of Vietnam now or in the future, including the Vietnam Trade Promotion Center, as well as any other entity in the United States which is substantially owned or effectively controlled by the Government of Vietnam, to be "foreign missions" within the meaning of Section 4302(a)(3) of the Act and determine that the provisions of Section 4305 of the Act apply to the acquisition, proposed sale or disposition of real property by or on behalf of such entities.

Dated: March 30, 2010.

Eric J. Boswell,

Director, Office of Foreign Missions.

[FR Doc. 2010–7905 Filed 4–6–10; 8:45 am]

BILLING CODE 4710–43–P

DEPARTMENT OF STATE

[Public Notice 6946]

Shipping Coordinating Committee; Notice of Committee Meeting

The Shipping Coordinating Committee (SHC) will conduct an open meeting at 10 a.m. on Tuesday, April 20, 2010, in Room 1422 of the United States Coast Guard Headquarters Building, 2100 Second Street, SW., Washington, DC 20593–0001. The primary purpose of the meeting is to prepare for the International Maritime Organization (IMO) Diplomatic Conference to Revise the International Convention on Liability and Compensation for Damage in Connection with the Carriage of Hazardous and Noxious Substances by Sea, 1996 (HNS Convention) to be held at the IMO Headquarters, United Kingdom, from April 26 to April 30, 2010.

The primary matters to be considered include:

—Election of the President

—Adoption of the agenda

—Adoption of the Rules of Procedure

—Election of the Vice-Presidents and other officers of the Conference

—Appointment of the Credentials Committee

—Organization of the work of the Conference, including the establishment of other committees, as necessary

—Consideration of a draft protocol to the International Convention on Liability and Compensation for Damage in Connection with the Carriage of Hazardous and Noxious Substances by Sea, 1996 and any draft Conference resolutions

—Consideration of the reports of the credentials committee and other committees

—Adoption of the Final Act and any instruments, recommendations and resolutions resulting from the work of the Conference

—Signature of the Final Act

Members of the public may attend this meeting up to the seating capacity of the room. To facilitate the building security process, those who plan to attend should contact the meeting coordinator, Ms. Bronwyn G. Douglass, by e-mail at *bronwyn.douglass@uscg.mil,* by phone at (202) 372–3792, by fax at (202) 372–3972, or in writing at Commandant (CG–

0941), U.S. Coast Guard, 2100 2nd Street, SW., Stop 7121, Washington, DC 20593–7121. A member of the public requesting reasonable accommodation should make such request prior to April 13, 2010. Requests made after this date might not be able to be accommodated. Please note that due to security considerations, two valid, government issued photo identifications must be presented to gain entrance to the Headquarters building. The Headquarters building is accessible by taxi and privately owned conveyance (public transportation is not generally available). However, parking in the vicinity of the building is extremely limited. Additional information regarding this and other IMO SHC public meetings may be found at: *http://www.uscg.mil/imo*.

This announcement might appear in the **Federal Register** less than 15 days prior to the meeting. The Department of State finds that there is an exceptional circumstance in that this advisory committee meeting must be held on April 20th in order to prepare for the IMO Diplomatic Conference to be convened on April 26th.

Dated: April 1, 2010.

Greg O'Brien,

Office of Ocean and Polar Affairs, Department of State.

[FR Doc. 2010–7903 Filed 4–6–10; 8:45 am]

BILLING CODE 4710–09–P

DEPARTMENT OF STATE

[Public Notice 6945]

Notice of Meeting of the Cultural Property Advisory Committee

In accordance with the provisions of the Convention on Cultural Property Implementation Act (19 U.S.C. 2601 *et seq.*) (the Act) there will be a meeting of the Cultural Property Advisory Committee on Thursday, May 6, 2010, from 9 a.m. to approximately 5 p.m., and on Friday, May 7, 2010, from 9:00 a.m. to approximately 3 p.m., at the Department of State, Annex 5, 2200 C Street, NW., Washington, DC. During its meeting the Committee will review a proposal to extend the "Memorandum of Understanding Between the Government of the United States of America and the Government of the Republic of Italy Concerning the Imposition of Import Restrictions on Categories of Archaeological Material Representing the Pre-Classical, Classical and Imperial Roman Periods of Italy" signed in Washington, DC on January 19, 2001 and amended and extended in 2006 through an exchange of diplomatic notes. The purpose of this review is for the Committee to make findings and a recommendation regarding the proposal to extend this Memorandum of Understanding.

The Committee's responsibilities are carried out in accordance with provisions of the Act. The U.S.—Italy Memorandum of Understanding, as amended and extended, the Designated List of restricted categories, the text of the Act and related information may be found at *http://exchanges.state.gov/heritage/culprop*.

Exercising delegated authority from the President and the Secretary of State, I have determined that portions of the meeting on May 6 and 7 will be closed pursuant to 5 U.S.C. 552b(c)(9)(B) and 19 U.S.C. 2605(h), because the disclosure of matters involved in the Committee's proceedings would compromise the Government's negotiation objectives or bargaining positions on the negotiations of this Memorandum of Understanding. However, on May 6, the Committee will hold an open session, 9:30 a.m. to approximately 11:30 a.m., to receive oral public comment on the proposal to extend the Memorandum of Understanding. Persons wishing to attend this open session should notify the Cultural Heritage Center of the Department of State at (202) 632–6301 by Thursday, April 22, 2010, 5 p.m. (EDT) to arrange for admission, as seating is extremely limited.

Those who wish to make oral presentations should request to be scheduled and submit a written text of the oral comments by Thursday, April 22, 2010, to allow time for distribution of these comments to Committee members for their review prior to the meeting. Oral comments will be limited to five minutes each or less to allow time for questions from members of the Committee and must specifically address the determinations under section 303(a)(1) of the Act, 19 U.S.C. 2602(a)(1), pursuant to which the Committee must make findings. This citation for the determinations can be found at the Web site noted above. The Committee also invites written comments and asks that they be submitted no later than April 22, 2010. All written materials, including the written texts of oral statements, should be faxed to (202) 632–6300, if 5 pages or less. Written comments greater than five pages in length must be duplicated (20 copies) and mailed to Cultural Heritage Center, SA–5, Fifth Floor, Department of State, Washington, DC 20522–0505. Express mail is recommended for timely delivery.

Dated: March 29, 2010.

Judith A. McHale,

Under Secretary, Public Diplomacy and Public Affairs, Department of State.

[FR Doc. 2010–7898 Filed 4–6–10; 8:45 am]

BILLING CODE 4710–05–P

DEPARTMENT OF STATE

[Public Notice 6944]

Notice of Proposal To Extend the Memorandum of Understanding Between the Government of the United States of America and the Government of the Republic of Italy Concerning the Imposition of Import Restrictions on Categories of Archaeological Material Representing the Pre-Classical, Classical and Imperial Roman Periods of Italy

The Government of the Republic of Italy has informed the Government of the United States of its interest in an extension of the Memorandum of Understanding Between the Government of the United States of America and the Government of the Republic of Italy Concerning the Imposition of Import Restrictions on Categories of Archaeological Material Representing the Pre-Classical, Classical and Imperial Roman Periods of Italy.

Pursuant to the authority vested in the Under Secretary for Public Diplomacy and Public Affairs, and pursuant to the requirement under 19 U.S.C. 2602(f)(1), an extension of this Memorandum of Understanding is hereby proposed.

Pursuant to 19 U.S.C. 2602(f)(2), the views and recommendations of the Cultural Property Advisory Committee regarding this proposal will be requested.

A copy of this Memorandum of Understanding, the designated list of restricted categories of material, and related information can be found at the following Web site: *http://exchanges.state.gov/heritage/culprop.*

Dated: March 29, 2010.

Judith A. McHale,

Under Secretary, Public Diplomacy and Public Affairs, Department of State.

[FR Doc. 2010–7894 Filed 4–6–10; 8:45 am]

BILLING CODE 4710–05–P

DEPARTMENT OF TRANSPORTATION

Office of the Secretary

Notice—Interpretation of 49 CFR 158.45

The Department received a request for a legal interpretation from the Interim Trustee of an air carrier in a Chapter 11

liquidation proceeding, regarding an airport's obligation to refund passenger facility charges (PFCs) for certain tickets purchased by consumers with credit cards. These tickets were never used due to the airline's cessation of operations prior to the flight dates. On March 30, 2010, the Department sent the Interim Trustee the response re-printed below, which supersedes informal communications that the Department and the FAA have provided in prior instances.

In the majority of airline customer refund requests, the Department has made clear that no refund of a PFC is due where no refund of the ticket is due, as is usually the case for non-refundable tickets. *See* 14 CFR 158.45(a); 72 FR 28837 at 28843. However, a distinction must be made in an airline's liquidation where the tickets in question were purchased by credit card, the defunct airline has not operated the relevant flights, and the defunct airline is no longer operating (and no delivery of the airline transportation service is therefore possible). In such an instance, pursuant to applicable regulations of the Federal Reserve System, enforced by the Department for airline ticket sales, a refund is due and owing to the customer, including the PFC. *See* Federal Truth in Lending Act/ Regulation Z requirements (12 CFR 226.13(e); 14 CFR 374.3(b)). Because the Interim Trustee's letter requested an interpretation only with respect to tickets purchased with credit cards, the Department's letter addresses only that situation. We defer to the Bankruptcy Court on which party may properly claim repayment of the PFCs from the airports (Aloha's bankruptcy estate or the credit card processor that has refunded such amounts to the ticket purchasers), or how such collection should be effected. If any questions arise, please feel free to contact Ronald Jackson, DOT Assistant General Counsel for Operations, at 202–366–9151.

Issued on March 31, 2010.

Ronald Jackson,

Assistant General Counsel for Operations.

Dane S. Field
Interim Trustee
Estate of Aloha Airlines
P.O. Box 4198
Honolulu, HI 96812–4198

Re: *Passenger Facility Charge Refunds*

Dear Mr. Field: This responds to your March 9, 2009 letter to the U.S. Department of Transportation's (DOT) General Counsel submitted in your capacity as Interim Trustee for Aloha Airlines, which ceased operations on March 31, 2008. Thank you for your patience as we have reviewed this matter.

Specifically, you request "assistance in providing guidance to the airports that refund of [Passenger Facility Charges (PFCs)] by airports is appropriate when refunds for unusable tickets have been refunded to ticket purchasers as a part of a full ticket refund initiated by the airline ticket purchasers." Your letter refers in particular to situations in which the customer held a ticket for an Aloha flight scheduled for March 31, 2008 or later, contacted his/her credit card processor to request a refund given Aloha's cessation of operations, and received the refund—including a refund of the PFC associated with the ticket. Now Aloha's bankruptcy estate seeks to obtain from the relevant airports the amount of PFCs refunded to these customers, but not all of the airports have refunded the amounts to Aloha's estate. As a matter of aviation law (as opposed to bankruptcy law), we believe a refund of the PFCs by the relevant airports is appropriate where an airline fails to provide the purchased flight due to liquidation in bankruptcy.[1] However, out of deference to the Bankruptcy Court presiding over Aloha's estate, we offer no opinion on which party may properly claim repayment of the PFCs from the airports (Aloha's bankruptcy estate or the credit card processor that has refunded such amounts to the ticket purchasers), or how such collection should be effected.

In support of Aloha's position, you cite 14 CFR Section 158.45(a)(3)(i), which states that, "Any change in itinerary initiated by a passenger that requires an adjustment to the amount paid by the passenger is subject to collection or refund of the PFC as appropriate." Section 158.45(a)(3)(ii), on the other hand, states that a passenger's "*failure* to travel on a nonrefundable or expired ticket is not a change in itinerary" requiring a PFC refund. (Italics added.) Arguing against the application of the latter provision, you state that it was Aloha that ceased operations, and thus the passenger did not "fail" to travel. As you explain, "The ticket purchasers requested refund of non-expired tickets on which it is not possible to travel, due to the actions of others, and not the ticket purchaser's inaction." Furthermore, you note that the tickets were "basically usable or refundable until one year after issuance."

It is important to note that the prohibition of refunds in Section 158.45(a)(3)(ii) covers only "a nonrefundable or expired ticket." Section 158.45(a)(3)(ii) further provides that, "[i]f the ticket purchaser is not permitted any fare refund on the unused ticket, the ticket purchaser is not permitted a refund of any PFC associated with that ticket." In the matter before us, DOT understands that the ticket purchasers were given a refund of the full fare, including PFCs, by the credit card processor. Such refunds would be required from a credit card processor by 12 CFR Sections 226.13(a)(3) and (e)(1), both of which are applicable to credit card processors working with air carriers under 14 CFR Section 374.3(b), in the event of a "billing error." The regulations define "billing error" as including "a reflection on or with a periodic statement of an extension of credit for property or services * * * *not delivered to the consumer* or the consumer's designee as agreed," 12 CFR § 226.13(a)(3) (italics added), in which case—at least as an initial matter pending further investigation—the credit card processor must "[c]orrect the billing error and credit the consumer's account with any disputed amount and related finance or other charges, as applicable." 12 CFR § 226.13(e)(1). Barring a reversal of the refund following an investigation, it is then up to the credit card processor and the merchant to work out the matter between themselves, and in the case of a bankruptcy, subject to the terms of any bankruptcy stay or other bankruptcy requirements.

If full fare refunds to the ticket purchasers by the credit card processors were indeed required by 12 CFR Sections 226.13(a)(3) and (e)(1), then the tickets at issue could not be considered "nonrefundable" under Section 158.45(a)(3)(ii). Therefore, the prohibition of PFC refunds in 158.45(a)(3)(ii) is inapplicable, and a refund of the PFCs would be appropriate. Moreover, if the Bankruptcy Court should also find as a factual matter that the tickets under their terms were refundable by Aloha as of the bankruptcy filing date, then that would provide a further basis for a refund.

You indicate that Aloha requests that the airports submit the refunds to the Aloha bankruptcy estate. We do not offer an opinion on that particular issue. As stated above, we defer to the Bankruptcy Court on the appropriate treatment of the PFC revenues. We do note that under 49 U.S.C. Section 40117(g) and 14 CFR Section 158.49(b), an air carrier or its agent holds collected

[1] Our conclusion is based solely on an analysis of 12 CFR Section 226 and 49 U.S.C. Section 40117(g)(4), as implemented by the relevant PFC regulations (as set forth below).

PFC revenues in "trust" for the beneficial interest of the eligible agency imposing the fee, and neither the carrier nor its agent holds legal or equitable interest in the revenues (with exceptions not relevant here). This is not to set forth a DOT position that Aloha may not collect the refundable PFC revenues; rather, as stated above, out of deference to the Bankruptcy Court and because we are not privy to Aloha's arrangements with the credit card processors or the flow of funds in this matter, we defer to the Bankruptcy Court on all such matters, including which party may properly claim repayment of the PFCs, how such collection should be effected, and whether the airports have some other claim to the revenues in these circumstances based on an accounting error or otherwise. But should refund be appropriate, any solution must ensure that the flow of funds among Aloha, the credit card processors, and the airports complies with 14 CFR Sections 158.45 and 158.49.

We appreciate the importance of your work on Aloha's behalf, and we hope that you find this letter helpful. As a courtesy, we are copying the Bankruptcy Court Judge and airports that may be affected by this letter. To be clear, however, this letter is not intended as a DOT position in the bankruptcy proceeding, or any type of final agency action; rather, we are merely providing guidance on the interpretation of the PFC regulations, in response to your request. If you have any further questions, please do not hesitate to contact me at (202) 366–4710.

Sincerely,

Ronald Jackson,

Assistant General Counsel for Operations

cc: United States Bankruptcy Court, District of Hawaii Airport Managers or PFC Contacts for the following airports:

- Sacramento International Airport (SMF)
- San Francisco International Airport (SFO)
- John Wayne-Orange County Airport (SNA)
- Oakland International Airport (OAK)
- Denver International Airport (DEN)
- Los Angeles International Airport (LAX)
- Chicago O'Hare International Airport (ORD)
- San Diego International Airport (SAN)

[FR Doc. 2010–7887 Filed 4–6–10; 8:45 am]

BILLING CODE 4910–9X–P

DEPARTMENT OF TRANSPORTATION

Pipeline and Hazardous Materials Safety Administration

[Docket No. PHMSA–2009–0304]

Request for Public Comments and OMB Approval of Existing Information Collection

AGENCY: Pipeline and Hazardous Materials Safety Administration.

ACTION: Request for Public Comments and OMB approval of existing Information Collection.

SUMMARY: On October 15, 2009, as required by the Paperwork Reduction Act of 1995, the Pipeline and Hazardous Materials Safety Administration (PHMSA) published a notice in the Federal Register to invite comments on a proposed revision to an information collection under Office of Management and Budget (OMB) Control No. 2137–0584, titled "Gas and Hazardous Liquid Pipeline Safety Program." Three comments were received. PHMSA is publishing this notice to respond to those comments, provide the public with an additional 30 days to comment on the proposed revision, and announce that the revised Information Collection will be submitted to the Office of Management and Budget (OMB) for approval.

DATES: Interested persons are invited to submit comments on or before May 7, 2010.

ADDRESSES: You may submit comments identified by the docket number PHMSA–2009–0304 by any of the following methods:

- *Federal eRulemaking Portal: http://www.regulations.gov.* Follow the online instructions for submitting comments.
- *Fax:* 1–202–395–6566.
- *Mail:* Office of Information and Regulatory Affairs (OIRA), Office of Management and Budget (OMB), 726 Jackson Place, NW., Washington, DC 20503, ATTN: Desk Officer for Department of Transportation (DOT).
- *E-mail:* Office of Information and Regulatory Affairs (OIRA), Office of Management and Budget, at the following address: *oira_submissions@omb.eop.gov.*

FOR FURTHER INFORMATION CONTACT: Cameron Satterthwaite by telephone at 202–366–1319, by fax at 202–366–4566, or by mail at U.S. Department of Transportation, Pipeline and Hazardous Materials Safety Administration, 1200 New Jersey Avenue, SE., PHP–30, Washington, DC 20590–0001.

SUPPLEMENTARY INFORMATION: Section 1320.8(d), Title 5, Code of Federal Regulations requires PHMSA to provide interested members of the public and affected agencies an opportunity to comment on information collection and recordkeeping requests. This notice identifies an information collection request that PHMSA is submitting to OMB for revision under OMB Control No. 2137–0584. This information collection is contained in 49 CFR part 198.

PHMSA received comments on the proposed revisions to the information collection from Carolinas AGC, Florida Public Service Commission, and the National Association of Pipeline Safety Representatives (NAPSR). Each of these entities expressed concerns regarding changes to the performance factors (questions with points) or the weights of each factor (score) in the overall scoring of the certification part of the grant allocation formula for the pipeline safety grant program. PHMSA is not making any changes to these areas. Rather, PHMSA is only revising the information collection to incorporate the use of tools that help to determine the amount of funds received by each participating State, and the parameters for those tools have been established for several years. PHMSA is proceeding with the tools specified in the Docket.

An estimate of the revised burden is as follows:

Title: Pipeline Safety: Gas and Hazardous Liquid Pipeline Safety Program Certifications.

OMB Control Number: 2137–0584.

Type of Request: Revision of a currently approved information collection.

Abstract: A State agency participating in the pipeline safety program must maintain records to demonstrate that the agency is properly monitoring the operations of pipeline operators in that State. The State agency must also submit an annual certificate to PHMSA verifying compliance. PHMSA uses the information collected to evaluate the State's eligibility for Federal grants.

Estimated number of respondents: 67.

Estimated annual burden hours: 3,920 hours.

Frequency of collection: Annually.

Issued in Washington, DC, on April 1, 2010.

Alan K. Mayberry,

Deputy Associate Administrator for Field Operations.

[FR Doc. 2010–7930 Filed 4–6–10; 8:45 am]

BILLING CODE 4910–60–P

DEPARTMENT OF TRANSPORTATION

Federal Highway Administration

Rescinding the Notice of Intent for an Environmental Impact Statement: Gilpin, Clear Creek, and Jefferson Counties, CO

AGENCY: Federal Highway Administration, DOT.

ACTION: Notice.

SUMMARY: This notice rescinds the Notice of Intent for preparing an Environmental Impact Statement that was issued on August 11, 2000, for a proposed transportation improvement project in Gilpin, Clear Creek, and Jefferson Counties, Colorado. The action is being taken because there are no federal or state funds identified to make the proposed transportation improvements in this corridor for the next 20 years. It is not known when federal or state funds may become available for these improvements therefore an Environmental Impact Statement will not be prepared until further notice.

FOR FURTHER INFORMATION CONTACT: Ms. Melinda Urban, Operations Engineer, FHWA, Colorado Division, 12300 West Dakota Avenue, Suite 180, Lakewood, CO, 80228, Telephone: (720) 963–3015. Mr. Russel Cox, Resident Engineer, Colorado Department of Transportation Region 1, 425 Corporate Circle, Suite 250, Golden, Colorado 80401, *Telephone:* (720) 497–6905.

SUPPLEMENTARY INFORMATION: The Federal Highway Administration (FHWA) in cooperation with the Colorado Department of Transportation (CDOT) initiated an Environmental Impact Statement (EIS) with a Notice of Intent August 11, 2000, to improve access into the gaming towns of Blackhawk and Central City along the SH 119 corridor. The FHWA and CDOT have determined that while major transportation improvements along SH 119 are needed, federal, state, or other funds are not available to meet these needs in the foreseeable future. Much work has been completed towards an EIS for this corridor and can serve as a planning foundation for future projects by CDOT.

In late 2008 it became apparent that many transportation needs in the State would be competing for very limited funding. This EIS project was one of six major Denver-area EISs initiated in 2000 with the expectation that funding levels would continue and possibly increase. While the need for a project is an important factor in determining which projects receive funding, those with the greatest public and local-entity support are more likely to receive funding in a fiscally-constrained, long-range plan. As a result, the current long-range plan does not include funding for the improvements considered in the Gaming Area EIS. As such, it is not the best use of limited public funds to complete the NEPA process for this project.

If any entity or authority, public or private, wants to proceed with improvements or connections to state highways in this area in the future, applicable state and federal requirements must be met and established study processes followed to determine feasibility and environmental impacts. In consultation with CDOT and FHWA, the information collected as part of Gaming EIS could support efforts to develop these future NEPA, technical studies, or smaller safety projects. Decision-making for future projects within the SH 119 corridor should consider the purpose and need, alternatives development and evaluation, environmental resource background data, and public and agency coordination that was compiled as part of the EIS process.

Authority: (Catalog of Federal Domestic Assistance Program Number 20.205, Highway Planning and Construction. The regulations implementing Executive Order 12372 regarding intergovernmental consultation on Federal programs and activities apply to this program)

Issued On: March 31, 2010.

Karla S. Petty,

Colorado Division Administrator.

[FR Doc. 2010–7796 Filed 4–6–10; 8:45 am]

BILLING CODE 4910–22–P

DEPARTMENT OF TRANSPORTATION

National Highway Traffic Safety Administration

[Docket No. NHTSA–2008–0185; Notice 2]

China Manufacturers Alliance, LLC, Grant of Petition for Decision of Inconsequential Noncompliance

China Manufacturers Alliance, LLC (CMA), as importer of record for Dynacargo brand truck and bus radial tires manufactured by Shandong Jinyu Tyre Company Limited (Jinyu) has determined that certain tires manufactured during the period May 2007 through June 2008 do not fully comply with paragraph S6.5(d) of 49 CFR 571.119 Federal Motor Vehicle Safety Standard (FMVSS) No. 119, *New Pneumatic Tires for Motor Vehicles With a GVWR of More than 4,536 Kilograms (10,000 pounds) and Motorcycles.* The affected tires were imported by CMA and sold to American Tire Distributors (ATD). CMA has filed an appropriate report pursuant to 49 CFR Part 573, *Defect and Noncompliance Responsibility and Reports.*

Pursuant to 49 U.S.C. 30118(d) and 30120(h) (*see* implementing rule at 49 CFR part 556), CMA has petitioned for an exemption from the notification and remedy requirements of 49 U.S.C. Chapter 301 on the basis that this noncompliance is inconsequential to motor vehicle safety. Notice of receipt of the petition was published, with a 30-day public comment period, on December 19, 2008, in the **Federal Register** (73 FR 77873). No comments were received. To view the petition and all supporting documents log onto the Federal Docket Management System Web site at: *http://www.regulations.gov/.* Then follow the online search instructions to locate docket number "NHTSA–2008–0185."

For further information on this decision, contact Mr. George Gillespie, Office of Vehicle Safety Compliance, the National Highway Traffic Safety Administration (NHTSA), telephone (202) 366–5299, facsimile (202) 366–7002.

Affected are approximately 2,537 size 235/75R17.5/16 Dynacargo brand load range H truck and bus tires manufactured during the period May 2007 through June 2008 with DOT date codes in the range 1407 through 2608. 1,153 [1] of these tires are currently under the control of ATD and 1,384 have been sold to consumers.

Paragraph S6.5(d) of 49 CFR 571.119 requires in pertinent part:

> S6.5 Tire markings. Except as specified in this paragraph, each tire shall be marked on each sidewall with the information specified in paragraphs (a) through (j) of this section. The markings shall be placed between the maximum section width (exclusive of sidewall decorations or curb ribs) and the bead on at least one sidewall, unless the maximum section width of the tire is located in an area which is not more than one-fourth of the distance from the bead to the shoulder of the tire. If the maximum section width falls within that area, the markings shall appear between the bead and a point one-half the distance from the bead to the shoulder of the tire, on at least one sidewall. The

[1] CMA's petition, which was filed under 49 CFR Part 556, requests an agency decision to exempt CMA as importer from the notification and recall responsibilities of 49 CFR Part 573 for all 2,537 of the affected tires. However, the agency cannot relieve ATD as distributer of the prohibitions on the sale, offer for sale, or introduction or delivery for introduction into interstate commerce of the noncompliant tires currently under its control. Those tires must be brought into conformance, exported, or destroyed.

markings shall be in letters and numerals not less than 2 mm (0.078 inch) high and raised above or sunk below the tire surface not less that 0.4 mm (0.015 inch), except that the marking depth shall be not less than 0.25 mm (0.010 inch) in the case of motorcycle tires. The tire identification and the DOT symbol labeling shall comply with part 574 of this chapter. Markings may appear on only one sidewall and the entire sidewall area may be used in the case of motorcycle tires and recreational, boat, baggage, and special trailer tires * * *

(d) The maximum load rating and corresponding inflation pressure of the tire, shown as follows:

(Mark on tires rated for single and dual load): Max load single __kg (__lb) at __kPa (__psi) cold. Max load dual __kg (__lb) at __kPa (__psi) cold.

(Mark on tires rated only for single load): Max load __kg (__lb) at __kPa (__psi) cold.

CMA explained that the subject tires are marketed with the correct maximum load rating and corresponding inflation pressure in both English and Metric units. The affected tires have English units on one sidewall and Metric units on the other sidewall. The noncompliance being that both English and Metric units do not both appear on each sidewall.

CMA stated that it believes the noncompliance is inconsequential to motor vehicle safety because correct maximum load rating and corresponding inflation pressure information is marked on each tire in both English and Metric units. Therefore, that information is readily available to anyone who uses the tires.

CMA requested that NHTSA consider its petition and grant an exemption from the recall requirements of the National Traffic and Motor Vehicle Safety Act on the basis that the noncompliance described above is inconsequential as it relates to motor vehicle safety.

NHTSA Decision

The agency agrees with CMA that the noncompliance is inconsequential to motor vehicle safety. The agency believes that the true measure of inconsequentiality to motor vehicle safety in this case is that there is no effect on the operational safety of vehicles on which these tires are mounted.

While the correct tire inflation pressure is included on the subject tire sidewalls, it is not marked in both English and Metric unit systems on each sidewall as required by S6.5(d). However, because the tire inflation pressure is available and stated correctly on each tire, in each unit system, albeit separately, it is unlikely that a consumer will not find or will misread pressure units due to the noncompliance. Therefore, the tires, as labeled, are likely to achieve the safety purpose of the standard. In the agency's judgment, the subject incorrect labeling of the tire inflation pressure information will have an inconsequential effect on motor vehicle safety.

In consideration of the foregoing, NHTSA has decided that CMA has met its burden of persuasion that the subject FMVSS No. 119 labeling noncompliance is inconsequential to motor vehicle safety. Accordingly, CMA's petition is granted and the petitioner is exempted from the obligation of providing notification of, and a remedy for, the subject noncompliance under 49 U.S.C. 30118 and 30120.

Authority: (49 U.S.C. 30118, 30120: delegations of authority at CFR 1.50 and 501.8).

Issued on: April 1, 2010.

Claude Harris,

Director, Office of Vehicle Safety Compliance.

[FR Doc. 2010–7866 Filed 4–6–10; 8:45 am]

BILLING CODE 4910–59–P

DEPARTMENT OF TRANSPORTATION

National Highway Traffic Safety Administration

[Docket No. NHTSA–2008–0213; Notice 2]

Goodyear Tire & Rubber Company, Grant of Petition for Decision of Inconsequential Noncompliance

Goodyear Tire & Rubber Company (Goodyear), has determined that certain passenger car tires manufactured during the period January 25, 2007, through July 24, 2008, do not fully comply with paragraph S5.5(e) of Federal Motor Vehicle Safety Standards (FMVSS) No. 139, *New Pneumatic Radial Tires for Light Vehicles.* Goodyear has filed an appropriate report pursuant to 49 CFR Part 573, *Defect and Noncompliance Responsibility and Reports.*

Pursuant to 49 U.S.C. 30118(d) and 30120(h) and the rule implementing those provisions at 49 CFR Part 556, Goodyear has petitioned for an exemption from the notification and remedy requirements of 49 U.S.C. Chapter 301 on the basis that this noncompliance is inconsequential to motor vehicle safety. Notice of receipt of the petition was published, with a 30-day public comment period, on January 13, 2009, in the **Federal Register** (74 FR 1760). No comments were received. To view the petition and all supporting documents log onto the Federal Docket Management System Web site at: *http://www.regulations.gov/* then follow the online search instructions to locate docket number "NHTSA–2008–0213."

For further information on this decision, contact Mr. George Gillespie, Office of Vehicle Safety Compliance, the National Highway Traffic Safety Administration (NHTSA), telephone (202) 366–5299, facsimile (202) 366–7002.

Affected are approximately 9,864 size 245/45R17 95H Fierce HP brand passenger car tires manufactured during the period January 25, 2007, through July 24, 2008.

Paragraph S5.5(e) of FMVSS No. 139 requires in pertinent part:

S5.5 Tire markings. Except as specified in paragraphs (a) through (i) of S5.5, each tire must be marked on each sidewall with the information specified in S5.5(a) through (d) and on one sidewall with the information specified in S5.5(e) through (i) according to the phase-in schedule specified in S7 of this standard. The markings must be placed between the maximum section width and the bead on at least one sidewall, unless the maximum section width of the tire is located in an area that is not more than one-fourth of the distance from the bead to the shoulder of the tire. If the maximum section width falls within that area, those markings must appear between the bead and a point one-half the distance from the bead to the shoulder of the tire, on at least one sidewall. The markings must be in letters and numerals not less than 0.078 inches high and raised above or sunk below the tire surface not less than 0.015 inches * * *

(e) The generic name of each cord material used in the plies (both sidewall and tread area) of the tire; * * *

Goodyear explains that the noncompliance is that the sidewall marking incorrectly identifies the generic material of the plies in the body of the tire as Nylon when they are in fact polyester. Specifically, the tires in question were inadvertently manufactured with "Tread: 1 Polyester + 2 Steel Cords + 1 Nylon Cord. The labeling should have been "Tread: 1 Polyester Cord + 2 Steel Cords + 1 Polyester Cord" (emphasis added).

Goodyear states that it discovered the mold labeling error that caused the non-compliance during a routine quality audit.

Goodyear argues that the noncompliance is inconsequential to motor vehicle safety because the tires meet or exceed all applicable Federal Motor Vehicle Safety performance standards. All of the markings related to tire service (load capacity, corresponding inflation pressure, *etc.*) are correct. The mislabeling of these tires creates no unsafe condition.

Goodyear states that the affected tire molds have been modified and all future production will have the correct material information shown on the sidewall.

Goodyear also points out that NHTSA has previously granted petitions for sidewall marking noncompliances that it believes are similar to the present noncompliance.

In summation, Goodyear states that it believes that because the noncompliances are inconsequential to motor vehicle safety that no corrective action is warranted.

NHTSA Decision

The agency agrees with Goodyear that the noncompliance is inconsequential to motor vehicle safety. The agency believes that the true measure of inconsequentiality to motor vehicle safety in this case is that there is no effect of the noncompliance on the operational safety of vehicles on which these tires are mounted. The safety of people working in the tire retread, repair, and recycling industries must also be considered. Although tire construction affects the strength and durability, neither the agency nor the tire industry provides information relating tire strength and durability to the number of plies and types of ply cord material in the tread and sidewall. Therefore, tire dealers and customers should consider the tire construction information along with other information such as the load capacity, maximum inflation pressure, and tread wear, temperature, and traction ratings, to assess performance capabilities of various tires. In the agency's judgment, the incorrect labeling of the tire construction information will have an inconsequential effect on motor vehicle safety because most consumers do not base tire purchases or vehicle operation parameters on the ply material in a tire.

The agency also believes the noncompliance will have no measurable effect on the safety of the tire retread, repair, and recycling industries. The use of steel cord construction in the sidewall and tread is the primary safety concern of these industries. In this case, since the tire sidewalls are marked correctly for the number of steel plies, this potential safety concern does not exist.

In consideration of the foregoing, NHTSA has decided that Goodyear has met its burden of persuasion that the subject FMVSS No. 139 labeling noncompliance is inconsequential to motor vehicle safety. Accordingly, Goodyear's petition is granted and the petitioner is exempted from the obligation of providing notification of, and a remedy for, the subject noncompliance under 49 U.S.C. 30118 and 30120.

Authority: 49 U.S.C. 30118, 30120; delegations of authority at 49 CFR 1.50 and 501.8.

Issued on: April 1, 2010.

Claude H. Harris,

Director, Office of Vehicle Safety Compliance.

[FR Doc. 2010–7874 Filed 4–6–10; 8:45 am]

BILLING CODE 4910–59–P

DEPARTMENT OF TRANSPORTATION

National Highway Traffic Safety Administration

[Docket No. NHTSA–2009–0005; Notice 2]

Michelin North America, Inc., Grant of Petition for Decision of Inconsequential Noncompliance

Michelin North America, Inc. (Michelin), has determined that certain passenger car tires manufactured between September 18, 2008, and October 10, 2008, did not fully comply with paragraphs S5.5(e) and S5.5(f) of Federal Motor Vehicle Safety Standards (FMVSS) No. 139, *New Pneumatic Radial Tires for Light Vehicles.* Michelin has filed an appropriate report pursuant to 49 CFR Part 573, *Defect and Noncompliance Responsibility and Reports.*

Pursuant to 49 U.S.C. 30118(d) and 30120(h) and the rule implementing those provisions at 49 CFR Part 556, Michelin has petitioned for an exemption from the notification and remedy requirements of 49 U.S.C. Chapter 301 on the basis that this noncompliance is inconsequential to motor vehicle safety. Notice of receipt of the petition was published, with a 30-day public comment period, on February 19, 2009, in the **Federal Register** (74 FR 7738). No comments were received. To view the petition and all supporting documents log onto the Federal Docket Management System Web site at: *http://www.regulations.gov/*. Then follow the online search instructions to locate docket number "NHTSA–2009–0005."

For further information on this decision, contact Mr. George Gillespie, Office of Vehicle Safety Compliance, the National Highway Traffic Safety Administration (NHTSA), telephone (202) 366–5299, facsimile (202) 366–7002.

Affected are approximately 2,240 size P195/60R15 (87T) Michelin Harmony brand passenger car tires manufactured between September 18, 2008, and October 10, 2008, at Michelin's plant located in Pictou, Canada. Approximately 1,590 of these tires have been delivered to Michelin's customers. The remaining tires (approximately 650) are being held in Michelin's possession until they can be correctly relabeled.

Paragraphs S5.5(e)and S5.5(f) of FMVSS No. 139 require in pertinent part:

S5.5 Tire markings. Except as specified in paragraphs (a) through (i) of S5.5, each tire must be marked on each sidewall with the information specified in S5.5(a) through (d) and on one sidewall with the information specified in S5.5(e) through (i) according to the phase-in schedule specified in S7 of this standard. The markings must be placed between the maximum section width and the bead on at least one sidewall, unless the maximum section width of the tire is located in an area that is not more than one-fourth of the distance from the bead to the shoulder of the tire. If the maximum section width falls within that area, those markings must appear between the bead and a point one-half the distance from the bead to the shoulder of the tire, on at least one sidewall. The markings must be in letters and numerals not less than 0.078 inches high and raised above or sunk below the tire surface not less than 0.015 inches* * *

(e) The generic name of each cord material used in the plies (both sidewall and tread area) of the tire;* * *

(f) The actual number of plies in the sidewall, and the actual number of plies in the tread area, if different * * *

Michelin explains that the noncompliance is that, due to a mold labeling error, the sidewall marking on the reference side of the tires incorrectly describes the number of plies in the tread area of the tires. Specifically, the tires in question were inadvertently manufactured with "Tread Plies: 2 Polyester + **2 polyamide** + 2 steel; Sidewall plies: 2 polyester" marked on the intended outboard sidewall. The labeling should have been "Tread Plies: 2 Polyester + **1 polyamide** + 2 steel; Sidewall plies: 2 polyester" (emphasis added). Michelin also explains that the marking on the other sidewall of the tires correctly describes the plies in the tread area of the tires.

Michelin states that it discovered the mold labeling error that caused the non-compliance during a routine quality audit.

Michelin argues that this noncompliance is inconsequential to motor vehicle safety because the noncompliant sidewall marking does not affect the strength of the tires and all other labeling requirements have been met.

Michelin points out that NHTSA has previously granted petitions for sidewall marking noncompliances that Michelin believes are similar to the instant noncompliance.

Michelin also stated that it has corrected the problem that caused these

errors so that they will not be repeated in future production.

In summation, Michelin states that it believes that because the noncompliances are inconsequential to motor vehicle safety that no corrective action is warranted.

NHTSA Decision

The agency agrees with Michelin that the noncompliances are inconsequential to motor vehicle safety. The agency believes that the true measure of inconsequentiality to motor vehicle safety in this case is that there is no effect of the noncompliances on the operational safety of vehicles on which these tires are mounted. The safety of people working in the tire retread, repair, and recycling industries must also be considered. Although tire construction affects the strength and durability, neither the agency nor the tire industry provides information relating tire strength and durability to the number of plies and types of ply cord material in the tread and sidewall. Therefore, tire dealers and customers should consider the tire construction information along with other information such as the load capacity, maximum inflation pressure, and tread wear, temperature, and traction ratings, to assess performance capabilities of various tires. In the agency's judgment, the incorrect labeling of the tire construction information will have an inconsequential effect on motor vehicle safety because most consumers do not base tire purchases or vehicle operation parameters on the ply material in a tire.

The agency also believes the noncompliance will have no measurable effect on the safety of the tire retread, repair, and recycling industries. The use of steel cord construction in the sidewall and tread is the primary safety concern of these industries. In this case, since the tire sidewalls are marked correctly for the number of steel plies, this potential safety concern does not exist.

In consideration of the foregoing, NHTSA has decided that Michelin has met its burden of persuasion that the subject FMVSS No. 139 labeling noncompliances are inconsequential to motor vehicle safety. Accordingly, Michelin's petition is granted and the petitioner is exempted from the obligation of providing notification of, and a remedy for, the subject noncompliance under 49 U.S.C. 30118 and 30120.

Authority: 49 U.S.C. 30118, 30120; delegations of authority at 49 CFR 1.50 and 501.8.

Issued on: April 1, 2010.

Claude H. Harris,

Director, Office of Vehicle Safety Compliance.

[FR Doc. 2010–7875 Filed 4–6–10; 8:45 am]

BILLING CODE 4910–59–P

DEPARTMENT OF TRANSPORTATION

Federal Highway Administration

[FHWA Docket No. FHWA–2005–23112]

Motorcyclist Advisory Council to the Federal Highway Administration

AGENCY: Federal Highway Administration (FHWA), DOT.

ACTION: Notice of meeting of advisory committee.

SUMMARY: This document announces the eighth meeting of the Motorcyclist Advisory Council to the Federal Highway Administration (MAC–FHWA). The purpose of this meeting is to advise the Secretary of Transportation, through the Administrator of the FHWA, on infrastructure issues of concern to motorcyclists, including: (1) Barrier design; (2) road design, construction, and maintenance practices; and (3) the architecture and implementation of intelligent transportation system technologies, pursuant to section 1914 of the Safe, Accountable, Flexible, Efficient Transportation Equity Act: A Legacy for Users (SAFETEA–LU).

DATES: The eighth meeting of the MAC–FHWA is scheduled for May 13 from 9 a.m. until 5 p.m. This meeting will be the final meeting of the MAC–FHWA under the SAFETEA–LU Authorization.

ADDRESSES: The eighth MAC–FHWA meeting will be held at the Crystal City Marriott, 1999 Jefferson Davis Highway, Arlington, VA 22202.

FOR FURTHER INFORMATION CONTACT: Mr. Michael Griffith, the Designated Federal Official, Office of Safety, (202) 366–2288, *mike.griffith@dot.gov,* or Mr. Keith D. Williams, Office of Safety, (202) 366–9212, *keith.williams@dot.gov,* FHWA, 1200 New Jersey Avenue, SE., Washington, DC 20590.

SUPPLEMENTARY INFORMATION

Background

On August 10, 2005, the President signed into law the Safe, Accountable, Flexible, Efficient Transportation Equity Act: A Legacy for Users (SAFETEA–LU) (Pub. L. 109–59, 119 Stat. 1144). Section 1914 of SAFETEA–LU mandates the establishment of the Motorcyclist Advisory Council as follows: "The Secretary, acting through the Administrator of the Federal Highway Administration, in consultation with the Committee on Transportation and Infrastructure of the House of Representatives and the Committee on Environment and Public Works of the Senate, shall appoint a Motorcyclist Advisory Council to coordinate with and advise the Administrator on infrastructure issues of concern to motorcyclists, including—

(1) Barrier design;

(2) Road design, construction, and maintenance practices; and

(3) The architecture and implementation of intelligent transportation system technologies."

In addition, section 1914 specifies the membership of the council: "The Council shall consist of not more than 10 members of the motorcycling community with professional expertise in national motorcyclist safety advocacy, including—

(1) At least—

(A) One member recommended by a national motorcyclist association;

(B) One member recommended by a national motorcycle rider's foundation;

(C) One representative of the National Association of State Motorcycle Safety Administrators;

(D) Two members of State motorcyclists' organizations;

(E) One member recommended by a national organization that represents the builders of highway infrastructure;

(F) One member recommended by a national association that represents the traffic safety systems industry; and

(G) One member of a national safety organization; and

(2) At least one, and not more than two, motorcyclists who are traffic system design engineers or State transportation department officials."

To carry out this requirement, the FHWA published a notice of intent to form an advisory committee in the **Federal Register** on December 23, 2005 (70 FR 76353). This notice, consistent with the requirements of the Federal Advisory Committee Act, announced the establishment of the Council and invited comments and nominations for membership. The MAC–FHWA was officially chartered for a 2-year period on July 31, 2006, and was extended by act of the Secretary for an additional 2-year term. That extension expires on July 31, 2010. The FHWA announced the ten members selected to the Council in the **Federal Register** on October 5, 2006 (71 FR 58903). An electronic copy of this document and the previous **Federal Register** notices associated with the MAC–FHWA can be downloaded through the Federal eRulemaking Portal at: *http://www.regulations.gov* and the Office of the Federal Register's home

page at: *http://www.archives.gov/federal_register.*

The FHWA anticipates that the MAC–FHWA will meet at least once a year, with meetings held in the Washington, DC, metropolitan area and the FHWA will publish notices in the **Federal Register** to announce the times, dates, and locations of these meetings. Meetings of the Council are open to the public and time will be provided in each meeting's schedule for comments by members of the public. Attendance will necessarily be limited by the size of the meeting room. Members of the public may present oral or written comments at the meeting or may present written materials by providing copies to Ms. Fran Bents, Westat, 1650 Research Boulevard, Rockville, MD 20850–3195, (240) 314–7557, ten (10) days prior to the meeting.

The agenda topics for the meetings will include a discussion of the following issues: (1) Barrier design; (2) road design, construction, and maintenance practices; and (3) the architecture and implementation of intelligent transportation system technologies.

Conclusion

The eighth meeting of the Motorcyclist Advisory Council to the Federal Highway Administration will be held on May 13, 2010, at the Crystal City Marriott, 1999 Jefferson Davis Highway, Arlington, VA 22202 from 9 a.m. until 5 p.m.

(Authority: Section 1914 of Pub. L. 109–59; Public L. 92–463, 5 U.S.C., App. II § 1)

Issued on: March 29, 2010.

Victor M. Mendez,

Administrator.

[FR Doc. 2010–7777 Filed 4–6–10; 8:45 am]

BILLING CODE 4910–22–P

DEPARTMENT OF TRANSPORTATION

National Highway Traffic Safety Administration

[Docket No. NHTSA–2010–0024; Notice 1]

Continental Tire North America, Inc., Receipt of Petition for Decision of Inconsequential Noncompliance

Continental Tire North America, Inc.,(Continental), has determined that certain passenger car tires manufactured between March of 2007 and June of 2009 did not fully comply with paragraphs S5.5(e) and S5.5(f) of Federal Motor Vehicle Safety Standards (FMVSS) No. 139, *New Pneumatic Radial Tires for Light Vehicles.* Continental has filed an appropriate report pursuant to 49 CFR Part 573, *Defect and Noncompliance Responsibility and Reports.*

Pursuant to 49 U.S.C. 30118(d) and 30120(h) (*see* implementing rule at 49 CFR part 556), Continental has petitioned for an exemption from the notification and remedy requirements of 49 U.S.C. Chapter 301 on the basis that this noncompliance is inconsequential to motor vehicle safety.

This notice of receipt of Continental's petition is published under 49 U.S.C. 30118 and 30120 and does not represent any agency decision or other exercise of judgment concerning the merits of the petition.

Affected are approximately 28,169 size 235/55R18 100V SL Continental brand CrossContact UHP model passenger car tires manufactured between March of 2007 and June of 2009 at Continental's plant located in Otrokovice, Czech Republic. A total of 8,858 of these tires have been delivered to Continental's customers. The remaining tires (approximately 19,311) are being held in Continental's possession until they can be correctly relabeled.

NHTSA notes that the statutory provisions (49 U.S.C. 30118(d) and 30120(h)) that permit manufacturers to file petitions for a determination of inconsequentiality allow NHTSA to exempt manufacturers only from the duties found in sections 30118 and 30120, respectively, to notify owners, purchasers, and dealers of a defect or noncompliance and to remedy the defect or noncompliance. Therefore, these provisions only apply to the tires that have already passed from the manufacturer to an owner, purchaser, or dealer.

Paragraphs S5.5(e) and S5.5(f) of FMVSS No. 139 require in pertinent part:

S5.5 Tire markings. Except as specified in paragraphs (a) through (i) of S5.5, each tire must be marked on each sidewall with the information specified in S5.5(a) through (d) and on one sidewall with the information specified in S5.5(e) through (i) according to the phase-in schedule specified in S7 of this standard. The markings must be placed between the maximum section width and the bead on at least one sidewall, unless the maximum section width of the tire is located in an area that is not more than one-fourth of the distance from the bead to the shoulder of the tire. If the maximum section width falls within that area, those markings must appear between the bead and a point one-half the distance from the bead to the shoulder of the tire, on at least one sidewall. The markings must be in letters and numerals not less than 0.078 inches high and raised above or sunk below the tire surface not less than 0.015 inches * * *

(e) The generic name of each cord material used in the plies (both sidewall and tread area) of the tire;

(f) The actual number of plies in the sidewall, and the actual number of plies in the tread area, if different * * *

Continental explains that the noncompliance is that, due to a mold stamping anomaly, the sidewall marking on the tires incorrectly describes the actual generic name and number of the body plies. Specifically, the tires in question were inadvertently manufactured with "TREAD 6 PLIES: 2 POLYESTER + 2 STEEL + 2 NYLON; SIDEWALL 2 PLY POLYESTER." The labeling should have been "TREAD 5 PLIES: 1 RAYON + 2 STEEL + 2 NYLON; SIDEWALL 1 PLY RAYON." Continental states that all other sidewall identification markings and safety information are correct.

Continental states that it discovered the mold stamping problem that caused the non-compliance during a specification change.

Continental argues that this non-compliant sidewall marking is inconsequential to motor vehicle safety as it "does not affect the safety, performance and durability of the tire; the tires were built as designed." In addition, Continental states that the tires comply with all other NHTSA requirements.

Continental said that it performs ongoing compliance testing "to assure tire performance" and that "all tires included in this petition will meet or exceed the performance requirements of FMVSS 139." Continental further states that "there will be no operational impact on the performance or safety of vehicles on which these tires are mounted."

Continental points out that NHTSA has previously granted similar petitions for non-compliances in sidewall marking.

Continental also stated that it has corrected the problem that caused these errors so that they will not be repeated in future production.

In summation, Continental states that it believes that because the noncompliances are inconsequential to motor vehicle safety that no corrective action is warranted.

Interested persons are invited to submit written data, views, and arguments on this petition. Comments must refer to the docket and notice number cited at the beginning of this notice and be submitted by any of the following methods:

a. *By mail addressed to:* U.S. Department of Transportation, Docket Operations, M–30, West Building Ground Floor, Room W12–140, 1200

New Jersey Avenue, SE., Washington, DC 20590.

b. *By hand delivery to:* U.S. Department of Transportation, Docket Operations, M–30, West Building Ground Floor, Room W12–140, 1200 New Jersey Avenue, SE., Washington, DC 20590. The Docket Section is open on weekdays from 10 am to 5 pm except Federal Holidays.

c. *Electronically:* by logging onto the Federal Docket Management System (FDMS) Web site at *http://www.regulations.gov/*. Follow the online instructions for submitting comments. Comments may also be faxed to 1–202–493–2251.

Comments must be written in the English language, and be no greater than 15 pages in length, although there is no limit to the length of necessary attachments to the comments. If comments are submitted in hard copy form, please ensure that two copies are provided. If you wish to receive confirmation that your comments were received, please enclose a stamped, self-addressed postcard with the comments. Note that all comments received will be posted without change to *http://www.regulations.gov*, including any personal information provided.

Anyone is able to search the electronic form of all comments received into any of our dockets by the name of the individual submitting the comment (or signing the comment, if submitted on behalf of an association, business, labor union, etc.). DOT's complete Privacy Act Statement in the **Federal Register** was published on April 11, 2000 (65 FR 19477–78).

You may view documents submitted to a docket at the address and times given above. You may also view the documents on the Internet at *http://www.regulations.gov* by following the online instructions for accessing the dockets available at that Web site.

The petition, supporting materials, and all comments received before the close of business on the closing date indicated below will be filed and will be considered. All comments and supporting materials received after the closing date will also be filed and will be considered to the extent possible. When the petition is granted or denied, notice of the decision will be published in the **Federal Register** pursuant to the authority indicated below.

Dates: Comment closing date: May 7, 2010.

Authority: (49 U.S.C. 30118, 30120: delegations of authority at CFR 1.50 and 501.8).

Issued on: April 1, 2010.

Claude H. Harris,

Director, Office of Vehicle Safety Compliance.

[FR Doc. 2010–7870 Filed 4–6–10; 8:45 am]

BILLING CODE 4910–59–P

DEPARTMENT OF TRANSPORTATION

National Highway Traffic Safety Administration

[DOT Docket Number NHTSA–2010–0010]

Reports, Forms, and Recordkeeping Requirements

AGENCY: National Highway Traffic Safety Administration (NHTSA), Department of Transportation.

ACTION: Request for public comment on extension of a currently approved collection of information.

SUMMARY: In compliance with the Paperwork Reduction Act of 1995 (44 U.S.C. 3501 *et seq.*), this notice announces that the Information Collection Request (ICR) abstracted below has been forwarded to the Office of Management and Budget (OMB) for review and comment. The ICR describes the nature of the information collection and their expected burden. The **Federal Register** notice with a 60-day comment period was published on January 27, 2010 (75 FR 4447).

DATES: Comments must be submitted to OMB on or before May 7, 2010.

ADDRESSES: Comments must refer to the OMB control number, 2127–0052, and be sent to the Office of Information and Regulatory Affairs, Office of Management and Budget, 725 17th Street, NW., Washington, DC 20503, Attention NHTSA Desk Officer.

FOR FURTHER INFORMATION CONTACT: Mr. Jeffrey M. Woods, NHTSA, 1200 New Jersey Avenue, SE., Room W43–467, NVS–122, Washington, DC 20590. Mr. Woods' telephone number is (202) 366–6206.

SUPPLEMENTARY INFORMATION: Under the Paperwork Reduction Act of 1995, before an agency submits a proposed collection of information to OMB for approval, it must first publish a document in the **Federal Register** providing a 60-day comment period and otherwise consult with members of the public and affected agencies concerning each proposed collection of information. The 60-day notice was published on January 27, 2010 (75 FR 4447) and no comments were received. Therefore, the Information Collection Request (ICR) abstracted below has been forwarded to the Office of Management and Budget (OMB) for review and comment.

Title: Brake Hose Manufacturers Identification, Federal Motor Vehicle Safety Standard (FMVSS) No. 106.

OMB Control Number: 2127–0052.

Form Number: This collection of information uses no standard form.

Type of Request: Extension of a currently approved collection of information.

Abstract: 49 U.S.C. 30101 *et seq.,* as amended ("the Safety Act"), authorizes NHTSA to issue Federal Motor Vehicle Safety Standards (FMVSS). The Safety Act mandates that in issuing any Federal motor vehicle safety standards, the agency is to consider whether the standard is reasonable and appropriate for the particular type of motor vehicle or item of motor vehicle equipment for which it is prescribed. Using this authority, FMVSS No. 106, Brake Hoses, was issued. This standard specifies labeling and performance requirements which apply to all manufacturers of brake hoses and brake hose end fittings, and to those who assemble brake hoses. Prior to assembling or selling brake hoses, these entities must register their identification marks with NHTSA to comply with the labeling requirements of this standard. In accordance with the Paperwork Reduction Act, the agency must obtain OMB approval to continue collecting labeling information.

Currently, there are 1,944 manufacturers of brake hoses and end fittings, and brake hose assemblers, registered with NHTSA. However, only approximately 20 respondents annually request to have their symbol added to or removed from the NHTSA database. To comply with this standard, each brake hose manufacturer or assembler must contact NHTSA and state that they want to be added to or removed from the NHTSA database of registered brake hose manufacturers. This action is usually initiated by the manufacturer with a brief written request via U.S. mail, facsimile, an e-mail message, or a telephone call. Currently, a majority of the requests are received via U.S. mail and the follow-up paperwork is conducted via facsimile, U.S. mail, or electronic mail. The estimated cost for complying with this regulation is $100 per hour. Therefore, the total annual cost is estimated to be $3,000 (time burden of 30 hours × $100 cost per hour).

Affected Public: Business or other for profit.

Estimated Annual Burden: 30 hours.

Estimated Number of Respondents: 20.

Comments are invited on: whether the proposed collection of information is necessary for the proper performance of the functions of the Department,

including whether the information will have practical utility; the accuracy of the Department's estimate of the burden of the proposed information collection; ways to enhance the quality, utility and clarity of the information to be collected; and ways to minimize the burden of the collection of information on respondents, including the use of automated collection techniques or other forms of information technology.

A comment to OMB is most effective if OMB receives it within 30 days of publication.

Issued on: April 1, 2010.

Stephen R. Kratzke,

Associate Administrator for Rulemaking.

[FR Doc. 2010–7862 Filed 4–6–10; 8:45 am]

BILLING CODE 4910–59–P

DEPARTMENT OF THE TREASURY

United States Mint

Pricing for 2010 Lincoln One-Cent Coin Two-Roll Set

AGENCY: United States Mint, Department of the Treasury.

ACTION: Notice.

SUMMARY: The United States Mint is announcing the price of the 2010 Lincoln One-Cent Coin Two-Roll Set.

The 2010 Lincoln One-Cent Coin Two-Roll Set will be priced at $8.95. This set will contain rolls of coins struck at both the United States Mint facilities at Philadelphia and at Denver, and will be released on April 8, 2010.

FOR FURTHER INFORMATION CONTACT: B. B. Craig, Associate Director for Sales and Marketing; United States Mint; 801 9th Street NW., Washington, DC 20220; or call 202–354–7500.

Authority: 31 U.S.C. 5111, 5112 & 9701.

Dated: April 1 2010.

Edmund C. Moy,

Director, United States Mint.

[FR Doc. 2010–7852 Filed 4–6–10; 8:45 am]

BILLING CODE 4810–37–P

DEPARTMENT OF VETERANS AFFAIRS

[OMB Control No. 2900–0021]

Proposed Information Collection (VA Loan Electronic Reporting Interface (VALERI) System) Activity: Comment Request

AGENCY: Veterans Benefits Administration, Department of Veterans Affairs.

ACTION: Notice.

SUMMARY: The Veterans Benefits Administration (VBA), Department of Veterans Affairs (VA), is announcing an opportunity for public comment on the proposed collection of certain information by the agency. Under the Paperwork Reduction Act (PRA) of 1995, Federal agencies are required to publish notice in the Federal Register concerning each proposed collection of information, including each proposed revision of a currently approved collection, and allow 60 days for public comment in response to the notice. This notice solicits comments for information needed to oversee loan holders processing of loan guaranty homes.

DATES: Written comments and recommendations on the proposed collection of information should be received on or before June 7, 2010.

ADDRESSES: Submit written comments on the collection of information through the Federal Docket Management System (FDMS) at *www.Regulations.gov* or to Nancy J. Kessinger, Veterans Benefits Administration (20M35), Department of Veterans Affairs, 810 Vermont Avenue, NW., Washington, DC 20420 or e-mail *nancy.kessinger@va.gov.* Please refer to "OMB Control No. 2900–0021" in any correspondence. During the comment period, comments may be viewed online through FDMS.

FOR FURTHER INFORMATION CONTACT: Nancy J. Kessinger at (202) 461–9769 or FAX (202) 275–5947.

SUPPLEMENTARY INFORMATION: Under the PRA of 1995 (Pub. L. 104–13; 44 U.S.C. 3501—3521), Federal agencies must obtain approval from the Office of Management and Budget (OMB) for each collection of information they conduct or sponsor. This request for comment is being made pursuant to Section 3506(c)(2)(A) of the PRA.

With respect to the following collection of information, VBA invites comments on: (1) Whether the proposed collection of information is necessary for the proper performance of VBA's functions, including whether the information will have practical utility; (2) the accuracy of VBA's estimate of the burden of the proposed collection of information; (3) ways to enhance the quality, utility, and clarity of the information to be collected; and (4) ways to minimize the burden of the collection of information on respondents, including through the use of automated collection techniques or the use of other forms of information technology.

Title: VA Loan Electronic Reporting Interface (VALERI) System.

OMB Control Number: 2900–0021.

Type of Review: Revision of a currently approved collection.

Abstract: VA will use the Information submitted through the VALERI system to perform supplemental servicing, determination on forbearance, foreclosure, protection of property and initiation of claim payment on loan guaranty homes.

Affected Public: Business or other for profit.

Estimated Annual Burden: 70 hours.

Estimated Average Burden Per Respondent: 1 second.

Frequency of Response: Daily.

Estimated Number of Respondents: 260.

Estimated Number of Responses: 967.

Dated: April 1, 2010.

By direction of the Acting Secretary.

Denise McLamb,

Program Analyst, Enterprise Records Service.

[FR Doc. 2010–7773 Filed 4–6–10; 8:45 am]

BILLING CODE 8320–01–P

DEPARTMENT OF VETERANS AFFAIRS

[OMB Control No. 2900–0162]

Proposed Information Collection (Monthly Certification of Flight Training) Activity: Comment Request

AGENCY: Veterans Benefits Administration, Department of Veterans Affairs.

ACTION: Notice.

SUMMARY: The Veterans Benefits Administration (VBA), Department of Veterans Affairs (VA), is announcing an opportunity for public comment on the proposed collection of certain information by the agency. Under the Paperwork Reduction Act (PRA) of 1995, Federal agencies are required to publish notice in the **Federal Register** concerning each proposed collection of information, including each proposed extension of a currently approved collection and allow 60 days for public comment in response to the notice. This notice solicits comments on information needed to ensure that the amount of benefits payable to a student pursuing flight training is correct.

DATES: Written comments and recommendations on the proposed collection of information should be received on or before June 7, 2010.

ADDRESSES: Submit written comments on the collection of information through Federal Docket Management System (FDMS) at *www.Regulations.gov* or to Nancy J. Kessinger, Veterans Benefits Administration (20M35), Department of Veterans Affairs, 810 Vermont Avenue,

NW., Washington, DC 20420 or e-mail *nancy.kessinger@va.gov.* Please refer to "OMB Control No. 2900–0162" in any correspondence. During the comment period, comments may be viewed online through the FDMS.

FOR FURTHER INFORMATION CONTACT: Nancy J. Kessinger at (202) 461–9769 or FAX (202) 275–5947.

SUPPLEMENTARY INFORMATION: Under the PRA of 1995 (Pub. L.104–13; 44 U.S.C. 3501–3521), Federal agencies must obtain approval from the Office of Management and Budget (OMB) for each collection of information they conduct or sponsor. This request for comment is being made pursuant to Section 3506(c)(2)(A) of the PRA.

With respect to the following collection of information, VBA invites comments on: (1) Whether the proposed collection of information is necessary for the proper performance of VBA's functions, including whether the information will have practical utility; (2) the accuracy of VBA's estimate of the burden of the proposed collection of information; (3) ways to enhance the quality, utility, and clarity of the information to be collected; and (4) ways to minimize the burden of the collection of information on respondents, including through the use of automated collection techniques or the use of other forms of information technology.

Title: Monthly Certification of Flight Training, VA Form 22–6553c.

OMB Control Number: 2900–0162.

Type of Review: Extension of a currently approved collection.

Abstract: Veterans, individuals on active duty training and reservist training, may receive benefits for enrolling in or pursuing approved vocational flight training. VA Form 22–6553c serves as a report of flight training pursued and termination of such training. Payments are base on the number of hours of flight training completed during each month.

Affected Public: Individuals or households.

Estimated Annual Burden: 4,017 hours.

Estimated Average Burden Per Respondent: 30 minutes.

Frequency of Response: On occasion.

Estimated Number of Respondents: 1,339

Estimated Total Annual Responses: 8,034.

Dated: April 1, 2010.

By direction of the Secretary.

Denise McLamb,

Program Analyst, Enterprise Records Service.

[FR Doc. 2010–7774 Filed 4–6–10; 8:45 am]

BILLING CODE P

Federal Register

Wednesday,
April 7, 2010

Part II

The President

Proclamation 8488—Census Day, 2010

Proclamation 8489—National Cancer Control Month, 2010

Proclamation 8490—National Child Abuse Prevention Month, 2010

Proclamation 8491—National Donate Life Month, 2010

Proclamation 8492—National Sexual Assault Awareness Month, 2010

Federal Register
Vol. 75, No. 66
Wednesday, April 7, 2010

Presidential Documents

Title 3—

The President

Proclamation 8488 of March 31, 2010

Census Day, 2010

By the President of the United States of America

A Proclamation

Since our Nation's earliest days, the census has played an important role in identifying where resources are most needed. This procedure, enshrined in our Constitution, informs our Government's responses to the evolving needs of American communities. By completing this year's survey, we can ensure they receive adequate funding for schools, hospitals, senior centers, and other public works projects. The 2010 Census will also aid employers in selecting locations for new factories and businesses as our economy recovers. On Census Day, I urge all Americans to fulfill their civic duty by participating in the 2010 Census.

While the first United States census surveyed a young country with fewer than 4 million people, this year's census will assess a Nation of over 300 million. America's diversity defines our national character, yet, in the past, the census has too often undercounted minorities, young people, and low-income residents. As our Nation grows, getting the count right will help ensure that our families and neighbors receive the services they need, and accurate and proportional representation in the United States House of Representatives.

The 2010 Census is safe and easy to complete, and the Census Bureau aggressively protects all census participants' private information, which is never used against them or shared with other government or private entities. By mailing the Census form back, we help save taxpayer dollars and ensure that all Americans get the support they deserve and a voice in our democracy.

NOW, THEREFORE, I, BARACK OBAMA, President of the United States of America, by virtue of the authority vested in me by the Constitution and laws of the United States, do hereby proclaim April 1, 2010, as Census Day. I call upon all Americans to observe this day by completing their census form and mailing it back.

IN WITNESS WHEREOF, I have hereunto set my hand this thirty-first day of March, in the year of our Lord two thousand ten, and of the Independence of the United States of America the two hundred and thirty-fourth.

[FR Doc. 2010–8018
Filed 4–6–10; 8:45 am]
Billing code 3195–W0–P

Presidential Documents

Proclamation 8489 of April 1, 2010

National Cancer Control Month, 2010

By the President of the United States of America

A Proclamation

Cancer is among the leading causes of death in our country, taking over half a million American lives in the past year alone. This illness has stricken countless individuals and families in communities across our Nation, but the future holds untold promise. We continue to make monumental strides in managing and understanding cancer, and rates of new cases and deaths have declined for men and women overall in recent years. During National Cancer Control Month, let us renew our commitment to combat this disease by raising awareness and supporting the development of life-saving treatments.

With simple, everyday activities, we all can take steps to protect ourselves and our loved ones from cancer. Americans should discuss preventive care with a health professional. Getting regular check-ups and screenings can help reduce the risk of developing certain cancers and help detect cancer early, when it is most treatable. Changing unhealthy habits can often help prevent cancer before it forms. By limiting sun exposure and alcohol consumption, avoiding tobacco, exercising regularly, and maintaining a nutritious diet, we can each reduce our risk of developing cancer. I encourage all who are struggling to quit smoking to visit SmokeFree.gov for resources and information.

My Administration is committed to supporting every American who is fighting cancer, and we have invested in innovative research through the National Institutes of Health to develop more effective treatments. While cancer affects people of every background and economic status, disparities exist between races, ethnicities, and incomes regarding the likelihood of survival. Community cancer centers will play an important role in closing these gaps and bringing hope to underserved citizens.

Like too many Americans, I know the pain of losing a loved one to cancer, and I carry the memory of my mother's courage with me each day. Inspired by the stories and tenacity of patients and survivors, and guided by our love for those we have lost, we will one day triumph over this devastating illness.

The Congress of the United States, by joint resolution approved March 28, 1938 (52 Stat. 148; 36 U.S.C. 103), as amended, has requested the President to issue an annual proclamation declaring April as "Cancer Control Month."

NOW, THEREFORE, I, BARACK OBAMA, President of the United States of America, do hereby proclaim April 2010 as National Cancer Control Month. I call upon citizens, government agencies, organizations, health care providers, and research institutions to raise cancer awareness and continue helping Americans live longer, healthier lives.

IN WITNESS WHEREOF, I have hereunto set my hand this first day of April, in the year of our Lord two thousand ten, and of the Independence of the United States of America the two hundred and thirty-fourth.

[FR Doc. 2010–8021
Filed 4–6–10; 8:45 am]
Billing code 3195–W0–P

Presidential Documents

Proclamation 8490 of April 1, 2010

National Child Abuse Prevention Month, 2010

By the President of the United States of America

A Proclamation

Our children are our most valuable resource, and they need our support to thrive and grow into healthy, productive adults. During National Child Abuse Prevention Month, we renew our unwavering commitment to protecting children and responding to child abuse, promoting healthy families, and building a brighter future for all Americans.

Every child deserves a nurturing family and a safe environment, free from fear, abuse, and neglect. Tragically, sexual, emotional, and physical abuse threaten too many children every day in communities across our Nation. Parents, guardians, relatives, and neighbors all share a responsibility to prevent these devastating crimes, and our government plays a critical role as well.

My Administration is committed to helping future generations succeed. We are focused on engaging parents in their children's early learning and development, ensuring the safety and well-being of all families, and creating opportunities for all Americans. We are also partnering with Federal, State, and local agencies to better coordinate early childhood services and improve the lives of young children and their families.

Together, we can ensure that every child grows up in a safe, stable, and nurturing environment, free from abuse and neglect. I encourage all Americans to visit: www.ChildWelfare.gov/Preventing to learn what they can do to stop child abuse in their communities.

NOW, THEREFORE, I, BARACK OBAMA, President of the United States of America, by virtue of the authority vested in me by the Constitution and laws of the United States, do hereby proclaim April 2010 as National Child Abuse Prevention Month. I call upon all Americans to observe this month with programs and activities that help prevent child abuse and provide for children's physical, emotional, and developmental needs.

IN WITNESS WHEREOF, I have hereunto set my hand this first day of April, in the year of our Lord two thousand ten, and of the Independence of the United States of America the two hundred and thirty-fourth.

[FR Doc. 2010–8022
Filed 4–6–10; 8:45 am]
Billing code 3195–W0–P

Presidential Documents

Proclamation 8491 of April 1, 2010

National Donate Life Month, 2010

By the President of the United States of America

A Proclamation

As Americans, we can demonstrate our commitment to one another in the most difficult of circumstances through organ, tissue, stem cell, and blood donation. During National Donate Life Month, we honor donors who provide others with a second chance for a healthy life and encourage more Americans to share this precious gift.

Today, over 100,000 Americans await donation on the Organ Procurement and Transplantation Network waiting list. Many will receive a lifesaving transplant, but, for some, help will not come fast enough. Whether they are coping with kidney failure or recovering from severe injuries, these individuals' lives depend on the compassion of a loved one or a complete stranger. Across our country, we face a shortage of donors and an urgent need for help. We must respond with the spirit of generosity that has always defined our national character.

Each organ or tissue donor can save many lives, and becoming one is simple: join your State's donor registry, indicate your decision on your driver's license, and inform loved ones of your decision. There is no age limit for donors, and because some conditions and blood types are more common in certain ethnic and racial populations, the Department of Health and Human Services especially encourages minorities to consider donation.

Visit OrganDonor.gov to learn more about the urgent need for donors and to find resources on how to donate. Together, we can save lives and give hope to countless American families.

NOW, THEREFORE, I, BARACK OBAMA, President of the United States of America, by virtue of the authority vested in me by the Constitution and the laws of the United States, do hereby proclaim April 2010 as National Donate Life Month. I call upon health care professionals, volunteers, educators, government agencies, faith-based and community groups, and private organizations to join forces to boost the number of organ, tissue, blood, and stem cell donors throughout our Nation.

IN WITNESS WHEREOF, I have hereunto set my hand this first day of April, in the year of our Lord two thousand ten, and of the Independence of the United States of America the two hundred and thirty-fourth.

[FR Doc. 2010–8026
Filed 4–6–10; 8:45 am]
Billing code 3195–W0–P

Presidential Documents

Proclamation 8492 of April 1, 2010

National Sexual Assault Awareness Month, 2010

By the President of the United States of America

A Proclamation

Every day, women, men, and children across America suffer the pain and trauma of sexual assault. From verbal harassment and intimidation to molestation and rape, this crime occurs far too frequently, goes unreported far too often, and leaves long-lasting physical and emotional scars. During National Sexual Assault Awareness Month, we recommit ourselves not only to lifting the veil of secrecy and shame surrounding sexual violence, but also to raising awareness, expanding support for victims, and strengthening our response.

Sexual violence is an affront to our national conscience, one which we cannot ignore. It disproportionately affects women—an estimated one in six American women will experience an attempted or completed rape at some point in her life. Too many men and boys are also affected.

These facts are deeply troubling, and yet, sexual violence affects Americans of all ages, backgrounds, and circumstances. Alarming rates of sexual violence occur among young women attending college, and frequently, alcohol or drugs are used to incapacitate the victim. Among people with disabilities, isolation may lead to repeated assaults and an inability to seek and locate help. Native American women are more than twice as likely to be sexually assaulted compared with the general population. As a Nation, we share the responsibility for protecting each other from sexual assault, supporting victims when it does occur, and bringing perpetrators to justice.

We can lead this charge by confronting and changing insensitive attitudes wherever they persist. Survivors too often suffer in silence because they fear further injury, are unwilling to experience further humiliation, or lack faith in the criminal justice system. This feeling of isolation, often compounded with suicidal feelings, depression, and post-traumatic stress disorder, only exacerbate victims' sense of hopelessness. No one should face this trauma alone, and as families, friends, and mentors, we can empower victims to seek the assistance they need.

At the Federal, State, local, and tribal level, we must work to provide necessary resources to victims of every circumstance, including medical attention, mental health services, relocation and housing assistance, and advocacy during legal proceedings. Under Vice President Biden's leadership, the 2005 reauthorization of the Violence Against Women Act included the Sexual Assault Services Program, the first-ever funding stream dedicated solely to providing direct services to victims of sexual assault. To further combat sexual violence, my 2011 Budget doubles funding for this program. Through the Justice Department and the Centers for Disease Control, we are funding prevention and awareness campaigns as well as grants for campus services to address sexual assault on college campuses. The Justice Department has also increased funding and resources to combat violence against Native American women.

As we continue to confront this crime, let us reaffirm this month our dedication to take action in our communities and stop abuse before it

starts. Together, we can increase awareness about sexual violence, decrease its frequency, punish offenders, help victims, and heal lives.

NOW, THEREFORE, I, BARACK OBAMA, President of the United States of America, by virtue of the authority vested in me by the Constitution and the laws of the United States, do hereby proclaim April 2010 as National Sexual Assault Awareness Month. I urge all Americans to reach out to victims, learn more about this crime, and speak out against it.

IN WITNESS WHEREOF, I have hereunto set my hand this first day of April, in the year of our Lord two thousand ten, and of the Independence of the United States of America the two hundred and thirty-fourth.

[FR Doc. 2010–8028
Filed 4–6–10; 8:45 am]
Billing code 3195–W0–P

Reader Aids

Federal Register

Vol. 75, No. 66

Wednesday, April 7, 2010

CUSTOMER SERVICE AND INFORMATION

Federal Register/Code of Federal Regulations	
General Information, indexes and other finding aids	**202–741–6000**
Laws	**741–6000**
Presidential Documents	
Executive orders and proclamations	**741–6000**
The United States Government Manual	**741–6000**
Other Services	
Electronic and on-line services (voice)	**741–6020**
Privacy Act Compilation	**741–6064**
Public Laws Update Service (numbers, dates, etc.)	**741–6043**
TTY for the deaf-and-hard-of-hearing	**741–6086**

ELECTRONIC RESEARCH

World Wide Web

Full text of the daily Federal Register, CFR and other publications is located at: **http://www.gpoaccess.gov/nara/index.html**

Federal Register information and research tools, including Public Inspection List, indexes, and links to GPO Access are located at: **http://www.archives.gov/federal__register**

E-mail

FEDREGTOC-L (Federal Register Table of Contents LISTSERV) is an open e-mail service that provides subscribers with a digital form of the Federal Register Table of Contents. The digital form of the Federal Register Table of Contents includes HTML and PDF links to the full text of each document.

To join or leave, go to **http://listserv.access.gpo.gov** and select *Online mailing list archives, FEDREGTOC-L, Join or leave the list (or change settings);* then follow the instructions.

PENS (Public Law Electronic Notification Service) is an e-mail service that notifies subscribers of recently enacted laws.

To subscribe, go to **http://listserv.gsa.gov/archives/publaws-l.html** and select *Join or leave the list (or change settings);* then follow the instructions.

FEDREGTOC-L and **PENS** are mailing lists only. We cannot respond to specific inquiries.

Reference questions. Send questions and comments about the Federal Register system to: **fedreg.info@nara.gov**

The Federal Register staff cannot interpret specific documents or regulations.

Reminders. Effective January 1, 2009, the Reminders, including Rules Going Into Effect and Comments Due Next Week, no longer appear in the Reader Aids section of the Federal Register. This information can be found online at **http://www.regulations.gov.**

CFR Checklist. Effective January 1, 2009, the CFR Checklist no longer appears in the Federal Register. This information can be found online at **http://bookstore.gpo.gov/.**

FEDERAL REGISTER PAGES AND DATE, APRIL

16325–16640 1
16641–17024 2
17025–17280 5
17281–17554 6
17555–17846 7

CFR PARTS AFFECTED DURING APRIL

At the end of each month, the Office of the Federal Register publishes separately a List of CFR Sections Affected (LSA), which lists parts and sections affected by documents published since the revision date of each title.

3 CFR

Proclamations:
8487 17025
8488 17837
8489 17839
8490 17841
8491 17843
8492 17845

5 CFR

Proposed Rules:
532 17316

7 CFR

1 17555
3 17555
91 17281
205 17555
226 16325
319 17289
735 17555
800 17555
900 17555
916 17027
917 17027
925 17031
944 17031
948 17034
1170 17555
1435 17555
Proposed Rules:
916 17072
917 17072

9 CFR

206 16641

10 CFR

140 16645
431 17036
Proposed Rules:
51 16360
430 ..... 16958, 17075
431 ..... 17078, 17079, 17080

12 CFR

205 16580
918 17037
1261 17037
Proposed Rules:
701 17083
708a 17083
708b 17083
1203 17622
1705 17622

14 CFR

27 17041
29 17041
39 ..... 16646, 16648, 16651, 16655, 16657, 16660, 16662, 16664, 17295
67 17047
71 ..... 16329, 16330, 16331, 16333, 16335, 16336
73 17561
91 17041
121 17041
125 17041
135 17041
234 17050
Proposed Rules:
23 16676
25 16676
27 16676
29 16676
39 ..... 16361, 16683, 16685, 16689, 16696, 17084, 17086, 17630, 17632
71 ..... 17322, 17637

15 CFR

740 17052
748 17052
750 17052
762 17052
922 17055

16 CFR

Proposed Rules:
312 17089

17 CFR

190 17297

18 CFR

40 16914
284 16337

20 CFR

618 16988

21 CFR

Ch. I 16353
10 16345
524 16346
814 16347
1002 16351
1003 16351
1004 16351
1005 16351
1010 16351
1020 16351
1030 16351
1040 16351
1050 16351
Proposed Rules:
165 16363
814 16365
882 17093
890 17093

24 CFR

570 17303

27 CFR

17 16666
19 16666
20 16666
22 16666
24 16666
25 16666
26 16666
27 16666
28 16666
31 16666
40 16666
44 16666
46 16666
70 16666

28 CFR

Proposed Rules:
540 17324

30 CFR

18 17512
74 17512
75 17512

32 CFR

2004 17305

Proposed Rules:
1701 16698

33 CFR

117 17561
167 17562

Proposed Rules:
100 ....16700, 17099, 17103
150 16370
165 ....16370, 16374, 16703, 17106, 17329

34 CFR

Ch. II 16668

36 CFR

Proposed Rules:
1206 17638

37 CFR

Proposed Rules:
380 16377

38 CFR

Proposed Rules:
17 17641
51 17644
59 17641

40 CFR

9 16670
50 17004
51 ....17004, 17254
52 ....16671, 17307
70 17004
71 17004
93 17254
180 ....17564, 17566, 17571, 17573, 17579
721 16670
272 17309

Proposed Rules:
52 ....16387, 16388, 16706
98 17331
272 17332
372 17333
721 16706
761 17645

45 CFR

286 17313

47 CFR

54 17584
74 17055
78 17055

Proposed Rules:
27 17349
36 17109

49 CFR

23 16357
350 17208
385 17208
395 17208
396 17208
571 ....17590, 17604, 17605

Proposed Rules:
172 17111
173 17111
176 17111
383 16391
384 16391
390 16391
391 16391
392 16391
1244 16712

50 CFR

17 ....17062, 17466
36 16636
648 17618
665 17070
679 ....16359, 17315

Proposed Rules:
17 ....16404, 17352, 17363, 17667
223 16713
224 16713
648 16716

LIST OF PUBLIC LAWS

This is a continuing list of public bills from the current session of Congress which have become Federal laws. It may be used in conjunction with "P L U S" (Public Laws Update Service) on 202–741–6043. This list is also available online at *http://www.archives.gov/federal-register/laws.html*.

The text of laws is not published in the **Federal Register** but may be ordered in "slip law" (individual pamphlet) form from the Superintendent of Documents, U.S. Government Printing Office, Washington, DC 20402 (phone, 202–512–1808). The text will also be made available on the Internet from GPO Access at *http://www.gpoaccess.gov/plaws/index.html*. Some laws may not yet be available.

H.R. 4872/P.L. 111–152
Health Care and Education Reconciliation Act of 2010 (Mar. 30, 2010; 124 Stat. 1029)

H.R. 4957/P.L. 111–153
Federal Aviation Administration Extension Act of 2010 (Mar. 31, 2010; 124 Stat. 1084)

S. 1147/P.L. 111–154
Prevent All Cigarette Trafficking Act of 2009 (Mar. 31, 2010; 124 Stat. 1087)

Last List March 31, 2010

Public Laws Electronic Notification Service (PENS)

PENS is a free electronic mail notification service of newly enacted public laws. To subscribe, go to *http://listserv.gsa.gov/archives/publaws-l.html*

Note: This service is strictly for E-mail notification of new laws. The text of laws is not available through this service. **PENS** cannot respond to specific inquiries sent to this address.