AUTHENTICATED U.S. GOVERNMENT INFORMATION GPO

# Federal Register

9–2–10 Thursday
Vol. 75 No. 170 Sept. 2, 2010

Pages 53841–54004

The **FEDERAL REGISTER** (ISSN 0097–6326) is published daily, Monday through Friday, except official holidays, by the Office of the Federal Register, National Archives and Records Administration, Washington, DC 20408, under the Federal Register Act (44 U.S.C. Ch. 15) and the regulations of the Administrative Committee of the Federal Register (1 CFR Ch. I). The Superintendent of Documents, U.S. Government Printing Office, Washington, DC 20402 is the exclusive distributor of the official edition. Periodicals postage is paid at Washington, DC.

The **FEDERAL REGISTER** provides a uniform system for making available to the public regulations and legal notices issued by Federal agencies. These include Presidential proclamations and Executive Orders, Federal agency documents having general applicability and legal effect, documents required to be published by act of Congress, and other Federal agency documents of public interest.

Documents are on file for public inspection in the Office of the Federal Register the day before they are published, unless the issuing agency requests earlier filing. For a list of documents currently on file for public inspection, see *www.federalregister.gov.*

**The seal of the National Archives and Records Administration authenticates the Federal Register** as the official serial publication established under the Federal Register Act. Under 44 U.S.C. 1507, the contents of the **Federal Register** shall be judicially noticed.

The **Federal Register** is published in paper and on 24x microfiche. It is also available online at no charge as one of the databases on GPO Access, a service of the U.S. Government Printing Office.

The online edition of the **Federal Register**, *www.gpoaccess.gov/nara,* available through GPO Access, is issued under the authority of the Administrative Committee of the Federal Register as the official legal equivalent of the paper and microfiche editions (44 U.S.C. 4101 and 1 CFR 5.10). It is updated by 6 a.m. each day the **Federal Register** is published and includes both text and graphics from Volume 59, Number 1 (January 2, 1994) forward.

For more information about GPO Access, contact the GPO Access User Support Team, call toll free 1-888-293-6498; DC area 202-512-1530; fax at 202-512-1262; or via e-mail at *gpoaccess@gpo.gov.* The Support Team is available between 7:00 a.m. and 9:00 p.m. Eastern Time, Monday–Friday, except official holidays.

The annual subscription price for the **Federal Register** paper edition is $749 plus postage, or $808, plus postage, for a combined **Federal Register, Federal Register** Index and List of CFR Sections Affected (LSA) subscription; the microfiche edition of the **Federal Register** including the **Federal Register** Index and LSA is $165, plus postage. Six month subscriptions are available for one-half the annual rate. The prevailing postal rates will be applied to orders according to the delivery method requested. The price of a single copy of the daily **Federal Register,** including postage, is based on the number of pages: $11 for an issue containing less than 200 pages; $22 for an issue containing 200 to 400 pages; and $33 for an issue containing more than 400 pages. Single issues of the microfiche edition may be purchased for $3 per copy, including postage. Remit check or money order, made payable to the Superintendent of Documents, or charge to your GPO Deposit Account, VISA, MasterCard, American Express, or Discover. Mail to: U.S. Government Printing Office—New Orders, P.O. Box 979050, St. Louis, MO 63197-9000; or call toll free 1-866-512-1800, DC area 202-512-1800; or go to the U.S. Government Online Bookstore site, see *bookstore.gpo.gov.*

There are no restrictions on the republication of material appearing in the **Federal Register.**

**How To Cite This Publication:** Use the volume number and the page number. Example: 75 FR 12345.

**Postmaster:** Send address changes to the Superintendent of Documents, Federal Register, U.S. Government Printing Office, Washington, DC 20402, along with the entire mailing label from the last issue received.

## SUBSCRIPTIONS AND COPIES

**PUBLIC**

**Subscriptions:**

| | |
|---|---|
| Paper or fiche | **202–512–1800** |
| Assistance with public subscriptions | **202–512–1806** |

**General online information** **202–512–1530; 1–888–293–6498**

**Single copies/back copies:**

| | |
|---|---|
| Paper or fiche | **202–512–1800** |
| Assistance with public single copies | **1–866–512–1800 (Toll-Free)** |

**FEDERAL AGENCIES**

**Subscriptions:**

| | |
|---|---|
| Paper or fiche | **202–741–6005** |
| Assistance with Federal agency subscriptions | **202–741–6005** |

**FEDERAL REGISTER WORKSHOP**

**THE FEDERAL REGISTER: WHAT IT IS AND HOW TO USE IT**

FOR: Any person who uses the Federal Register and Code of Federal Regulations.

WHO: Sponsored by the Office of the Federal Register.

WHAT: Free public briefings (approximately 3 hours) to present:

1. The regulatory process, with a focus on the Federal Register system and the public's role in the development of regulations.
2. The relationship between the Federal Register and Code of Federal Regulations.
3. The important elements of typical Federal Register documents.
4. An introduction to the finding aids of the FR/CFR system.

WHY: To provide the public with access to information necessary to research Federal agency regulations which directly affect them. There will be no discussion of specific agency regulations.

WHEN: Tuesday, September 14, 2010
9 a.m.–12:30 p.m.

WHERE: Office of the Federal Register
Conference Room, Suite 700
800 North Capitol Street, NW.
Washington, DC 20002

RESERVATIONS: (202) 741–6008

Printed on recycled paper.

# Contents

**Federal Register**

Vol. 75, No. 170

Thursday, September 2, 2010

**Agriculture Department**
*See* Forest Service

**Alcohol and Tobacco Tax and Trade Bureau**
**PROPOSED RULES**
Establishment of Antelope Valley of California High Desert Viticultural Area, 53877–53883

**Children and Families Administration**
**NOTICES**
Expansion Supplements Under 2009 American Recovery and Reinvestment Act:
  Training and Technical Assistance, Community Action Partnership, 53969–53970
  Training and Technical Assistance, Community Action Program Legal Services, Inc., 53970–53971
  Training and Technical Assistance, National Association for State Community Services Programs, 53970
Meetings:
  Administration for Native Americans, 53975–53976

**Civil Rights Commission**
**NOTICES**
Meetings; Sunshine Act, 53947

**Coast Guard**
**RULES**
Security Zones:
  Mackinac Bridge, Straits of Mackinac, Michigan, 53870–53871

**Commerce Department**
*See* Industry and Security Bureau
*See* International Trade Administration
*See* National Oceanic and Atmospheric Administration

**Commission of Fine Arts**
**NOTICES**
Meetings:
  Commission of Fine Arts, 53957–53958

**Coordinating Council on Juvenile Justice and Delinquency Prevention**
**NOTICES**
Meetings, 53958

**Defense Department**
*See* Navy Department

**Drug Enforcement Administration**
**RULES**
Additions to Listing of Exempt Chemical Mixtures, 53867–53870

**Education Department**
**NOTICES**
Agency Information Collection Activities; Proposals, Submissions, and Approvals, 53959–53960

**Employment and Training Administration**
**NOTICES**
Agency Information Collection Activities; Proposals, Submissions, and Approvals:
  Benefit Appeals Report, 53983
  Nonmonetary Determination Activities Report, 53982–53983

**Energy Department**
*See* Federal Energy Regulatory Commission

**Environmental Protection Agency**
**PROPOSED RULES**
Action To Ensure Authority To Issue Permits Under the Prevention of Significant Deterioration Program to Sources of Greenhouse Gas Emissions:
  Federal Implementation Plan, 53883–53892
Actions To Ensure Authority To Issue Permits Under the Prevention of Significant Deterioration Program to Sources of Greenhouse Gas Emissions:
  Finding of Substantial Inadequacy and SIP Call, 53892–53907
Marine Sanitation Devices:
  Proposed Regulation To Establish a No Discharge Zone (NDZ) for California State Marine Waters, 53914–53925
Method 16C for the Determination of Total Reduced Sulfur Emissions From Stationary Sources, 53908–53914
Revisions to Arizona State Implementation Plan, Maricopa County, 53907–53908

**Farm Credit System Insurance Corporation**
**NOTICES**
Meetings:
  Farm Credit System Insurance Corporation Board, 53966

**Federal Aviation Administration**
**RULES**
Airworthiness Directives:
  Agusta S.p.A. (Agusta) Model A119 and AW119 MKII Helicopters, 53859–53861
  BAE SYSTEMS (OPERATIONS) LIMITED Model BAe 146 and Avro 146–RJ Airplanes, 53855–53857
  Bombardier, Inc. Model CL–600–2C10 (Regional Jet Series 700, 701 & 702), CL–600–2D15 (Regional Jet Series 705), and CL–600–2D24 (Regional Jet Series 900) Airplanes, 53851–53855
  Bombardier, Inc. Model CL–600–2C10 (Regional Jet Series 700, 701, & 702); et al., 53849–53851
  Eurocopter France Model SA330J Helicopters, 53857–53859
  GA 8 Airvan (Pty) Ltd Models GA8 and GA8 TC320 Airplanes, 53846–53849
  Robert E. Rust, Jr. Model DeHavilland DH.C1 Chipmunk 21, DH.C1 Chipmunk 22, and DH.C1 Chipmunk 22A Airplanes, 53861–53863
  The Boeing Company Model 737–100 and –200 Series Airplanes, 53843–53846
  Thielert Aircraft Engines GmbH (TAE) Models TAE 125–01 and TAE 125–02–99 Reciprocating Engines, etc.; Correction, 53846

Amendment of Restricted Area R–5113; Socorro, NM, 53863–53864
PROPOSED RULES
Proposed Establishments of Class E Airspace:
Berryville, AR, 53876–53877
NOTICES
Meetings:
Commercial Space Transportation Advisiory Committee, 54002
RTCA Special Committee 186; Automatic Dependent Surveillance—Broadcast, 54001–54002

**Federal Emergency Management Agency**
NOTICES
Major Disaster Declarations:
Kentucky, Amendment No. 5, 53978
Kentucky, Amendment No. 8, 53977–53978
Missouri, Amendment No. 1, 53977

**Federal Energy Regulatory Commission**
NOTICES
Applications:
Chignik Lagoon Power Utility, 53960–53961
Iron Mask Hydro, LLC, 53963
Natural Currents Energy Services, LLC, 53962
Pajuela Peak Hydro, LLC, 53961
Puget Sound Energy, Inc., 53961–53962
Baseline Filings:
Peoples Gas Light and Coke Co.; Minnesota Energy Resources Corp. et al., 53963–53964
Environmental Impact Statements; Availability, etc.:
Swan Falls Project, Idaho Power Co., Idaho, 53964
Filings:
Centana Intrastate Pipeline, LLC, 53964
Washington Gas Light Co., 53964–53965
Initial Market-Based Rate Filings Including Requests for Blanket Section 204 Authorizations:
Domtar Maine, LLC, 53965
Enserco Energy Inc., 53965
Requests Under Blanket Authorization:
Kinder Morgan Interstate Gas Transmission, LLC, 53966

**Federal Reserve System**
NOTICES
Agency Information Collection Activities; Proposals, Submissions, and Approvals, 53966–53968
Changes in Bank Control:
Acquisitions of Shares of Banks or Bank Holding Companies, 53968

**Federal Trade Commission**
NOTICES
Analysis of Proposed Consent Order To Aid Public Comment:
Reverb Communications, Inc., 53968–53969

**Federal Transit Administration**
NOTICES
Agency Information Collection Activities; Proposals, Submissions, and Approvals, 53999–54000

**Fine Arts Commission**
*See* Commission of Fine Arts

**Fish and Wildlife Service**
NOTICES
Endangered and Threatened Wildlife and Plants:
5-Year Status Reviews for Lomatium cookii (Cooks Lomatium) and Limnanthes floccosa ssp. grandiflora (Large-flowered Woolly Meadowfoam), 53978–53979

**Food and Drug Administration**
NOTICES
Determinations of Regulatory Review Periods for Purposes of Patent Extensions:
ONGLYZA; Correction, 53969
PRISTIQ; Correction, 53969
Guidance for Industry and Food and Drug Administration Staff; Availability:
Impact-Resistant Lense; Questions and Answers, 53971–53972
Guidance for Industry; Availability, etc.:
Small Entities Compliance Guide—Designation of New Animal Drugs for Minor Uses or Minor Species, 53973
Small Entities Compliance Guide—Index of Legally Marketed Unapproved New Animal Drugs for Minor Species, 53972–53973
International Conference on Harmonisation:
Guidance on Q4B Evaluation and Recommendation of Pharmacopoeial Texts, etc.; Availability, 53973–53974
Meetings:
Office of Womens Health Update, 53975
Public Workshops:
Risks and Benefits of Long-Term Use of Nicotine Replacement Therapy Products, 53976–53977

**Forest Service**
NOTICES
Meetings:
Prince of Wales Resource Advisory Committee, 53947

**Health and Human Services Department**
*See* Children and Families Administration
*See* Food and Drug Administration
*See* National Institutes of Health
*See* Substance Abuse and Mental Health Services Administration

**Homeland Security Department**
*See* Coast Guard
*See* Federal Emergency Management Agency

**Industry and Security Bureau**
RULES
Updated Statements of Legal Authority for the Export Administration Regulations, 53864–53867

**Interior Department**
*See* Fish and Wildlife Service
*See* Land Management Bureau
*See* National Park Service

**International Trade Administration**
NOTICES
Amended Final Determination of Sales at Less Than Fair Value Pursuant to Court Decision:
Certain Frozen Warmwater Shrimp From Brazil, India, the People's Republic of China, Thailand and Vietnam, 53947–53950

Preliminary Results of Antidumping Duty Administrative Review:
Polyethylene Retail Carrier Bags From Thailand, 53953–53957

**International Trade Commission**
NOTICES
Complaints, 53981–53982

**Justice Department**
*See* Drug Enforcement Administration

**Labor Department**
*See* Employment and Training Administration

**Land Management Bureau**
NOTICES
Field Tours:
Pinedale Anticline Working Group, 53980
Meetings:
Pinedale Anticline Working Group; Rescheduled, 53980–53981
Proposed Reinstatement of Terminated Oil and Gas Leases:
CACA 47609, California, 53981
Wyoming, 53981

**National Credit Union Administration**
RULES
Permanent Increase in Standard Maximum Share Insurance Amount; Display of Official Sign, 53841–53843

**National Highway Traffic Safety Administration**
NOTICES
Agency Information Collection Activities; Proposals, Submissions, and Approvals, 54000–54001
Petition for Decision That Nonconforming Buses Are Eligible for Importation:
1987–1988 Leyland Motors Olympian Open Top Model Double Decker Buses, 54002–54003

**National Institutes of Health**
NOTICES
Meetings:
National Center on Minority Health and Health Disparities, 53975

**National Oceanic and Atmospheric Administration**
RULES
Atlantic Highly Migratory Species:
Inseason Action To Close the Commercial Porbeagle Shark Fishery, 53871
Fisheries of the Exclusive Economic Zone Off Alaska:
Northern Rockfish for Vessels Participating in the Rockfish Entry Level Fishery in the Central Regulatory Area; Closure, 53875
Pacific Ocean Perch for Vessels Participating in Rockfish Entry Level Fishery in Central Regulatory Area of Gulf of Alaska, 53873–53874
Pelagic Shelf Rockfish for Vessels Participating in the Rockfish Entry Level Fishery, etc.; Closure, 53874–53875
Fisheries of the Northeastern United States:
Northeast Multispecies Fishery; Modification of the Common Pool Day-at-Sea Accounting and Possession Prohibition for Witch Flounder, 53871–53873
PROPOSED RULES
Fisheries of Northeastern United States:
Northeast Multispecies Fishery; Addenda to 17 Fishing Year (FY) 2010 Sector Operations Plans and Contracts, 53939–53946
Sea Turtle Conservation:
Shrimp and Summer Flounder Trawling Requirements, 53925–53938
NOTICES
Fisheries of the Gulf of Mexico:
Southeast Data, Assessment, and Review Update; Greater Amberjack, 53951
Meetings:
Gulf of Mexico Fishery Management Council, 53952
Mid-Atlantic Fishery Management Council, 53952
North Pacific Fishery Management Council, 53951–53952
National Saltwater Angler Registry Program:
Designation of Exempted States for Anglers, Spear Fishers, and For-Hire Fishing Vessels, 53953

**National Park Service**
NOTICES
Environmental Impact Statements; Availability, etc.:
Bison Brucellosis Remote Vaccination, Yellowstone National Park, WY, 53979
Elk Management Plan, Theodore Roosevelt National Park, Billings and McKenzie Counties, ND, 53980

**Navy Department**
NOTICES
Meetings:
Board of Advisors to the Presidents of the Naval Postgraduate School and the Naval War College, 53958–53959
Board of Visitors of Marine Corps University, 53958
Chief of Naval Operations Executive Panel, 53959

**Nuclear Regulatory Commission**
NOTICES
Environmental Assessments and Finding of No Significant Impact:
Virginia Electric and Power Co., Surry Power Station and North Anna Power Station, 53984
Establishment of Atomic Safety and Licensing Board:
Southern Nuclear Operating Company, 53985
Temporary Exemptions:
Arizona Public Service Company, et al.; Palo Verde Nuclear Generating Station, Unit 3, 53985–53987

**Securities and Exchange Commission**
NOTICES
Agency Information Collection Activities; Proposals, Submissions, and Approvals, 53987–53988
Requirement to Use eXtensible Business Reporting Language Format, etc., 53988–53989
Self-Regulatory Organizations; Proposed Rule Changes:
Financial Industry Regulatory Authority, Inc., 53998–53999
International Securities Exchange, LLC, 53991–53992
NASDAQ OMX BX, Inc., 53992–53994
NASDAQ Stock Market LLC, 53989–53991, 53994–53997

**Substance Abuse and Mental Health Services Administration**

NOTICES
Meetings:
Advisory Committee for Womens Services, 53975

**Thrift Supervision Office**
**NOTICES**
Appointment of Receiver:
Imperial Savings and Loan Association, Martinsville, VA, 54003–54004

**Transportation Department**
*See* Federal Aviation Administration
*See* Federal Transit Administration
*See* National Highway Traffic Safety Administration
**NOTICES**
Applications:
Certificates of Public Convenience and Necessity and Foreign Air Carrier Permits Filed Under Subpart B, 53999

**Treasury Department**
*See* Alcohol and Tobacco Tax and Trade Bureau
*See* Thrift Supervision Office

**Reader Aids**

Consult the Reader Aids section at the end of this page for phone numbers, online resources, finding aids, reminders, and notice of recently enacted public laws.

To subscribe to the Federal Register Table of Contents LISTSERV electronic mailing list, go to http://listserv.access.gpo.gov and select Online mailing list archives, FEDREGTOC-L, Join or leave the list (or change settings); then follow the instructions.

## CFR PARTS AFFECTED IN THIS ISSUE

A cumulative list of the parts affected this month can be found in the Reader Aids section at the end of this issue.


**12 CFR**
740 ..... 53841
745 ..... 53841

**14 CFR**
39 (9 documents) ..... 53843, 53846, 53849, 53851, 53855, 53857, 53859, 53861
73 ..... 53863

**Proposed Rules:**
71 ..... 53876

**15 CFR**
730 ..... 53864
732 ..... 53864
734 ..... 53864
736 ..... 53864
738 ..... 53864
740 ..... 53864
742 ..... 53864
743 ..... 53864
744 ..... 53864
746 ..... 53864
747 ..... 53864
748 ..... 53864
750 ..... 53864
752 ..... 53864
754 ..... 53864
756 ..... 53864
758 ..... 53864
760 ..... 53864
762 ..... 53864
764 ..... 53864
766 ..... 53864
768 ..... 53864
770 ..... 53864
772 ..... 53864
774 ..... 53864

**21 CFR**
1310 ..... 53867

**27 CFR**

**Proposed Rules:**
9 ..... 53877

**33 CFR**
165 ..... 53870

**40 CFR**

**Proposed Rules:**
52 (3 documents) ..... 53883, 53892, 53907
60 ..... 53908
140 ..... 53914

**50 CFR**
635 ..... 53871
648 ..... 53871
679 (3 documents) ..... 53873, 53874, 53875

**Proposed Rules:**
223 ..... 53925
648 ..... 53939

# Rules and Regulations

Federal Register

Vol. 75, No. 170

Thursday, September 2, 2010

This section of the FEDERAL REGISTER contains regulatory documents having general applicability and legal effect, most of which are keyed to and codified in the Code of Federal Regulations, which is published under 50 titles pursuant to 44 U.S.C. 1510.

The Code of Federal Regulations is sold by the Superintendent of Documents. Prices of new books are listed in the first FEDERAL REGISTER issue of each week.

## NATIONAL CREDIT UNION ADMINISTRATION

### 12 CFR Parts 740 and 745

**RIN 3133–AD78**

### Display of Official Sign; Permanent Increase in Standard Maximum Share Insurance Amount

**AGENCY:** National Credit Union Administration (NCUA).

**ACTION:** Final rule.

**SUMMARY:** President Obama signed into law the Dodd-Frank Wall Street Reform and Consumer Protection Act (Dodd-Frank Act) on July 21, 2010. Section 335 of the Dodd-Frank Act amended the Federal Credit Union Act (FCU Act) to make permanent the standard maximum share insurance amount (SMSIA) of $250,000. NCUA is amending its share insurance and official sign regulations to conform to this statutory change.

**DATES:** The rule is effective September 2, 2010. The mandatory compliance date regarding the revisions to NCUA's official sign rule, 12 CFR Part 740, is March 2, 2011.

**FOR FURTHER INFORMATION CONTACT:** Frank Kressman, Senior Staff Attorney, Office of General Counsel, 1775 Duke Street, Alexandria, Virginia 22314 or telephone (703) 518–6540.

**SUPPLEMENTARY INFORMATION:** NCUA is amending its Part 745 share insurance regulations and Part 740 official sign regulations to reflect Congress' action making permanent the increase in the SMSIA from $100,000 to $250,000.

## A. Background

The Emergency Economic Stabilization Act of 2008 temporarily increased the SMSIA from $100,000 to $250,000 through December 31, 2009. Public Law 110–343 (Oct. 3, 2008). On October 15, 2008, NCUA issued an interim final rule amending its share insurance regulations to reflect that temporary increase. 73 FR 62856 (October 22, 2008). On May 20, 2009, the President signed the Helping Families Save Their Homes Act of 2009 ("Helping Families Act") which, among other things, extended the temporary increase in the SMSIA from December 31, 2009 to December 31, 2013. Public Law 111–22 (May 20, 2009). On October 22, 2009, NCUA issued a final rule which, among other things, amended its share insurance regulations to reflect this extension. 74 FR 55747 (October 29, 2009). On July 21, 2010, the President signed the Dodd-Frank Act which, among other things, made permanent the increase in the SMSIA from $100,000 to $250,000. Public Law 111–203 (July 21, 2010).[1]

Part 740 of NCUA's regulations requires that each insured credit union continuously display an official NCUA sign. The official sign informs members of the minimum amount of share insurance coverage to which they are entitled and states that the insurance is backed by the full faith and credit of the United States Government. Because the SMSIA of $250,000 has been temporary until the recent enactment of the Dodd-Frank Act, NCUA's current official sign regulation has provided insured credit unions with maximum flexibility in displaying the sign. 12 CFR 740.4. Specifically, § 740.4 currently permits insured credit unions the options to: (1) Continue to display the version of the official sign reflecting the $100,000 limit; (2) display any other version of the official sign distributed or approved by NCUA and appearing on NCUA's official Web site that reflects the increase to $250,000; or (3) alter by hand or otherwise the $100,000 sign to make it reflect the increase to $250,000 provided the altered sign is legible and otherwise complies with Part 740.

[1] The effective date of the Dodd-Frank Act is July 22, 2010, one day after its enactment. Although the SMSIA has been permanently increased, it is still subject to an inflation adjustment pursuant to subparagraph (F) of section 11(a)(1) of the Federal Deposit Insurance Act. 12 U.S.C. 1821(a)(1)(F). However, this inflation adjustment will not affect the level of the SMSIA in the foreseeable future because it will not take effect until the value of $100,000, inflation adjusted since 2005, exceeds the current SMSIA.

## B. The Final Rule

*1. Section 745.1—Share Insurance Definitions*

The final rule amends NCUA's share insurance regulation by defining the SMSIA as $250,000 on a permanent basis as mandated by the Dodd-Frank Act.

*2. Section 740.4—NCUA's Official Sign*

The final rule amends NCUA's official sign rule to reflect the permanent increase in the SMSIA. The official sign will continue to have the same size and design. The only revision is replacing "$100,000" with "$250,000" on the sign. This amendment also is in response to the Dodd-Frank Act.

To ensure credit union members are made aware of the permanent $250,000 limit, insured credit unions should obtain and display the new official sign as promptly as possible, but in no event later than the mandatory compliance date discussed below. After the mandatory compliance date, insured credit unions may only display the revised official sign reflecting the $250,000 limit. Insured credit unions may not continue to display signs reflecting the $100,000 limit nor may they continue to display signs that originally reflected the $100,000 limit that have been altered by hand or otherwise to reflect the $250,000 limit. NCUA is aware, from previous experience, that putting a revised official sign in place can be a disruptive process for credit unions. NCUA recognizes the need to balance easing that burden with the importance of informing members of the increased insurance coverage.

Accordingly, an insured credit union will be required to replace the old version of the official sign with the revised official sign at required locations such as each station or window where the credit union normally receives insured funds or deposits in its principal place of business and all of its branches and on its internet page where it accepts deposits or opens accounts by March 2, 2011, which is six months from the effective date of this rule. Additionally, a credit union must replace the old version of the official sign with the revised official sign on each document where the credit union has chosen to include the official sign, including advertisements, marketing and

promotional materials, disclosures, and others by that same date. NCUA believes six months is sufficient time for an insured credit union to replace physical and internet signs and deplete its stockpiles of other printed advertising materials. NCUA also believes that many credit unions are already using official signs and printed advertising materials reflecting the $250,000 limit as permitted by § 740.4.

NCUA will provide insured credit unions with an initial supply of the revised official sign with a blue background and white lettering at no cost and has already made a downloadable graphic of the revised official sign available on the agency Web site for credit unions to use on their own Web sites. An insured credit union may continue to purchase signs from a commercial supplier or develop its own and use any color scheme it chooses so long as the sign is legible and otherwise complies with Part 740. 12 CFR 740.4(b)(2).

**C. Administrative Procedure Act**

NCUA believes that good cause exists for issuing the final rule without an opportunity for public comment, pursuant to section 553(b)(3)(B) of the Administrative Procedure Act (APA), because seeking public comment under these circumstances is "unnecessary," "impracticable," and "contrary to the public interest." 5 U.S.C. 553(b)(3)(B). NCUA also finds good cause for issuing the final rule without a 30-day delayed effective date, pursuant to section 553(d)(3) of the APA.

The Dodd-Frank Act amends section 207(k)(5) of the FCU Act, 12 U.S.C. 1787(k)(5), to permanently increase the SMSIA to $250,000. The final rule makes conforming amendments to NCUA's regulations to reflect this statutory change. None of the other regulations affecting the calculation of share insurance are affected by the final rule.

The final rule only amends NCUA's definition of SMSIA to conform to the language of the amended FCU Act and conforms the official NCUA sign to be consistent with those provisions. In this circumstance, NCUA has no rulemaking discretion that could be informed by the APA's notice and comment process. Accordingly, NCUA finds that notice and comment procedures are "unnecessary" and that the "good cause" exception to the APA's notice and comment requirement applies. *See, e.g., Gray Panthers Advocacy Comm.* v. *Sullivan, 936 F.2d 1284, 1290–92 (DC Cir. 1991)* (regulations that "either restate or paraphrase the detailed requirements" of a self-executing statute do not require notice and comment); *Nat'l Customs Brokers & Forwarders Ass'n* v. *United States, 59 F.3d 1219, 1223–24 (Fed. Cir. 1995)* (notice and comment unnecessary where Congress directed agency to change regulations and public would benefit from amendments).

Additionally, a finding of good cause is warranted because it would be "impracticable" and "contrary to the public interest" to delay the effective date of this rule in order to seek public comment on the revision. Because the revision to the SMSIA was effective one day after enactment of the Dodd-Frank Act, it is in the public interest for NCUA to take immediate action to make credit union members aware of the permanent increase in share insurance coverage. A delay in taking action would be detrimental to this goal, and therefore, complying with formal notice and comment procedures is "impracticable" and "contrary to the public interest."

Finally, a finding of good cause for waiving the requirement of a 30-day delayed effective date is warranted because of the need to provide immediate guidance to credit union members. Timely displaying of the new official sign will provide this. Also, delaying the effective date is unnecessary because the only provision of the final rule requiring credit unions to take action will not be enforced for six months after the rule's effective date, which is when credit unions must comply with the rule.

**D. Regulatory Procedures**

*Regulatory Flexibility Act*

The Regulatory Flexibility Act requires NCUA to prepare an analysis to describe any significant economic impact a rule may have on a substantial number of small entities (primarily those under ten million dollars in assets). This rule will not have a significant economic impact on a substantial number of small credit unions, and therefore, no regulatory flexibility analysis is required.

*Small Business Regulatory Enforcement Fairness Act*

The Small Business Regulatory Enforcement Fairness Act (SBREFA) of 1996, Public Law 104–121, provides generally for congressional review of agency rules. A reporting requirement is triggered in instances where NCUA issues a final rule as defined by Section 551 of the APA. 5 U.S.C. 551. The Office of Information and Regulatory Affairs, an office within the Office of Management and Budget, is currently reviewing this rule, and NCUA anticipates it will determine that, for purposes of SBREFA, this is not a major rule.

*Paperwork Reduction Act*

The final rule will revise NCUA's share insurance and official sign regulations. It will not involve any new collections of information pursuant to the Paperwork Reduction Act. 44 U.S.C. 3501 *et seq.* NCUA has determined that the amendments will not increase paperwork requirements and a paperwork reduction analysis is not required.

*Executive Order 13132*

Executive Order 13132 encourages independent regulatory agencies to consider the impact of their actions on state and local interests. In adherence to fundamental federalism principles, NCUA, an independent regulatory agency as defined in 44 U.S.C. 3502(5), voluntarily complies with the executive order. This final rule will not have a substantial direct effect on the states, on the relationship between the national government and the states, or on the distribution of power and responsibilities among the various levels of government. NCUA has determined that this final rule does not constitute a policy that has federalism implications for purposes of the executive order.

*The Treasury and General Government Appropriations Act, 1999—Assessment of Federal Regulations and Policies on Families*

NCUA has determined that this final rule will not affect family well-being within the meaning of section 654 of the Treasury and General Government Appropriations Act, 1999, Public Law 105–277, 112 Stat. 2681 (1998).

**List of Subjects**

*12 CFR Part 740*

Advertisements, Credit unions, Signs and symbols.

*12 CFR Part 745*

Credit unions, Share insurance.

By the National Credit Union Administration Board, this 25th day of August 2010.

**Linda K. Dent,**

*Acting Secretary of the Board.*

■ For the reasons discussed above, NCUA amends 12 CFR Parts 740 and 745 as follows:

## PART 740—ACCURACY OF ADVERTISING AND NOTICE OF INSURED STATUS

■ 1. The authority citation for Part 740 continues to read as follows:

**Authority:** 12 U.S.C. 1766, 1781, 1789.

■ 2. Section 740.4 is amended by revising the image in paragraph (b) introductory text and by removing the last sentence of paragraph (b)(1).

**§ 740.4 Requirements for the official sign.**

* * * * *

(b) * * *

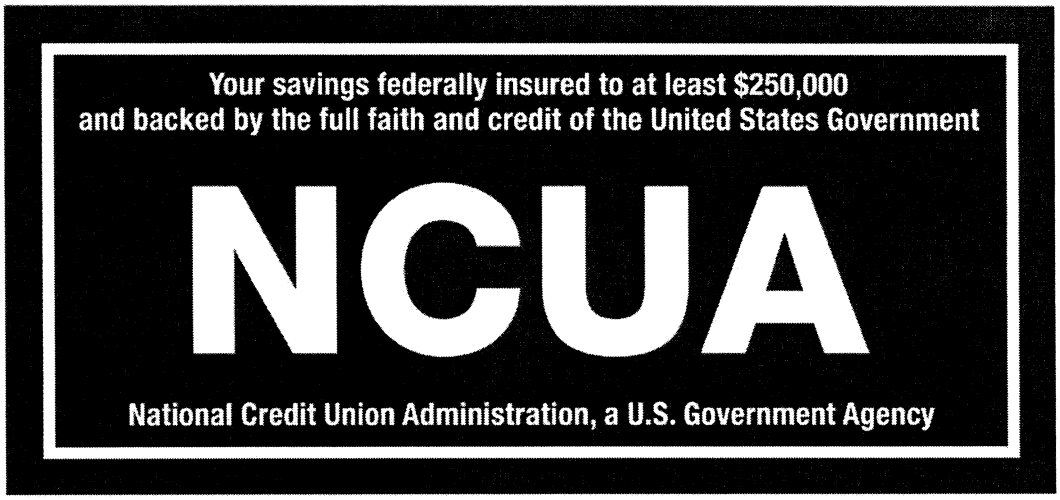


* * * * *

## PART 745—SHARE INSURANCE AND APPENDIX

■ 3. The authority citation for Part 745 continues to read as follows:

**Authority:** 12 U.S.C. 1752(5), 1757, 1765, 1766, 1781, 1782, 1787, 1789.

■ 4. Section 745.1(e) is revised to read as follows:

**§ 745.1 Definitions.**

* * * * *

(e) The term "standard maximum share insurance amount," referred to as the "SMSIA" hereafter, means $250,000 adjusted pursuant to subparagraph (F) of section 11(a)(1) of the Federal Deposit Insurance Act (12 U.S.C. 1821(a)(1)(F)).

[FR Doc. 2010–21864 Filed 9–1–10; 8:45 am]

BILLING CODE 7535–01–P

## DEPARTMENT OF TRANSPORTATION

### Federal Aviation Administration

### 14 CFR Part 39

**[Docket No. FAA–2010–0481; Directorate Identifier 2009–NM–192–AD; Amendment 39–16406; AD 2010–17–14]**

**RIN 2120–AA64**

## Airworthiness Directives; The Boeing Company Model 737–100 and –200 Series Airplanes

**AGENCY:** Federal Aviation Administration (FAA), DOT.

**ACTION:** Final rule.

**SUMMARY:** We are adopting a new airworthiness directive (AD) for certain Model 737–100 and –200 series airplanes. This AD requires repetitive inspections for cracking and damaged fasteners of certain fuselage frames and stub beams, and corrective actions if necessary. For certain airplanes, this AD also requires repetitive inspections for cracking of the inboard chord fastener hole of the frame at body station 639, stringer S–16, and corrective actions if necessary. For certain airplanes, this AD also requires an inspection to determine the edge margin of the lower chord. For airplanes with a certain short edge margin, this AD requires repetitive inspections for cracking, and corrective actions if necessary; replacing the lower chord terminates the repetitive inspections. This AD requires an eventual preventive modification. For certain airplanes, doing the modification or a repair terminates the repetitive inspections for the repaired or modified frame only. For airplanes on which the modification or repair is done at certain body stations, this AD requires repetitive inspections for cracking of certain frame webs and inner and outer chords, and corrective actions if necessary. For certain other airplanes, this AD requires a modification which includes reinforcing the body frame inner chords, replacing the stub beam upper chords and attach angles, and reinforcing the stub beam web. This AD results from reports of fatigue cracks at certain frame sections, in addition to stub beam cracking, caused by high flight cycle stresses from both pressurization and maneuver load. We are issuing this AD to detect and correct fatigue cracking of certain fuselage frames and stub beams, and possible severed frames, which could result in reduced structural integrity of the frames. This reduced structural integrity can increase loading in the fuselage skin, which will accelerate skin crack growth and result in rapid decompression of the fuselage.

**DATES:** This AD is effective October 7, 2010.

The Director of the Federal Register approved the incorporation by reference of a certain publication listed in the AD as of October 7, 2010.

**ADDRESSES:** For service information identified in this AD, contact Boeing Commercial Airplanes, Attention: Data & Services Management, P.O. Box 3707, MC 2H–65, Seattle, Washington 98124–2207; telephone 206–544–5000, extension 1, fax 206–766–5680; e-mail *me.boecom@boeing.com;* Internet *https://www.myboeingfleet.com.*

### Examining the AD Docket

You may examine the AD docket on the Internet at *http://www.regulations.gov;* or in person at the Docket Management Facility between 9 a.m. and 5 p.m., Monday through Friday, except Federal holidays. The AD docket contains this AD, the regulatory evaluation, any comments received, and other information. The address for the Docket Office (telephone 800–647–5527)

is the Document Management Facility, U.S. Department of Transportation, Docket Operations, M–30, West Building Ground Floor, Room W12–140, 1200 New Jersey Avenue, SE., Washington, DC 20590.

**FOR FURTHER INFORMATION CONTACT:** Wayne Lockett, Aerospace Engineer, Airframe Branch, ANM–120S, FAA, Seattle Aircraft Certification Office, 1601 Lind Avenue, SW., Renton, Washington 98057–3356; telephone (425) 917–6447; fax (425) 917–6590.

**SUPPLEMENTARY INFORMATION:**

## Discussion

We issued a notice of proposed rulemaking (NPRM) to amend 14 CFR part 39 to include an airworthiness directive (AD) that would apply to certain Model 737–100 and –200 series airplanes. That NPRM was published in the **Federal Register** on May 19, 2010 (75 FR 27969). That NPRM proposed to require repetitive inspections for cracking and damaged fasteners of certain fuselage frames and stub beams, and corrective actions if necessary. For certain airplanes, that NPRM also proposed to require repetitive inspections for cracking of the inboard chord fastener hole of the frame at body station 639, stringer S–16, and corrective actions if necessary. For certain airplanes, that NPRM also proposed to require an inspection to determine the edge margin of the lower chord. For airplanes with a certain short edge margin, that NPRM proposed to require repetitive inspections for cracking, and corrective actions if necessary; replacing the lower chord would terminate the repetitive inspections. That NPRM proposed to require an eventual preventive modification. For certain airplanes, doing the modification or a repair would terminate the repetitive inspections for the repaired or modified frame only. For airplanes on which the modification or repair is done at certain body stations, that NPRM proposed to require repetitive inspections for cracking of certain frame webs and inner and outer chords, and corrective actions if necessary. For certain other airplanes, that NPRM proposed to require a modification which includes reinforcing the body frame inner chords, replacing the stub beam upper chords and attach angles, and reinforcing the stub beam web.

## Comments

We gave the public the opportunity to participate in developing this AD. We considered the comment received. Boeing supports the NPRM.

## Conclusion

We reviewed the relevant data, considered the comment received, and determined that air safety and the public interest require adopting the AD as proposed.

## Costs of Compliance

We estimate that this AD affects 45 airplanes of U.S. registry.

We estimate that it will take about 4 work-hours per product to comply with the required inspections. The average labor rate is $85 per work-hour. Based on these figures, we estimate the cost of this inspection to the U.S. operators to be $15,300, or $340 per product, per inspection cycle.

We estimate that it will take about 288 work-hours per product to comply with the required modification (for Group 1–3 airplanes). The average labor rate is $85 per work-hour. Required parts cost about $58,742 per product. Based on these figures, we estimate the cost of this modification to the U.S. operators to be $83,222 per product.

## Authority for This Rulemaking

Title 49 of the United States Code specifies the FAA's authority to issue rules on aviation safety. Subtitle I, section 106, describes the authority of the FAA Administrator. "Subtitle VII: Aviation Programs," describes in more detail the scope of the Agency's authority.

We are issuing this rulemaking under the authority described in "Subtitle VII, Part A, Subpart III, Section 44701: General requirements." Under that section, Congress charges the FAA with promoting safe flight of civil aircraft in air commerce by prescribing regulations for practices, methods, and procedures the Administrator finds necessary for safety in air commerce. This regulation is within the scope of that authority because it addresses an unsafe condition that is likely to exist or develop on products identified in this rulemaking action.

## Regulatory Findings

This AD will not have federalism implications under Executive Order 13132. This AD will not have a substantial direct effect on the States, on the relationship between the national government and the States, or on the distribution of power and responsibilities among the various levels of government.

For the reasons discussed above, I certify that this AD:

(1) Is not a "significant regulatory action" under Executive Order 12866,

(2) Is not a "significant rule" under DOT Regulatory Policies and Procedures (44 FR 11034, February 26, 1979), and

(3) Will not have a significant economic impact, positive or negative, on a substantial number of small entities under the criteria of the Regulatory Flexibility Act.

You can find our regulatory evaluation and the estimated costs of compliance in the AD Docket.

## List of Subjects in 14 CFR Part 39

Air transportation, Aircraft, Aviation safety, Incorporation by reference, Safety.

## Adoption of the Amendment

■ Accordingly, under the authority delegated to me by the Administrator, the FAA amends 14 CFR part 39 as follows:

## PART 39—AIRWORTHINESS DIRECTIVES

■ 1. The authority citation for part 39 continues to read as follows:

**Authority:** 49 U.S.C. 106(g), 40113, 44701.

### § 39.13 [Amended]

■ 2. The FAA amends § 39.13 by adding the following new AD:

**2010–17–14 The Boeing Company:** Amendment 39–16406. Docket No. FAA–2010–0481; Directorate Identifier 2009–NM–192–AD.

**Effective Date**

(a) This airworthiness directive (AD) is effective October 7, 2010.

**Affected ADs**

(b) None.

**Applicability**

(c) This AD applies to The Boeing Company Model 737–100 and –200 series airplanes, certificated in any category; line numbers 1 through 848 inclusive.

**Subject**

(d) Air Transport Association (ATA) of America Code 53: Fuselage.

**Unsafe Condition**

(e) This AD results from reports of fatigue cracks at certain frame sections, in addition to stub beam cracking, caused by high flight cycle stresses from both pressurization and maneuver load. The Federal Aviation Administration is issuing this AD to detect and correct fatigue cracking of certain fuselage frames and stub beams, and possible severed frames, which could result in reduced structural integrity of the frames. This reduced structural integrity can increase loading in the fuselage skin, which will accelerate skin crack growth and result in rapid decompression of the fuselage.

**Compliance**

(f) You are responsible for having the actions required by this AD performed within the compliance times specified, unless the actions have already been done.

**Inspections**

(g) For airplanes on which a repair (Part III of the Accomplishment Instructions of Boeing Service Bulletin 737–53–1061) or preventive modification (Part II of the Accomplishment Instructions of Boeing Service Bulletin 737–53–1061) has not been done in accordance with Boeing Service Bulletin 737–53–1061 as of the effective date of this AD: Before the accumulation of 15,000 total flight cycles or within 3,000 flight cycles after the effective date of this AD, whichever occurs later, do the inspections required by paragraphs (g)(1) and (g)(2) of this AD, in accordance with the Accomplishment Instructions of Boeing Service Bulletin 737–53–1061, Revision 4, dated July 16, 1992. Repeat the inspection at the time specified, until the terminating action required by paragraph (l) of this AD is done.

(1) Do a detailed inspection (Part I of the Accomplishment Instructions of Boeing Service Bulletin 737–53–1061, Revision 4, dated July 16, 1992) for cracks and damaged fasteners of the fuselage frames and stub beams. If no crack or damaged fastener is found, repeat the inspection thereafter at intervals not to exceed 4,500 flight cycles.

(2) Do an eddy current inspection (Part IV of the Accomplishment Instructions of Boeing Service Bulletin 737–53–1061, Revision 4, dated July 16, 1992) for cracking of the inboard chord fastener hole of the frame at body station 639, stringer S–16. If no crack is found, repeat the inspection thereafter at intervals not to exceed 15,000 flight cycles.

**Note 1:** Access and restoration instructions, as detailed in the Accomplishment Instructions of Boeing Service Bulletin 737–53–1061, Revision 4, dated July 16, 1992, are not required by this AD. Operators may do those actions in accordance with their maintenance practices.

(h) For airplanes on which the body station 597 frame was changed as of the effective date of this AD, in accordance with the Accomplishment Instructions of Boeing Service Bulletin 737–53–1061, dated May 28, 1982; Revision 1, dated December 16, 1983; Revision 2, dated April 18, 1986; or Revision 3, dated June 15, 1989: Within 3,000 flight cycles after the effective date of this AD, do a detailed inspection for cracking of the frame, in accordance with the Accomplishment Instructions of Boeing Service Bulletin 737–53–1061, Revision 4, dated July 16, 1992. Repeat the detailed inspection thereafter at intervals not to exceed 4,500 flight cycles. Installation of new radius fillers in accordance with the Accomplishment Instructions of Boeing Service Bulletin 737–53–1061, Revision 4, dated July 16, 1992, terminates the inspections required by this paragraph.

(i) For airplanes on which a stub beam lower chord with ¼-inch diameter fasteners at body station 597 is installed as of the effective date of this AD, in accordance with the Accomplishment Instructions of Boeing Service Bulletin 737–53–1061, Revision 1, dated December 16, 1983; Revision 2, dated April 18, 1986; or Revision 3, dated June 15, 1989: Within 3,000 flight cycles after the effective date of this AD, do a detailed inspection for short edge margins. If the short edge margin is determined to be less than 1.5D (diameter), before further flight, do a detailed inspection for cracking of the stub beam lower chords, in accordance with Boeing Service Bulletin 737–53–1061, Revision 4, dated July 16, 1992. Repeat the detailed inspection thereafter at intervals not to exceed 4,500 flight cycles, if the edge margin is less than 1.5D. If the edge margin is greater than or equal to 1.5D, no further action is required by this paragraph. Replacing the lower chord in accordance with Boeing Service Bulletin 737–53–1061, Revision 4, dated July 16, 1992, terminates the repetitive inspections specified in this paragraph.

**Corrective Actions**

(j) Except as required by paragraph (k) of this AD, if any crack or damaged fastener is found during any inspection required by this AD, before further flight, repair if cracking and damaged fasteners are within the specified limits, or do a preventive modification if cracking or damaged fasteners are outside the specified limits, in accordance with the Accomplishment Instructions of Boeing Service Bulletin 737–53–1061, Revision 4, dated July 16, 1992.

**Exception to Service Information**

(k) *Where Boeing Service Bulletin 737–53–1061, Revision 4, dated July 16, 1992, specifies to contact Boeing for repair instructions:* Before further flight, repair using a method approved in accordance with the procedures specified in paragraph (n) of this AD.

**Terminating Action (Preventive Modification) for Certain Inspections**

(l) *Before the accumulation of 75,000 total flight cycles:* Do the preventive modification in accordance with Part II, or repair in accordance with Part III, of the Accomplishment Instructions of Boeing Service Bulletin 737–53–1061, Revision 4, dated July 16, 1992. The modification or repair terminates the repetitive inspection requirements of this AD for the repaired or modified frame only, except as required by paragraph (m) of this AD.

**Post-Modification or Repair Inspections**

(m) *For airplanes on which a repair or modification at body station 616 or 639 is done:* Within 24,000 flight cycles after doing the repair or modification, or within 3,000 flight cycles after the effective date of this AD, whichever occurs later, do a detailed inspection for cracking of the body station 616 and 639 frame webs, inner chord, and outer chord near stringer S–16, in accordance with Boeing Service Bulletin 737–53–1061, Revision 4, dated July 16, 1992.

(1) If no cracking is found, repeat the inspection thereafter at intervals not to exceed 4,500 flight cycles.

(2) If any cracking is found, before further flight, repair the cracking using a method approved in accordance with the procedures specified in paragraph (n) of this AD.

**Alternative Methods of Compliance (AMOCs)**

(n)(1) The Manager, Seattle Aircraft Certification Office (ACO), FAA, has the authority to approve AMOCs for this AD, if requested using the procedures found in 14 CFR 39.19. Send information to ATTN: Wayne Lockett, Aerospace Engineer, Airframe Branch, ANM–120S, FAA, Seattle Aircraft Certification Office, 1601 Lind Avenue, SW., Renton, Washington 98057–3356; telephone (425) 917–6447; fax (425) 917–6590. Or, e-mail information to *9-ANM-Seattle-ACO-AMOC-Requests@faa.gov.*

(2) To request a different method of compliance or a different compliance time for this AD, follow the procedures in 14 CFR 39.19. Before using any approved AMOC on any airplane to which the AMOC applies, notify your principal maintenance inspector (PMI) or principal avionics inspector (PAI), as appropriate, or lacking a principal inspector, your local Flight Standards District Office. The AMOC approval letter must specifically reference this AD.

(3) An AMOC that provides an acceptable level of safety may be used for any repair required by this AD, if it is approved by the Boeing Commercial Airplanes Organization Delegation Authorization (ODA) that has been authorized by the Manager, Seattle ACO, to make those findings. For a repair method to be approved, the repair must meet the certification basis of the airplane.

**Material Incorporated by Reference**

(o) You must use Boeing Service Bulletin 737–53–1061, Revision 4, including Addendum, dated July 16, 1992; as applicable; to do the actions required by this AD, unless the AD specifies otherwise.

(1) The Director of the Federal Register approved the incorporation by reference of this service information under 5 U.S.C. 552(a) and 1 CFR part 51.

(2) For service information identified in this AD, contact Boeing Commercial Airplanes, Attention: Data & Services Management, P.O. Box 3707, MC 2H–65, Seattle, Washington 98124–2207; telephone 206–544–5000, extension 1, fax 206–766–5680; e-mail *me.boecom@boeing.com;* Internet *https://www.myboeingfleet.com.*

(3) You may review copies of the service information at the FAA, Transport Airplane Directorate, 1601 Lind Avenue, SW., Renton, Washington. For information on the availability of this material at the FAA, call 425–227–1221.

(4) You may also review copies of the service information that is incorporated by reference at the National Archives and Records Administration (NARA). For information on the availability of this material at NARA, call 202–741–6030, or go to: *http://www.archives.gov/federal_register/code_of_federal_regulations/ibr_locations.html.*

Issued in Renton, Washington, on August 11, 2010.

**Jeffrey E. Duven,**

*Acting Manager, Transport Airplane Directorate, Aircraft Certification Service.*

[FR Doc. 2010–20491 Filed 9–1–10; 8:45 am]

**BILLING CODE 4910–13–P**

## DEPARTMENT OF TRANSPORTATION

## Federal Aviation Administration

## 14 CFR Part 39

**[Docket No. FAA–2009–0201; Directorate Identifier 2008–NE–47–AD; Amendment 39–16314; AD 2010–11–09]**

**RIN 2120–AA64**

## Airworthiness Directives; Thielert Aircraft Engines GmbH (TAE) Models TAE 125–01 and TAE 125–02–99 Reciprocating Engines Installed In, But Not Limited To, Diamond Aircraft Industries Model DA 42 Airplanes; Correction

**AGENCY:** Federal Aviation Administration (FAA), DOT.

**ACTION:** Final rule; correction.

**SUMMARY:** The FAA is correcting airworthiness directive (AD) 2010–11–09, which published in the **Federal Register**. That AD applies to TAE models TAE 125–01 and TAE 125–02–99 reciprocating engines, installed in, but not limited to, Diamond Aircraft Industries model DA 42 airplanes. The part number for engine model TAE 125–01 is missing a digit in paragraph (c) and in paragraph (e)(3). This document corrects those part numbers. In all other respects, the original document remains the same.

**DATES:** This correction is effective September 2, 2010. The compliance times of AD 2010–11–09 remain unchanged.

**FOR FURTHER INFORMATION CONTACT:** Tara Chaidez, Aerospace Engineer, Engine Certification Office, FAA, Engine and Propeller Directorate, 12 New England Executive Park, Burlington, MA 01803; *e-mail: tara.chaidez@faa.gov;* telephone (781) 238–7773; fax (781) 238–7199.

**SUPPLEMENTARY INFORMATION:** On June 8, 2010 (75 FR 32253), we published a final rule AD, FR Doc. 2010–12540, in the **Federal Register**. That AD applies to TAE models TAE 125–01 and TAE 125–02–99 reciprocating engines, installed in, but not limited to, Diamond Aircraft Industries model DA 42 airplanes. We need to make the following corrections:

### § 39.13 [Corrected]

On page 32254, in the second column, in paragraph (c), in the fifth line, "or 02–7200–1401R1" is corrected to read "or 02–7200–14017R1".

On page 32254, in the second column, in paragraph (e)(3), in the second line, "engine P/N 02–7200–1401R1" is corrected to read "engine P/N 02–7200–14017R1"

Issued in Burlington, Massachusetts, on August 26, 2010.

**Thomas A. Boudreau,**

*Acting Manager, Engine and Propeller Directorate, Aircraft Certification Service.*

[FR Doc. C1–2010–21870 Filed 9–1–10; 8:45 am]

**BILLING CODE 4910–13–P**

## DEPARTMENT OF TRANSPORTATION

## Federal Aviation Administration

## 14 CFR Part 39

**[Docket No. FAA–2010–0463; Directorate Identifier 2010–CE–021–AD; Amendment 39–16425; AD 2010–10–01 R1]**

**RIN 2120–AA64**

## Airworthiness Directives; GA 8 Airvan (Pty) Ltd Models GA8 and GA8–TC320 Airplanes

**AGENCY:** Federal Aviation Administration (FAA), Department of Transportation (DOT).

**ACTION:** Final rule.

**SUMMARY:** We are revising an existing airworthiness directive (AD) for the products listed above. This AD results from mandatory continuing airworthiness information (MCAI) issued by an aviation authority of another country to identify and correct an unsafe condition on an aviation product. The MCAI describes the unsafe condition as:

> Inspection of a high time aircraft has revealed cracks in the Horizontal Stabiliser rear spar splice plate and inboard main ribs around the area of the Horizontal Stabiliser rear pivot attachment. Additionally, failure of some attach bolts in service may be due to improper assembly.
>
> This amendment is issued to include an applicability matrix (Table 1, page 2) in the compliance section of the service bulletin for improved clarity.

We are issuing this AD to require actions to correct the unsafe condition on these products.

**DATES:** This AD becomes effective October 7, 2010.

On October 7, 2010, the Director of the Federal Register approved the incorporation by reference of Gippsland Aeronautics Mandatory Service Bulletin SB–GA8–2002–02, Issue 6, dated April 21, 2010, listed in this AD.

As of March 2, 2009 (74 FR 8159; February 24, 2009), the Director of the Federal Register approved the incorporation by reference of Gippsland Aeronautics Mandatory Service Bulletin SB–GA8–2002–02, Issue 5, dated November 13, 2008, listed in this AD.

**ADDRESSES:** You may examine the AD docket on the Internet at *http://www.regulations.gov* or in person at the Docket Management Facility, U.S. Department of Transportation, Docket Operations, M–30, West Building Ground Floor, Room W12–140, 1200 New Jersey Avenue, SE., Washington, DC 20590.

**FOR FURTHER INFORMATION CONTACT:** Doug Rudolph, Aerospace Engineer, FAA, Small Airplane Directorate, 901 Locust, Room 301, Kansas City, Missouri 64106; telephone: (816) 329–4059; fax: (816) 329–4090.

**SUPPLEMENTARY INFORMATION:**

### Discussion

We issued a notice of proposed rulemaking (NPRM) to amend 14 CFR part 39 to include an AD that would apply to the specified products. That NPRM was published in the **Federal Register** on June 21, 2010 (75 FR 34953), and proposed to revise AD 2010–10–01, Amendment 39–16280 (75 FR 23577, May 4, 2010).

Since we issued AD 2010–10–01, the foreign authority has issued an amendment to include an applicability matrix in the compliance section of the manufacturer's service bulletin for improved clarity. The FAA is revising this AD to allow the use of issue 6 or issue 5 of the service bulletin. An operator would be in compliance if the operator chose to only accomplish issue 5 of the service bulletin. This revision of the FAA's AD will make the FAA AD more in line with the latest version of the received MCAI.

The NPRM proposed to correct an unsafe condition for the specified products. The MCAI states that:

> Inspection of a high time aircraft has revealed cracks in the Horizontal Stabiliser rear spar splice plate and inboard main ribs around the area of the Horizontal Stabiliser rear pivot attachment. Additionally, failure of some attach bolts in service may be due to improper assembly.
>
> This amendment is issued to include an applicability matrix (Table 1, page 2) in the compliance section of the service bulletin for improved clarity.
>
> The previous amendment included reference to the GA8–TC 320 variant in the applicability section.
>
> Amendment 2 was issued because the requirement document now contains an inspection for cracking in horizontal stabilisers which have load transferring fittings installed.
>
> Previous amendments of this AD listed the AD requirements in full. Due to the extensive

use of diagrams and photographs, it is no longer appropriate or practical to write the requirements of the service bulletin out in full in this AD. All requirements, accomplishment instructions and illustrations are contained in the service bulletin.

### Comments

We gave the public the opportunity to participate in developing this AD. We received no comments on the NPRM or on the determination of the cost to the public.

### Conclusion

We reviewed the available data and determined that air safety and the public interest require adopting the AD as proposed.

### Differences Between This AD and the MCAI or Service Information

We have reviewed the MCAI and related service information and, in general, agree with their substance. But we might have found it necessary to use different words from those in the MCAI to ensure the AD is clear for U.S. operators and is enforceable. In making these changes, we do not intend to differ substantively from the information provided in the MCAI and related service information.

We might also have required different actions in this AD from those in the MCAI in order to follow FAA policies. Any such differences are highlighted in a note within the AD.

### Costs of Compliance

We estimate that this AD will affect 25 products of U.S. registry. We also estimate that it will take about 1 work-hour per product to comply with the basic requirements of this AD. The average labor rate is $85 per work-hour. Required parts will cost about $0 per product.

Based on these figures, we estimate the cost of this AD to the U.S. operators to be $2,125 or $85 per product.

In addition, we estimate that any necessary follow-on actions would take about 5 work-hours and require parts costing $200, for a cost of $625 per product. We have no way of determining the number of products that may need these actions.

### Authority for This Rulemaking

Title 49 of the United States Code specifies the FAA's authority to issue rules on aviation safety. Subtitle I, section 106, describes the authority of the FAA Administrator. "Subtitle VII: Aviation Programs," describes in more detail the scope of the Agency's authority.

We are issuing this rulemaking under the authority described in "Subtitle VII, Part A, Subpart III, Section 44701: General requirements." Under that section, Congress charges the FAA with promoting safe flight of civil aircraft in air commerce by prescribing regulations for practices, methods, and procedures the Administrator finds necessary for safety in air commerce. This regulation is within the scope of that authority because it addresses an unsafe condition that is likely to exist or develop on products identified in this rulemaking action.

### Regulatory Findings

We determined that this AD will not have federalism implications under Executive Order 13132. This AD will not have a substantial direct effect on the States, on the relationship between the national government and the States, or on the distribution of power and responsibilities among the various levels of government.

For the reasons discussed above, I certify this AD:

(1) Is not a "significant regulatory action" under Executive Order 12866;

(2) Is not a "significant rule" under DOT Regulatory Policies and Procedures (44 FR 11034, February 26, 1979); and

(3) Will not have a significant economic impact, positive or negative, on a substantial number of small entities under the criteria of the Regulatory Flexibility Act.

We prepared a regulatory evaluation of the estimated costs to comply with this AD and placed it in the AD Docket.

### Examining the AD Docket

You may examine the AD docket on the Internet at *http://www.regulations.gov;* or in person at the Docket Management Facility between 9 a.m. and 5 p.m., Monday through Friday, except Federal holidays. The AD docket contains the NPRM, the regulatory evaluation, any comments received, and other information. The street address for the Docket Office (telephone (800) 647–5527) is in the **ADDRESSES** section. Comments will be available in the AD docket shortly after receipt.

### List of Subjects in 14 CFR Part 39

Air transportation, Aircraft, Aviation safety, Incorporation by reference, Safety.

### Adoption of the Amendment

■ Accordingly, under the authority delegated to me by the Administrator, the FAA amends 14 CFR part 39 as follows:

## PART 39—AIRWORTHINESS DIRECTIVES

■ 1. The authority citation for part 39 continues to read as follows:

**Authority:** 49 U.S.C. 106(g), 40113, 44701.

### § 39.13 [Amended]

■ 2. The FAA amends § 39.13 by removing Amendment 39–16280 (75 FR 23577, May 4, 2010) and adding the following new AD:

**2010–10–01 R1 GA 8 Airvan (Pty) Ltd.:** Amendment 39–16425; Docket No. FAA–2010–0463; Directorate Identifier 2010–CE–021–AD.

#### Effective Date

(a) This airworthiness directive (AD) becomes effective October 7, 2010.

#### Affected ADs

(b) This AD revises AD 2010–10–01, Amendment 39–16280.

#### Applicability

(c) This AD applies to the following model and serial number airplanes, certificated in any category:

(i) *Group 1 Airplanes* (retains the actions and applicability from AD 2009–05–01): Model GA8 airplanes, serial numbers GA8–00–004 and up; and

(ii) *Group 2 Airplanes:* Model GA8–TC320 airplanes, all serial numbers.

#### Subject

(d) Air Transport Association of America (ATA) Code 55: Stabilizers.

#### Reason

(e) The mandatory continuing airworthiness information (MCAI) states:

Inspection of a high time aircraft has revealed cracks in the Horizontal Stabiliser rear spar splice plate and inboard main ribs around the area of the Horizontal Stabiliser rear pivot attachment. Additionally, failure of some attach bolts in service may be due to improper assembly.

This amendment is issued to include an applicability matrix (Table 1, page 2) in the compliance section of the service bulletin for improved clarity.

The previous amendment included reference to the GA8–TC 320 variant in the applicability section.

Amendment 2 was issued because the requirement document now contains an inspection for cracking in horizontal stabilisers which have load transferring fittings installed.

Previous amendments of this AD listed the AD requirements in full. Due to the extensive use of diagrams and photographs, it is no longer appropriate or practical to write the requirements of the service bulletin out in full in this AD. All requirements, accomplishment instructions and illustrations are contained in the service bulletin.

The FAA is revising AD 2010–10–01 to allow the use of issue 6 or issue 5 of the service bulletin. An operator is in compliance if the operator chooses to only accomplish issue 5

of the SB. This proposed revision of the FAA's AD will make the FAA AD more consistent with the latest version of the MCAI.

**Actions and Compliance**

(f) *For Group 1 Airplanes:* Unless already done, do the following actions:

(1) Within the next 10 hours time-in-service (TIS) after March 2, 2009 (the effective date retained from AD 2009–05–01):

(i) For all aircraft not incorporating computer numeric control (CNC) machined elevator hinges, inspect and repair the left and right horizontal stabilizer rear pivot attachment installation following instruction "3. Rear Pivot Attachment Inspection," of Gippsland Aeronautics Mandatory Service Bulletin SB–GA8–2002–02, Issue 5, dated November 13, 2008; or Gippsland Aeronautics Mandatory Service Bulletin SB–GA8–2002–02, Issue 6, dated April 21, 2010; and

(ii) For all aircraft, inspect the left and right rear attach bolt mating surfaces for damage or an out of square condition and replace the left and right rear attach bolts following instruction "5. Rear Attach Bolt Replacement," of Gippsland Aeronautics Mandatory Service Bulletin SB–GA8–2002–02, Issue 5, dated November 13, 2008; or Gippsland Aeronautics Mandatory Service Bulletin SB–GA8–2002–02, Issue 6, dated April 21, 2010. Reworking the mating surfaces by spotfacing is no longer acceptable. If the mating surfaces are damaged, not square, or were previously reworked by spotfacing the surface, replace the parts as specified in Gippsland Aeronautics Mandatory Service Bulletin SB–GA8–2002–02, Issue 5, dated November 13, 2008; or Gippsland Aeronautics Mandatory Service Bulletin SB–GA8–2002–02, Issue 6, dated April 21, 2010.

(2) Within the next 10 hours TIS after March 2, 2009 (the effective date retained from AD 2009–05–01) and repetitively thereafter at intervals not to exceed 100 hours TIS or 12 months, whichever occurs first, for all aircraft:

(i) Inspect the horizontal stabilizer externally following instruction "2. External Inspection (Lower flange, Stabilizer rear spar)," of Gippsland Aeronautics Mandatory Service Bulletin SB–GA8–2002–02, Issue 5, dated November 13, 2008; or Gippsland Aeronautics Mandatory Service Bulletin SB–GA8–2002–02, Issue 6, dated April 21, 2010; and

(ii) Inspect the horizontal stabilizer internally following instruction "4. Internal Inspection," of Gippsland Aeronautics Mandatory Service Bulletin SB–GA8–2002–02, Issue 5, dated November 13, 2008; or Gippsland Aeronautics Mandatory Service Bulletin SB–GA8–2002–02, Issue 6, dated April 21, 2010.

(3) If during the inspection required by paragraph (f)(2) of this AD any excessive local deflection or movement of the lower skin surrounding the lower pivot attachment, cracking, or working (loose) rivet is found, before further flight, obtain an FAA-approved repair scheme from the manufacturer and incorporate this repair scheme. Due to FAA policy, the repair scheme/modification for crack damage must include an immediate repair of the crack. The repair scheme cannot be by repetitive inspection only. The repair scheme/modification may incorporate repetitive inspections in addition to the repetitive inspections required in paragraph (f)(2) of this AD. Continued operational flight with un-repaired crack damage is not permitted.

(g) *For Group 2 Airplanes:* Unless already done, do the following actions:

(1) Within the next 10 hours TIS after May 10, 2010 (the effective date retained from AD 2010–10–01):

(i) For all aircraft not incorporating computer numeric control (CNC) machined elevator hinges, inspect and repair the left and right horizontal stabilizer rear pivot attachment installation following instruction "3. Rear Pivot Attachment Inspection," of Gippsland Aeronautics Mandatory Service Bulletin SB–GA8–2002–02, Issue 5, dated November 13, 2008; or Gippsland Aeronautics Mandatory Service Bulletin SB–GA8–2002–02, Issue 6, dated April 21, 2010; and,

(ii) For all aircraft, inspect the left and right rear attach bolt mating surfaces for damage or an out of square condition and replace the left and right rear attach bolts following instruction "5. Rear Attach Bolt Replacement," of Gippsland Aeronautics Mandatory Service Bulletin SB–GA8–2002–02, Issue 5, dated November 13, 2008; or Gippsland Aeronautics Mandatory Service Bulletin SB–GA8–2002–02, Issue 6, dated April 21, 2010. Reworking the mating surfaces by spotfacing is no longer acceptable. If the mating surfaces are damaged, not square, or were previously reworked by spotfacing the surface, before further flight, replace the parts as specified in Gippsland Aeronautics Mandatory Service Bulletin SB–GA8–2002–02, Issue 5, dated November 13, 2008; or Gippsland Aeronautics Mandatory Service Bulletin SB–GA8–2002–02, Issue 6, dated April 21, 2010.

(2) Within the next 10 hours TIS after May 10, 2010 (the effective date retained from AD 2010–10–01) and repetitively thereafter at intervals not to exceed 100 hours TIS or 12 months, whichever occurs first, for all aircraft:

(i) Inspect the horizontal stabilizer externally following instruction "2. External Inspection (Lower flange, Stabilizer rear spar)," of Gippsland Aeronautics Mandatory Service Bulletin SB–GA8–2002–02, Issue 5, dated November 13, 2008; or Gippsland Aeronautics Mandatory Service Bulletin SB–GA8–2002–02, Issue 6, dated April 21, 2010; and

(ii) Inspect the horizontal stabilizer internally following instruction "4. Internal Inspection," of Gippsland Aeronautics Mandatory Service Bulletin SB–GA8–2002–02, Issue 5, dated November 13, 2008; or Gippsland Aeronautics Mandatory Service Bulletin SB–GA8–2002–02, Issue 6, dated April 21, 2010.

(3) If during the inspection required by paragraph (g)(2) of this AD any excessive local deflection or movement of the lower skin surrounding the lower pivot attachment, cracking, or working (loose) rivet is found, before further flight, obtain an FAA-approved repair scheme from the manufacturer and incorporate this repair scheme. Due to FAA policy, the repair scheme/modification for crack damage must include an immediate repair of the crack. The repair scheme cannot be by repetitive inspection only. The repair scheme/modification may incorporate repetitive inspections in addition to the repetitive inspections required in paragraph (g)(2) of this AD. Continued operational flight with un-repaired crack damage is not permitted.

**FAA AD Differences**

**Note:** This AD differs from the MCAI and/or service information as follows:

(1) "Requirement: 1. Daily Inspection (Stabilizer attach bolt)" of the service information requires a daily inspection of the stabilizer attach bolt. The daily inspection is not a requirement of this AD. Instead of the daily inspection, we require you to perform, within 10 hours TIS, "Requirement 3. Rear Pivot Attachment Inspection" and "Requirement 5. Rear Attachment Bolt Replacement" of the service information. Compliance with requirement 3. and 5. is a terminating action for the daily inspection, and we are requiring these within 10 hours TIS after the effective date of AD 2009–05–01 for Group 1 airplanes and AD 2010–10–01 for Group 2 airplanes.

(2) "Requirement: 2. External Inspection (Lower flange, Stabilizer rear spar)" of the service information does not specify any action if excessive local deflection or movement of lower skin, cracking, or working (loose) rivet is found. We require obtaining and incorporating an FAA-approved repair scheme from the manufacturer before further flight.

(3) The MCAI does not state if further flight with known cracks is allowed. FAA policy is to not allow further flight with known cracks in critical structure. We require that if any cracks are found when accomplishing the inspection required in paragraphs (f)(2) and (g)(2) of this AD, you must repair the cracks before further flight.

(4) The service information does not state that parts with spotfaced nut and bolt mating surfaces require replacement. However, the service information no longer allows reworking of the mating surfaces by spotfacing. We require that if any nut and bolt surfaces were previously reworked by spotfacing, you must replace the parts.

**Other FAA AD Provisions**

(g) The following provisions also apply to this AD:

(1) Alternative Methods of Compliance (AMOCs): The Manager, Standards Office, FAA, has the authority to approve AMOCs for this AD, if requested using the procedures found in 14 CFR 39.19. Send information to ATTN: Doug Rudolph, Aerospace Engineer, FAA, Small Airplane Directorate, 901 Locust, Room 301, Kansas City, Missouri 64106; telephone: (816) 329–4059; fax: (816) 329–4090. Before using any approved AMOC on any airplane to which the AMOC applies, notify your appropriate principal inspector (PI) in the FAA Flight Standards District Office (FSDO), or lacking a PI, your local FSDO.

(2) Airworthy Product: For any requirement in this AD to obtain corrective actions from a manufacturer or other source, use these actions if they are FAA-approved. Corrective actions are considered FAA-approved if they are approved by the State of Design Authority (or their delegated agent). You are required to assure the product is airworthy before it is returned to service.

(3) Reporting Requirements: For any reporting requirement in this AD, under the provisions of the Paperwork Reduction Act (44 U.S.C. 3501 *et seq.*), the Office of Management and Budget (OMB) has approved the information collection requirements and has assigned OMB Control Number 2120–0056.

**Related Information**

(h) Refer to MCAI Civil Aviation Safety Authority AD No. AD/GA8/5, Amdt 4, dated May 11, 2010; Gippsland Aeronautics Mandatory Service Bulletin SB–GA8–2002–02, Issue 5, dated November 13, 2008; and Gippsland Aeronautics Mandatory Service Bulletin SB–GA8–2002–02, Issue 6, dated April 21, 2010, for related information.

**Material Incorporated by Reference**

(h) You must use Gippsland Aeronautics Mandatory Service Bulletin SB–GA8–2002–02, Issue 5, dated November 13, 2008; and Gippsland Aeronautics Mandatory Service Bulletin SB–GA8–2002–02, Issue 6, dated April 21, 2010, to do the actions required by this AD, unless the AD specifies otherwise.

(1) The Director of the Federal Register approved the incorporation by reference of Gippsland Aeronautics Mandatory Service Bulletin SB–GA8–2002–02, Issue 6, dated April 21, 2010, under 5 U.S.C. 552(a) and 1 CFR part 51.

(2) On March 2, 2009 (74 FR 8159; February 24, 2009), the Director of the Federal Register previously approved the incorporation by reference of Gippsland Aeronautics Mandatory Service Bulletin SB–GA8–2002–02, Issue 5, dated November 13, 2008.

(3) For service information identified in this AD, contact Gippsland Aeronautics, Attn: Technical Services, P.O. Box 881, Morwell Victoria 3840, Australia; telephone: + 61 03 5172 1200; fax: +61 03 5172 1201; Internet: *http://www.gippsaero.com.*

(4) You may review copies of the service information incorporated by reference for this AD at the FAA, Central Region, Office of the Regional Counsel, 901 Locust, Kansas City, Missouri 64106. For information on the availability of this material at the Central Region, call (816) 329–3768.

(5) You may also review copies of the service information incorporated by reference for this AD at the National Archives and Records Administration (NARA). For information on the availability of this material at NARA, call (202) 741–6030, or go to: *http://www.archives.gov/federal_register/code_of_federal_regulations/ibr_locations.html.*

Issued in Kansas City, Missouri, on August 25, 2010.

**John R. Colomy,**

*Acting Manager, Small Airplane Directorate, Aircraft Certification Service.*

[FR Doc. 2010–21725 Filed 9–1–10; 8:45 am]

BILLING CODE 4910–13–P

---

## DEPARTMENT OF TRANSPORTATION

## Federal Aviation Administration

## 14 CFR Part 39

**[Docket No. FAA–2010–0851; Directorate Identifier 2010–NM–171–AD; Amendment 39–16424; AD 2010–18–11]**

**RIN 2120–AA64**

## Airworthiness Directives; Bombardier, Inc. Model CL–600–2C10 (Regional Jet Series 700, 701, & 702); Model CL–600–2D15 (Regional Jet Series 705); and Model CL–600–2D24 (Regional Jet Series 900) Airplanes

**AGENCY:** Federal Aviation Administration (FAA), Department of Transportation (DOT).

**ACTION:** Final rule; request for comments.

**SUMMARY:** We are adopting a new airworthiness directive (AD) for the products listed above. This AD results from mandatory continuing airworthiness information (MCAI) originated by an aviation authority of another country to identify and correct an unsafe condition on an aviation product. The MCAI describes the unsafe condition as:

During maintenance at the vendor's facility, some HSTAs [horizontal stabilizer trim actuators] were assembled with the incorrect load bearing balls. The material of these discrepant balls has lower wear characteristics and as such, has a shorter expected life. If not corrected, this condition can result in the HSTA jam leading to difficulties in controlling the aircraft.

* * * * *

The unsafe condition is possible loss of controllability of the airplane. This AD requires actions that are intended to address the unsafe condition described in the MCAI.

**DATES:** This AD becomes effective September 17, 2010.

The Director of the Federal Register approved the incorporation by reference of a certain publication listed in the AD as of September 17, 2010.

We must receive comments on this AD by October 18, 2010.

**ADDRESSES:** You may send comments by any of the following methods:

- *Federal eRulemaking Portal:* Go to *http://www.regulations.gov*. Follow the instructions for submitting comments.
- *Fax:* (202) 493–2251.
- *Mail:* U.S. Department of Transportation, Docket Operations, M–30, West Building Ground Floor, Room W12–140, 1200 New Jersey Avenue, SE., Washington, DC 20590.
- *Hand Delivery:* U.S. Department of Transportation, Docket Operations, M–30, West Building Ground Floor, Room W12–40, 1200 New Jersey Avenue, SE., Washington, DC, between 9 a.m. and 5 p.m., Monday through Friday, except Federal holidays.

**Examining the AD Docket**

You may examine the AD docket on the Internet at *http://www.regulations.gov;* or in person at the Docket Operations office between 9 a.m. and 5 p.m., Monday through Friday, except Federal holidays. The AD docket contains this AD, the regulatory evaluation, any comments received, and other information. The street address for the Docket Operations office (telephone (800) 647–5527) is in the **ADDRESSES** section. Comments will be available in the AD docket shortly after receipt.

**FOR FURTHER INFORMATION CONTACT:** Christopher Alfano, Aerospace Engineer, Airframe and Mechanical Systems Branch, ANE–171, FAA, New York Aircraft Certification Office (ACO), 1600 Stewart Avenue, Suite 410, Westbury, New York 11590; telephone (516) 228–7340; fax (516) 794–5531.

**SUPPLEMENTARY INFORMATION:**

**Discussion**

Transport Canada Civil Aviation (TCCA), which is the aviation authority for Canada, has issued Canadian Airworthiness Directive CF–2010–20, dated July 19, 2010 (referred to after this as "the MCAI"), to correct an unsafe condition for the specified products. The MCAI states:

During maintenance at the vendor's facility, some HSTAs were assembled with the incorrect load bearing balls. The material of these discrepant balls has lower wear characteristics and as such, has a shorter expected life. If not corrected, this condition can result in the HSTA jam leading to difficulties in controlling the aircraft.

This directive mandates incorporation of the HSTA with the correct load bearing balls.

The unsafe condition is possible loss of controllability of the airplane. The corrective action requires inspecting to determine the serial number of the HSTAs. You may obtain further information by examining the MCAI in the AD docket.

**Relevant Service Information**

Bombardier has issued Service Bulletin 670BA–27–057, dated June 14, 2010. The actions described in this service information are intended to correct the unsafe condition identified in the MCAI.

**FAA's Determination and Requirements of This AD**

This product has been approved by the aviation authority of another country, and is approved for operation in the United States. Pursuant to our bilateral agreement with the State of Design Authority, we have been notified of the unsafe condition described in the MCAI and service information referenced above. We are issuing this AD because we evaluated all pertinent information and determined the unsafe condition exists and is likely to exist or develop on other products of the same type design.

**Differences Between the AD and the MCAI or Service Information**

We have reviewed the MCAI and related service information and, in general, agree with their substance. But we might have found it necessary to use different words from those in the MCAI to ensure the AD is clear for U.S. operators and is enforceable. In making these changes, we do not intend to differ substantively from the information provided in the MCAI and related service information.

We might also have required different actions in this AD from those in the MCAI in order to follow FAA policies. Any such differences are highlighted in a NOTE within the AD.

**FAA's Determination of the Effective Date**

An unsafe condition exists that requires the immediate adoption of this AD. The FAA has found that the risk to the flying public justifies waiving notice and comment prior to adoption of this rule because some HSTAs were assembled with load bearing balls that have lower wear characteristics and a shorter life expectancy. If not corrected, this condition can result in the HSTA jam leading to difficulties in controlling the airplane. The unsafe condition is possible loss of controllability of the airplane. Therefore, we determined that notice and opportunity for public comment before issuing this AD are impracticable and that good cause exists for making this amendment effective in fewer than 30 days.

**Comments Invited**

This AD is a final rule that involves requirements affecting flight safety, and we did not precede it by notice and opportunity for public comment. We invite you to send any written relevant data, views, or arguments about this AD. Send your comments to an address listed under the **ADDRESSES** section. Include "Docket No. FAA–2010–0851; Directorate Identifier 2010–NM–171–AD" at the beginning of your comments. We specifically invite comments on the overall regulatory, economic, environmental, and energy aspects of this AD. We will consider all comments received by the closing date and may amend this AD because of those comments.

We will post all comments we receive, without change, to *http://www.regulations.gov*, including any personal information you provide. We will also post a report summarizing each substantive verbal contact we receive about this AD.

**Authority for This Rulemaking**

Title 49 of the United States Code specifies the FAA's authority to issue rules on aviation safety. Subtitle I, section 106, describes the authority of the FAA Administrator. "Subtitle VII: Aviation Programs," describes in more detail the scope of the Agency's authority.

We are issuing this rulemaking under the authority described in "Subtitle VII, Part A, Subpart III, Section 44701: General requirements." Under that section, Congress charges the FAA with promoting safe flight of civil aircraft in air commerce by prescribing regulations for practices, methods, and procedures the Administrator finds necessary for safety in air commerce. This regulation is within the scope of that authority because it addresses an unsafe condition that is likely to exist or develop on products identified in this rulemaking action.

**Regulatory Findings**

We determined that this AD will not have federalism implications under Executive Order 13132. This AD will not have a substantial direct effect on the States, on the relationship between the national government and the States, or on the distribution of power and responsibilities among the various levels of government.

*For the reasons discussed above, I certify this AD:*

1. Is not a "significant regulatory action" under Executive Order 12866;

2. Is not a "significant rule" under the DOT Regulatory Policies and Procedures (44 FR 11034, February 26, 1979); and

3. Will not have a significant economic impact, positive or negative, on a substantial number of small entities under the criteria of the Regulatory Flexibility Act.

We prepared a regulatory evaluation of the estimated costs to comply with this AD and placed it in the AD docket.

**List of Subjects in 14 CFR Part 39**

Air transportation, Aircraft, Aviation safety, Incorporation by reference, Safety.

**Adoption of the Amendment**

■ Accordingly, under the authority delegated to me by the Administrator, the FAA amends 14 CFR part 39 as follows:

## PART 39—AIRWORTHINESS DIRECTIVES

■ 1. The authority citation for part 39 continues to read as follows:

**Authority:** 49 U.S.C. 106(g), 40113, 44701.

**§ 39.13 [Amended]**

■ 2. The FAA amends § 39.13 by adding the following new AD:

**2010–18–11 Bombardier, Inc.:** Amendment 39–16424. Docket No. FAA–2010–0851; Directorate Identifier 2010–NM–171–AD.

**Effective Date**

(a) This airworthiness directive (AD) becomes effective September 17, 2010.

**Affected ADs**

(b) None.

**Applicability**

(c) This AD applies to Bombardier, Inc. Model CL–600–2C10 (Regional Jet Series 700, 701, & 702); Model CL–600–2D15 (Regional Jet Series 705); and Model CL–600–2D24 (Regional Jet Series 900) airplanes; certificated in any category; having horizontal stabilizer trim actuators (HSTAs) with part number (P/N) 8489–7 or 8489–7R.

**Subject**

(d) Air Transport Association (ATA) of America Code 27: Flight controls.

**Reason**

(e) The mandatory continued airworthiness information (MCAI) states:

During maintenance at the vendor's facility, some HSTAs were assembled with the incorrect load bearing balls. The material of these discrepant balls has lower wear characteristics and as such, has a shorter expected life. If not corrected, this condition can result in the HSTA jam leading to difficulties in controlling the aircraft.

* * * * *

The unsafe condition is possible loss of controllability of the airplane.

**Compliance**

(f) You are responsible for having the actions required by this AD performed within the compliance times specified, unless the actions have already been done.

**Actions**

(g) Within 500 flight cycles after the effective date of this AD: Inspect HSTAs having P/Ns 8489–7 and 8489–7R to determine if the serial numbers (S/Ns) identified in paragraph 1.A., "Effectivity," of Bombardier Service Bulletin 670BA–27–057, dated June 14, 2010, are installed. A review of airplane maintenance records is acceptable in lieu of this inspection if the serial number of the HSTA can be conclusively determined from that review.

(1) For any HSTA with a serial number that is not identified in paragraph 1.A., "Effectivity," of Bombardier Service Bulletin 670BA–27–057, dated June 14, 2010: No further action is required by paragraph (g) of this AD.

(2) For any HSTA with a serial number that is identified in paragraph 1.A., "Effectivity," of Bombardier Service Bulletin 670BA–27–057, dated June 14, 2010: Replace the HSTA with a serviceable HSTA, in accordance with the Accomplishment Instructions of Bombardier Service Bulletin 670BA–27–057, dated June 14, 2010, at the applicable time specified by paragraph (g)(2)(i), (g)(2)(ii), (g)(2)(iii), or (g)(2)(iv) of this AD.

**Note 1:** Bombardier Service Bulletin 670BA–27–057, dated June 14, 2010, references Sagem SA Service Bulletin 8489–27–006, dated December 8, 2009, as an additional source of guidance for modifying the HSTA. Sagem SA Service Bulletin 8489–27–006, dated December 8, 2009, references Ratier-Figeac Service Bulletin RF–DSC–075–07, Version 03, dated November 10, 2009, as an additional source of guidance for modifying the HSTA. The suffix "A" after the serial number indicates serviceable HSTAs that have been modified.

(i) For any HSTA that has accumulated less than or equal to 8,000 flight cycles as of the effective date of this AD: Before the HSTA accumulates 10,000 flight cycles.

(ii) For any HSTA that has accumulated more than 8,000 flight cycles but less than or equal to 10,000 flight cycles as of the effective date of this AD: Before the HSTA accumulates an additional 2,000 flight cycles, but no later than 11,000 flight cycles on the HSTA.

(iii) For any HSTA that has accumulated more than 10,000 flight cycles but less than or equal to 12,000 flight cycles as of the effective date of this AD: Before the HSTA accumulates an additional 1,000 flight cycles, but no later than 12,500 flight cycles on the HSTA.

(iv) For any HSTAs that has accumulated more than 12,000 flight cycles as of the effective date of this AD: Before the HSTA accumulates an additional 500 flight cycles.

(h) As of the effective date of this AD, no person may install an HSTA, having P/N 8489–7 or 8489–7R, with a serial number identified in paragraph 1.A., "Effectivity," of Bombardier Service Bulletin 670BA–27–057, dated June 14, 2010, on any airplane.

**FAA AD Differences**

**Note 2:** This AD differs from the MCAI and/or service information as follows: Canadian Airworthiness Directive CF–2010–20, dated July 19, 2010, refers to an incorrect date of April 28, 2010, for Bombardier Service Bulletin 670BA–27–057. The correct date for Bombardier Service Bulletin 670BA–27–057 is June 14, 2010.

**Other FAA AD Provisions**

(i) The following provisions also apply to this AD:

(1) *Alternative Methods of Compliance (AMOCs):* The Manager, New York Aircraft Certification Office (ACO), ANE–170, FAA, has the authority to approve AMOCs for this AD, if requested using the procedures found in 14 CFR 39.19. Send information to *Attn:* Program Manager, Continuing Operational Safety, FAA, New York ACO, 1600 Stewart Avenue, Suite 410, Westbury, New York 11590; telephone 516–228–7300; fax 516–794–5531. Before using any approved AMOC on any airplane to which the AMOC applies, notify your principal maintenance inspector (PMI) or principal avionics inspector (PAI), as appropriate, or lacking a principal inspector, your local Flight Standards District Office. The AMOC approval letter must specifically reference this AD.

(2) *Airworthy Product:* For any requirement in this AD to obtain corrective actions from a manufacturer or other source, use these actions if they are FAA-approved. Corrective actions are considered FAA-approved if they are approved by the State of Design Authority (or their delegated agent). You are required to ensure the product is airworthy before it is returned to service.

(3) *Reporting Requirements:* For any reporting requirement in this AD, under the provisions of the Paperwork Reduction Act (44 U.S.C. 3501 *et seq.*), the Office of Management and Budget (OMB) has approved the information collection requirements and has assigned OMB Control Number 2120–0056.

**Related Information**

(j) Refer to MCAI Canadian Airworthiness Directive CF–2010–20, dated July 19, 2010; and Bombardier Service Bulletin 670BA–27–057, dated June 14, 2010; for related information.

**Material Incorporated by Reference**

(k) You must use Bombardier Service Bulletin 670BA–27–057, dated June 14, 2010, to do the actions required by this AD, unless the AD specifies otherwise.

(1) The Director of the Federal Register approved the incorporation by reference of this service information under 5 U.S.C. 552(a) and 1 CFR part 51.

(2) For service information identified in this AD, contact Bombardier, Inc., 400 Côte-Vertu Road West, Dorval, Québec H4S 1Y9, Canada; telephone 514–855–5000; fax 514–855–7401; e-mail *thd.crj@aero.bombardier.com;* Internet *http://www.bombardier.com.*

(3) You may review copies of the service information at the FAA, Transport Airplane Directorate, 1601 Lind Avenue, SW., Renton, Washington. For information on the availability of this material at the FAA, call 425–227–1221.

(4) You may also review copies of the service information that is incorporated by reference at the National Archives and Records Administration (NARA). For information on the availability of this material at NARA, call 202–741–6030, or go to: *http://www.archives.gov/federal_register/code_of_federal_regulations/ibr_locations.html.*

Issued in Renton, Washington, on August 20, 2010.

**Jeffrey E. Duven,**

*Acting Manager, Transport Airplane Directorate, Aircraft Certification Service.*

[FR Doc. 2010–21563 Filed 9–1–10; 8:45 am]

BILLING CODE 4910–13–P

## DEPARTMENT OF TRANSPORTATION

## Federal Aviation Administration

## 14 CFR Part 39

**[Docket No. FAA–2009–1110; Directorate Identifier 2009–NM–116–AD; Amendment 39–16421; AD 2010–18–08]**

**RIN 2120–AA64**

## Airworthiness Directives; Bombardier, Inc. Model CL–600–2C10 (Regional Jet Series 700, 701 & 702), CL–600–2D15 (Regional Jet Series 705), and CL–600–2D24 (Regional Jet Series 900) Airplanes

**AGENCY:** Federal Aviation Administration (FAA), Department of Transportation (DOT).

**ACTION:** Final rule.

**SUMMARY:** We are superseding an existing airworthiness directive (AD) for the products listed above. This AD results from mandatory continuing airworthiness information (MCAI) originated by an aviation authority of another country to identify and correct an unsafe condition on an aviation product. The MCAI describes the unsafe condition as:

During testing, it was discovered that when the outflow valve (OFV) manual mode connector is not connected, the manual mode motor and altitude limitation are not properly tested. Consequently, a disconnect of the OFV manual mode and/or a related wiring failure could potentially result in a dormant loss of several CPC [cabin pressure control] backup/safety functions, including OFV manual control, altitude limitation, emergency depressurization and smoke clearance. * * *

* * * * *

We are issuing this AD to require actions to correct the unsafe condition on these products.

**DATES:** This AD becomes effective October 7, 2010.

The Director of the Federal Register approved the incorporation by reference of a certain publication listed in this AD as of October 7, 2010.

On May 29, 2009 (74 FR 22646, May 14, 2009), the Director of the Federal Register approved the incorporation by reference of certain other publications listed in this AD.

**ADDRESSES:** You may examine the AD docket on the Internet at *http://www.regulations.gov* or in person at the U.S. Department of Transportation, Docket Operations, M–30, West Building Ground Floor, Room W12–140, 1200 New Jersey Avenue, SE., Washington, DC.

**FOR FURTHER INFORMATION CONTACT:** Fabio Buttitta, Aerospace Engineer, Airframe and Mechanical Systems Branch, ANE–171, FAA, New York Aircraft Certification Office, 1600 Stewart Avenue, Suite 410, Westbury, New York 11590; telephone (516) 228–7303; fax (516) 794–5531.

**SUPPLEMENTARY INFORMATION:**

## Discussion

We issued a notice of proposed rulemaking (NPRM) to amend 14 CFR part 39 to include an AD that would apply to the specified products. That NPRM was published in the **Federal Register** on December 3, 2009 (74 FR 63333), and proposed to supersede AD 2009–10–10, Amendment 39–15906 (74 FR 22646, May 14, 2009). That NPRM proposed to correct an unsafe condition for the specified products. This AD retains the requirements of AD 2009–10–10 and also requires modification (software update) of the cabin pressure control units and cabin pressure control panels.

## Comments

We gave the public the opportunity to participate in developing this AD. We considered the comments received.

### Request To Allow Installation of a Certain Cabin Pressure Control (CPC) Part Number

After the comment period for the NPRM closed, American Eagle Airlines (AEA) made an ex parte call to the FAA to request that we allow the installation of CPC units having part number (P/N) GG670–98002–9 that were modified in accordance with Bombardier Service Bulletin 670BA–21–030, dated December 22, 2009, as a method of compliance with paragraph (g)(1) of the NPRM. AEA did not provide additional supporting information to substantiate this request.

We agree with the commenter's request. After contacting Transport Canada Civil Aviation (TCCA) for further details, we determined that installation of certain CPC units modified according to Bombardier Service Bulletin 670BA–21–030, dated December 22, 2009, is acceptable for compliance with paragraph (g)(1) of this AD. We have added new paragraph (h) to this AD to provide this method of compliance, and have re-identified subsequent paragraphs accordingly.

### Request To Allow Installation of Certain Modified CPCs and Cabin Pressure Control Panels (CPCPs)

AEA also requests allowing certain CPC units and CPCPs that were modified in accordance with certain Liebherr service bulletins (identified in the following table) as a method of compliance with the actions specified in paragraphs (g)(1) and (g)(2) of the NPRM. AEA states that those Liebherr service bulletins were approved as an alternative method of compliance (AMOC) to AD 2009–10–10. AEA also suggests that allowing the use of those certain Liebherr service bulletins would prevent the need for future AMOCs.

LIEBHERR SERVICE BULLETINS

| Liebherr Service Bulletin— | Revision— | Dated— |
|---|---|---|
| GG670–98001–21–03 | Original | March 21, 2006. |
| GG670–98001–21–03 | 1 | November 15, 2007. |
| GG670–98002–21–02 | Original | April 21, 2006. |
| GG670–98002–21–02 | 1 | November 15, 2007. |

We partially agree with the commenter's request. Since these Liebherr service bulletins were referenced as sources of additional guidance in Bombardier Service Bulletin A670BA–21–022, dated August 3, 2006, that was required by AD 2009–10–10, we agree to provide credit for actions done according to those Liebherr service bulletins if the actions were accomplished before the effective date of AD 2009–10–10. We have added paragraph (i) to this AD to provide this credit.

## Explanation of Change to Applicability

We have revised the NPRM to identify the legal name of the manufacturer as published in the most recent type certificate data sheet for the affected airplane models.

## Explanation of Change to AMOC Paragraph

We have revised paragraph (j)(1) of this AD to give credit for AMOCs approved previously for AD 2009–10–10.

## Conclusion

We reviewed the available data, including the comments received, and determined that air safety and the public interest require adopting the AD with the changes described previously. We determined that these changes will not increase the economic burden on any operator or increase the scope of the AD.

## Differences Between This AD and the MCAI or Service Information

We have reviewed the MCAI and related service information and, in general, agree with their substance. But we might have found it necessary to use different words from those in the MCAI to ensure the AD is clear for U.S. operators and is enforceable. In making these changes, we do not intend to differ substantively from the information provided in the MCAI and related service information.

We might also have required different actions in this AD from those in the MCAI in order to follow our FAA policies. Any such differences are highlighted in a note within the AD.

## Explanation of Change to Costs of Compliance

Since issuance of the NPRM, we have increased the labor rate used in the Costs of Compliance from $80 per work-hour to $85 per work-hour. The Costs of Compliance information, below, reflects this increase in the specified hourly labor rate.

## Costs of Compliance

We estimate that this AD will affect about 353 products of U.S. registry.

The actions that are required by AD 2009–10–10 and retained in this AD take about 2 work-hours per product, at an average labor rate of $85 per work hour. Based on these figures, the estimated cost of the currently required actions is $170 per product.

We estimate that it will take about 3 work-hours per product to comply with the new basic requirements of this AD. The average labor rate is $85 per work-hour. Required parts will cost about $43,000 per product. Where the service information lists required parts costs that are covered under warranty, we have assumed that there will be no charge for these costs. As we do not control warranty coverage for affected parties, some parties may incur costs higher than estimated here. Based on these figures, we estimate the cost of this AD to the U.S. operators to be $15,269,015, or $43,255 per product.

## Authority for This Rulemaking

Title 49 of the United States Code specifies the FAA's authority to issue rules on aviation safety. Subtitle I, section 106, describes the authority of the FAA Administrator. "Subtitle VII: Aviation Programs," describes in more detail the scope of the Agency's authority.

We are issuing this rulemaking under the authority described in "Subtitle VII, Part A, Subpart III, Section 44701: General requirements." Under that section, Congress charges the FAA with promoting safe flight of civil aircraft in air commerce by prescribing regulations for practices, methods, and procedures the Administrator finds necessary for safety in air commerce. This regulation is within the scope of that authority because it addresses an unsafe condition that is likely to exist or develop on products identified in this rulemaking action.

## Regulatory Findings

We determined that this AD will not have federalism implications under Executive Order 13132. This AD will not have a substantial direct effect on the States, on the relationship between the national government and the States, or on the distribution of power and responsibilities among the various levels of government.

For the reasons discussed above, I certify this AD:

1. Is not a "significant regulatory action" under Executive Order 12866;

2. Is not a "significant rule" under the DOT Regulatory Policies and Procedures (44 FR 11034, February 26, 1979); and

3. Will not have a significant economic impact, positive or negative, on a substantial number of small entities under the criteria of the Regulatory Flexibility Act.

We prepared a regulatory evaluation of the estimated costs to comply with this AD and placed it in the AD docket.

## Examining the AD Docket

You may examine the AD docket on the Internet at *http://www.regulations.gov;* or in person at the Docket Operations office between 9 a.m. and 5 p.m., Monday through Friday, except Federal holidays. The AD docket contains the NPRM, the regulatory evaluation, any comments received, and other information. The street address for the Docket Operations office (telephone (800) 647–5527) is in the **ADDRESSES** section. Comments will be available in the AD docket shortly after receipt.

## List of Subjects in 14 CFR Part 39

Air transportation, Aircraft, Aviation safety, Incorporation by reference, Safety.

## Adoption of the Amendment

■ Accordingly, under the authority delegated to me by the Administrator, the FAA amends 14 CFR part 39 as follows:

## PART 39—AIRWORTHINESS DIRECTIVES

■ 1. The authority citation for part 39 continues to read as follows:

**Authority:** 49 U.S.C. 106(g), 40113, 44701.

### § 39.13 [Amended]

■ 2. The FAA amends § 39.13 by removing Amendment 39–15906 (74 FR 22646, May 14, 2009) and adding the following new AD:

**2010–18–08 Bombardier, Inc:** Amendment 39–16421. Docket No. FAA–2009–1110; Directorate Identifier 2009–NM–116–AD.

**Effective Date**

(a) This airworthiness directive (AD) becomes effective October 7, 2010.

**Affected ADs**

(b) This AD supersedes AD 2009–10–10, Amendment 39–15906.

**Applicability**

(c) This AD applies to Bombardier, Inc. Model CL–600–2C10 (Regional Jet Series 700, 701, & 702) airplanes, certificated in any category, serial numbers 10003 through 10260 inclusive; and Model CL–600–2D15 (Regional Jet Series 705) and CL–600–2D24 (Regional Jet Series 900) airplanes, certificated in any category, serial numbers 15001 through 15095 inclusive.

**Subject**

(d) Air Transport Association (ATA) of America Code 21: Air Conditioning.

**Reason**

(e) The mandatory continuing airworthiness information (MCAI) states:

During testing, it was discovered that when the outflow valve (OFV) manual mode connector is not connected, the manual mode motor and altitude limitation are not properly tested. Consequently, a disconnect of the OFV manual mode and/or a related wiring failure could potentially result in a dormant loss of several CPC [cabin pressure control] backup/safety functions, including OFV manual control, altitude limitation, emergency depressurization and smoke clearance. This deficiency is applicable to CPC units, Part Number (P/N) GG670–98002–3 and –5, and CPCP [cabin pressure control panel], Part Number GG670–98001–5, –7 and –9.

This [Canadian] directive mandates an interim repetitive check of the OFV manual mode motor and altitude limitation functions, followed by modification (software update) of the CPC units and the CPCP.

The corrective action for findings of improper OFV manual mode motor and altitude limitation functions is replacing the valve with a new or serviceable valve.

**Restatement of Requirements of AD 2009–10–10**

**Actions and Compliance**

(f) Unless already done, do the following actions. Within 450 flight hours after May 29, 2009 (the effective date of AD 2009–10–10), inspect the OFV for proper operation of the manual mode motor and altitude limitation functions, in accordance with Part A of the Accomplishment Instructions of Bombardier Alert Service Bulletin A670BA–21–022, dated August 3, 2006 ("the service bulletin"). If the OFV manual mode motor or altitude limitation functions do not operate properly, before further flight, do the actions specified in paragraphs (f)(1) and (f)(2) of this AD. Repeat the inspection thereafter at intervals not to exceed 450 flight hours. Accomplishing the actions specified in paragraph (g) of this AD terminates the requirements of this paragraph.

(1) Make sure that the electrical connectors, MPE23P1 and MPE23P2, are connected to the OFV.

(2) Repeat the inspection of the OFV for proper operation of the manual mode motor and altitude limitation functions, in accordance with Part A of the service bulletin. If the OFV manual mode motor or altitude limitation functions do not operate properly, before further flight, replace the OFV with a new or serviceable valve in accordance with Tasks 21–32–01–000–801 and 21–32–01–400–801 of the Bombardier CRJ Regional Jet Series Aircraft Maintenance Manual, CSP B–001, Part 2, Volume 1, Revision 28, dated January 20, 2009, and do the inspection of the OFV specified in paragraph (f) of this AD.

**New Requirements of This AD**

**Actions and Compliance**

(g) Unless already done, do the following actions.

(1) Prior to accomplishing the actions specified in paragraph (g)(2) of this AD: Install modified or new CPC units, P/N GG670–98002–7, in accordance with Part B of the Accomplishment Instructions of Bombardier Alert Service Bulletin A670BA–21–022, dated August 3, 2006.

(2) Within 4,500 flight hours after the effective date of this AD: Install modified or

new CPCPs, P/N GG670–98001–11, in accordance with Part C of the Accomplishment Instructions of Bombardier Alert Service Bulletin A670BA–21–022, dated August 3, 2006. Doing the actions required by paragraph (g)(2) of this AD terminates the requirements of paragraph (f) of this AD.

(h) Installing CPC units, P/N GG670–98002–9, in accordance with Bombardier Service Bulletin 670BA–21–030, dated December 22, 2009, is acceptable for compliance with the corresponding requirements of paragraph (g)(1) of this AD.

(i) Actions done before May 29, 2009, in accordance with a Liebherr service bulletin identified in Table 1 of this AD, are acceptable for compliance with the corresponding requirements of paragraph (g)(1) or (g)(2) of this AD.

TABLE 1—LIEBHERR SERVICE BULLETINS

| Liebherr Service Bulletin— | Revision— | Dated— |
|---|---|---|
| GG670–98001–21–03 | Original | March 21, 2006. |
| GG670–98001–21–03 | 1 | November 15, 2007. |
| GG670–98002–21–02 | Original | April 21, 2006. |
| GG670–98002–21–02 | 1 | November 15, 2007. |

**FAA AD Differences**

**Note 1:** This AD differs from the MCAI and/or service information as follows: The MCAI and Bombardier Alert Service Bulletin A670BA–21–022, dated August 3, 2006, do not describe corrective actions for findings of improper OFV manual mode motor and altitude limitation functions. This AD requires the actions in paragraphs (f)(1) and (f)(2) of this AD, which include replacing the valve if the OFV manual mode motor or altitude limitation functions do not operate properly.

**Other FAA AD Provisions**

(j) The following provisions also apply to this AD:

(1) Alternative Methods of Compliance (AMOCs): The Manager, New York Aircraft Certification Office (ACO), ANE–170, FAA, has the authority to approve AMOCs for this AD, if requested using the procedures found in 14 CFR 39.19. Send information to ATTN: Program Manager, Continuing Operational Safety, FAA, New York ACO, 1600 Stewart Avenue, Suite 410, Westbury, New York 11590; telephone (516) 228–7300; fax (516) 794–5531. Before using any approved AMOC on any airplane to which the AMOC applies, notify your principal maintenance inspector (PMI) or principal avionics inspector (PAI), as appropriate, or lacking a principal inspector, your local Flight Standards District Office. The AMOC approval letter must specifically reference this AD. AMOCs approved previously in accordance with AD 2009–10–10 are approved as AMOCs for the corresponding provisions of this AD.

(2) Airworthy Product: For any requirement in this AD to obtain corrective actions from a manufacturer or other source, use these actions if they are FAA-approved. Corrective actions are considered FAA-approved if they are approved by the State of Design Authority (or their delegated agent). You are required to assure the product is airworthy before it is returned to service.

(3) Reporting Requirements: For any reporting requirement in this AD, under the provisions of the Paperwork Reduction Act (44 U.S.C. 3501 *et seq.*), the Office of Management and Budget (OMB) has approved the information collection requirements and has assigned OMB Control Number 2120–0056.

**Related Information**

(k) Refer to MCAI Canadian Airworthiness Directive CF–2009–08R1, dated April 13, 2010; and the service information identified in Table 2 of this AD; for related information.

TABLE 2—RELATED SERVICE INFORMATION

| Bombardier Service information | Revision level | Date |
|---|---|---|
| Bombardier Alert Service Bulletin A670BA–21–022 | Original | August 3, 2006. |
| Bombardier Service Bulletin 670BA–21–030 | Original | December 22, 2009. |
| Task 21–32–01–000–801 of the Bombardier CRJ Regional Jet Series Aircraft Maintenance Manual, CSP B–001, Part 2, Volume 1. | 28 | January 20, 2009. |
| Task 21–32–01–400–801, of the Bombardier CRJ Regional Jet Series Aircraft Maintenance Manual, CSP B–001, Part 2, Volume 1. | 28 | January 20, 2009. |

**Material Incorporated by Reference**

(l) You must use the applicable service information identified in Table 3 of this AD, to do the actions required by this AD, unless the AD specifies otherwise. If accomplished, you must use Bombardier Service Bulletin 670BA–21–030, dated December 22, 2009, to do the optional actions specified by this AD, unless the AD specifies otherwise.

TABLE 3—REQUIRED MATERIAL INCORPORATED BY REFERENCE

| Bombardier Service information | Revision level | Date |
|---|---|---|
| Bombardier Alert Service Bulletin A670BA–21–022 | Original | August 3, 2006. |
| Task 21–32–01–000–801 of the Bombardier CRJ Regional Jet Series Aircraft Maintenance Manual, CSP B–001, Part 2, Volume 1. | 28 | January 20, 2009. |
| Task 21–32–01–400–801, of the Bombardier CRJ Regional Jet Series Aircraft Maintenance Manual, CSP B–001, Part 2, Volume 1. | 28 | January 20, 2009. |

(1) The Director of the Federal Register approved the incorporation by reference of Bombardier Service Bulletin 670BA–21–030, dated December 22, 2009, under 5 U.S.C. 552(a) and 1 CFR part 51.

(2) The Director of the Federal Register previously approved the incorporation by reference of the service information contained in Table 4 of this AD on May 29, 2009 (74 FR 22646, May 14, 2009).

TABLE 4—MATERIAL PREVIOUSLY INCORPORATED BY REFERENCE

| Bombardier Service information | Revision level | Date |
|---|---|---|
| Bombardier Alert Service Bulletin A670BA–21–022 | Original | August 3, 2006. |
| Task 21–32–01–000–801 of the Bombardier CRJ Regional Jet Series Aircraft Maintenance Manual, CSP B–001, Part 2, Volume 1. | 28 | January 20, 2009. |
| Task 21–32–01–400–801, of the Bombardier CRJ Regional Jet Series Aircraft Maintenance Manual, CSP B–001, Part 2, Volume 1. | 28 | January 20, 2009. |

(3) For service information identified in this AD, contact Bombardier, Inc., 400 Côte-Vertu Road West, Dorval, Québec H4S 1Y9, Canada; telephone 514–855–5000; fax 514–855–7401; e-mail *thd.crj@aero.bombardier.com;* Internet *http://www.bombardier.com.*

(4) You may review copies of the service information at the FAA, Transport Airplane Directorate, 1601 Lind Avenue, SW., Renton, Washington. For information on the availability of this material at the FAA, call 425–227–1221.

(5) You may also review copies of the service information that is incorporated by reference at the National Archives and Records Administration (NARA). For information on the availability of this material at NARA, call 202–741–6030, or go to: *http://www.archives.gov/federal_register/code_of_federal_regulations/ibr_locations.html.*

Issued in Renton, Washington, on August 13, 2010.

**Ali Bahrami,**

*Manager, Transport Airplane Directorate, Aircraft Certification Service.*

[FR Doc. 2010–21415 Filed 9–1–10; 8:45 am]

BILLING CODE 4910–13–P

## DEPARTMENT OF TRANSPORTATION

## Federal Aviation Administration

## 14 CFR Part 39

**[Docket No. FAA–2010–0477; Directorate Identifier 2009–NM–226–AD; Amendment 39–16423; AD 2010–18–10]**

**RIN 2120–AA64**

## Airworthiness Directives; BAE Systems (Operations) Limited Model BAe 146 and Avro 146–RJ Airplanes

**AGENCY:** Federal Aviation Administration (FAA), Department of Transportation (DOT).

**ACTION:** Final rule.

**SUMMARY:** We are adopting a new airworthiness directive (AD) for the products listed above. This AD results from mandatory continuing airworthiness information (MCAI) originated by an aviation authority of another country to identify and correct an unsafe condition on an aviation product. The MCAI describes the unsafe condition as:

Three events have been reported where insulation material was found to be fouling pulleys in the aileron interconnect circuit in the cabin roof area. * * *

Interference between the cable and the insulation bag causes the material to be drawn into the gap between the pulley and the pulley guard. This condition, if not detected and corrected, could lead to restricted aileron movement and consequently, reduced control of the aeroplane.

* * * * *

We are issuing this AD to require actions to correct the unsafe condition on these products.

**DATES:** This AD becomes effective October 7, 2010.

The Director of the Federal Register approved the incorporation by reference of a certain publication listed in this AD as of October 7, 2010.

**ADDRESSES:** You may examine the AD docket on the Internet at *http://www.regulations.gov* or in person at the U.S. Department of Transportation, Docket Operations, M–30, West Building Ground Floor, Room W12–140, 1200 New Jersey Avenue, SE., Washington, DC.

**FOR FURTHER INFORMATION CONTACT:** Todd Thompson, Aerospace Engineer, International Branch, ANM–116, Transport Airplane Directorate, FAA, 1601 Lind Avenue, SW., Renton, Washington 98057–3356; telephone (425) 227–1175; fax (425) 227–1149.

**SUPPLEMENTARY INFORMATION:**

### Discussion

We issued a notice of proposed rulemaking (NPRM) to amend 14 CFR part 39 to include an AD that would apply to the specified products. That NPRM was published in the **Federal Register** on May 19, 2010 (75 FR 27959). That NPRM proposed to correct an unsafe condition for the specified products. The MCAI states:

Three events have been reported where insulation material was found to be fouling pulleys in the aileron interconnect circuit in the cabin roof area. The insulation material is contained in a bag, the material of which tends to become brittle with age. During the production life of the aeroplane type, several methods of bag retention were applied, all of which involved puncturing the bag. This puncture tends to result in a tear, which, if detected in time, can be repaired with tape; however, the affected cabin roof area is not frequently accessed for inspection. Over time, the weight of the bag also tends to cause tears in the material, making the insulation material sag, thereby causing interference with the cable and pulley.

Interference between the cable and the insulation bag causes the material to be drawn into the gap between the pulley and the pulley guard. This condition, if not detected and corrected, could lead to restricted aileron movement and consequently, reduced control of the aeroplane.

For the reasons described above, this [EASA] AD requires the installation of additional guards, bolts and nuts on the aileron interconnect cable pulleys at frame 29 (left and right).

This [EASA] AD has been revised to exclude aeroplanes from the Applicability that have been modified to freighter configuration in accordance with BAE Systems modification No. HCM50200B. As this modification includes the removal of the insulation bags, the unsafe condition that is addressed by this [EASA] AD cannot exist or develop on those aeroplanes.

You may obtain further information by examining the MCAI in the AD docket.

### Comments

We gave the public the opportunity to participate in developing this AD. We received no comments on the NPRM or on the determination of the cost to the public.

### Conclusion

We reviewed the available data and determined that air safety and the public interest require adopting the AD as proposed.

### Differences Between This AD and the MCAI or Service Information

We have reviewed the MCAI and related service information and, in general, agree with their substance. But we might have found it necessary to use different words from those in the MCAI to ensure the AD is clear for U.S. operators and is enforceable. In making these changes, we do not intend to differ substantively from the information provided in the MCAI and related service information.

We might also have required different actions in this AD from those in the

MCAI in order to follow our FAA policies. Any such differences are highlighted in a NOTE within the AD.

### Costs of Compliance

We estimate that this AD will affect 1 product of U.S. registry. We also estimate that it will take about 5 work-hours per product to comply with the basic requirements of this AD. The average labor rate is $85 per work-hour. Required parts will cost about $340 per product. Where the service information lists required parts costs that are covered under warranty, we have assumed that there will be no charge for these parts. As we do not control warranty coverage for affected parties, some parties may incur costs higher than estimated here. Based on these figures, we estimate the cost of this AD to the U.S. operator to be $765.

### Authority for This Rulemaking

Title 49 of the United States Code specifies the FAA's authority to issue rules on aviation safety. Subtitle I, section 106, describes the authority of the FAA Administrator. "Subtitle VII: Aviation Programs," describes in more detail the scope of the Agency's authority.

We are issuing this rulemaking under the authority described in "Subtitle VII, Part A, Subpart III, Section 44701: General requirements." Under that section, Congress charges the FAA with promoting safe flight of civil aircraft in air commerce by prescribing regulations for practices, methods, and procedures the Administrator finds necessary for safety in air commerce. This regulation is within the scope of that authority because it addresses an unsafe condition that is likely to exist or develop on products identified in this rulemaking action.

### Regulatory Findings

We determined that this AD will not have federalism implications under Executive Order 13132. This AD will not have a substantial direct effect on the States, on the relationship between the national government and the States, or on the distribution of power and responsibilities among the various levels of government.

*For the reasons discussed above, I certify this AD:*

1. Is not a "significant regulatory action" under Executive Order 12866;

2. Is not a "significant rule" under the DOT Regulatory Policies and Procedures (44 FR 11034, February 26, 1979); and

3. Will not have a significant economic impact, positive or negative, on a substantial number of small entities under the criteria of the Regulatory Flexibility Act.

We prepared a regulatory evaluation of the estimated costs to comply with this AD and placed it in the AD docket.

### Examining the AD Docket

You may examine the AD docket on the Internet at *http://www.regulations.gov;* or in person at the Docket Operations office between 9 a.m. and 5 p.m., Monday through Friday, except Federal holidays. The AD docket contains the NPRM, the regulatory evaluation, any comments received, and other information. The street address for the Docket Operations office (telephone (800) 647–5527) is in the **ADDRESSES** section. Comments will be available in the AD docket shortly after receipt.

### List of Subjects in 14 CFR Part 39

Air transportation, Aircraft, Aviation safety, Incorporation by reference, Safety.

### Adoption of the Amendment

■ Accordingly, under the authority delegated to me by the Administrator, the FAA amends 14 CFR part 39 as follows:

## PART 39—AIRWORTHINESS DIRECTIVES

■ 1. The authority citation for part 39 continues to read as follows:

**Authority:** 49 U.S.C. 106(g), 40113, 44701.

### § 39.13 [Amended]

■ 2. The FAA amends § 39.13 by adding the following new AD:

**2010–18–10 BAE Systems (Operations) Limited:** Amendment 39–16423. Docket No. FAA–2010–0477; Directorate Identifier 2009–NM–226–AD.

#### Effective Date

(a) This airworthiness directive (AD) becomes effective October 7, 2010.

#### Affected ADs

(b) None.

#### Applicability

(c) This AD applies to BAE Systems (OPERATIONS) LIMITED Model BAe 146–100A, –200A, and –300A series airplanes and Model Avro 146–RJ70A, 146–RJ85A, and 146–RJ100A airplanes, certificated in any category; all serial numbers, except those airplanes modified to freighter configuration in accordance with BAE SYSTEMS Modification HCM50200B.

#### Subject

(d) Air Transport Association (ATA) of America Code 27: Flight Controls.

#### Reason

(e) The mandatory continuing airworthiness information (MCAI) states:

Three events have been reported where insulation material was found to be fouling pulleys in the aileron interconnect circuit in the cabin roof area. * * *

Interference between the cable and the insulation bag causes the material to be drawn into the gap between the pulley and the pulley guard. This condition, if not detected and corrected, could lead to restricted aileron movement and consequently, reduced control of the aeroplane.

* * * * *

#### Compliance

(f) You are responsible for having the actions required by this AD performed within the compliance times specified, unless the actions have already been done.

#### Actions

(g) Within 6 months after the effective date of this AD, install new aileron interconnect cable pulley guards, in accordance with paragraph 2.C. "Modification" of the Accomplishment Instructions of BAE Systems (OPERATIONS) LIMITED Modification Service Bulletin SB.27–183–36246A, dated December 9, 2008.

#### FAA AD Differences

**Note 1:** This AD differs from the MCAI and/or service information as follows: No differences.

#### Other FAA AD Provisions

(h) The following provisions also apply to this AD:

(1) *Alternative Methods of Compliance (AMOCs):* The Manager, International Branch, ANM–116, Transport Airplane Directorate, FAA, has the authority to approve AMOCs for this AD, if requested using the procedures found in 14 CFR 39.19. Send information to *Attn:* Todd Thompson, Aerospace Engineer, International Branch, ANM–116, Transport Airplane Directorate, FAA, 1601 Lind Avenue, SW., Renton, Washington 98057–3356; telephone (425) 227–1175; fax (425) 227–1149. Before using any approved AMOC on any airplane to which the AMOC applies, notify your principal maintenance inspector (PMI) or principal avionics inspector (PAI), as appropriate, or lacking a principal inspector, your local Flight Standards District Office. The AMOC approval letter must specifically reference this AD.

(2) *Airworthy Product:* For any requirement in this AD to obtain corrective actions from a manufacturer or other source, use these actions if they are FAA-approved. Corrective actions are considered FAA-approved if they are approved by the State of Design Authority (or their delegated agent). You are required to assure the product is airworthy before it is returned to service.

(3) *Reporting Requirements:* For any reporting requirement in this AD, under the provisions of the Paperwork Reduction Act (44 U.S.C. 3501 *et seq.*), the Office of Management and Budget (OMB) has approved the information collection requirements and has assigned OMB Control Number 2120–0056.

**Related Information**

(i) Refer to MCAI European Aviation Safety Agency Airworthiness Directive 2009–0205, Revision 1, dated January 12, 2010; and BAE Systems (OPERATIONS) LIMITED Modification Service Bulletin SB.27–183–36246A, dated December 9, 2008; for related information.

**Material Incorporated by Reference**

(j) You must use BAE Systems (OPERATIONS) LIMITED Modification Service Bulletin SB.27–183–36246A, dated December 9, 2008, to do the actions required by this AD, unless the AD specifies otherwise.

(1) The Director of the Federal Register approved the incorporation by reference of this service information under 5 U.S.C. 552(a) and 1 CFR part 51.

(2) For service information identified in this AD, contact BAE Systems (Operations) Limited, Customer Information Department, Prestwick International Airport, Ayrshire, KA9 2RW, Scotland, United Kingdom; telephone +44 1292 675207; fax +44 1292 675704; e-mail *RApublications@baesystems.com;* Internet *http://www.baesystems.com/Businesses/RegionalAircraft/index.htm.*

(3) You may review copies of the service information at the FAA, Transport Airplane Directorate, 1601 Lind Avenue, SW., Renton, Washington. For information on the availability of this material at the FAA, call 425–227–1221.

(4) You may also review copies of the service information that is incorporated by reference at the National Archives and Records Administration (NARA). For information on the availability of this material at NARA, call 202–741–6030, or go to: *http://www.archives.gov/federal_register/code_of_federal_regulations/ibr_locations.html.*

Issued in Renton, Washington, on August 20, 2010.

**Jeffrey E. Duven,**

*Acting Manager, Transport Airplane Directorate, Aircraft Certification Service.*

[FR Doc. 2010–21411 Filed 9–1–10; 8:45 am]

BILLING CODE 4910–13–P

## DEPARTMENT OF TRANSPORTATION

## Federal Aviation Administration

## 14 CFR Part 39

**[Docket No. FAA–2010–0825; Directorate Identifier 2010–SW–072–AD; Amendment 39–16410; AD 2010–16–51]**

**RIN 2120–AA64**

## Airworthiness Directives; Eurocopter France Model SA330J Helicopters

**AGENCY:** Federal Aviation Administration, DOT.

**ACTION:** Final rule; request for comments.

**SUMMARY:** This document publishes in the **Federal Register** an amendment adopting Airworthiness Directive (AD) 2010–16–51, which was sent previously to all known U.S. owners and operators of Eurocopter France (Eurocopter) Model SA330J helicopters by individual letters. This AD requires, within 10 hours time-in-service (TIS), inspecting for a gap between the main gearbox (MGB) oil cooling fan assembly (fan) rotor blade and the upper section of the guide vane bearing housing. This inspection must be accomplished by using a feeler gauge attached to a rigid rod. If the feeler gauge cannot be inserted between the blade and the housing, this AD requires replacing the two fan rotor shaft bearings with two airworthy bearings. This AD is prompted by the separation of a fan rotor blade that caused puncture holes in the transmission deck. This condition, if not corrected, could lead to damage to the hydraulic lines and flight controls, and subsequent loss of control of the helicopter.

**DATES:** Effective September 17, 2010, to all persons except those persons to whom it was made immediately effective by Emergency AD 2010–16–51, issued on July 19, 2010, which contained the requirements of this amendment.

The incorporation by reference of certain publications listed in the regulations is approved by the Director of the Federal Register as of September 17, 2010.

Comments for inclusion in the Rules Docket must be received on or before November 1, 2010.

**ADDRESSES:** Use one of the following addresses to submit comments on this AD:

- *Federal eRulemaking Portal:* Go to *http://www.regulations.gov.* Follow the instructions for submitting comments.
- *Fax:* 202–493–2251.
- *Mail:* U.S. Department of Transportation, Docket Operations, M–30, West Building Ground Floor, Room W12–140, 1200 New Jersey Avenue, SE., Washington, DC 20590.
- *Hand Delivery:* U.S. Department of Transportation, Docket Operations, M–30, West Building Ground Floor, Room W12–140, 1200 New Jersey Avenue, SE., Washington, DC 20590, between 9 a.m. and 5 p.m., Monday through Friday, except Federal holidays.

You may get the service information identified in this AD from American Eurocopter Corporation, 2701 Forum Drive, Grand Prairie, TX 75053–4005, telephone (800) 232–0323, fax (972) 641–3710, or at *http://www.eurocopter.com.*

*Examining the docket:* You may examine the docket that contains the AD, any comments, and other information on the Internet at *http://www.regulations.gov,* or in person at the Docket Operations office between 9 a.m. and 5 p.m., Monday through Friday, except Federal holidays. The Docket Operations office (telephone (800) 647–5527) is located in Room W12–140 on the ground floor of the West Building at the street address stated in the **ADDRESSES** section. Comments will be available in the AD docket shortly after receipt.

**FOR FURTHER INFORMATION CONTACT:** Rao Edupuganti, Aviation Safety Engineer, Rotorcraft Directorate, Regulations and Policy Group, 2601 Meacham Blvd., Fort Worth, Texas 76137, telephone (817) 222–4389, fax (817) 222–5961.

**SUPPLEMENTARY INFORMATION:** On July 19, 2010, we issued Emergency AD 2010–16–51 for Eurocopter Model SA330J helicopters, which requires, within 10 hours TIS, inspecting for a gap between the MGB fan rotor blade and the upper section of the guide vane bearing housing over the entire width of the blade. The inspection must be accomplished by using a 0.2 millimeter (mm) (0.008 inch) feeler gauge attached to a rigid rod. If the feeler gauge cannot be inserted between the upper blade and the upper housing, the Emergency AD requires replacing the two fan rotor shaft bearings with two airworthy bearings. That action was prompted by a rotor burst of MGB oil fan. Investigation of the incident has shown that some fan rotor blades struck the upper area of the guide vane bearing housing of the fan and separated from the rotor, striking the MGB compartment environment, and punctured holes in the transmission deck. This interference was due to internal degradation of the bearings of the fan rotor shaft. This condition, if not corrected, could lead to fan rotor burst, damage to the hydraulic lines and flight controls, and subsequent loss of control of the helicopter.

The European Aviation Safety Agency (EASA), which is the Technical Agent for the Member States of the European Community, notified us that an unsafe condition may exist on these helicopter models. EASA advises of a case of rotor burst of a fan. Investigation has shown that some fan rotor blades interfered with the upper area of the guide vane bearing housing of the fan. The blades detached from the rotor, impacted the MGB compartment environment, and punctured holes in the transmission deck. This interference was due to internal degradation of the bearings of

the fan rotor shaft. EASA states that this condition, if not corrected could lead to fan rotor burst and possibly result in damage to hydraulic pipes and flight controls located nearby the MGB cooling fan.

Eurocopter has issued Emergency Alert Service Bulletin No. 05.96, dated July 12, 2010 (EASB), for Model SA330J helicopters and for non-FAA type-certificated Model SA330Ba, Ca, Ea, L, Jm, S1, and Sm military helicopters. The EASB specifies checking for a minimum play of 0.2 millimeters (mm) between a fan blade and the guide vane bearing housing using a locally manufactured tool. The EASB also states that if the minimum play is not complied with, replace the two bearings of the fan rotor shaft. EASA classified the EASB as mandatory and issued AD No. 2010–0147–E, dated July 14, 2010, to ensure the continued airworthiness of these helicopters. This AD differs from EASA Emergency AD No. 2010–0142–E in that we use the term "hours time-in-service" rather than "flight hours." Also, for clarification, we specify inspecting for a "gap" rather than checking for "play."

This helicopter model is manufactured in France and is type certificated for operation in the United States under the provisions of 14 CFR 21.29 and the applicable bilateral agreement. Pursuant to the applicable bilateral agreement, EASA has kept us informed of the situation described above. We have examined the findings of EASA, reviewed all available information, and determined that AD action is necessary for helicopters of this type design that are certificated for operation in the United States.

Since the unsafe condition described is likely to exist or develop on other Eurocopter Model SA330J helicopters of the same type design, we issued Emergency AD 2010–16–51 to prevent a rotor burst of the MGB fan, damage to the hydraulic lines and flight controls, and subsequent loss of control of the helicopter. The Emergency AD requires, within 10 hours TIS, using a 0.2 mm (0.008 inch) feeler gauge attached to a rigid rod, inspecting for a gap between a fan rotor blade and the upper section of the guide vane bearing housing over the entire width of the blade. If the feeler gauge can be inserted between the blade and the housing (a gap greater than or equal to 0.2 mm), no further action is required. If the feeler gauge cannot be inserted between the blade and the housing (a gap less than 0.2 mm), replacing the two fan rotor shaft bearings with two airworthy bearings is required. After installing airworthy bearings, reinspecting the gap to ensure there is sufficient clearance between the blade and the housing is also required. The actions must be accomplished by following specified portions of the EASB described previously.

The short compliance time involved is required because the previously described critical unsafe condition can adversely affect the structural integrity and controllability of the helicopter. Therefore, the actions previously described are required within a very short time period, and this AD must be issued immediately.

Since it was found that immediate corrective action was required, notice and opportunity for prior public comment thereon were impracticable and contrary to the public interest, and good cause existed to make the AD effective immediately by individual letters issued on July 19, 2010 to all known U.S. owners and operators of Eurocopter Model SA330J helicopters. These conditions still exist, and the AD is hereby published in the **Federal Register** as an amendment to 14 CFR 39.13 to make it effective to all persons.

We estimate that this AD will affect 12 helicopters of U.S. registry. Each inspection will take approximately 2 work hours. Replacing both bearings on each helicopter will take approximately 6 work hours. The average labor rate is $85 per work hour. Required parts will cost approximately $935 per helicopter (2 bearings per helicopter). Based on these figures, we estimate the total cost impact of the AD on U.S. operators to be $19,380 ($1,615 per helicopter, assuming 1 inspection and replacement of both bearings on each helicopter).

## Comments Invited

This AD is a final rule that involves requirements that affect flight safety and was not preceded by notice and an opportunity for public comment; however, we invite you to submit any written data, views, or arguments regarding this AD. Send your comments to an address listed under **ADDRESSES**. Include "Docket No. FAA–2010–0825; Directorate Identifier 2010–SW–072–AD" at the beginning of your comments. We specifically invite comments on the overall regulatory, economic, environmental, and energy aspects of the AD. We will consider all comments received by the closing date and may amend the AD in light of those comments.

We will post all comments we receive, without change, to *http://www.regulations.gov*, including any personal information you provide. We will also post a report summarizing each substantive verbal contact with FAA personnel concerning this AD. Using the search function of our docket Web site, you can find and read the comments to any of our dockets, including the name of the individual who sent the comment. You may review the DOT's complete Privacy Act Statement in the **Federal Register** published on April 11, 2000 (65 FR 19477–78).

## Regulatory Findings

We have determined that this AD will not have federalism implications under Executive Order 13132. This AD will not have a substantial direct effect on the States, on the relationship between the national government and the States, or on the distribution of power and responsibilities among the various levels of government.

For the reasons discussed above, I certify that the regulation:

1. Is not a "significant regulatory action" under Executive Order 12866;
2. Is not a "significant rule" under the DOT Regulatory Policies and Procedures (44 FR 11034, February 26, 1979); and
3. Will not have a significant economic impact, positive or negative, on a substantial number of small entities under the criteria of the Regulatory Flexibility Act.

We prepared an economic evaluation of the estimated costs to comply with this AD. See the AD docket to examine the economic evaluation.

## Authority for This Rulemaking

Title 49 of the United States Code specifies the FAA's authority to issue rules on aviation safety. Subtitle I, Section 106, describes the authority of the FAA Administrator. Subtitle VII, Aviation Programs, describes in more detail the scope of the Agency's authority.

We are issuing this rulemaking under the authority described in Subtitle VII, Part A, Subpart III, Section 44701, "General requirements." Under that section, Congress charges the FAA with promoting safe flight of civil aircraft in air commerce by prescribing regulations for practices, methods, and procedures the Administrator finds necessary for safety in air commerce. This regulation is within the scope of that authority because it addresses an unsafe condition that is likely to exist or develop on products identified in this rulemaking action.

## List of Subjects in 14 CFR Part 39

Air transportation, Aircraft, Aviation safety, Incorporation by reference, Safety.

## Adoption of the Amendment

■ Accordingly, pursuant to the authority delegated to me by the Administrator, the Federal Aviation Administration

amends part 39 of the Federal Aviation Regulations (14 CFR part 39) as follows:

## PART 39—AIRWORTHINESS DIRECTIVES

■ 1. The authority citation for part 39 continues to read as follows:

**Authority:** 49 U.S.C. 106(g), 40113, 44701.

### § 39.13 [Amended]

■ 2. Section 39.13 is amended by adding a new airworthiness directive to read as follows:

**2010–16–51 EUROCOPTER FRANCE:** Amendment 39–16410. Docket No. FAA–2010–0825; Directorate Identifier 2010–SW–072–AD.

*Applicability:* Model SA330J helicopters, certificated in any category.

*Compliance:* Required as indicated.

To prevent rotor burst of the main gearbox (MGB) oil cooling fan assembly (fan), damage to the hydraulic lines and flight controls, and subsequent loss of control of the helicopter, do the following:

(a) Within 10 hours time-in-service (TIS), unless accomplished previously, and thereafter at intervals not to exceed 10 hours TIS, using a 0.2 millimeter (mm) (0.008 inch) feeler gauge attached to a rigid rod, inspect for a minimum gap of 0.2 mm between a fan rotor blade and the upper section of the guide vane bearing housing over the entire width of the blade as depicted in Figure 1 and as shown in Figure 2 of Eurocopter Emergency Alert Service Bulletin No. 05.96, dated July 12, 2010 (EASB), and by following the Accomplishment Instructions, paragraph 3.B., of the EASB.

(1) If the feeler gauge can be inserted between the blade and the housing (a gap greater than or equal to 0.2 mm), no further action is required.

(2) If the feeler gauge cannot be inserted between the blade and the housing (a gap less than 0.2 mm), before further flight, replace the two fan rotor shaft bearings, with two airworthy bearings, part number 704A33651114. Reinspect to ensure compliance with paragraph (a) of this AD after installing airworthy bearings. Replacing the two fan rotor shaft bearings does not constitute terminating action for the inspection requirements of this AD.

(b) To request a different method of compliance or a different compliance time for this AD, follow the procedures in 14 CFR 39.19. Contact the Manager, Safety Management Group, FAA, ATTN: Rao Edupuganti, Aviation Safety Engineer, Rotorcraft Directorate, Regulations and Policy Group, 2601 Meacham Blvd., Fort Worth, Texas 76137, telephone (817) 222–4389, fax (817) 222–5961, for information about previously approved alternative methods of compliance.

(c) The Joint Aircraft System/Component (JASC) Code is 6322: Main gearbox oil cooler fan.

(d) The inspections shall be done in accordance with the specified portions of Eurocopter Emergency Alert Service Bulletin No. 05.96, dated July 12, 2010. The Director of the Federal Register approved this incorporation by reference in accordance with 5 U.S.C. 552(a) and 1 CFR part 51. Copies may be obtained from American Eurocopter Corporation, 2701 Forum Drive, Grand Prairie, TX 75053–4005, telephone (800) 232–0323, fax (972) 641–3710, or at *http://www.eurocopter.com*. Copies may be inspected at the FAA, Office of the Regional Counsel, Southwest Region, 2601 Meacham Blvd., Room 663, Fort Worth, Texas, or at the National Archives and Records Administration (NARA). For information on the availability of this material at NARA, call 202–741–6030, or go to: *http://www.archives.gov/federal_register/code_of_federal_regulations/ibr_locations.html.*

(e) This amendment becomes effective on September 17, 2010, to all persons except those persons to whom it was made immediately effective by Emergency AD 2010–16–51, issued July 19, 2010, which contained the requirements of this amendment.

Issued in Fort Worth, Texas, on August 5, 2010.

**Scott A. Horn,**

*Acting Manager, Rotorcraft Directorate, Aircraft Certification Service.*

[FR Doc. 2010–21578 Filed 9–1–10; 8:45 am]

BILLING CODE 4910–13–P

---

## DEPARTMENT OF TRANSPORTATION

### Federal Aviation Administration

### 14 CFR Part 39

**[Docket No. FAA–2010–0824; Directorate Identifier 2010–SW–045–AD; Amendment 39–16409; AD 2010–12–51]**

**RIN 2120–AA64**

## Airworthiness Directives; Agusta S.p.A. (Agusta) Model A119 and AW119 MKII Helicopters

**AGENCY:** Federal Aviation Administration, DOT.

**ACTION:** Final rule; request for comments.

**SUMMARY:** This document publishes in the **Federal Register** an amendment adopting Emergency Airworthiness Directive (AD) 2010–12–51, which was sent previously to all known U.S. owners and operators of the specified Agusta model helicopters by individual letters. This AD requires, before further flight, removing the forward boot from the hub-locking nut (nut) and inserting a gauge between the tail rotor control rod (rod) and nut until the gauge stops. This AD then requires, depending on the depth measurement from the face of the nut, either reidentifying the tail rotor gearbox (TGB) with a new part number (P/N) or replacing the TGB and the associated parts with airworthy parts. This AD is prompted by a report of a missing rod bushing (bushing) from a 90-degree TGB installed on a Model AW119 MKII helicopter. The Agusta Model A119 helicopters also have the affected TGB installed; therefore, they are also included in the applicability of this AD. The actions specified by this AD are intended to detect a missing bushing in the TGB and to prevent abnormal vibration, damage to the tail rotor system, loss of the yaw control function, and subsequent loss of control of the helicopter.

**DATES:** Effective September 17, 2010, to all persons except those persons to whom it was made immediately effective by Emergency AD 2010–12–51, issued on June 1, 2010, which contained the requirements of this amendment.

The incorporation by reference of certain publications listed in the regulations is approved by the Director of the Federal Register as of September 17, 2010.

Comments for inclusion in the Rules Docket must be received on or before November 1, 2010.

**ADDRESSES:** Use one of the following addresses to submit comments on this AD:

- *Federal eRulemaking Portal:* Go to *http://www.regulations.gov*. Follow the instructions for submitting comments.
- *Fax:* 202–493–2251.
- *Mail:* U.S. Department of Transportation, Docket Operations, M–30, West Building Ground Floor, Room W12–140, 1200 New Jersey Avenue, SE., Washington, DC 20590.
- *Hand Delivery:* U.S. Department of Transportation, Docket Operations, M–30, West Building Ground Floor, Room W12–140, 1200 New Jersey Avenue, SE., Washington, DC 20590, between 9 a.m. and 5 p.m., Monday through Friday, except Federal holidays.

You may get the service information identified in this AD from Agusta, Via Giovanni Agusta, 520 21017 Cascina Costa di Samarate (VA), Italy, telephone 39 0331–229111, fax 39 0331–229605/222595, or at *http://customersupport.agusta.com/technical_advice.php.*

*Examining the docket:* You may examine the docket that contains the AD, any comments, and other information on the Internet at *http://www.regulations.gov*, or in person at the Docket Operations office between 9 a.m. and 5 p.m., Monday through Friday, except Federal holidays. The Docket Operations office (telephone (800) 647–5527) is located in Room W12–140 on the ground floor of the West Building at the street address stated in the **ADDRESSES** section. Comments will be available in the AD docket shortly after receipt.

**FOR FURTHER INFORMATION CONTACT:** Eric Haight, Aviation Safety Engineer, FAA, Rotorcraft Directorate, Regulations and Policy Group, 2601 Meacham Blvd., Fort Worth, Texas 76137, telephone (817) 222–5204, fax (817) 222–5961.

**SUPPLEMENTARY INFORMATION:** On June 1, 2010, the FAA issued Emergency AD 2010–12–51 for the specified model helicopters, which requires, before further flight, removing the forward boot from the nut and inserting a gauge between the rod and nut until the gauge stops. The AD then requires, depending on the depth measurement from the face of the nut, either reidentifying the TGB with a new P/N or replacing the TGB and the associated parts with airworthy parts. The AD was prompted by a report of a missing bushing from a 90-degree TGB installed on a Model AW119 MKII helicopter. The Agusta Model A119 helicopters also have the affected TGB installed; therefore, they are also included in the applicability of the AD. This condition, if not corrected, could result in abnormal vibration and damage to the tail rotor system, loss of the yaw control function, and subsequent loss of control of the helicopter.

Agusta has issued Alert Bollettino Tecnico No. 119–38, dated March 25, 2010 (ABT), which specifies inspecting the TGB, P/N 109–0440–06–103, to verify the presence of the bushing. If the bushing is not installed, the ABT specifies replacing the TGB and associated parts with a "new" TGB assembly, P/N 109–0440–06–105. Also, the ABT specifies if the bushing is installed, reidentifying the TGB "by installing an additional nameplate" with P/N 109–0440–06–105.

The European Aviation Safety Agency (EASA), the Technical Agent for the Member States of the European Community, notified the FAA that an unsafe condition may exist on these helicopter models. EASA advises of a missing bushing in the TGB of a Model AW119 MKII helicopter. EASA also advises that "this condition, if not detected and corrected, could cause abnormal vibration of the tail rotor controls possibly leading to their damage and consequent loss of the yaw control function." EASA classified the Agusta ABT as mandatory and issued Emergency AD No. 2010–0059–E, dated March 26, 2010, to ensure the continued airworthiness of these helicopters.

This AD differs from the EASA Emergency AD in that we refer to flight hours as hours time-in-service (TIS). We also do not refer to a compliance date of June 30, 2010. We added the requirement of the thickness gauge being no wider than 10 mm. We added the determinate that if the depth between the rod and the nut is between 4 mm and 6 mm, the bushing is installed. We do not require an additional nameplate but require reidentifying the TGB P/N with an etch pen by changing the last three digits of the P/N from –103 to –105.

These helicopter models are manufactured in Italy and are type certificated for operation in the United States under the provisions of 14 CFR 21.29 and the applicable bilateral agreement. Pursuant to the applicable bilateral agreement, EASA has kept the FAA informed of the situation described above. The FAA has examined the findings of EASA, reviewed all available information, and determined that AD action is necessary for products of these type designs that are certificated for operation in the United States.

Since the unsafe condition described is likely to exist or develop on other Agusta model helicopters of these same type designs, the FAA issued Emergency AD 2010–12–51 to detect a missing bushing in the TGB and to prevent abnormal vibration and damage to the tail rotor system, loss of the yaw control function, and subsequent loss of control of the helicopter. The AD requires, before further flight, removing the forward boot from the nut and inserting a 0.3 mm thickness gauge, not exceeding 10 mm in width, between the rod and nut until the gauge stops. The AD requires, from the face of the nut, measuring the depth the gauge is inserted between the rod and the nut before it stops. If the depth measurement is between 4 mm and 6 mm, the bushing is installed, and the AD requires reidentifying the TGB, P/N 109–0440–06–103, by using an etch pen to change the last three digits of the P/N from –103 to –105. If the depth measurement is greater than 6 mm, the AD requires, before further flight, replacing the TGB and the associated parts with airworthy parts. The actions must be accomplished in accordance with specified portions of the ABT described previously.

The short compliance time involved is required because the previously described critical unsafe condition can adversely affect the controllability and structural integrity of the helicopter. Therefore, measuring the depth between the rod and the nut of the TGB, and if the depth measurement is greater than 6 mm, replacing the TGB and associated parts with airworthy parts are required before further flight, and this AD must be issued immediately.

Since it was found that immediate corrective action was required, notice and opportunity for prior public comment thereon were impracticable and contrary to the public interest, and good cause existed to make the AD effective immediately by individual letters issued on June 1, 2010, to all known U.S. owners and operators of the specified Agusta model helicopters. These conditions still exist, and the AD is hereby published in the **Federal Register** as an amendment to 14 CFR 39.13 to make it effective to all persons.

The FAA estimates that this AD will affect 69 helicopters of U.S. registry. It will take 1.5 work hours per helicopter to conduct the depth inspection and reidentify the TGB, and about 10 work hours per helicopter to replace a TGB and associated parts. The average labor rate is $85 per work hour. Required parts will cost about $128,275 per helicopter. Based on these figures, we estimate the total cost impact of the AD on U.S. operators to be $911,780, assuming the TGB and associated parts are replaced on 7 helicopters.

## Comments Invited

This AD is a final rule that involves requirements that affect flight safety and was not preceded by notice and an opportunity for public comment; however, we invite you to submit any written data, views, or arguments regarding this AD. Send your comments to an address listed under **ADDRESSES**. Include "Docket No. FAA–2010–0824; Directorate Identifier 2010–SW–045–AD" at the beginning of your comments. We specifically invite comments on the overall regulatory, economic, environmental, and energy aspects of the AD. We will consider all comments received by the closing date and may amend the AD in light of those comments.

We will post all comments we receive, without change, to *http://www.regulations.gov,* including any personal information you provide. We will also post a report summarizing each substantive verbal contact with FAA personnel concerning this AD. Using the search function of our docket Web site, you can find and read the comments to any of our dockets, including the name of the individual who sent the comment. You may review the DOT's complete Privacy Act Statement in the **Federal Register** published on April 11, 2000 (65 FR 19477–78).

## Regulatory Findings

We have determined that this AD will not have federalism implications under Executive Order 13132. This AD will not have a substantial direct effect on the States, on the relationship between the national government and the States, or on the distribution of power and

responsibilities among the various levels of government.

For the reasons discussed above, I certify that the regulation:

1. Is not a "significant regulatory action" under Executive Order 12866;

2. Is not a "significant rule" under the DOT Regulatory Policies and Procedures (44 FR 11034, February 26, 1979); and

3. Will not have a significant economic impact, positive or negative, on a substantial number of small entities under the criteria of the Regulatory Flexibility Act.

We prepared an economic evaluation of the estimated costs to comply with this AD. See the AD docket to examine the economic evaluation.

### Authority for This Rulemaking

Title 49 of the United States Code specifies the FAA's authority to issue rules on aviation safety. Subtitle I, Section 106, describes the authority of the FAA Administrator. Subtitle VII, Aviation Programs, describes in more detail the scope of the Agency's authority.

We are issuing this rulemaking under the authority described in Subtitle VII, Part A, Subpart III, Section 44701, "General requirements." Under that section, Congress charges the FAA with promoting safe flight of civil aircraft in air commerce by prescribing regulations for practices, methods, and procedures the Administrator finds necessary for safety in air commerce. This regulation is within the scope of that authority because it addresses an unsafe condition that is likely to exist or develop on products identified in this rulemaking action.

### List of Subjects in 14 CFR Part 39

Air transportation, Aircraft, Aviation safety, Incorporation by reference, Safety.

### Adoption of the Amendment

■ Accordingly, pursuant to the authority delegated to me by the Administrator, the Federal Aviation Administration amends part 39 of the Federal Aviation Regulations (14 CFR part 39) as follows:

## PART 39—AIRWORTHINESS DIRECTIVES

■ 1. The authority citation for part 39 continues to read as follows:

**Authority:** 49 U.S.C. 106(g), 40113, 44701.

### § 39.13 [Amended]

■ 2. Section 39.13 is amended by adding a new airworthiness directive to read as follows:

**2010–12–51 AGUSTA S.p.A.:** Amendment 39–16409. Docket No. FAA–2010–0824; Directorate Identifier 2010–SW–045–AD.

*Applicability:* Model A119 and AW119 MKII helicopters, with a 90-degree tail rotor gearbox (TGB), part number (P/N) 109–0440–06–103, installed, certificated in any category.

*Compliance:* Required as indicated, unless accomplished previously.

To prevent abnormal vibration and damage to the tail rotor system, loss of the yaw control function, and subsequent loss of control of the helicopter, do the following:

(a) Before further flight, remove the forward boot, P/N 109–0135–10, from the hub-locking nut (nut), P/N 109–0135–12, as shown in Figure 1 of Agusta Alert Bollettino Tecnico No. 119–38, dated March 25, 2010 (ABT).

(1) Insert a 0.3 millimeter (mm) thickness gauge, not exceeding 10 mm in width, between the tail rotor control rod (rod) and the nut as shown in Figure 2 of the ABT until the gauge stops.

(2) From the face of the nut, measure the depth the gauge is inserted between the rod and the nut before it stops:

(i) If the depth measurement is between 4 mm and 6 mm, the bushing, P/N 109–0135–14–101, is installed. Within 5 hours time-in service, reidentify the TGB, P/N 109–0440–06–103, by using an etch pen to change the last three digits of the P/N from –103 to –105.

**Note 1:** Installing a new nameplate by following the Compliance Instructions, Part II, of the ABT satisfies the reidentification requirements of the TGB P/N in paragraph (a)(2)(i) of this AD.

(ii) If the depth measurement is greater than 6 mm, before further flight, replace the TGB, P/N 109–0440–06–103, with TGB, P/N 109–0440–06–105, and replace the associated parts listed in the Accomplishment Instructions, Part I, paragraph 4, of the ABT with the associated parts listed in the Accomplishment Instructions, Part I, paragraph 5, of the ABT.

(b) To request a different method of compliance or a different compliance time for this AD, follow the procedures in 14 CFR 39.19. Contact the Manager, Safety Management Group, FAA, ATTN: Eric Haight, Aviation Safety Engineer, FAA, Rotorcraft Directorate, Regulations and Guidance Group, 2601 Meacham Blvd., Fort Worth, Texas 76137, telephone (817) 222–5204, fax (817) 222–5961, for information about previously approved alternative methods of compliance.

(c) The Joint Aircraft System/Component (JASC) Code is 6520: Tail Rotor Gearbox.

(d) Replacing the associated parts and removing the boot, and measuring the insertion depth of the gauge shall be done by following the specified portions of Agusta Alert Bollettino Tecnico No. 119–38, dated March 25, 2010. The Director of the Federal Register approved this incorporation by reference in accordance with 5 U.S.C. 552(a) and 1 CFR part 51. Copies may be obtained from Agusta, Via Giovanni Agusta, 520 21017 Cascina Costa di Samarate (VA), Italy, telephone 39 0331–229111, fax 39 0331–229605/222595, or at *http://customersupport.agusta.com/technical_advice.php.* Copies may be inspected at the FAA, Office of the Regional Counsel, Southwest Region, 2601 Meacham Blvd., Room 663, Fort Worth, Texas, or at the National Archives and Records Administration (NARA). For information on the availability of this material at NARA, call 202–741–6030, or go to: *http://www.archives.gov/federal_register/code_of_federal_regulations/ibr_locations.html.*

(e) This amendment becomes effective on September 17, 2010, to all persons except those persons to whom it was made immediately effective by Emergency AD 2010–12–51, issued June 1, 2010, which contained the requirements of this amendment.

**Note 2:** The subject of this AD is addressed in the European Aviation Safety Agency Emergency AD No. 2010–0059–E, dated March 26, 2010.

Issued in Fort Worth, Texas, on August 12, 2010.

**Mark R. Schilling,**

*Acting Manager, Rotorcraft Directorate, Aircraft Certification Service.*

[FR Doc. 2010–21593 Filed 9–1–10; 8:45 am]

BILLING CODE 4910–13–P

---

## DEPARTMENT OF TRANSPORTATION

## Federal Aviation Administration

## 14 CFR Part 39

**[Docket No. FAA–2010–0632; Directorate Identifier 2010–CE–025–AD; Amendment 39–16426; AD 2010–18–01]**

**RIN 2120–AA64**

## Airworthiness Directives; Robert E. Rust, Jr. Model DeHavilland DH.C1 Chipmunk 21, DH.C1 Chipmunk 22, and DH.C1 Chipmunk 22A Airplanes

**AGENCY:** Federal Aviation Administration (FAA), Department of Transportation (DOT).

**ACTION:** Final rule.

**SUMMARY:** We are adopting a new airworthiness directive (AD) for all Robert E. Rust, Jr. Models DeHavilland DH.C1 Chipmunk 21, DH.C1 Chipmunk 22, and DH.C1 Chipmunk 22A airplanes. This AD requires you to do a one-time inspection of the flap operating system for an unapproved latch plate design installation, with replacement as necessary. This AD results from a report of a latch plate failing in service that was not made in accordance with the applicable de Havilland drawing. We are issuing this AD to detect and correct an unauthorized latch plate design installation which could result in an un-commanded retraction of the flaps. This failure could lead to a stall during a landing approach.

**DATES:** This AD becomes effective on October 7, 2010.

On October 7, 2010, the Director of the Federal Register approved the incorporation by reference of certain publications listed in this AD.

**ADDRESSES:** For service information identified in this AD, contact de Havilland Support Limited, Duxford Airfield, Cambridgeshire, CB22 4QR, England, phone: +44 (0) 1223 830090; fax: +44 (0) 1223 830085; e-mail: *info@dhsupport.com;* Internet: *http://www.dhsupport.com/*.

To view the AD docket, go to U.S. Department of Transportation, Docket Operations, M–30, West Building Ground Floor, Room W12–140, 1200 New Jersey Avenue, SE., Washington, DC 20590, or on the Internet at *http://www.regulations.gov.* The docket number is FAA–2010–0632; Directorate Identifier 2010–CE–025–AD.

**FOR FURTHER INFORMATION CONTACT:** Carey O'Kelley, Aerospace Engineer, FAA, Atlanta Aircraft Certification Office (ACO), 1701 Columbia Avenue, College Park, Georgia 30337; telephone: (404) 474–5543; fax: (404) 474–5606.

**SUPPLEMENTARY INFORMATION:**

## Discussion

On June 14, 2010, we issued a proposal to amend part 39 of the Federal Aviation Regulations (14 CFR part 39) to include an AD that would apply to all Robert E. Rust, Jr. Models DeHavilland DH.C1 Chipmunk 21, DH.C1 Chipmunk 22, and DH.C1 Chipmunk 22A airplanes. This proposal was published in the **Federal Register** as a notice of proposed rulemaking (NPRM) on June 21, 2010 (75 FR 34956). The NPRM proposed to require a one-time inspection of the flap operating system for an unapproved latch plate design installation with replacement as necessary.

## Comments

We provided the public the opportunity to participate in developing this AD. We received no comments on the proposal or on the determination of the cost to the public.

## Conclusion

We have carefully reviewed the available data and determined that air safety and the public interest require adopting the AD as proposed except for minor editorial corrections. We have determined that these minor corrections:

- Are consistent with the intent that was proposed in the NPRM for correcting the unsafe condition; and
- Do not add any additional burden upon the public than was already proposed in the NPRM.

## Costs of Compliance

We estimate that this AD affects 64 airplanes in the U.S. registry.

We estimate the following costs to do the inspection:

| Labor cost | Parts cost | Total cost per airplane | Total cost on U.S. operators |
|---|---|---|---|
| 3 work-hours × $85 per hour = $255 | Not Applicable | $255 | $16,320 |

We estimate the following costs to do any necessary replacements that would be required based on the results of the inspection. We have no way of determining the number of airplanes that may need this replacement:

| Labor cost | Parts cost | Total cost per airplane |
|---|---|---|
| .5 work-hour × $85 per hour = $42.50 | $175 | $217.50 |

## Authority for This Rulemaking

Title 49 of the United States Code specifies the FAA's authority to issue rules on aviation safety. Subtitle I, Section 106 describes the authority of the FAA Administrator. Subtitle VII, Aviation Programs, describes in more detail the scope of the agency's authority.

We are issuing this rulemaking under the authority described in Subtitle VII, Part A, Subpart III, Section 44701, "General requirements." Under that section, Congress charges the FAA with promoting safe flight of civil aircraft in air commerce by prescribing regulations for practices, methods, and procedures the Administrator finds necessary for safety in air commerce. This regulation is within the scope of that authority because it addresses an unsafe condition that is likely to exist or develop on products identified in this AD.

## Regulatory Findings

We have determined that this AD will not have federalism implications under Executive Order 13132. This AD will not have a substantial direct effect on the States, on the relationship between the national government and the States, or on the distribution of power and responsibilities among the various levels of government.

For the reasons discussed above, I certify that this AD:

1. Is not a "significant regulatory action" under Executive Order 12866;
2. Is not a "significant rule" under the DOT Regulatory Policies and Procedures (44 FR 11034, February 26, 1979); and
3. Will not have a significant economic impact, positive or negative, on a substantial number of small entities under the criteria of the Regulatory Flexibility Act.

We prepared a summary of the costs to comply with this AD (and other information as included in the Regulatory Evaluation) and placed it in the AD Docket. You may get a copy of this summary by sending a request to us at the address listed under **ADDRESSES**. Include "Docket No. FAA–2010–0632; Directorate Identifier 2010–CE–025–AD" in your request.

## List of Subjects in 14 CFR Part 39

Air transportation, Aircraft, Aviation safety, Incorporation by reference, Safety.

## Adoption of the Amendment

Accordingly, under the authority delegated to me by the Administrator, the Federal Aviation Administration amends part 39 of the Federal Aviation Regulations (14 CFR part 39) as follows:

## PART 39—AIRWORTHINESS DIRECTIVES

1. The authority citation for part 39 continues to read as follows:

**Authority:** 49 U.S.C. 106(g), 40113, 44701.

**§ 39.13 [Amended]**

■ 2. FAA amends § 39.13 by adding the following new AD:

**2010–18–01 Robert E. Rust, Jr.:** Amendment 39–16426; Docket No. FAA–2010–0632; Directorate Identifier 2010–CE–025–AD.

**Effective Date**

(a) This AD becomes effective on October 7, 2010.

**Affected ADs**

(b) None.

**Applicability**

(c) This AD applies to Models DeHavilland DH.C1 Chipmunk 21, DH.C1 Chipmunk 22, and DH.C1 Chipmunk 22A airplanes, all serial numbers, that are certificated in any category.

**Note:** These airplanes are also identified as CHIPMUNK 22A, CHIPMUNK DHC–1T10, CHIPMUNK T.10 MK–22, DH.C1 MK22A, DHC–1, DHC–1 CHIPMUNK, DHC–1 CHIPMUNK 22, DHC–1 SERIES 22, or DHC–1 T.MK. 10.

**Subject**

(d) Air Transport Association of America (ATA) Code 27: Flight Controls.

**Unsafe Condition**

(e) This AD results from a report of a latch plate supplied under part number (P/N) C1–CF–1489 failing in service. The part in question was not manufactured to the applicable de Havilland drawing. The unapproved latch plate was made of a shaft that was pressed into a plate, rather than being machined from bar material as one piece. The shaft and plate on the unapproved part can become separated or bent, resulting in rapid wear and failure of the part. This condition, if not corrected, could result in an un-commanded retraction of the flaps. This failure could lead to a stall during a landing approach.

**Compliance**

(f) To address this problem, you must do the following, unless already done:

| Actions | Compliance | Procedures |
|---|---|---|
| (1) Inspect the flap operating system to identify the P/N of the latch plate installed. If latch plate P/N C1–CF–1489 is installed, inspect the latch plate to determine if it is in compliance with the design standard. An unapproved latch plate P/N C1–CF–1489 is made from two pieces pressed together while one that complies with the design standard is machined in one piece from bar material. | Within 50 hours time-in-service (TIS) after October 7, 2010 (the effective date of this AD) or within 90 days after October 7, 2010 (the effective date of this AD), whichever occurs first. | Follow de Havilland Support Limited Technical News Sheet (TNS) CT(C1) No 208 Issue 1, dated January 30, 2009. |
| (2) If during the inspection required in paragraph (f)(1) of this AD an unapproved latch plate P/N C1–CF–1489 is found, replace the latch plate with a latch plate that complies with the design standard. The following U.S. standard hardware may be substituted for the hardware specified in the service information: (i) 1/16" diameter cotter pin that is P/N MS24665–153 (or equivalent) in place of split pin P/N SP90/C; and (ii) Washer that is P/N MS15795–806B (or equivalent) in place of washer P/N SP13/B. | Before further flight after the inspection where the unapproved latch plate P/N C1–CF–1849 was found. | Follow de Havilland Support Limited TNS CT(C1) No 208 Issue 1, dated January 30, 2009. |

**Alternative Methods of Compliance (AMOCs)**

(g) The Manager, Atlanta Aircraft Certification Office (ACO), FAA, has the authority to approve AMOCs for this AD, if requested using the procedures found in 14 CFR 39.19. Send information to ATTN: Carey O'Kelley, Aerospace Engineer, FAA, Atlanta ACO, 1701 Columbia Avenue, College Park, Georgia 30337; telephone: (404) 474–5543; fax: (404) 474–5606. Before using any approved AMOC on any airplane to which the AMOC applies, notify your appropriate principal inspector (PI) in the FAA Flight Standards District Office (FSDO), or lacking a PI, your local FSDO.

**Material Incorporated by Reference**

(h) You must use de Havilland Support Limited TNS CT(C1) No 208 Issue 1, dated January 30, 2009, to do the actions required by this AD, unless the AD specifies otherwise.

(1) The Director of the Federal Register approved the incorporation by reference of this service information under 5 U.S.C. 552(a) and 1 CFR part 51.

(2) For service information identified in this AD, contact de Havilland Support Limited, Duxford Airfield, Cambridgeshire, CB22 4QR, England, phone: +44 (0) 1223 830090; fax: +44 (0) 1223 830085; e-mail: *info@dhsupport.com;* Internet: *http://www.dhsupport.com/*.

(3) You may review copies of the service information incorporated by reference for this AD at the FAA, Central Region, Office of the Regional Counsel, 901 Locust, Kansas City, Missouri 64106. For information on the availability of this material at the Central Region, call (816) 329–3768.

(4) You may also review copies of the service information incorporated by reference for this AD at the National Archives and Records Administration (NARA). For information on the availability of this material at NARA, call (202) 741–6030, or go to: *http://www.archives.gov/federal_register/code_of_federal_regulations/ibr_locations.html.*

Issued in Kansas City, Missouri, on August 25, 2010.

**John R. Colomy,**

*Acting Manager, Small Airplane Directorate, Aircraft Certification Service.*

[FR Doc. 2010–21741 Filed 9–1–10; 8:45 am]

BILLING CODE 4910–13–P

## DEPARTMENT OF TRANSPORTATION

## Federal Aviation Administration

## 14 CFR Part 73

**[Docket No. FAA–2010–0693; Airspace Docket No. 10–ASW–6]**

**RIN 2120–AA66**

## Amendment of Restricted Area R–5113; Socorro, NM

**AGENCY:** Federal Aviation Administration (FAA), DOT.

**ACTION:** Final rule.

**SUMMARY:** This action changes the using agency of Restricted Area R–5113, Socorro, NM, to "U.S. Air Force, Air Force Research Laboratory." There are no changes to the boundaries; designated altitudes; time of designation; or activities conducted within the affected restricted area.

**DATES:** Effective date 0901 UTC, November 18, 2010.

**FOR FURTHER INFORMATION CONTACT:** Colby Abbott, Airspace and Rules Group, Office of System Operations Airspace and AIM, Federal Aviation Administration, 800 Independence Avenue, SW., Washington, DC 20591; telephone: (202) 267–8783.

**SUPPLEMENTARY INFORMATION:**

### History

On March 3, 2010, the U. S. Navy requested that the FAA change the name of the using agency for Restricted Area R–5113 at Socorro, NM, to "U.S. Air Force, Air Force Research Laboratory." This change is required to reflect the change in the military service overseeing the continued lightning research work performed by New Mexico Tech University and the National Science Foundation.

### The Rule

This action amends Title 14 Code of Federal Regulations (14 CFR) part 73 by amending the using agency for Restricted Area R–5113 at Socorro, NM, from "U.S. Navy, Office of Naval Research, Atmospheric Sciences" to "U.S. Air Force, Air Force Research Laboratory." This is an administrative change and does not affect the boundaries, designated altitudes, or activities conducted within the restricted area; therefore, notice and public procedures under 5 U.S.C. 553(b) are unnecessary.

Section 73.51 of Title 14 CFR part 73 was republished in FAA Order 7400.8S, effective February 16, 2010.

The FAA has determined that this action only involves an established body of technical regulations for which frequent and routine amendments are necessary to keep them operationally current. Therefore, this regulation: (1) Is not a "significant regulatory action" under Executive Order 12866; (2) is not a "significant rule" under DOT Regulatory Policies and Procedures (44 FR 11034; February 26, 1979); and (3) does not warrant preparation of a regulatory evaluation as the anticipated impact is so minimal. Since this is a routine matter that will only affect air traffic procedures and air navigation, it is certified that this rule, when promulgated, will not have a significant economic impact on a substantial number of small entities under the criteria of the Regulatory Flexibility Act.

The FAA's authority to issue rules regarding aviation safety is found in Title 49 of the United States Code. Subtitle I, Section 106 describes the authority of the FAA Administrator. Subtitle VII, Aviation Programs, describes in more detail the scope of the agency's authority.

This rulemaking is promulgated under the authority described in Subtitle VII, Part A, Subpart I, Section 40103. Under that section, the FAA is charged with prescribing regulations to assign the use of the airspace necessary to ensure the safety of aircraft and the efficient use of airspace. This regulation is within the scope of that authority as amends Restricted Area R–5113 in Socorro, NM.

### Environmental Review

The FAA has determined that this action qualifies for categorical exclusion under the National Environmental Policy Act in accordance with FAA Order 1050.1E, Environmental Impacts: Policies and Procedures, paragraph 311d. This airspace action is an administrative change to the descriptions of the affected restricted area to update the using agency name. It does not alter the dimensions, altitudes, or times of designation of the airspace; therefore, it is not expected to cause any potentially significant environmental impacts, and no extraordinary circumstances exist that warrant preparation of an environmental assessment.

### List of Subjects in 14 CFR Part 73

Airspace, Prohibited areas, Restricted areas.

### Adoption of the Amendment

■ In consideration of the foregoing, the Federal Aviation Administration amends 14 CFR part 73, as follows:

## PART 73—SPECIAL USE AIRSPACE

■ 1. The authority citation for part 73 continues to read as follows:

**Authority:** 49 U.S.C. 106(g), 40103, 40113, 40120; E.O. 10854, 24 FR 9565, 3 CFR, 1959–1963 Comp., p. 389.

**§ 73.51 [Amended]**

■ 2. Section 73.51 is amended as follows:

* * * * *

**R–5113 Socorro, NM [Amended]**

* * * * *

By removing the words "Using Agency. U.S. Navy, Office of Naval Research, Atmospheric Sciences" and inserting the words "Using Agency. U.S. Air Force, Air Force Research Laboratory."

Issued in Washington, DC, on August 23, 2010.

**Edith V. Parish,**

*Manager, Airspace and Rules Group.*

[FR Doc. 2010–21928 Filed 9–1–10; 8:45 am]

**BILLING CODE 4910–13–P**

## DEPARTMENT OF COMMERCE

### Bureau of Industry and Security

### 15 CFR Parts 730, 732, 734, 736, 738, 740, 742, 743, 744, 746, 747, 748, 750, 752, 754, 756, 758, 760, 762, 764, 766, 768, 770, 772, and 774

**[Docket No. 100824381–0381–02]**

**RIN 0694–AF00**

## Updated Statements of Legal Authority for the Export Administration Regulations

**AGENCY:** Bureau of Industry and Security, Commerce.

**ACTION:** Final rule.

**SUMMARY:** This rule updates the Code of Federal Regulations legal authority citations for the Export Administration Regulations (EAR) to include the citation to the President's Notice of August 12, 2010—Continuation of Emergency Regarding Export Control Regulations.

**DATES:** The rule is effective September 2, 2010.

**ADDRESSES:** Comments concerning this rule should be sent to *publiccomments @bis.doc.gov,* fax (202) 482–3355, or to Regulatory Policy Division, Bureau of Industry and Security, Room H2705, U.S. Department of Commerce, Washington, DC 20230. Please refer to regulatory identification number (RIN) 0694–AF00 in all comments, and in the subject line of e-mail comments.

**FOR FURTHER INFORMATION CONTACT:** William Arvin, Regulatory Policy Division, Bureau of Industry and Security, Telephone: (202) 482–2440.

**SUPPLEMENTARY INFORMATION:**

### Background

Since the Export Administration Act of 1979, as amended (50 U.S.C. app. sections 2401–2420 (2000)), expired in August 2001, parts 730–744 and 746–774 of the EAR (15 CFR Parts 730–774) have been continued in force pursuant to Executive Order 13222 of August 17, 2001, 3 CFR, 2001 Comp., p. 783 (2002) and the annual notices continuing the international emergency declared in that executive order. This rule revises authority citations paragraphs in the Code of Federal Regulations (CFR) to include the President's notice of August 12, 2010—Continuation of Emergency Regarding Export Control Regulations (74 FR 50681, August 16, 2010), which is the most recent such annual notice. This rule is purely procedural, and makes no changes other than to revise CFR authority citations paragraphs. It

does not change the text of any section of the EAR, nor does it alter any right, obligation or prohibition that applies to any person under the EAR.

**Rulemaking Requirements**

1. This rule has been determined to be not significant for purposes of Executive Order 12866.

2. Notwithstanding any other provision of law, no person is required to respond to, nor shall any person be subject to a penalty for failure to comply with, a collection of information subject to the requirements of the Paperwork Reduction Act of 1995 (44 U.S.C. 3501 *et seq.*) (PRA), unless that collection of information displays a currently valid Office of Management and Budget (OMB) Control Number. This rule does not involve any collection of information.

3. This rule does not contain policies with Federalism implications as that term is defined under Executive Order 13132.

4. The Department finds that there is good cause under 5 U.S.C. 553(b)(3)(B) to waive the provisions of the Administrative Procedure Act requiring prior notice and the opportunity for public comment because they are unnecessary. This rule only updates legal authority citations. This rule does not alter any right, obligation or prohibition that applies to any person under the EAR. Because these revisions are not substantive changes, it is unnecessary to provide notice and opportunity for public comment. In addition, the 30-day delay in effectiveness required by 5 U.S.C. 553(d) is not applicable because this rule is not a substantive rule. Because neither the Administrative Procedure Act nor any other law requires that notice of proposed rulemaking and an opportunity for public comment be given for this rule, the analytical requirements of the Regulatory Flexibility Act (5 U.S.C. 601 *et seq.*) are not applicable.

**List of Subjects**

*15 CFR Part 730*

Administrative practice and procedure, Advisory committees, Exports, Reporting and recordkeeping requirements, Strategic and critical materials.

*15 CFR Parts 732, 740, 748, 750, 752, and 758*

Administrative practice and procedure, Exports, Reporting and recordkeeping requirements.

*15 CFR Part 734*

Administrative practice and procedure, Exports, Inventions and patents, Research, Science and technology.

*15 CFR Parts 736, 738, 770, and 772*

Exports.

*15 CFR Part 742*

Exports, Terrorism.

*15 CFR Part 743*

Administrative practice and procedure, Reporting and recordkeeping requirements.

*15 CFR Part 744*

Exports, Reporting and recordkeeping requirements, Terrorism.

*15 CFR Parts 746 and 774*

Exports, Reporting and recordkeeping requirements.

*15 CFR Part 747*

Administrative practice and procedure, Exports, Foreign trade, Reporting and recordkeeping requirements.

*15 CFR Part 754*

Agricultural commodities, Exports, Forests and forest products, Horses, Petroleum, Reporting and recordkeeping requirements.

*15 CFR Part 756*

Administrative practice and procedure, Exports, Penalties.

*15 CFR Part 760*

Boycotts, Exports, Reporting and recordkeeping requirements.

*15 CFR Part 762*

Administrative practice and procedure, Business and industry, Confidential business information, Exports, Reporting and recordkeeping requirements.

*15 CFR Part 764*

Administrative practice and procedure, Exports, Law enforcement, Penalties.

*15 CFR Part 766*

Administrative practice and procedure, Confidential business information, Exports, Law enforcement, Penalties.

*15 CFR Part 768*

Administrative practice and procedure, Exports, Reporting and recordkeeping requirements, Science and technology.

■ Accordingly, parts 730, 732, 734, 736, 738, 740, 742, 743, 744, 746, 747, 748, 750, 752, 754, 756, 758, 760, 762, 764, 766, 768, 770, 772 and 774 of the EAR (15 CFR parts 700–774) are amended as follows:

## PART 730—[AMENDED]

■ 1. The authority citation for 15 CFR part 730 is revised to read as follows:

**Authority:** 50 U.S.C. app. 2401 *et seq.;* 50 U.S.C. 1701 *et seq.;* 10 U.S.C. 7420; 10 U.S.C. 7430(e); 22 U.S.C. 287c; 22 U.S.C. 2151 note; 22 U.S.C. 3201 *et seq.;* 22 U.S.C. 6004; 30 U.S.C. 185(s), 185(u); 42 U.S.C. 2139a; 42 U.S.C. 6212; 43 U.S.C. 1354; 15 U.S.C. 1824a; 50 U.S.C. app. 5; 22 U.S.C. 7201 *et seq.;* 22 U.S.C. 7210; E.O. 11912, 41 FR 15825, 3 CFR, 1976 Comp., p. 114; E.O. 12002, 42 FR 35623, 3 CFR, 1977 Comp., p. 133; E.O. 12058, 43 FR 20947, 3 CFR, 1978 Comp., p. 179; E.O. 12214, 45 FR 29783, 3 CFR, 1980 Comp., p. 256; E.O. 12851, 58 FR 33181, 3 CFR, 1993 Comp., p. 608; E.O. 12854, 58 FR 36587, 3 CFR, 1993 Comp., p. 179; E.O. 12918, 59 FR 28205, 3 CFR, 1994 Comp., p. 899; E.O. 12938, 59 FR 59099, 3 CFR, 1994 Comp., p. 950; E.O. 12947, 60 FR 5079, 3 CFR, 1995 Comp., p. 356; E.O. 12981, 60 FR 62981, 3 CFR, 1995 Comp., p. 419; E.O. 13020, 61 FR 54079, 3 CFR, 1996 Comp. p. 219; E.O. 13026, 61 FR 58767, 3 CFR, 1996 Comp., p. 228; E.O. 13099, 63 FR 45167, 3 CFR, 1998 Comp., p. 208; E.O. 13222, 66 FR 44025, 3 CFR, 2001 Comp., p. 783; E.O. 13224, 66 FR 49079, 3 CFR, 2001 Comp., p. 786; E.O. 13338, 69 FR 26751, May 13, 2004; Notice of August 12, 2010, 75 FR 50681 (August 16, 2010); Notice of November 6, 2009, 74 FR 58187 (November 10, 2009).

## PART 732—[AMENDED]

■ 2. The authority citation for 15 CFR part 732 is revised to read as follows:

**Authority:** 50 U.S.C. app. 2401 *et seq.;* 50 U.S.C. 1701 *et seq.;* E.O. 13026, 61 FR 58767, 3 CFR, 1996 Comp., p. 228; E.O. 13222, 66 FR 44025, 3 CFR, 2001 Comp., p. 783; Notice of August 12, 2010, 75 FR 50681 (August 16, 2010).

## PART 734—[AMENDED]

■ 3. The authority citation for 15 CFR part 734 is revised to read as follows:

**Authority:** 50 U.S.C. app. 2401 *et seq.;* 50 U.S.C. 1701 *et seq.;* E.O. 12938, 59 FR 59099, 3 CFR, 1994 Comp., p. 950; E.O. 13020, 61 FR 54079, 3 CFR, 1996 Comp. p. 219; E.O. 13026, 61 FR 58767, 3 CFR, 1996 Comp., p. 228; E.O. 13222, 66 FR 44025, 3 CFR, 2001 Comp., p. 783; Notice of August 12, 2010, 75 FR 50681 (August 16, 2010); Notice of November 6, 2009, 74 FR 58187 (November 10, 2009).

## PART 736—[AMENDED]

■ 4. The authority citation for 15 CFR part 736 is revised to read as follows:

**Authority:** 50 U.S.C. app. 2401 *et seq.;* 50 U.S.C. 1701 *et seq.;* 22 U.S.C. 2151 note; E.O. 12938, 59 FR 59099, 3 CFR, 1994 Comp., p. 950; E.O. 13020, 61 FR 54079, 3 CFR, 1996

Comp. p. 219; E.O. 13026, 61 FR 58767, 3 CFR, 1996 Comp., p. 228; E.O. 13222, 66 FR 44025, 3 CFR, 2001 Comp., p. 783; E.O. 13338, 69 FR 26751, May 13, 2004; Notice of August 12, 2010, 75 FR 50681 (August 16, 2010); Notice of November 6, 2009, 74 FR 58187 (November 10, 2009).

## PART 738—[AMENDED]

■ 5. The authority citation for 15 CFR part 738 is revised to read as follows:

**Authority:** 50 U.S.C. app. 2401 *et seq.;* 50 U.S.C. 1701 *et seq.;* 10 U.S.C. 7420; 10 U.S.C. 7430(e); 22 U.S.C. 287c; 22 U.S.C. 3201 *et seq.;* 22 U.S.C. 6004; 30 U.S.C. 185(s), 185(u); 42 U.S.C. 2139a; 42 U.S.C. 6212; 43 U.S.C. 1354; 15 U.S.C 1824a; 50 U.S.C. app. 5; 22 U.S.C. 7201 *et seq.;* 22 U.S.C. 7210; E.O. 13026, 61 FR 58767, 3 CFR, 1996 Comp., p. 228; E.O. 13222, 66 FR 44025, 3 CFR, 2001 Comp., p. 783; Notice of August 12, 2010, 75 FR 50681 (August 16, 2010).

## PART 740—[AMENDED]

■ 6. The authority citation for 15 CFR part 740 is revised to read as follows:

**Authority:** 50 U.S.C. app. 2401 *et seq.;* 50 U.S.C. 1701 *et seq.;* 22 U.S.C. 7201 *et seq.;* E.O. 13026, 61 FR 58767, 3 CFR, 1996 Comp., p. 228; E.O. 13222, 66 FR 44025, 3 CFR, 2001 Comp., p. 783; Notice of August 12, 2010, 75 FR 50681 (August 16, 2010).

## PART 742—[AMENDED]

■ 7. The authority citation for 15 CFR part 742 is revised to read as follows:

**Authority:** 50 U.S.C. app. 2401 *et seq.;* 50 U.S.C. 1701 *et seq.;* 22 U.S.C. 3201 *et seq.;* 42 U.S.C. 2139a; 22 U.S.C. 7201 *et seq.;* 22 U.S.C. 7210; Sec 1503, Public Law 108–11, 117 Stat. 559; E.O. 12058, 43 FR 20947, 3 CFR, 1978 Comp., p. 179; E.O. 12851, 58 FR 33181, 3 CFR, 1993 Comp., p. 608; E.O. 12938, 59 FR 59099, 3 CFR, 1994 Comp., p. 950; E.O. 13026, 61 FR 58767, 3 CFR, 1996 Comp., p. 228; E.O. 13222, 66 FR 44025, 3 CFR, 2001 Comp., p. 783; Presidential Determination 2003–23 of May 7, 2003, 68 FR 26459, May 16, 2003; Notice of August 12, 2010, 75 FR 50681 (August 16, 2010); Notice of November 6, 2009, 74 FR 58187 (November 10, 2009).

## PART 743—[AMENDED]

■ 8. The authority citation for 15 CFR part 743 is revised to read as follows:

**Authority:** 50 U.S.C. app. 2401 *et seq.;* 50 U.S.C. 1701 *et seq.;* E.O. 13222, 66 FR 44025, 3 CFR, 2001 Comp., p. 783; Notice of August 12, 2010, 75 FR 50681 (August 16, 2010).

## PART 744—[AMENDED]

■ 9. The authority citation for 15 CFR part 744 is revised to read as follows:

**Authority:** 50 U.S.C. app. 2401 *et seq.;* 50 U.S.C. 1701 *et seq.;* 22 U.S.C. 3201 *et seq.;* 42 U.S.C. 2139a; 22 U.S.C. 7201 *et seq.;* 22 U.S.C. 7210; E.O. 12058, 43 FR 20947, 3 CFR, 1978 Comp., p. 179; E.O. 12851, 58 FR 33181, 3 CFR, 1993 Comp., p. 608; E.O. 12938, 59 FR 59099, 3 CFR, 1994 Comp., p. 950; E.O. 12947, 60 FR 5079, 3 CFR, 1995 Comp., p. 356; E.O. 13026, 61 FR 58767, 3 CFR, 1996 Comp., p. 228; E.O. 13099, 63 FR 45167, 3 CFR, 1998 Comp., p. 208; E.O. 13222, 66 FR 44025, 3 CFR, 2001 Comp., p. 783; E.O. 13224, 66 FR 49079, 3 CFR, 2001 Comp., p. 786; Notice of August 12, 2010, 75 FR 50681 (August 16, 2010); Notice of November 6, 2009, 74 FR 58187 (November 10, 2009).

## PART 746—[AMENDED]

■ 10. The authority citation for 15 CFR part 746 is revised to read as follows:

**Authority:** 50 U.S.C. app. 2401 *et seq.;* 50 U.S.C. 1701 *et seq.;* 22 U.S.C. 287c; Sec 1503, Public Law 108–11, 117 Stat. 559; 22 U.S.C. 6004; 22 U.S.C. 7201 *et seq.;* 22 U.S.C. 7210; E.O. 12854, 58 FR 36587, 3 CFR, 1993 Comp., p. 614; E.O. 12918, 59 FR 28205, 3 CFR, 1994 Comp., p. 899; E.O. 13222, 3 CFR, 2001 Comp., p. 783; Presidential Determination 2003–23 of May 7, 2003, 68 FR 26459, May 16, 2003; Presidential Determination 2007–7 of December 7, 2006, 72 FR 1899 (January 16, 2007); Notice of August 12, 2010, 75 FR 50681 (August 16, 2010).

## PART 747—[AMENDED]

■ 11. The authority citation for 15 CFR part 747 is revised to read as follows:

**Authority:** 50 U.S.C. app. 2401 *et seq.;* 50 U.S.C. 1701 *et seq.;* Sec 1503, Public Law 108–11, 117 Stat. 559; E.O. 12918, 59 FR 28205, 3 CFR, 1994 Comp., p. 899; E.O. 13222, 3 CFR, 2001 Comp., p. 783; Presidential Determination 2003–23 of May 7, 2003, 68 FR 26459, May 16, 2003; Notice of August 12, 2010, 75 FR 50681 (August 16, 2010).

## PART 748—[AMENDED]

■ 12. The authority citation for 15 CFR part 748 is revised to read as follows:

**Authority:** 50 U.S.C. app. 2401 *et seq.;* 50 U.S.C. 1701 *et seq.;* E.O. 13026, 61 FR 58767, 3 CFR, 1996 Comp., p. 228; E.O. 13222, 66 FR 44025, 3 CFR, 2001 Comp., p. 783; Notice of August 12, 2010, 75 FR 50681 (August 16, 2010).

## PART 750—[AMENDED]

■ 13. The authority citation for 15 CFR part 750 is revised to read as follows:

**Authority:** 50 U.S.C. app. 2401 *et seq.;* 50 U.S.C. 1701 *et seq.;* Sec 1503, Public Law 108–11, 117 Stat. 559; E.O. 13026, 61 FR 58767, 3 CFR, 1996 Comp., p. 228; E.O. 13222, 66 FR 44025, 3 CFR, 2001 Comp., p. 783; Presidential Determination 2003–23 of May 7, 2003, 68 FR 26459, May 16, 2003; Notice of August 12, 2010, 75 FR 50681 (August 16, 2010).

## PART 752—[AMENDED]

■ 14. The authority citation for 15 CFR part 752 is revised to read as follows:

**Authority:** 50 U.S.C. app. 2401 *et seq.;* 50 U.S.C. 1701 *et seq.;* E.O. 13020, 61 FR 54079, 3 CFR, 1996 Comp. p. 219; E.O. 13222, 66 FR 44025, 3 CFR, 2001 Comp., p. 783; Notice of August 12, 2010, 75 FR 50681 (August 16, 2010).

## PART 754—[AMENDED]

■ 15. The authority citation for 15 CFR part 754 is revised to read as follows:

**Authority:** 50 U.S.C. app. 2401 *et seq.;* 50 U.S.C. 1701 *et seq.;* 10 U.S.C. 7420; 10 U.S.C. 7430(e); 30 U.S.C. 185(s), 185(u); 42 U.S.C. 6212; 43 U.S.C. 1354; 15 U.S.C. 1824a; E.O. 11912, 41 FR 15825, 3 CFR, 1976 Comp., p. 114; E.O. 13222, 66 FR 44025, 3 CFR, 2001 Comp., p. 783; Notice of August 12, 2010, 75 FR 50681 (August 16, 2010).

## PART 756—[AMENDED]

■ 16. The authority citation for 15 CFR part 756 is revised to read as follows:

**Authority:** 50 U.S.C. app. 2401 *et seq.;* 50 U.S.C. 1701 *et seq.;* E.O. 13222, 66 FR 44025, 3 CFR, 2001 Comp., p. 783; Notice of August 12, 2010, 75 FR 50681 (August 16, 2010).

## PART 758—[AMENDED]

■ 17. The authority citation for 15 CFR part 758 is revised to read as follows:

**Authority:** 50 U.S.C. app. 2401 *et seq.;* 50 U.S.C. 1701 *et seq.;* E.O. 13222, 66 FR 44025, 3 CFR, 2001 Comp., p. 783; Notice of August 12, 2010, 75 FR 50681 (August 16, 2010).

## PART 760—[AMENDED]

■ 18. The authority citation for 15 CFR part 760 is revised to read as follows:

**Authority:** 50 U.S.C. app. 2401 *et seq.;* 50 U.S.C. 1701 *et seq.;* E.O. 13222, 66 FR 44025, 3 CFR, 2001 Comp., p. 783; Notice of August 12, 2010, 75 FR 50681 (August 16, 2010).

## PART 762—[AMENDED]

■ 19. The authority citation for 15 CFR part 762 is revised to read as follows:

**Authority:** 50 U.S.C. app. 2401 *et seq.;* 50 U.S.C. 1701 *et seq.;* E.O. 13222, 66 FR 44025, 3 CFR, 2001 Comp., p. 783; Notice of August 12, 2010, 75 FR 50681 (August 16, 2010).

## PART 764—[AMENDED]

■ 20. The authority citation for 15 CFR part 764 is revised to read as follows:

**Authority:** 50 U.S.C. app. 2401 *et seq.;* 50 U.S.C. 1701 *et seq.;* E.O. 13222, 66 FR 44025, 3 CFR, 2001 Comp., p. 783; Notice of August 12, 2010, 75 FR 50681 (August 16, 2010).

## PART 766—[AMENDED]

■ 21. The authority citation for 15 CFR part 766 is revised to read as follows:

**Authority:** 50 U.S.C. app. 2401 *et seq.;* 50 U.S.C. 1701 *et seq.;* E.O. 13222, 66 FR 44025, 3 CFR, 2001 Comp., p. 783; Notice of August 12, 2010, 75 FR 50681 (August 16, 2010).

## PART 768—[AMENDED]

■ 22. The authority citation for 15 CFR part 768 is revised to read as follows:

**Authority:** 50 U.S.C. app. 2401 *et seq.;* 50 U.S.C. 1701 *et seq.;* E.O. 13222, 66 FR 44025, 3 CFR, 2001 Comp., p. 783; Notice of August 12, 2010, 75 FR 50681 (August 16, 2010).

## PART 770—[AMENDED]

■ 23. The authority citation for 15 CFR part 770 is revised to read as follows:

**Authority:** 50 U.S.C. app. 2401 *et seq.;* 50 U.S.C. 1701 *et seq.;* E.O. 13222, 66 FR 44025, 3 CFR, 2001 Comp., p. 783; Notice of August 12, 2010, 75 FR 50681 (August 16, 2010).

## PART 772—[AMENDED]

■ 24. The authority citation for 15 CFR part 772 is revised to read as follows:

**Authority:** 50 U.S.C. app. 2401 *et seq.;* 50 U.S.C. 1701 *et seq.;* E.O. 13222, 66 FR 44025, 3 CFR, 2001 Comp., p. 783; Notice of August 12, 2010, 75 FR 50681 (August 16, 2010).

## PART 774—[AMENDED]

■ 25. The authority citation for 15 CFR part 774 is revised to read as follows:

**Authority:** 50 U.S.C. app. 2401 *et seq.;* 50 U.S.C. 1701 *et seq.;* 10 U.S.C. 7420; 10 U.S.C. 7430(e); 22 U.S.C. 287c, 22 U.S.C. 3201 *et seq.;* 22 U.S.C. 6004; 30 U.S.C. 185(s), 185(u); 42 U.S.C. 2139a; 42 U.S.C. 6212; 43 U.S.C. 1354; 15 U.S.C. 1824a; 50 U.S.C. app. 5; 22 U.S.C. 7201 *et seq.;* 22 U.S.C. 7210; E.O. 13026, 61 FR 58767, 3 CFR, 1996 Comp., p. 228; E.O. 13222, 66 FR 44025, 3 CFR, 2001 Comp., p. 783; Notice of August 12, 2010, 75 FR 50681 (August 16, 2010).

Dated: August 30, 2010.

**Kevin J. Wolf,**

*Assistant Secretary for Export Administration.*

[FR Doc. 2010–21957 Filed 9–1–10; 8:45 am]

BILLING CODE 3510–33–P

## DEPARTMENT OF JUSTICE

### Drug Enforcement Administration

### 21 CFR Part 1310

**[Docket No. DEA–334F]**

**RIN 1117–AB29**

## Additions to Listing of Exempt Chemical Mixtures

**AGENCY:** Drug Enforcement Administration (DEA), Department of Justice.

**ACTION:** Direct final rule.

**SUMMARY:** Under this Direct Final Rule, the Drug Enforcement Administration (DEA) is updating the Table of Exempt Chemical Mixtures. This action is in response to DEA's review of new applications for exemption. Having reviewed applications and relevant information, DEA finds that these 21 preparations meet the applicable exemption criteria. Therefore, these products are exempted from the application of certain provisions of the Controlled Substances Act (CSA).

**DATES:** This Direct Final Rule is effective November 1, 2010 without further action, unless adverse comment is received by DEA no later than October 4, 2010. If any comments or objections raise significant issues regarding any findings of fact or conclusions of law upon which the order is based, the Administrator may suspend the effectiveness of the order until she has reconsidered the application in light of the comments and objections filed.

Written comments must be postmarked and electronic comments must be submitted on or before October 4, 2010. Commenters should be aware that the electronic Federal Docket Management System will not accept comments after midnight Eastern Time on the last day of the comment period.

**ADDRESSES:** To ensure proper handling of comments, please reference "Docket No. DEA–334" on all written and electronic correspondence. Written comments sent via regular or express mail should be sent to the Drug Enforcement Administration, Attention: DEA Federal Register Representative/ODL, 8701 Morrissette Drive, Springfield, VA 22152. Comments may be sent to DEA by sending an electronic message to *dea.diversion.policy@usdoj.gov.* Comments may also be sent electronically through *http://www.regulations.gov* using the electronic comment form provided on that site. An electronic copy of this document is also available at the *http://www.regulations.gov* Web site. DEA will accept attachments to electronic comments in Microsoft Word, WordPerfect, Adobe PDF, or Excel file formats only. DEA will not accept any file formats other than those specifically listed here.

Please note that DEA is requesting that electronic comments be submitted before midnight Eastern Time on the day the comment period closes because *http://www.regulations.gov* terminates the public's ability to submit comments at midnight Eastern Time on the day the comment period closes. Commenters in time zones other than Eastern Time may want to consider this so that their electronic comments are received. All comments sent via regular or express mail will be considered timely if postmarked on the day the comment period closes.

**FOR FURTHER INFORMATION CONTACT:** Christine A. Sannerud, PhD, Chief, Drug and Chemical Evaluation Section, Office of Diversion Control, Drug Enforcement Administration, 8701 Morrissette Drive, Springfield, VA 22152, Telephone (202) 307–7183.

**SUPPLEMENTARY INFORMATION:** Any interested person may file comments or objections to this order, on or before November 1, 2010. If any such comments or objections raise significant issues regarding any findings of fact or conclusions of law upon which the order is based, the Deputy Administrator may suspend the effectiveness of the order until she has reconsidered the application in light of the comments and objections filed. Thereafter, the Deputy Administrator shall reinstate, terminate, or amend the original order as deemed appropriate.

*Posting of Public Comments:* Please note that all comments received are considered part of the public record and made available for public inspection online at *http://www.regulations.gov.* Such information includes personal identifying information (such as your name, address, etc.) voluntarily submitted by the commenter.

If you want to submit personal identifying information (such as your name, address, etc.) as part of your comment, but do not want it to be posted online or made available in the public docket, you must include the phrase "PERSONAL IDENTIFYING INFORMATION" in the first paragraph of your comment. You must also place all the personal identifying information you do not want posted online or made available in the public docket in the first paragraph of your comment and identify what information you want redacted.

If you want to submit confidential business information as part of your comment, but do not want it to be posted online or made available in the public docket, you must include the phrase "CONFIDENTIAL BUSINESS INFORMATION" in the first paragraph of your comment. You must also prominently identify confidential business information to be redacted within the comment. If a comment has so much confidential business information that it cannot be effectively redacted, all or part of that comment may not be posted on *http://www.regulations.gov.*

Personal identifying information and confidential business information identified and located as set forth above will be redacted and the comment, in

redacted form, will be posted online and placed in the Drug Enforcement Administration's public docket file. Please note that the Freedom of Information Act applies to all comments received. If you wish to inspect the agency's public docket file in person by appointment, please see the **FOR FURTHER INFORMATION** paragraph.

**New Exempt Chemical Mixtures**

Pursuant to provisions of 21 CFR 1310.13 discussed further below, the manufacturers of 21 chemical mixtures listed below, in the form and quantity listed in the application submitted (indicated as the "date") have applied for exemption pursuant to 21 CFR 1310.13. DEA has reviewed the applications received, as well as any additional information that may have been requested. It has been determined that (1) each of these chemical mixtures is formulated in such a way that they cannot be easily used in the illicit production of a controlled substance; and (2) the listed chemical(s) contained in these chemical mixtures cannot be readily recovered. Therefore, each of these manufacturers has received a DEA letter granting exempted status on the date shown in the attached table. This regulatory action conforms DEA regulations to the exemptions previously issued.

**Background**

21 CFR 1310.13 provides that the Administrator of DEA may, by publication of a Final Rule in the **Federal Register**, exempt from the application of all or any part of the CSA a chemical mixture consisting of two or more chemical components, at least one of which is not a List I or List II chemical, if:

(1) The mixture is formulated in such a way that it cannot be easily used in the illicit production of a controlled substance; and

(2) The listed chemical or chemicals contained in the chemical mixture cannot be readily recovered.

Any manufacturer seeking an exemption for a chemical mixture, not automatically exempt under 21 CFR 1310.12, may apply to the Administrator by submitting an application for exemption which contains the following information:

(1) The name, address, and registration number, if any, of the applicant;

(2) The date of the application;

(3) The exact trade name(s) of the applicant's chemical mixture;

(4) The complete qualitative and quantitative composition of the chemical mixture (including all listed and all non-listed chemicals); or if a group of mixtures, the concentration range for the listed chemical and a listing of all non-listed chemicals with respective concentration ranges.

(5) The chemical and physical properties of the mixture and how they differ from the properties of the listed chemical or chemicals; and if a group of mixtures, how the group's properties differ from the properties of the listed chemical.

(6) A statement that the applicant believes justifies an exemption for the chemical mixture or group of mixtures. The statement must explain how the chemical mixture(s) meets the exemption criteria.

(7) A statement that the applicant accepts the right of the Administrator to terminate exemption from regulation for the chemical mixture(s) granted exemption under 21 CFR 1310.13.

(8) The identification of any information on the application that is considered by the applicant to be a trade secret or confidential and entitled to protection under U.S. laws restricting the public disclosure of such information.

The Administrator may require the applicant to submit such additional documents or written statements of fact relevant to the application that he deems necessary for determining if the application should be granted.

21 CFR 1310.13 further specifies that within 30 days after the receipt of an application for an exemption, the Administrator will notify the applicant of acceptance or rejection of the application. If the application is not accepted, an explanation will be provided. The Administrator is not required to accept an application if any information required pursuant to 21 CFR 1310.13 is lacking or not readily understood. The applicant may, however, amend the application to meet the requirements of this section.

If the exemption is granted, the applicant shall be notified in writing and the Administrator shall issue, and publish in the **Federal Register**, an order on the application. This order shall specify the date on which it shall take effect. The Administrator shall permit any interested person to file written comments on or objections to the order. If any comments or objections raise significant issues regarding any findings of fact or conclusions of law upon which the order is based, the Administrator may suspend the effectiveness of the order until she has reconsidered the application in light of the comments and objections filed. Thereafter, the Administrator shall reinstate, terminate, or amend the original order as deemed appropriate.

The Administrator may, at any time, terminate or modify an exemption for any product (21 CFR 1310.13(e)). In terminating or modifying an exemption, the Administrator shall issue, and publish in the **Federal Register**, notification of the removal of an exempt product or group of exempt products for which evidence of diversion has been found. This order shall specify the date on which the termination of exemption shall take effect. The Administrator shall permit any interested party to file written comments on or objections to the order within 60 days of the date of publication of the order in the **Federal Register**. If any such comments or objections raise significant issues regarding any finding of fact or conclusion of law upon which the order is based, the Administrator may suspend the effectiveness of the order until he has reconsidered the order in light of comments and objections filed. Thereafter, the Administrator shall reinstate, terminate, or amend the original order as determined appropriate.

A manufacturer of an exempted chemical mixture shall notify DEA, in writing, of any change in the quantitative or qualitative composition of a chemical mixture that has been granted an exemption by application (21 CFR 1310.13(g)). Changes include those greater than the range of concentration given in the application or that remove non-listed chemical(s) given in the application as part of the formulation. A new application will be required only if reformulation results in a new product having a different commercial application or can no longer be defined as part of a group of exempted chemicals. DEA must be notified of reformulation at least 30 days in advance of marketing the reformulated mixture. For a change in name or other designation, code, or any identifier, a written notification is required. DEA must be notified of any changes at least 60 days in advance of the effective date for the change.

Each manufacturer seeking exemption must apply for such an exemption (21 CFR 1310.13(h)) to ensure that each manufacturer's product warrants an exemption and is not subject to diversion. A formulation granted exemption by publication in the **Federal Register** will not be exempted for all manufacturers.

**Redelegation of Authority**

The Administrator has redelegated the authority to change the listing of exempt chemical mixtures to the Deputy

Administrator, Drug Enforcement Administration, pursuant to 28 CFR 0.104, Appendix to Subpart R. The current Table of Exempt Chemical Mixtures lists those products that have been granted exempt status prior to this update. That table can be viewed online at: *http://www.deadiversion.usdoj.gov/schedules/exempt/exempt_list.htm.*

**Regulatory Action**

Therefore, each of the 21 chemical mixtures for which DEA has received applications for exemptions from their manufacturers are designated as exempt chemical mixtures for the purposes set forth in 21 CFR 1310.13 and are exempted by the Administrator from application of sections 302, 303, 310, 1007, and 1008 of the Act (21 U.S.C. 822, 823, 830, 957 and 958).

DEA is updating the table in 21 CFR 1310.13(i) to include each of these exempt chemical mixtures.

**Regulatory Certifications**

**Regulatory Flexibility Act**

The Deputy Administrator hereby certifies that this rulemaking has been drafted in accordance with the Regulatory Flexibility Act (5 U.S.C. 601–612), and by approving it certifies that this regulation will not have a significant economic impact upon a substantial number of small entities. This regulation will not have a significant impact upon firms who distribute these products. In fact, the approval of Exempt Chemical Mixture status for these products reduces the regulatory requirements for distribution of these materials.

**Executive Order 12866**

The Deputy Administrator further certifies that this rulemaking has been drafted in accordance with the principles of Executive Order 12866 Section 1(b). It has been determined that this is not a significant regulatory action. Therefore, this action has not been reviewed by the Office of Management and Budget.

**Executive Order 12988**

The Deputy Administrator further certifies that this regulation meets the applicable standards set forth in Sections 3(a) and 3(b)(2) of Executive Order 12988.

**Executive Order 13132**

This rulemaking does not preempt or modify any provision of state law; nor does it impose enforcement responsibilities on any state; nor does it diminish the power of any state to enforce its own laws. Accordingly, this rulemaking does not have federalism implications warranting the application of Executive Order 13132.

**Unfunded Mandates Reform Act of 1995**

This rule will not result in the expenditure by State, local and tribal governments, in the aggregate, or by the private sector, of $120,000,000 or more (adjusted for inflation) in any one year, and will not significantly or uniquely affect small governments. Therefore, no actions were deemed necessary under the provisions of the Unfunded Mandates Reform Act of 1995.

**Congressional Review Act**

This rule is not a major rule as defined by Section 804 of the Small Business Regulatory Enforcement Fairness Act of 1996 (Congressional Review Act). This rule will not result in an annual effect on the economy of $100,000,000 or more; a major increase in costs or prices; or significant adverse effects on competition, employment, investment, productivity, innovation, or on the ability of United States-based companies to compete with foreign-based companies in domestic and export markets.

**Administrative Procedure Act**

An agency may find good cause to exempt a rule from prior public notice provisions of the Administrative Procedure Act (5 U.S.C. 553(b)(B)), if it is determined to be unnecessary, impracticable, or contrary to the public interest. DEA finds that it is contrary to the public interest to seek public comment prior to making the exemption of these 21 chemical mixtures from the requirements of the CSA effective. Each of these manufacturers has received a DEA letter granting exempted status for the specific products on the date shown in the attached table. This regulatory action conforms DEA regulations to the exemptions previously issued.

**List of Subjects in 21 CFR Part 1310**

Administrative practice and procedure, Drug traffic control, Listed chemicals.

■ Under the authority vested in the Attorney General by section 202(d) of the Act (21 U.S.C. 811(g)(3)(B)) and delegated to the Administrator of the Drug Enforcement Administration by regulations of the Department of Justice (28 CFR 0.100), and redelegated to the Deputy Administrator, Drug Enforcement Administration, the Deputy Administrator hereby amends 21 CFR part 1310 as set forth below.

## PART 1310—RECORDS AND REPORTS OF LISTED CHEMICALS AND CERTAIN MACHINES

■ 1. The authority citation for part 1310 continues to read as follows:

**Authority:** 21 U.S.C. 802, 827(h), 830, 871(b), 890.

■ 2. In § 1310.13(i), the table is revised to read as follows:

**§ 1310.13 Exemption of chemical mixtures; application.**

* * * * *

(i) * * *

EXEMPT CHEMICAL MIXTURES

| Manufacturer | Product name [1] | Form | Date |
|---|---|---|---|
| Cerilliant Corporation ..... | 1R,2S(-)-Ephedrine hydrochloride 1.0 mg/ml as free base in one of: 1,2-dimethoxyethane, acetonitrile, acetonitrile: water (≥ 50% acetonitrile), dimethylformamide, ethylene glycol, isopropanol, methanol, methanol/water (50:50), methanol/dimethyl sulfoxide (80:20), methylene chloride, or tetrahydrofuran. | Liquid ..... | 8/2/2007 |
| Cerilliant Corporation ..... | 1S,2R(+)-Ephedrine-$D_3$ hydrochloride 0.1 mg/ml as free base in one of: 1,2-dimethoxyethane, acetonitrile, acetonitrile: water (≥50% acetonitrile), dimethylformamide, ethylene glycol, isopropanol, methanol, methanol/water (50:50), methanol/dimethyl sulfoxide (80:20), methylene chloride, or tetrahydrofuran. | Liquid ..... | 8/2/2007 |

EXEMPT CHEMICAL MIXTURES—Continued

| Manufacturer | Product name [1] | Form | Date |
|---|---|---|---|
| Cerilliant Corporation | 1S,2R(+)-Ephedrine-$D_3$ hydrochloride 1.0 mg/ml as free base in one of: 1,2-dimethoxyethane, acetonitrile, acetonitrile: water (≥50% acetonitrile), dimethylformamide, ethylene glycol, isopropanol, methanol, methanol/water (50:50), methanol/dimethyl sulfoxide (80:20), methylene chloride, or tetrahydrofuran. | Liquid | 8/2/2007 |
| Cerilliant Corporation | 1S,2R(+)-Ephedrine hydrochloride 1.0 mg/ml as free base in one of: 1,2-dimethoxyethane, acetonitrile, acetonitrile: water (≥50% acetonitrile), dimethylformamide, ethylene glycol, isopropanol, methanol, methanol/water (50:50), methanol/dimethyl sulfoxide (80:20), methylene chloride, or tetrahydrofuran. | Liquid | 8/2/2007 |
| Cerilliant Corporation | Pseudoephedrine-$D_3$ hydrochloride 0.1 mg/ml as free base in one of: 1,2-dimethoxyethane, acetonitrile, acetonitrile: water (≥50% acetonitrile), dimethylformamide, ethylene glycol, isopropanol, methanol, methanol/water (50:50), methanol/dimethyl sulfoxide (80:20), methylene chloride, or tetrahydrofuran. | Liquid | 8/2/2007 |
| Cerilliant Corporation | R,R(-)-Pseudoephedrine 1.0 mg/ml as free base in one of: 1,2-dimethoxyethane, acetonitrile, acetonitrile: water (≥50% acetonitrile), dimethylformamide, ethylene glycol, isopropanol, methanol, methanol/water (50:50), methanol/dimethyl sulfoxide (80:20) methylene chloride, or tetrahydrofuran. | Liquid | 8/2/2007 |
| Cerilliant Corporation | S,S(+)-Pseudoephedrine 1.0 mg/ml as free base in one of: 1,2-dimethoxyethane, acetonitrile, acetonitrile: water (≥50% acetonitrile), dimethylformamide, ethylene glycol, isopropanol, methanol, methanol/water (50:50), methanol/dimethyl sulfoxide (80:20), methylene chloride, or tetrahydrofuran. | Liquid | 8/2/2007 |
| E.I. DuPont deNemours & Co. | RC–5156 | Liquid | 4/22/2005 |
| E.I. DuPont deNemours & Co. | VH–6037 | Liquid | 4/22/2005 |
| Hawthorne Products, Inc | Sole Pack Hoof Dressing | Paste | 8/14/2007 |
| Hawthorne Products, Inc | Sole Pack Hoof Packing | Paste | 8/14/2007 |
| Quality Assurance Service Corporation. | 10 to 1000 nanograms per milliliter of ephedrine in blood, serum, or urine | Liquid | 9/26/2007 |
| Quality Assurance Service Corporation. | 10 to 1000 nanograms per milliliter of pseudoephedrine in blood, serum, or urine | Liquid | 9/26/2007 |
| Quality Assurance Service Corporation. | 10 to 1000 nanograms per milliliter of phenylpropanolamine in blood, serum, or urine | Liquid | 9/26/2007 |
| Reichhold, Inc | Beckosol® 12021–00 AA–200, IA–441, P531–T | Liquid | 5/05/2005 |
| Reichhold, Inc | Urotuf® L06–30S, F78–50T | Liquid | 5/05/2005 |
| Reichhold, Inc | Beckosol AA–220 | Liquid | 6/14/2005 |
| Waterbury Companies, Inc | Waterbury 332500 | Liquid | 4/11/2005 |
| Waterbury Companies, Inc | Waterbury 332762 | Liquid | 4/11/2005 |
| Waterbury Companies, Inc | Waterbury 332400 | Liquid | 4/11/2005 |
| Waterbury Companies, Inc | Waterbury 346201 | Liquid | 4/11/2005 |

[1] Designate product line if a group.

Dated: August 20, 2010.

**Michele M. Leonhart,**

*Deputy Administrator.*

[FR Doc. 2010–21778 Filed 9–1–10; 8:45 am]

**BILLING CODE 4410–09–P**

## DEPARTMENT OF HOMELAND SECURITY

## Coast Guard

## 33 CFR Part 165

**[Docket No. USCG–2010–0790]**

## Security Zone, Mackinac Bridge, Straits of Mackinac, Michigan

**AGENCY:** Coast Guard, DHS.

**ACTION:** Notice of enforcement of regulation.

**SUMMARY:** The Coast Guard will enforce the Mackinac Bridge Walk security zone on the Straits of Mackinac from 6 a.m. through 11:59 p.m. on September 6, 2010. This action is necessary to protect pedestrians during the event from an accidental or intentional allision between a vessel and the bridge. During the enforcement period, navigational and operational restrictions will be placed on all vessels and persons transiting through the Straits area, under and around the Mackinac Bridge, located between Mackinaw City, MI, and St. Ignace, MI. All vessels and persons must obtain permission from the Captain of the Port (COTP) or a designated representative to enter or move within the security zone.

**DATES:** The regulations in 33 CFR 165.928 will be enforced from 6 a.m. through 11:59 p.m. on September 6, 2010.

**FOR FURTHER INFORMATION CONTACT:** If you have questions on this temporary rule, call or e-mail BMC Gregory Ford, Marine Event Coordinator, U.S. Coast Guard Sector Sault Sainte Marie; telephone 906–635–3222, e-mail *Gregory.C.Ford@uscg.mil.*

**SUPPLEMENTARY INFORMATION:** The Coast Guard will enforce the security zone for the annual Labor Day Mackinac Bridge Walk in 33 CFR 165.928 on September 6, 2010, from 6 a.m. to 11:59 p.m.

Under provisions of 33 CFR 165.928, a vessel or person may not enter or move within the regulated area, unless permission is received from the COTP or a designated representative. The Coast Guard may be assisted by other Federal, State, or local law enforcement agencies in enforcing this regulation.

This notice is issued under the authority of 33 CFR 165.928 and 5 U.S.C. 552(a). In addition to this notice

in the **Federal Register**, the Coast Guard will provide the maritime community with advance notification of this enforcement period via a Local Broadcast Notice to Mariners. If the COTP determines that the regulated area need not be enforced for the full duration stated in this notice, he may use a Broadcast Notice to Mariners to grant general permission to enter the regulated area.

Dated: August 24, 2010.

**J.C. McGuiness,**

*Captain, U.S. Coast Guard, Captain of the Port, Sault Sainte Marie.*

[FR Doc. 2010–21896 Filed 9–1–10; 8:45 am]

**BILLING CODE 9110–04–P**

## DEPARTMENT OF COMMERCE

### National Oceanic and Atmospheric Administration

### 50 CFR Part 635

**[Docket No. 0906221072–91425–02]**

**RIN 0648–XY56**

### Atlantic Highly Migratory Species; Inseason Action To Close the Commercial Porbeagle Shark Fishery

**AGENCY:** National Marine Fisheries Service (NMFS), National Oceanic and Atmospheric Administration (NOAA), Commerce.

**ACTION:** Notice; fishery closure.

**SUMMARY:** NMFS is closing the commercial fishery for porbeagle sharks. This action is necessary because landings for the 2010 fishing season has reached at least 80 percent of the available quota.

**DATES:** The commercial porbeagle shark fishery is closed effective 11:30 p.m. local time September 4, 2010 until, and if, NMFS announces, via a notice in the **Federal Register** that additional quota is available and the season is reopened.

**FOR FURTHER INFORMATION CONTACT:** Karyl Brewster-Geisz or Guy DuBeck, 301–713–2347; fax 301–713–1917.

**SUPPLEMENTARY INFORMATION:** The Atlantic shark fisheries are managed under the 2006 Consolidated Atlantic Highly Migratory Species (HMS) Fishery Management Plan (FMP), its amendments, and its implementing regulations found at 50 CFR part 635 issued under authority of the Magnuson-Stevens Fishery Conservation and Management Act (16 U.S.C. 1801 *et seq.*).

Under § 635.5(b)(1), shark dealers are required to report to NMFS all sharks landed every two weeks. Dealer reports for fish received between the 1st and 15th of any month must be received by NMFS by the 25th of that month. Dealer reports for fish received between the 16th and the end of any month must be received by NMFS by the 10th of the following month. Under § 635.28(b)(2), when NMFS projects that fishing season landings for a species group have reached or are about to reach 80 percent of the available quota, NMFS will file for publication with the Office of the **Federal Register** a notice of closure for that shark species group that will be effective no fewer than 5 days from the date of filing. From the effective date and time of the closure until NMFS announces, via a notice in the **Federal Register**, that additional quota is available and the season is reopened, the fishery for that species group is closed, even across fishing years.

On January 5, 2010 (75 FR 250), NMFS announced that the porbeagle shark fishery for the 2010 fishing year was open and the available porbeagle shark quota was 1.5 metric tons (mt) dressed weight (dw) (3,307 lb dw). Dealer reports through the July 31, 2010, reporting period indicate that 1.3 mt dw or 85 percent of the available quota for porbeagle sharks has been landed. Dealer reports received to date indicate that 14 percent of the quota was landed from the opening of the fishery on January 5, 2010, through January 31, 2010; 3 percent of the quota was landed in March; 12 percent was landed in April; 5 percent was landed in May; and 13 percent of the quota was landed in June. Preliminary numbers indicate that 38 percent of the quota was landed in July. The fishery has reached 85 percent of the quota, which exceeds the 80 percent limit specified in the regulations. Accordingly, NMFS is closing the commercial porbeagle shark fishery as of 11:30 p.m. local time September 7, 2010. This closure does not affect any other shark fishery.

During the closure, retention of porbeagle sharks is prohibited for persons fishing aboard vessels issued a commercial shark limited access permit under 50 CFR 635.4, unless the vessel is properly permitted to operate as a charter vessel or headboat for HMS and is engaged in a for-hire trip, in which case the recreational retention limits for sharks and "no sale" provisions apply (50 CFR 635.22(a) and (c)). A shark dealer issued a permit pursuant to § 635.4 may not purchase or receive porbeagle sharks from a vessel issued an Atlantic shark limited access permit (LAP), except that a permitted shark dealer or processor may possess porbeagle sharks that were harvested, off-loaded, and sold, traded, or bartered, prior to the effective date of the closure and were held in storage. Under this closure, a shark dealer issued a permit pursuant to § 635.4 may, in accordance with state regulations, purchase or receive a porbeagle sharks if the sharks were harvested, off-loaded, and sold, traded, or bartered from a vessel that fishes only in state waters and that has not been issued an Atlantic Shark LAP, HMS Angling permit, or HMS Charter/Headboat permit pursuant to § 635.4.

### Classification

Pursuant to 5 U.S.C. 553(b)(B), the Assistant Administrator for Fisheries, NOAA (AA), finds that providing for prior notice and public comment for this action is impracticable and contrary to the public interest because the fishery is currently underway, and any delay in this action would cause overharvest of the quota and be inconsistent with management requirements and objectives. If the quota is exceeded, the affected public is likely to experience reductions in the available quota and a lack of fishing opportunities in future seasons. For these reasons, the AA also finds good cause to waive the 30–day delay in effective date pursuant to 5 U.S.C. 553 (d)(3). This action is required under § 635.28(b)(2) and is exempt from review under Executive Order 12866.

**Authority:** 16 U.S.C. 1801 *et seq.*

Dated: August 30, 2010.

**Carrie Selberg,**

*Acting Director, Office of Sustainable Fisheries, National Marine Fisheries Service.*

[FR Doc. 2010–21961 Filed 8–30–10; 4:15 pm]

**BILLING CODE 3510–22–S**

## DEPARTMENT OF COMMERCE

### National Oceanic and Atmospheric Administration

### 50 CFR Part 648

**[Docket No. 0910051338–0151–02]**

**RIN 0648–XY20**

### Fisheries of the Northeastern United States; Northeast Multispecies Fishery; Modification of the Common Pool Day-at-Sea Accounting and Possession Prohibition for Witch Flounder

**AGENCY:** National Marine Fisheries Service (NMFS), National Oceanic and Atmospheric Administration (NOAA), Commerce.

**ACTION:** Temporary rule; request for comments.

**SUMMARY:** This action implements a differential Days-at-Sea (DAS) counting

factor of 2.0 to Category A DAS for Northeast (NE) multispecies vessels fishing under common pool regulations for the 2010 fishing year (FY) when fishing in the Inshore Gulf of Maine (GOM) Differential DAS Area, the Offshore GOM Differential DAS Area, the Inshore Georges Bank (GB) Differential Area, and the Offshore GB Differential Area. Vessels may transit the GOM and GB Differential DAS Areas without being charged the differential DAS rate, provided their gear is properly stowed according to the regulations. This action also implements a zero possession limit for witch flounder. The purpose is to decrease the likelihood that catch (landings and discards) of white hake and GOM cod will exceed the subcomponent of the annual catch limit (ACL) allocated to the common pool during FY 2010 (May 1, 2010 through April 30, 2011). Because witch flounder has already exceeded its sub-ACL, this action attempts to minimize additional overharvest by reducing the possession limit to zero. This action is taken under the authority of the regulations implementing Amendment 16 and Framework Adjustment 44 (FW 44) to the NE Multispecies Fishery Management Plan (FMP) and authority of the Magnuson-Stevens Fishery Conservation and Management Act (MSA).

**DATES:** Effective September 2, 2010, through April 30, 2011. Comments must be received no later than October 4, 2010.

**FOR FURTHER INFORMATION CONTACT:** Tom Warren, Fishery Policy Analyst, (978) 281–9347, fax (978) 281–9135.

**SUPPLEMENTARY INFORMATION:** The NE Multispecies FMP regulations governing the fishing effort control program for NE multispecies limited access vessels and the possession limits for all NE multispecies vessels include measures designed to prevent the ACLs specified for the common pool fishery from being exceeded (or under-harvested). Such measures authorize the Administrator of the Northeast Region NMFS (Regional Administrator) to make inseason adjustments to trip limits and/or inseason adjustments to differential DAS counting (§§ 648.86(o) and 648.82(o), respectively). Specifically, the Regional Administrator must project the catch of regulated species and ocean pout and determine whether the catch will exceed any of the sub-ACLs specified for common pool vessels. Based on such projections, if the catch will exceed or underharvest the common pool sub-ACLs, the Regional Administrator may, at any time during the FY, implement a differential DAS counting factor to all Category A DAS within the pertinent stock area(s), and/or adjust trip limits.

For FY 2010, the common pool sub-ACLs for all stocks, including witch flounder, and GOM cod, were specified by the final rule implementing Framework Adjustment (FW) 44 (75 FR 18356, April 9, 2010) to the FMP, and modified by a subsequent rule (75 FR 29459, May 26, 2010).

Since the start of FY 2010 (May 1, 2010), NMFS has monitored the common pool catch closely, and the Regional Administrator authority has been utilized several times to make inseason adjustments as necessary to reduce catch rates in order to prevent catch from exceeding sub-ACLs. Specifically, NMFS reduced the trip limits applicable to the common pool for GOM winter flounder, GOM haddock, GB haddock, GB winter flounder, and GB yellowtail flounder on May 27, 2010 (75 FR 29678; May 27, 2010). On July 30, 2010, a reduction in trip limits for GOM cod and a gear restriction for vessels fishing in the U.S./Canada Management Area were implemented in order to prevent the catch of GOM cod and GB yellowtail flounder by common pool vessels from exceeding their sub-ACLs (75 FR 44924; July 30, 2010). On August 6, 2010 (75 FR 48613; August 11, 2010), NMFS implemented a trip limit for witch flounder, removed the trip limit for pollock, and corrected the GOM cod trip limit applicable to vessels with a Handgear A permit in order to optimize catch for those stocks.

On August 19, 2010, NMFS determined that the catch of witch flounder, GOM cod, and white hake were 101 percent, 87 percent, and 47 percent of their respective sub-ACLs. Prior to this most recent catch report, NMFS conducted catch projections completed on August 11, 2010. These projections indicated that, by the end of FY 2010 (April 30, 2011), the catch of witch flounder, GOM cod, and white hake will be approximately 177 percent, 196 percent, and 205 percent of their respective sub-ACLs, if no action is taken to slow catch rates.

Because the catches of multiple stocks are projected to exceed their sub-ACLs, and inseason trip limits for GOM cod, GOM winter flounder, and witch flounder have already been implemented, this action implements DAS adjustments to further reduce catch rates so that sub-ACLs will not be exceeded. Additionally, because witch flounder has already exceeded its sub-ACL, this action implements a zero possession limit for the remainder of the FY for that stock.

Current catch estimates indicate that a relatively high percentage of the sub-ACLs have been caught during the first quarter of the fishing year, with only a fraction of the available DAS allocations used (approximately 30 percent). Considerable additional fishing effort is possible during the remainder of the FY which could result in exceeding the sub-ACLs, without these actions being taken.

The Magnuson-Stevens Act and the NE Multispecies FMP require that catch levels not be exceeded. Given the high catches early in the FY, as well as the difficulty in predicting future fishing behavior under Amendment 16 measures, effort reductions are necessary in specific areas at this time to ensure the sub-ACLs are not exceeded. Furthermore, overharvest of a sub-ACL would result in the implementation of accountability measures at the start of FY 2011. NMFS will continue to closely monitor the fishery and further adjust (increase or decrease) trip limits and DAS counting rates if available data and projections indicate that the sub-ACLs will be underharvested or overharvested.

This action implements a differential DAS counting rate of 2.0 to the Inshore GOM Differential DAS Area, Offshore GOM Differential DAS Area, Inshore GB Differential DAS Area, and Offshore GB Differential DAS Area. These areas were selected from among the five possible Differential DAS Areas defined in Amendment 16, to reflect both the location of the catch of the stocks targeted by this action, as defined in the regulations, as well as the location of the recent catches. The regulations implementing Amendment 16 state that the Offshore GOM, Inshore GB, and Offshore GB Differential DAS Areas are the pertinent areas with respect to DAS adjustments designed to affect witch flounder. The Inshore GOM Differential DAS Area is the pertinent area for GOM cod; the Inshore and Offshore GOM Differential Areas, and the Inshore GB Differential DAS Area, are pertinent for white hake.

With respect to the differential DAS counting factor necessary to reduce catch, the regulations state that it will be based on the projected portion of the sub-ACL caught, rounded to the nearest tenth. Further, if it is projected that catch will simultaneously exceed the sub-ACLs for several regulated species stocks within a particular area, the Regional Administrator may implement the most restrictive differential DAS counting factor derived for the sub-ACLs exceeded within that area.

The projections conducted for witch flounder, GOM cod, and white hake indicate 177 percent, 196 percent, and 205 percent of their respective sub-ACLs will be caught by the end of the fishing year without action being taken to slow catch rates. Based upon the regulations that prescribe the accounting methodology, the defined differential DAS areas, and the recent location of catch, a differential DAS counting factor of 2.0 applies to all Category A DAS used by common pool vessels within the Inshore and Offshore GOM Differential DAS Areas and the Inshore and Offshore GB Differential DAS Areas. This 2:1 DAS counting ratio is calculated to be sufficient to ensure that sub-ACLSs for white hake and GOM cod will not be exceeded. Because vessels are currently charged a full 24 hr for any day that is less than 24 hr, time fished will be first rounded up to account for a 24 hr day, to ensure the differential rate is effective in reducing effort sufficiently. For example, if a vessel fished for 13 hr in the GOM, the vessel would be charged 48 hr (i.e., 13 hr is rounded up to 24 hr, and multiplied by 2.0). If a vessel fished for 25 hr in the GOM, the vessel would be charged 96 hr (i.e., 25 hr is rounded up to 48 hr, and multiplied by 2.0). This differential DAS counting will be applied when fishing in the Inshore and Offshore GOM Differential DAS Areas and the Inshore and Offshore GM Differential Areas, based upon the first VMS position into the area, and the first VMS position outside of the area. For trips that fish both inside and outside of the areas covered by the differential DAS rate (i.e., within one of the differential DAS areas covered by the increased rate as described above, and also in the Southern New England (SNE) Differential DAS Area), the time spent fishing outside the differential areas will be counted as real time fished (time will not be rounded up to 24 hr nor will differential DAS accrue). For example, a vessel that fished for 20 hr in the GOM and 5 hr in SNE would be charged 53 hr (i.e., 20 hr (GOM) rounded up to 24 hr X 2.0 = 48; plus 5 hr (SNE) = 53 hr).

This action also allows for an exemption to the 2.0 differential DAS rate for vessels that merely transit the differential DAS areas. Thus, vessels may transit the GOM and GB Differential DAS Areas without being charged the 2.0 differential DAS rate, provided their gear is properly stowed according to the regulations at § 648.23(b). For example, if a vessel transits through the Inshore GB Differential DAS Area without fishing, and only fishes in the Offshore GB Differential DAS Area, the differential rate of 2:1 will only apply to time spent in the Offshore GB Differential DAS Area. Transiting time to and from Offshore GB Differential DAS Area would only be charged 1:1, provided all gear is stowed properly. However, should the vessel decide to fish in the Inshore GB Differential DAS Area, all time spent in the area would then be charged the 2:1 rate. This transiting provision avoids unnecessary restrictions on vessels that cannot reach fishing grounds to fish for stocks not affected by this action. Vessels must still declare all broad stocks areas (BSA) it intends to fish in prior to leaving port.

## Classification

This action is authorized by 50 CFR part 648 and is exempt from review under Executive Order 12866.

Pursuant to 5 U.S.C. 553(b)(3)(B) and (d)(3), there is good cause to waive prior notice and opportunity for public comment, as well as the delayed effectiveness for this action, because notice, comment, and a delayed effectiveness would be impracticable and contrary to the public interest. The regulations at §§ 648.82(o) and 648.86(o) grant the Regional Administrator the authority to implement adjustments to NE multispecies differential DAS counting and modifications to trip limits respectively, to prevent over-harvesting or under-harvesting the common pool sub-ACLs. This action will implement a more restrictive DAS counting rate in the GOM and GB in order to ensure that the common pool sub-ACLs for GOM cod and white hake are not overharvested, and the biological and economic objectives of the FMP are met. Differential DAS, as well as a zero possession limit for witch flounder, help to prevent the sub-ACL for this stock from being further exceeded.

It is important to take this action immediately because, based on current data and projections, continuation of the status quo will result in exceeding at least some of the common pool sub-ACLs prior to the end of the fishing year. Attainment of any of the common pool sub-ACLs in FY 2010 would trigger accountability measures for the common pool in FY 2011. These future restrictions could result in the loss of yield of other valuable species caught by vessels in the common pool.

The updated catch information that is the basis for this action only recently became available. The time necessary to provide for prior notice and comment, and delayed effectiveness for this action, would prevent NMFS from implementing necessary restrictions in a timely manner. A resulting delay in the curtailment of catch rate of these stocks could result in less revenue for the fishing industry and be counter to the objective of achieving optimum yield.

**Authority:** 16 U.S.C. 1801 *et seq.*

Dated: August 30, 2010.

**Carrie Selberg,**

*Acting Director, Office of Sustainable Fisheries, National Marine Fisheries Service.*

[FR Doc. 2010–21986 Filed 8–30–10; 4:15 pm]

BILLING CODE 3510–22–S

---

## DEPARTMENT OF COMMERCE

## National Oceanic and Atmospheric Administration

## 50 CFR Part 679

**[Docket No. 0910131362–0087–02]**

**RIN 0648–XY70**

## Fisheries of the Exclusive Economic Zone Off Alaska; Pacific Ocean Perch for Vessels Participating in the Rockfish Entry Level Fishery in the Central Regulatory Area of the Gulf of Alaska

**AGENCY:** National Marine Fisheries Service (NMFS), National Oceanic and Atmospheric Administration (NOAA), Commerce.

**ACTION:** Temporary rule; closure.

**SUMMARY:** NMFS is prohibiting directed fishing for Pacific ocean perch for vessels participating in the rockfish entry level fishery in the Central Regulatory Area of the Gulf of Alaska (GOA). This action is necessary to prevent exceeding the 2010 total allowable catch (TAC) of Pacific ocean perch allocated to vessels participating in the rockfish entry level fishery in the Central Regulatory Area of the GOA.

**DATES:** Effective 1200 hrs, Alaska local time (A.l.t.), September 1, 2010, through 2400 hrs, A.l.t., December 31, 2010.

**FOR FURTHER INFORMATION CONTACT:** Steve Whitney, 907–586–7269.

**SUPPLEMENTARY INFORMATION:** NMFS manages the groundfish fishery in the GOA exclusive economic zone according to the Fishery Management Plan for Groundfish of the Gulf of Alaska (FMP) prepared by the North Pacific Fishery Management Council under authority of the Magnuson-Stevens Fishery Conservation and Management Act. Regulations governing fishing by U.S. vessels in accordance with the FMP appear at subpart H of 50 CFR part 600 and 50 CFR part 679.

The 2010 TAC of Pacific ocean perch allocated to vessels participating in the entry level rockfish fishery in the

Central Regulatory Area of the GOA is 512 metric tons as established by the final 2010 and 2011 harvest specifications for groundfish in the GOA (75 FR 11749, March 12, 2010). Section 679.83(a)(2) allows trawl or longline gear vessels participating in the entry level rockfish fishery to harvest any unused Pacific ocean perch after 1200 hrs, A.l.t., September 1, 2010.

As of September 1, 2010, 94 mt remains in the combined entry level longline and entry level trawl allocations of Pacific ocean perch. In accordance with § 679.83(a)(3), the Administrator, Alaska Region, NMFS (Regional Administrator), has determined that the remaining 2010 TAC of Pacific ocean perch allocated to vessels participating in the entry level longline rockfish and entry level trawl fisheries in the Central Regulatory Area of the GOA is insufficient to support directed fishing. Consequently, NMFS is prohibiting directed fishing for Pacific ocean perch for longline and trawl vessels participating in the rockfish entry level fishery in the Central Regulatory Area of the GOA.

After the effective date of this closure the maximum retainable amounts at § 679.20(e) and (f) and § 679.81(h)(5) apply at any time during a trip.

**Classification**

This action responds to the best available information recently obtained from the fishery. The Assistant Administrator for Fisheries, NOAA (AA), finds good cause to waive the requirement to provide prior notice and opportunity for public comment pursuant to the authority set forth at 5 U.S.C. 553(b)(B) as such requirement is impracticable and contrary to the public interest. This requirement is impracticable and contrary to the public interest as it would prevent NMFS from responding to the most recent fisheries data in a timely fashion and would delay the closure of Pacific ocean perch for vessels participating in the rockfish entry level fishery in the Central Regulatory Area of the GOA. NMFS was unable to publish a notice providing time for public comment because the most recent, relevant data only became available as of August 27, 2010.

The AA also finds good cause to waive the 30–day delay in the effective date of this action under 5 U.S.C. 553(d)(3). This finding is based upon the reasons provided above for waiver of prior notice and opportunity for public comment.

This action is required by § 679.20 and is exempt from review under Executive Order 12866.

**Authority:** 16 U.S.C. 1801 *et seq.*

Dated: August 30, 2010.

**Carrie Selberg,**

*Acting Director, Office of Sustainable Fisheries, National Marine Fisheries Service.*

[FR Doc. 2010–21984 Filed 8–30–10; 4:15 pm]

BILLING CODE 3510–22–S

## DEPARTMENT OF COMMERCE

### National Oceanic and Atmospheric Administration

### 50 CFR Part 679

**[Docket No. 0910131362–0087–02]**

**RIN 0648–XY71**

## Fisheries of the Exclusive Economic Zone Off Alaska; Pelagic Shelf Rockfish for Vessels Participating in the Rockfish Entry Level Fishery in the Central Regulatory Area of the Gulf of Alaska

**AGENCY:** National Marine Fisheries Service (NMFS), National Oceanic and Atmospheric Administration (NOAA), Commerce.

**ACTION:** Temporary rule; closure.

**SUMMARY:** NMFS is prohibiting directed fishing for pelagic shelf rockfish for vessels participating in the rockfish entry level fishery in the Central Regulatory Area of the Gulf of Alaska (GOA). This action is necessary to prevent exceeding the 2010 total allowable catch (TAC) of pelagic shelf rockfish allocated to vessels participating in the rockfish entry level fishery in the Central Regulatory Area of the GOA.

**DATES:** Effective 1200 hrs, Alaska local time (A.l.t.), September 1, 2010, through 2400 hrs, A.l.t., December 31, 2010.

**FOR FURTHER INFORMATION CONTACT:** Steve Whitney, 907–586–7269.

**SUPPLEMENTARY INFORMATION:** NMFS manages the groundfish fishery in the GOA exclusive economic zone according to the Fishery Management Plan for Groundfish of the Gulf of Alaska (FMP) prepared by the North Pacific Fishery Management Council under authority of the Magnuson-Stevens Fishery Conservation and Management Act. Regulations governing fishing by U.S. vessels in accordance with the FMP appear at subpart H of 50 CFR part 600 and 50 CFR part 679.

The TAC of 2010 pelagic shelf rockfish allocated to vessels participating in the entry level rockfish fishery in the Central Regulatory Area of the GOA is 157 metric tons as established by the final 2010 and 2011 harvest specifications for groundfish in the GOA (75 FR 11749, March 12, 2010). Section 679.83(a)(2) allows trawl or longline gear vessels participating in the entry level rockfish fishery to harvest any unused pelagic shelf rockfish after 1200 hrs, A.l.t., September 1, 2010.

As of September 1, 2010, 157 mt remains in the combined entry level longline and entry level trawl allocations of pelagic shelf rockfish. In accordance with § 679.83(a)(3), the Administrator, Alaska Region, NMFS (Regional Administrator), has determined that the remaining 2010 TAC of pelagic shelf rockfish allocated to vessels participating in the entry level longline rockfish and entry level trawl fisheries in the Central Regulatory Area of the GOA is insufficient to support directed fishing. Consequently, NMFS is prohibiting directed fishing for pelagic shelf rockfish for longline and trawl and vessels participating in the rockfish entry level fishery in the Central Regulatory Area of the GOA.

After the effective date of this closure the maximum retainable amounts at § 679.20(e) and (f) and § 679.81(h)(5) apply at any time during a trip.

**Classification**

This action responds to the best available information recently obtained from the fishery. The Assistant Administrator for Fisheries, NOAA (AA), finds good cause to waive the requirement to provide prior notice and opportunity for public comment pursuant to the authority set forth at 5 U.S.C. 553(b)(B) as such requirement is impracticable and contrary to the public interest. This requirement is impracticable and contrary to the public interest as it would prevent NMFS from responding to the most recent fisheries data in a timely fashion and would delay the closure of pelagic shelf rockfish for vessels participating in the rockfish entry level fishery in the Central Regulatory Area of the GOA. NMFS was unable to publish a notice providing time for public comment because the most recent, relevant data only became available as of August 27, 2010.

The AA also finds good cause to waive the 30–day delay in the effective date of this action under 5 U.S.C. 553(d)(3). This finding is based upon the reasons provided above for waiver of prior notice and opportunity for public comment.

This action is required by § 679.20 and is exempt from review under Executive Order 12866.

**Authority:** 16 U.S.C. 1801 *et seq.*

Dated: August 30, 2010.

**Carrie Selberg,**

*Acting Director, Office of Sustainable Fisheries, National Marine Fisheries Service.*

[FR Doc. 2010–21988 Filed 8–30–10; 4:15 pm]

**BILLING CODE 3510–22–S**

## DEPARTMENT OF COMMERCE

## National Oceanic and Atmospheric Administration

## 50 CFR Part 679

**[Docket No. 0910131362–0087–02]**

**RIN 0648–XY72**

## Fisheries of the Exclusive Economic Zone Off Alaska; Northern Rockfish for Vessels Participating in the Rockfish Entry Level Fishery in the Central Regulatory Area of the Gulf of Alaska

**AGENCY:** National Marine Fisheries Service (NMFS), National Oceanic and Atmospheric Administration (NOAA), Commerce.

**ACTION:** Temporary rule; closure.

**SUMMARY:** NMFS is prohibiting directed fishing for northern rockfish for vessels participating in the rockfish entry level fishery in the Central Regulatory Area of the Gulf of Alaska (GOA). This action is necessary to prevent exceeding the 2010 total allowable catch (TAC) of northern rockfish allocated to vessels participating in the rockfish entry level fishery in the Central Regulatory Area of the GOA.

**DATES:** Effective 1200 hrs, Alaska local time (A.l.t.), September 1, 2010, through 2400 hrs, A.l.t., December 31, 2010.

**FOR FURTHER INFORMATION CONTACT:** Steve Whitney, 907–586–7269.

**SUPPLEMENTARY INFORMATION:** NMFS manages the groundfish fishery in the GOA exclusive economic zone according to the Fishery Management Plan for Groundfish of the Gulf of Alaska (FMP) prepared by the North Pacific Fishery Management Council under authority of the Magnuson-Stevens Fishery Conservation and Management Act. Regulations governing fishing by U.S. vessels in accordance with the FMP appear at subpart H of 50 CFR part 600 and 50 CFR part 679.

The 2010 northern rockfish TAC allocated to vessels participating in the entry level rockfish fishery in the Central Regulatory Area of the GOA is 115 metric tons as established by the final 2010 and 2011 harvest specifications (75 FR 11749, March 12, 2010) for groundfish in the GOA. Section 679.83(a)(2) allows trawl or longline gear vessels participating in the entry level rockfish fishery to harvest any unused northern rockfish after 1200 hrs, A.l.t., September 1, 2010.

As of September 1, 2010, 115 mt remains in the entry level longline allocation of northern rockfish. In accordance with § 679.83(a)(3), the Administrator, Alaska Region, NMFS (Regional Administrator), has determined that the remaining 2010 TAC of northern rockfish allocated to vessels participating in the entry level longline rockfish fishery in the Central Regulatory Area of the GOA is insufficient to support directed fishing. Consequently, NMFS is prohibiting directed fishing for northern rockfish for trawl and longline vessels participating in the rockfish entry level fishery in the Central Regulatory Area of the GOA.

After the effective date of this closure the maximum retainable amounts at § 679.20(e) and (f) and § 679.81(h)(5) apply at any time during a trip.

### Classification

This action responds to the best available information recently obtained from the fishery. The Assistant Administrator for Fisheries, NOAA (AA), finds good cause to waive the requirement to provide prior notice and opportunity for public comment pursuant to the authority set forth at 5 U.S.C. 553(b)(B) as such requirement is impracticable and contrary to the public interest. This requirement is impracticable and contrary to the public interest as it would prevent NMFS from responding to the most recent fisheries data in a timely fashion and would delay the closure of northern rockfish for vessels participating in the rockfish entry level fishery in the Central Regulatory Area of the GOA. NMFS was unable to publish a notice providing time for public comment because the most recent, relevant data only became available as of August 27, 2010.

The AA also finds good cause to waive the 30–day delay in the effective date of this action under 5 U.S.C. 553(d)(3). This finding is based upon the reasons provided above for waiver of prior notice and opportunity for public comment.

This action is required by § 679.20 and is exempt from review under Executive Order 12866.

**Authority:** 16 U.S.C. 1801 *et seq.*

Dated: August 30, 2010.

**Carrie Selberg,**

*Acting Director, Office of Sustainable Fisheries, National Marine Fisheries Service.*

[FR Doc. 2010–21990 Filed 8–30–10; 4:15 pm]

**BILLING CODE 3510–22–S**

# Proposed Rules

Federal Register
Vol. 75, No. 170
Thursday, September 2, 2010

This section of the FEDERAL REGISTER contains notices to the public of the proposed issuance of rules and regulations. The purpose of these notices is to give interested persons an opportunity to participate in the rule making prior to the adoption of the final rules.

## DEPARTMENT OF TRANSPORTATION

### Federal Aviation Administration

### 14 CFR Part 71

**[Docket No. FAA–2010–0690; Airspace Docket No. 10–ASW–2]**

## Proposed Establishment of Class E Airspace; Berryville, AR

**AGENCY:** Federal Aviation Administration (FAA), DOT.

**ACTION:** Notice of proposed rulemaking (NPRM).

**SUMMARY:** This action proposes to establish Class E airspace at Berryville, AR. Controlled airspace is necessary to accommodate new Standard Instrument Approach Procedures (SIAP) at Carroll County Airport. The FAA is taking this action to enhance the safety and management of Instrument Flight Rules (IFR) operations for SIAPs at the airport.

**DATES:** Comments must be received on or before October 18, 2010.

**ADDRESSES:** Send comments on this proposal to the U.S. Department of Transportation, Docket Operations, 1200 New Jersey Avenue, SE., West Building Ground Floor, Room W12–140, Washington, DC 20590–0001. You must identify the docket number FAA–2010–0690/Airspace Docket No. 10–ASW–2, at the beginning of your comments. You may also submit comments through the Internet at *http://www.regulations.gov*. You may review the public docket containing the proposal, any comments received, and any final disposition in person in the Dockets Office between 9 a.m. and 5 p.m., Monday through Friday, except Federal holidays. The Docket Office (telephone 1–800–647–5527), is on the ground floor of the building at the above address.

**FOR FURTHER INFORMATION CONTACT:** Scott Enander, Central Service Center, Operations Support Group, Federal Aviation Administration, Southwest Region, 2601 Meacham Blvd., Fort Worth, TX 76137; telephone: (817) 321–7716.

**SUPPLEMENTARY INFORMATION:**

### Comments Invited

Interested parties are invited to participate in this proposed rulemaking by submitting such written data, views, or arguments, as they may desire. Comments that provide the factual basis supporting the views and suggestions presented are particularly helpful in developing reasoned regulatory decisions on the proposal. Comments are specifically invited on the overall regulatory, aeronautical, economic, environmental, and energy-related aspects of the proposal. Communications should identify both docket numbers and be submitted in triplicate to the address listed above. Commenters wishing the FAA to acknowledge receipt of their comments on this notice must submit with those comments a self-addressed, stamped postcard on which the following statement is made: "Comments to Docket No. FAA–2010–0690/Airspace Docket No. 10–ASW–2." The postcard will be date/time stamped and returned to the commenter.

### Availability of NPRMs

An electronic copy of this document may be downloaded through the Internet at *http://www.regulations.gov*. Recently published rulemaking documents can also be accessed through the FAA's Web page at *http://www.faa.gov/airports_airtraffic/air_traffic/publications/airspace_amendments/*.

You may review the public docket containing the proposal, any comments received and any final disposition in person in the Dockets Office (see **ADDRESSES** section for address and phone number) between 9 a.m. and 5 p.m., Monday through Friday, except Federal holidays. An informal docket may also be examined during normal business hours at the office of the Central Service Center, 2601 Meacham Blvd., Fort Worth, TX 76137.

Persons interested in being placed on a mailing list for future NPRMs should contact the FAA's Office of Rulemaking (202) 267–9677, to request a copy of Advisory Circular No. 11–2A, Notice of Proposed Rulemaking Distribution System, which describes the application procedure.

### The Proposal

This action proposes to amend Title 14, Code of Federal Regulations (14 CFR), Part 71 by establishing Class E airspace extending upward from 700 feet above the surface for SIAPs operations at Carroll County Airport, Berryville, AR. Controlled airspace is needed for the safety and management of IFR operations at the airport.

Class E airspace areas are published in Paragraph 6005 of FAA Order 7400.9T, signed August 27, 2009 and effective September 15, 2009, which is incorporated by reference in 14 CFR 71.1. The Class E airspace designation listed in this document would be published subsequently in the Order.

The FAA has determined that this proposed regulation only involves an established body of technical regulations for which frequent and routine amendments are necessary to keep them operationally current. It, therefore, (1) is not a "significant regulatory action" under Executive Order 12866; (2) is not a "significant rule" under DOT Regulatory Policies and Procedures (44 FR 11034; February 26, 1979); and (3) does not warrant preparation of a Regulatory Evaluation as the anticipated impact is so minimal. Since this is a routine matter that will only affect air traffic procedures and air navigation, it is certified that this rule, when promulgated, will not have a significant economic impact on a substantial number of small entities under the criteria of the Regulatory Flexibility Act.

The FAA's authority to issue rules regarding aviation safety is found in Title 49 of the U.S. Code. Subtitle 1, Section 106 describes the authority of the FAA Administrator. Subtitle VII, Aviation Programs, describes in more detail the scope of the agency's authority. This rulemaking is promulgated under the authority described in Subtitle VII, Part A, Subpart I, Section 40103. Under that section, the FAA is charged with prescribing regulations to assign the use of airspace necessary to ensure the safety of aircraft and the efficient use of airspace. This regulation is within the scope of that authority as it would establish controlled airspace at Carroll County Airport, Berryville, AR.

**List of Subjects in 14 CFR Part 71**

Airspace, Incorporation by reference, Navigation (air).

**The Proposed Amendment**

In consideration of the foregoing, the Federal Aviation Administration proposes to amend 14 CFR part 71 as follows:

## PART 71—DESIGNATION OF CLASS A, B, C, D, AND E AIRSPACE AREAS; AIR TRAFFIC SERVICE ROUTES; AND REPORTING POINTS

1. The authority citation for part 71 continues to read as follows:

**Authority:** 49 U.S.C. 106(g); 40103, 40113, 40120; E.O. 10854, 24 FR 9565, 3 CFR, 1959–1963 Comp., p. 389.

**§ 71.1 [Amended]**

2. The incorporation by reference in 14 CFR 71.1 of FAA Order 7400.9T, Airspace Designations and Reporting Points, signed August 27, 2009, and effective September 15, 2009, is amended as follows:

*Paragraph 6005 Class E Airspace areas extending upward from 700 feet or more above the surface of the earth.*

* * * * *

**ASW AR E5 Berryville, AR [New]**

Carroll County Airport, AR
(Lat. 36°22′53″ N., long. 93°37′28″ W.)

That airspace extending upward from 700 feet above the surface within a 8.9-mile radius of Carroll County Airport and within 4 miles each side of the 253° bearing from the airport extending from the 8.9-mile radius to 11.3 miles west of the airport.

Issued in Fort Worth, TX, on August 18, 2010.

**Richard J. Kervin,**

*Acting Manager, Operations Support Group, ATO Central Service Center.*

[FR Doc. 2010–21937 Filed 9–1–10; 8:45 am]

BILLING CODE 4901–13–P

## DEPARTMENT OF THE TREASURY

## Alcohol and Tobacco Tax and Trade Bureau

## 27 CFR Part 9

**[Docket No. TTB–2010–0005; Notice No. 108]**

**RIN 1513–AB55**

## Proposed Establishment of the Antelope Valley of the California High Desert Viticultural Area

**AGENCY:** Alcohol and Tobacco Tax and Trade Bureau, Treasury.

**ACTION:** Notice of proposed rulemaking.

**SUMMARY:** The Alcohol and Tobacco Tax and Trade Bureau proposes to establish the 665-square mile "Antelope Valley of the California High Desert" viticultural area in Los Angeles and Kern Counties, California. We designate viticultural areas to allow vintners to better describe the origin of their wines and to allow consumers to better identify wines they may purchase. We invite comments on this proposed addition to our regulations.

**DATES:** We must receive written comments on or before November 1, 2010.

**ADDRESSES:** You may send comments on this notice to one of the following addresses:

- *http://www.regulations.gov* (Federal e-rulemaking portal; follow the instructions for submitting comments);
- *U.S. Mail:* Director, Regulations and Rulings Division, Alcohol and Tobacco Tax and Trade Bureau, P.O. Box 14412, Washington, DC 20044–4412; or
- *Hand Delivery/Courier in Lieu of Mail:* Alcohol and Tobacco Tax and Trade Bureau, 1310 G Street, NW., Suite 200–E, Washington, DC 20005.

See the Public Participation section of this notice for specific instructions and requirements for submitting comments, and for information on how to request a public hearing.

You may view copies of this notice, selected supporting materials, and any comments we receive about this proposal at *http://www.regulations.gov* within Docket No. TTB–2010–0005. A direct link to this docket is posted on the TTB Web site at *http://www.ttb.gov/wine/wine_rulemaking.shtml* under Notice No. 108. You also may view copies of this notice, all related petitions, maps or other supporting materials, and any comments we receive about this proposal by appointment at the TTB Information Resource Center, 1310 G Street, NW., Washington, DC 20220. Please call 202–453–2270 to make an appointment.

**FOR FURTHER INFORMATION CONTACT:** N.A. Sutton, Regulations and Rulings Division, Alcohol and Tobacco Tax and Trade Bureau, 925 Lakeville St., No. 158, Petaluma, CA 94952; telephone 415–271–1254.

**SUPPLEMENTARY INFORMATION:**

### Background on Viticultural Areas

*TTB Authority*

Section 105(e) of the Federal Alcohol Administration Act (FAA Act), 27 U.S.C. 205(e), authorizes the Secretary of the Treasury to prescribe regulations for the labeling of wine, distilled spirits, and malt beverages. The FAA Act requires that these regulations, among other things, prohibit consumer deception and the use of misleading statements on labels, and ensure that labels provide the consumer with adequate information as to the identity and quality of the product. The Alcohol and Tobacco Tax and Trade Bureau (TTB) administers the regulations promulgated under the FAA Act.

Part 4 of the TTB regulations (27 CFR part 4) allows the establishment of definitive viticultural areas and the use of their names as appellations of origin on wine labels and in wine advertisements. Part 9 of the TTB regulations (27 CFR part 9) contains the list of approved viticultural areas.

*Definition*

Section 4.25(e)(1)(i) of the TTB regulations (27 CFR 4.25(e)(1)(i)) defines a viticultural area for American wine as a delimited grape-growing region distinguishable by geographical features, the boundaries of which have been recognized and defined in part 9 of the regulations. These designations allow vintners and consumers to attribute a given quality, reputation, or other characteristic of a wine made from grapes grown in an area to its geographic origin. The establishment of viticultural areas allows vintners to describe more accurately the origin of their wines to consumers and helps consumers to identify wines they may purchase. Establishment of a viticultural area is neither an approval nor an endorsement by TTB of the wine produced in that area.

*Requirements*

Section 4.25(e)(2) of the TTB regulations outlines the procedure for proposing an American viticultural area and provides that any interested party may petition TTB to establish a grape-growing region as a viticultural area. Section 9.3(b) of the TTB regulations requires the petition to include—

- Evidence that the proposed viticultural area is locally and/or nationally known by the name specified in the petition;
- Historical or current evidence that supports setting the boundary of the proposed viticultural area as the petition specifies;
- Evidence relating to the geographic features, such as climate, soils, elevation, and physical features, that distinguish the proposed viticultural area from surrounding areas;
- A description of the specific boundary of the proposed viticultural area, based on features found on United States Geological Survey (USGS) maps; and

• A copy of the appropriate USGS map(s) with the proposed viticultural area's boundary prominently marked.

**Antelope Valley of the California High Desert Petition**

Mr. Ralph Jens Carter, on behalf of the Antelope Valley Winegrowers Association, proposes to establish the Antelope Valley of the California High Desert viticultural area. The proposed viticultural area covers 665 square miles, and lies in inland southern California, approximately 50 miles north of the Los Angeles metropolitan area. TTB notes that the proposed viticultural area is not within, does not contain, and does not overlap any existing or currently proposed viticultural area. In 2007, the proposed viticultural area included 128 planted acres in 16 commercial vineyards, and 2 bonded wineries, according to a listing in the petition exhibits.

The distinguishing features of the proposed Antelope Valley of the California High Desert viticultural area are climate, geology, geography, and soils, according to the petition. The Antelope Valley is surrounded by mountains on three sides and by a desert on the other side; it has an arid climate, desert soils, and a valley geomorphology.

*History of Agriculture and Viticulture in the Antelope Valley*

For an estimated 11,000 years, various cultures have populated the Antelope Valley region, according to the petitioner. Native American tribes, traveling north from what is now Arizona and New Mexico, used the valley as a trade route.

In the 1880s and early 1890s, Antelope Valley had ample rainfall and available surface water for farming. When settlers needed irrigation for farming, they initially used water from mountain streams, but eventually they dug wells into underground water reservoirs.

The petition states that early viticulture in the Antelope Valley area consisted of two growers in Lancaster ("Directory of the Grape Growers and Winemakers in California," Compiled by Clarence J. Wetmore, Secretary of the Board of State Viticulture Commissioners, 1888). By 1893, viticulture in the area grew to 239 acres of vines, 6.5 acres of wine grapes, and 8 growers ("Vineyards of Southern California," E.C. Bichowsky, California Board of State Viticultural Commissioners, 1893).

A drought in 1894 and Prohibition (1919–1933) ended viticulture in Antelope Valley, according to the petition. However, in the early 20th century water supplies for general farming in the valley became dependable as gasoline engines and electric pumps came into use. In 1913, the Los Angeles Aqueduct, extending from Owens Valley in southeastern California to Los Angeles, was built. Bordering the north side of Antelope Valley, it also helped revive the agricultural economy in the valley. Viticulture restarted in 1981, when Steve Godde planted 5 acres to grapevines on the west side of the valley.

*Name Evidence*

The name "Antelope Valley of the California High Desert" combines the name recognition of the valley and the California high desert area into a single geographic descriptor, according to the petitioner. The modifier "California High Desert" distinguishes the proposed viticultural area from other places in California and elsewhere also called "Antelope Valley;" it is commonly used by area inhabitants to distinguish and identify the Antelope Valley located in the high desert in southeastern California. According to the Geographic Names Information System (GNIS) maintained by the USGS, the "Antelope Valley" name identifies 35 geographical locations in 10 States, including 9 locations in California.

The petition contains several documents and citations that refer to the "Antelope Valley" in Los Angeles and Kern Counties, as follows: The USGS 1974 photorevised Little Buttes Quadrangle; the 1977 Geologic Map of California, compiled by Charles W. Jennings; the 2005 DeLorme Southern and Central California Atlas and Gazetteer; the California Air Resources Board Web site; and the 2001 California State Automobile Association (CSAA) Coast and Valley edition. The petition also includes excerpts of the 2006 Antelope Valley AT&T telephone directory listing more than 80 entities—businesses, churches, and health care providers, a college, a high school district, and a chamber of commerce—with "Antelope Valley" in their names.

References to the "High Desert" in the proposed viticultural area name include an excerpt from the 2006 Antelope Valley AT&T telephone directory, according to the petition. The telephone directory lists 25 entities in the subject Antelope Valley area—businesses, health care providers, a school, a church, and a hospital—with "High Desert" in their names.

Also of relevance, Antelope Valley is described as "Medium to high desert of California and southern Nevada" in the "Sunset Western Garden Book" (Kathleen Norris Brenzel, editor, eighth edition, January 2007, Sunset Publishing Corporation, Menlo Park, California), which is discussed in more detail below.

*Boundary Evidence*

The Antelope Valley region is a wedge-shaped portion of the western Mojave Desert, according the petitioner. The north and west sides of the wedge border the Tehachapi Mountains; the south side, the San Gabriel Mountains, the Sierra Pelona Mountains, and Portal Ridge. The east side is an open continuation of the Mojave Desert.

The boundary line for the proposed Antelope Valley of the California High Desert viticultural area defines an area in the greater Antelope Valley region. The proposed viticultural area has similar climate, geology, geography, and soils. These geographical features are distinct from the areas outside of the proposed viticultural area.

The proposed north boundary line is defined by a portion of the Los Angeles Aqueduct, streets, elevation lines, a trail, the southwest perimeter of the Edwards Air Force Base (AFB), and a series of stairstep section lines. The proposed east boundary line is defined by a section line. The proposed south boundary line is defined by elevation lines and a portion of the California Aqueduct system, which runs along the foothills of the surrounding mountains. The proposed west boundary line is defined by a portion of the Los Angeles Aqueduct. No part of Edwards AFB lies within the proposed viticultural area.

*Distinguishing Features*

The distinguishing features of the proposed Antelope Valley of the California High Desert viticultural area include climate, geology, geography, and soils, according to the petition.

Climate

The petition states that, in most years, summers in the Antelope Valley are hot and dry and winters are relatively cold (Soil Survey of the Antelope Valley Area, California, 1970, U.S. Department of Agriculture, Soil Conservation Service, in cooperation with the University of California Agricultural Experiment Station). Annual precipitation in the valley ranges from 4 to 9 inches, with little or no snow. The growing season is 240 to 260 days long. The table below summarizes the climate data presented in the petition for the Antelope Valley and the surrounding areas. The data are discussed in the text below.

ANNUAL PRECIPITATION, GROWING SEASON LENGTH, WINTER LOW TEMPERATURES, SUNSET CLIMATE ZONE, AND WINKLER CLIMATE REGION FOR ANTELOPE VALLEY AND THE SURROUNDING AREAS

| Location | Antelope Valley | North | East | Southeast | South central | Southwest | West |
|---|---|---|---|---|---|---|---|
| | Within | Tehachapi Mountains | Victorville and Edwards AFB | San Gabriel Mountains transitioning to higher elevations | San Gabriel Mountains, lower elevations | San Gabriel Mountains, higher elevations | Sandberg |
| Annual precipitation (in.). | 4–9 | 12–20 | 1.4–5 | 10–20 | 10–20 | 9–20 | 14–16 |
| Growing season (days). | 240–260 | 50–100 | 215–235 | 170–190 | 220–240 | 100–150 | 50–100 |
| Sunset climate zone *. | 11 | 1A | 10 | 7 | 18 | 2A | 1A |
| Winkler region/degree days **. | V (4,600) | No Data | V (4,900) | No Data | No Data | No Data | III (3,370) |

* See the "Sunset Western Garden Book" (Brenzel), discussed below.
** See "General Viticulture" (Winkler), discussed below.

Hot summers, cold winters, and widely varying daily temperatures characterize the climate in the Antelope Valley, according to the petition. On average, 110 days a year have high temperatures above 90 degrees F, but nights are mild. The growing season extends from mid-March to early November. Winter low temperatures range from 6 to 11 degrees F.

In the mountainous areas to the south, west, and north of the Antelope Valley, summers are cool and winters are cold, according to the petition. To the west, in addition to the mountainous region, are areas of lower elevation terrain with a longer and warmer growing season conducive to successful viticulture. Annual precipitation is 9 to 20 inches, significantly more than the 4 to 9 inches of precipitation in the valley; consequently, it increases the groundwater supply in the valley. The growing season in the mountains ranges from 50 to 240 days, but in the proposed viticultural area is 240 to 260 days.

Northeast of the proposed viticultural area lies Edwards AFB, for which climate data related to agriculture or viticulture is limited, according to the petition. To the southeast, in an Antelope Valley-Mojave Desert transition zone, summers are hot; winters are mild with neither severe cold nor high humidity. The growing season of this transition zone is 170 to 190 days—shorter than that in the Antelope Valley.

There are 24 climate zones within the continental western United States, according to the "Sunset Western Garden Book" (Brenzel). Sunset climate zones are based on factors such as winter minimum temperatures, summer high temperatures, length of the growing season, humidity, and rainfall patterns. These factors are determined by latitude, elevation, ocean proximity and influence, continental air, hills and mountains, and local terrain. Sunset climate zone 1 is the harshest cold weather, and Sunset climate zone 24, the mildest.

The Antelope Valley lies in Sunset climate zone 11, "Medium to high desert of California and southern Nevada," according to the petition. Areas 11 miles or less to the north, west, and south of the Antelope Valley are in different Sunset climate zones. The Tehachapi Mountains, to the north, and Sandberg, to the west, are in Sunset climate zone 1A, "Coldest mountains and intermountain areas throughout the contiguous states and southern British Columbia." Winter low temperatures are 0 to 11 degrees F. The growing season in this zone generally lasts from end of May to the first part of September, and summers are mild. To the south, in the higher elevations of the San Gabriel Mountains, lies Sunset climate zone 2A, "Cold Mountain and Inter-Mountain" Areas." Winter low temperatures are 10 to 20 degrees F.

In the lower-elevation areas of the San Gabriel Mountains south of the Antelope Valley lies Sunset climate zone 18, "Above and below the thermal belts in Southern California's interior valleys." The growing season can extend from the end of March to late November. Winter low temperatures average between 7 and 22 degrees F. This area is an intermediate zone where the Antelope Valley transitions to the part of the San Gabriel Mountains in Sunset climate zone 2A.

Southeast of the Antelope Valley, where the San Gabriel Mountains transition to higher elevations, lies Sunset climate zone 7, "California's Gray Pine Belt." The growing season, from late April to early October, extends from 170 to 190 days. Summers are hot, and winters are mild. Winter low temperatures average between 26 to 35 degrees F.

The area to the east of the Antelope Valley, near Victorville and Edwards AFB, lies in Sunset climate zone 10, "High desert areas of Arizona and New Mexico." This zone includes the part of the Mojave Desert near the California-Nevada border. The growing season, early April to November, averages 225 days. Winter low temperatures average between 22 to 25 degrees F.

The Winkler climate classification system uses heat accumulation during the growing season to define climatic regions for viticulture ("General Viticulture," by Albert J. Winkler, University of California Press, 1974, pp. 61–64). As a measurement of heat accumulation during the growing season, 1 degree day accumulates for each degree Fahrenheit that a day's mean temperature is above 50 degrees, the minimum temperature required for grapevine growth. Climatic region I has less than 2,500 growing degree days per year; region II, 2,501 to 3,000; region III, 3,001 to 3,500; region IV, 3,501 to 4,000; and region V, 4,001 or more.

The proposed Antelope Valley of the California High Desert viticultural area has an annual average heat accumulation of 4,600 degree days and therefore is in Winkler climate region V, according to the petition. The areas to the east, also in Winkler region V, have a greater annual heat accumulation (4,900 degree days) but a shorter growing season (215 to 235 days) compared to the proposed viticultural area. Sandberg, to the west of the Antelope Valley, is in Winkler region III. Most mountainous areas surrounding the Antelope Valley are not assigned to a Winkler climate region because they are too cold to support commercial viticulture.

## Geology

Geology has influenced the topography of the Antelope Valley, the

surrounding mountains, and the neighboring desert, according to the petition. The distinguishing geologic features of the proposed viticultural area are valley fill, alluvial soils, diverging fault lines, and relatively young rocks.

The topography of the Mojave Desert of California, of which the Antelope Valley is a part, varies from fault scarps and playas to surrounding hills and mountains. Valley fill is thickest in the Antelope Valley, in the westernmost part of the Mojave Desert.

The Antelope Valley region is a geologically old basin that more recent alluvium has filled. Intermittent and ephemeral streams drain into two playas within the basin: Rosamond and Rogers Dry Lakes (U.S. Department of Agriculture, Soil Conservation Service). The valley landform resulted from a depression at the intersection of diverging fault lines from branches of the Garlock and San Andreas Faults. The valley's steep vertical relief evolved from a strike slip on the San Andreas Fault or an associated, branching fault.

The relatively young age of the alluvial fill within the proposed viticultural area contrasts with the age of rocks in the surrounding areas, according to the petition. The rocks in the Antelope Valley region date primarily to the Cenozoic Era (65.5 million years ago to recent). The alluvial fill is Quaternary (2 million years ago to recent). Surrounding the Antelope Valley region, the rocks generally date to the Cretaceous Period (65 to 136 million years ago), the Jurassic Period (136 to 190 million years ago), and the Triassic Period (190 to 225 million years ago).

Plutonic rocks are predominant in the mountainous areas surrounding the proposed viticultural area boundary line. They include crystalline, granite, quartz diorite, quartz monzonite, and granodiorite. These rocks, the granite and diorite granite rocks in particular, weathered to form mainly consolidated and unconsolidated, mostly nonmarine alluvium on the valley floor. However, Oso Canyon, at the western tip of the valley, is a sedimentary bed dating to the Miocene epoch (about 23 to 5 million years ago).

Geography

The terrain of the proposed Antelope Valley of the California High Desert viticultural area is characterized by significant uniformity and continuity, according to the petition. Slopes are level or nearly level on the valley floor, but range to gently sloping to moderately sloping on rises at the upper elevations of the terraces and alluvial fans. And, although the proposed viticultural area is approximately 52 miles wide, elevation varies only 838 feet, as shown on the USGS maps. The elevation of the surrounding mountains varies from that of the valley by approximately 450 to 4,900 feet, as shown on the USGS maps and the table below.

ELEVATION OF LOCATIONS IN THE ANTELOPE VALLEY AND SURROUNDING AREAS

| Location | Area | Distance from proposed viticultural area (mi.) | Direction from proposed viticultural area | Elevation (feet) |
|---|---|---|---|---|
| Antelope Valley | Greater Antelope Valley region | 0 | Within | 2,300 to 3,100. |
| Double Mountain | Tehachapi Mountains | 10.5 | North | 7,981. |
| Soledad Mountain | Rosamond Hills | 2 | North | 4,500. |
| Silver Peak | Shadow Mountains | 16 | East | 4,043. |
| Burnt Peak | Liebre Mountains | 6 | South | 5,888. |
| Mount McDill | Sierra Pelona Range | 6.25 | South | 5,187. |
| Pine Peak | Liebre Mountains | 2.25 | West | 3,555. |

Soils

The proposed Antelope Valley of the California High Desert viticultural area lies on the western rim of an old alluvial basin with interior drainage by intermittent and ephemeral streams (U.S. Department of Agriculture, Soil Conservation Service). The proposed boundary line closely follows the highest elevations of the alluvial fans and terraces of the basin.

The soils in the Antelope Valley formed in alluvium weathered from granite and other rocks in the surrounding mountains, according to the petition. They are very deep loamy fine sand to loam and silty clay. The soils are well drained and well aerated in the root zone. They are mineral rich, and fertility is low to moderate. The available water capacity ranges from 5 to 12 inches.

The predominant soils in the proposed viticultural area are the Hesperia-Rosamond-Cajon, Adelanto, Arizo, and Hanford-Ramona-Greenfield associations. These soils formed in alluvium derived from granitic rock on alluvial fans and terraces. Generally, they vary in drainage, slope, elevation, and natural vegetation.

The Hesperia-Rosamond-Cajon association consists of moderately well drained to excessively drained soils on 0 to 15 percent slopes. Elevations range from 2,400 to 2,900 feet. Natural vegetation includes annual grasses, forbs [wild flowers], Joshua tree, Mormon tea, rabbit brush, and large sagebrush.

The Adelanto association consists of well drained soils on 0 to 5 percent slopes. Elevations range from 2,450 to 2,800 feet. Natural vegetation consists of annual grasses and forbs and in some areas desert stipa, sagebrush, creosote bush, Joshua tree, and juniper.

The Arizo association consists of excessively well drained soils on 0 to 5 percent slopes. Elevations range from 2,950 to 3,100 feet. Natural vegetation includes annual grasses, forbs, creosote bush, Mormon tea, and rabbit brush.

The Hanford-Ramona-Greenfield association consists of well drained soils on 0 to 30 percent slopes. Elevations range from 2,600 to 3,900 feet. Natural vegetation includes annual grasses and forbs and, in scattered areas, juniper.

Unlike the soils in the Antelope Valley, the soils on the surrounding uplands are generally shallow, excessively well drained, coarse sandy loam, and available water capacity is 1.5 to 7 inches. Included with the soils in the Antelope Valley are saline soils in small, scattered areas within the proposed viticultural area. Outside the proposed viticultural area, near Rosamond and Rogers Lakes, saline soils appear as larger areas. TTB notes that saline soils are not suitable for agriculture, including viticulture.

**TTB Determination**

TTB concludes that the petition to establish the 665-square mile "Antelope Valley of the California High Desert" viticultural area merits consideration

and public comment, as invited in this notice.

*Boundary Description*

See the narrative boundary description of the petitioned-for viticultural area in the proposed regulatory text published at the end of this notice.

*Maps*

The petitioner provided the required maps, and we list them below in the proposed regulatory text.

**Impact on Current Wine Labels**

Part 4 of the TTB regulations prohibits any label reference on a wine that indicates or implies an origin other than the wine's true place of origin. If we establish this proposed viticultural area, its name, "Antelope Valley of the California High Desert," will be recognized as a name of viticultural significance under 27 CFR 4.39(i)(3). The text of the proposed regulation clarifies this point.

Therefore, the proposed part 9 regulatory text set forth in this document specifies "Antelope Valley of the California High Desert" as terms of viticultural significance for purposes of part 4 of the TTB regulations. If this proposed regulatory text is adopted as a final rule, wine bottlers using "Antelope Valley of the California High Desert" in a brand name, including a trademark, or in another label reference as to the origin of the wine, will have to ensure that the product is eligible to use "Antelope Valley of the California High Desert" as an appellation of origin.

For a wine to be labeled with a viticultural area name or with a brand name that includes a viticultural area name or other term identified as being viticulturally significant in part 9 of the TTB regulations, at least 85 percent of the wine must be derived from grapes grown within the area represented by that name or other term, and the wine must meet the other conditions listed in 27 CFR 4.25(e)(3). If the wine is not eligible for labeling with the viticultural area name or other viticulturally significant term and that name or term appears in the brand name, then the label is not in compliance and the bottler must change the brand name and obtain approval of a new label. Similarly, if the viticultural area name or other term of viticultural significance appears in another reference on the label in a misleading manner, the bottler would have to obtain approval of a new label. Accordingly, if a previously approved label uses the name "Antelope Valley of the California High Desert" for a wine that does not meet the 85 percent standard, the previously approved label will be subject to revocation upon the effective date of the approval of the Antelope Valley of the California High Desert viticultural area.

Different rules apply if a wine has a brand name containing a viticultural area name or other viticulturally significant term that was used as a brand name on a label approved before July 7, 1986. See 27 CFR 4.39(i)(2) for details.

**Public Participation**

*Comments Invited*

We invite comments from interested members of the public on whether we should establish the proposed Antelope Valley of the California High Desert viticultural area. We are interested in receiving comments on the sufficiency and accuracy of the name, boundary, climate, soils, and other required information submitted in support of the petition. Please provide any available specific information in support of your comments.

Because of the potential impact of the establishment of the proposed Antelope Valley of the California High Desert viticultural area on wine labels that include the name "Antelope Valley of the California High Desert" as discussed above under Impact on Current Wine Labels, we are particularly interested in comments regarding whether there will be a conflict between this name and currently used brand names. If a commenter believes that a conflict will arise, the comment should describe the nature of that conflict, including any negative economic impact that approval of the proposed viticultural area will have on an existing viticultural enterprise. We are also interested in receiving suggestions for ways to avoid any conflicts, for example, by adopting a modified or different name for the viticultural area.

*Submitting Comments*

You may submit comments on this notice by using one of the following three methods:

- *Federal e-Rulemaking Portal:* You may send comments via the online comment form posted with this notice in Docket No. TTB–2010–0005 on "Regulations.gov," the Federal e-rulemaking portal, at *http://www.regulations.gov.* A direct link to that docket is available under Notice No. 108 on the TTB Web site at *http://www.ttb.gov/wine/wine_rulemaking.shtml.* Supplemental files may be attached to comments submitted via Regulations.gov. For complete instructions on how to use Regulations.gov, visit the site and click on "User Guide" under "How to Use this Site."
- *U.S. Mail:* You may send comments via postal mail to the Director, Regulations and Rulings Division, Alcohol and Tobacco Tax and Trade Bureau, P.O. Box 14412, Washington, DC 20044–4412.
- *Hand Delivery/Courier:* You may hand-carry your comments or have them hand-carried to the Alcohol and Tobacco Tax and Trade Bureau, 1310 G Street, NW., Suite 200–E, Washington, DC 20005.

Please submit your comments by the closing date shown above in this notice. Your comments must reference Notice No. 108 and include your name and mailing address. Your comments also must be made in English, be legible, and be written in language acceptable for public disclosure. We do not acknowledge receipt of comments, and we consider all comments as originals.

If you are commenting on behalf of an association, business, or other entity, your comment must include the entity's name as well as your name and position title. If you comment via *http://www.regulations.gov,* please enter the entity's name in the "Organization" blank of the comment form. If you comment via mail, please submit your entity's comment on letterhead.

You may also write to the Administrator before the comment closing date to ask for a public hearing. The Administrator reserves the right to determine whether to hold a public hearing.

*Confidentiality*

All submitted comments and attachments are part of the public record and subject to disclosure. Do not enclose any material in your comments that you consider to be confidential or inappropriate for public disclosure.

*Public Disclosure*

On the Federal e-rulemaking portal, Regulations.gov, we will post, and you may view, copies of this notice, selected supporting materials, and any electronic or mailed comments we receive about this proposal. A direct link to the Regulations.gov docket containing this notice and the posted comments received on it is available on the TTB Web site at *http://www.ttb.gov/wine/wine_rulemaking.shtml* under Notice No. 108. You may also reach the docket containing this notice and the posted comments received on it through the Regulations.gov search page at *http://www.regulations.gov.*

All posted comments will display the commenter's name, organization (if

any), city, and State, and, in the case of mailed comments, all address information, including e-mail addresses. We may omit voluminous attachments or material that we consider unsuitable for posting.

You also may view copies of this notice, all related petitions, maps and other supporting materials, and any electronic or mailed comments we receive about this proposal by appointment at the TTB Information Resource Center, 1310 G Street, NW., Washington, DC 20220. You may also obtain copies at 20 cents per 8.5- x 11-inch page. Contact our information specialist at the above address or by telephone at 202–453–2270 to schedule an appointment or to request copies of comments or other materials.

**Regulatory Flexibility Act**

We certify that this proposed regulation, if adopted, would not have a significant economic impact on a substantial number of small entities. The proposed regulation imposes no new reporting, recordkeeping, or other administrative requirement. Any benefit derived from the use of a viticultural area name would be the result of a proprietor's efforts and consumer acceptance of wines from that area. Therefore, no regulatory flexibility analysis is required.

**Executive Order 12866**

This proposed rule is not a significant regulatory action as defined by Executive Order 12866. Therefore, it requires no regulatory assessment.

**Drafting Information**

N.A. Sutton of the Regulations and Rulings Division drafted this notice.

**List of Subjects in 27 CFR Part 9**

Wine.

**Proposed Regulatory Amendment**

For the reasons discussed in the preamble, we propose to amend title 27, chapter I, part 9, Code of Federal Regulations, as follows:

## PART 9—AMERICAN VITICULTURAL AREAS

1. The authority citation for part 9 continues to read as follows:

**Authority:** 27 U.S.C. 205.

## Subpart C—Approved American Viticultural Areas

2. Subpart C is amended by adding § 9.____ to read as follows:

**§ 9.____ Antelope Valley of the California High Desert.**

(a) *Name.* The name of the viticultural area described in this section is "Antelope Valley of the California High Desert". For purposes of part 4 of this chapter, "Antelope Valley of the California High Desert" is a term of viticultural significance.

(b) *Approved maps.* The 20 United States Geological Survey 1:24,000 scale topographic maps used to determine the boundary of the Antelope Valley of the California High Desert viticultural area are titled:

(1) Rosamond Quadrangle, California, 1973;

(2) Rosamond Lake Quadrangle, California, 1973;

(3) Redman Quadrangle, California, 1992;

(4) Rogers Lake South Quadrangle, California, 1992;

(5) Alpine Butte Quadrangle, California-Los Angeles Co., 1992;

(6) Hi Vista Quadrangle, California-Los Angeles Co., 1957, revised 1992;

(7) Lovejoy Buttes Quadrangle, California-Los Angeles Co., 1957, revised 1992;

(8) El Mirage Quadrangle, California, 1956, revised 1992;

(9) Littlerock Quadrangle, California-Los Angeles Co., 1957, revised 1992;

(10) Palmdale Quadrangle, California-Los Angeles Co., 1958, photorevised 1974;

(11) Ritter Ridge Quadrangle, California-Los Angeles Co., 1958, photorevised 1974;

(12) Lancaster West Quadrangle, California-Los Angeles Co., 1958, photorevised 1974;

(13) Del Sur Quadrangle, California-Los Angeles Co., 1995;

(14) Lake Hughes Quadrangle, California-Los Angeles Co., 1995;

(15) Fairmont Butte Quadrangle, California, 1995;

(16) Neenach School Quadrangle, California, 1995;

(17) Tylerhorse Canyon Quadrangle, California-Kern Co., 1995;

(18) Willow Springs Quadrangle, California-Kern Co., 1965, photorevised 1974;

(19) Little Buttes Quadrangle, California, 1965, photorevised 1974; and

(20) Soledad Mtn. Quadrangle, California-Kern Co., 1973.

(c) *Boundary.* The Antelope Valley of the California High Desert viticultural area is located in Los Angeles and Kern Counties, California. The boundary of the Antelope Valley of the California High Desert viticultural area is as described below:

(1) The beginning point is on the Rosamond map at the intersection of the Kern and Los Angeles Counties boundary line and the Edwards Air Force Base (AFB), boundary line, T8N, R12W. From the beginning point, proceed south along the Edwards AFB boundary line to BM 2297, T8N, R12W; then

(2) Proceed generally east along the Edwards AFB boundary line, crossing over the Rosamond Lake and Redman maps onto the Rogers Lake South map, to the 2,500-foot elevation line along the section 30 north boundary line, T8N, R9W; then

(3) Proceed southwest along the 2,500-foot elevation line, crossing over the Redman map onto the Alpine Butte map, where the elevation line changes to a southeast direction, and continues onto the Hi Vista map to the line's intersection with J Avenue, T7N, R9W; then

(4) Proceed straight east along J Avenue 0.2 mile to the intersection of the section 20 northeast corner and 160th St. E, T7N, R9W; then

(5) Proceed straight south along 160th St. E to the section 33 northwest corner, T7N, R9W; then

(6) Proceed in a clockwise direction along the section 33 north and east boundary lines to the section 3 northwest corner at the marked 2,585-foot elevation point, T6N, R9W; then

(7) Proceed in a clockwise direction along the section 3 north and east boundary lines to the section 11 northwest corner, T6N, R9W; then

(8) Proceed in a clockwise direction along the section 11 north and east boundary lines, crossing onto the Lovejoy Buttes map, to the section 13 northwest corner, T6N, R9W; then

(9) Proceed in a clockwise direction along the section 13 north and east boundary lines, continuing south to the section 30 northwest corner, T6N, R8W; then

(10) Proceed in a clockwise direction along the section 30 north and east boundary lines, continuing south to the section 32 northwest boundary line, T6N, R8W; then

(11) Proceed in a clockwise direction, crossing onto the El Mirage map, along the section 32 north and east boundary lines, continuing south on the section 8 east boundary line to the line's intersection with the 3,100-foot elevation line, T5N, R8W; then

(12) Proceed west-southwest along the 3,100-foot elevation line, crossing over the Lovejoy Buttes map onto the Littlerock map, and continuing to the line's intersection with the California Aqueduct, about 0.25 mile south of Pearlblossom Highway, section 22, T5N, R10W; then

(13) Proceed generally north, northwest, and west along the California Aqueduct, crossing over the Palmdale, Ritter Ridge, Lancaster West, Del Sur, Lake Hughes, and Fairmont Butte maps, onto the Neenach School map, to the aqueduct's intersection with the Pacific Crest National Scenic Trail and the Los Angeles Aqueduct in section 16, T8N, R16W; then

(14) Proceed north and northeast along the Pacific Crest National Scenic Trail and the Los Angeles Aqueduct as the aqueduct crosses over the Fairmont Butte map onto the Tylerhorse map to the 3,120-foot, marked elevation point at the West Antelope Station, section 3, T9N, R15W; then

(15) Proceed east-northeast along the Los Angeles Aqueduct (the Pacific Crest National Scenic Trail forks to the west at the 3,120-foot marked elevation point), crossing onto the Willow Springs map, to the aqueduct's intersection with Tehachapi Willow Springs Road, section 7, T10N, R13W; then

(16) Proceed southeast and south on Tehachapi Willow Springs Road, crossing onto the Little Buttes map, to the road's intersection with the 2,500-foot elevation line, section 17 west boundary line, T9N, R13W; then

(17) Proceed east and northeast along the 2,500-foot elevation line, crossing over the Willow Springs map and continuing onto the Soledad Mtn. map, where that line crosses over and back three times from the Rosamond map, to the line's intersection with the Edwards AFB boundary line, section 10, T9N, R12W; and then

(18) Proceed straight south along the Edwards AFB boundary line, crossing over to the Rosamond map, to the beginning point.

Signed: August 23, 2010.

**John J. Manfreda,**

*Administrator.*

[FR Doc. 2010–21989 Filed 9–1–10; 8:45 am]

BILLING CODE 4810–31–P

## ENVIRONMENTAL PROTECTION AGENCY

### 40 CFR Part 52

**[EPA–HQ–OAR–2010–0107; FRL–9190–8]**

**RIN–2060–AQ45**

## Action To Ensure Authority To Issue Permits Under the Prevention of Significant Deterioration Program to Sources of Greenhouse Gas Emissions: Federal Implementation Plan

**AGENCY:** Environmental Protection Agency (EPA).

**ACTION:** Proposed rule.

**SUMMARY:** In this rulemaking, EPA is proposing a Federal implementation plan (FIP) to apply in any State that is unable to submit, by its deadline, a corrective State implementation plan (SIP) revision to ensure that the State has authority to issue permits under the Clean Air Act's (CAA or Act) New Source Review Prevention of Significant Deterioration (PSD) program for sources of greenhouse gases (GHGs). This proposal is a companion rulemaking to "Action to Ensure Authority to Issue Permits Under the Prevention of Significant Deterioration Program to Sources of Greenhouse Gas Emissions: Finding of Substantial Inadequacy and SIP Call," which is being signed and published on the same schedule. In that action, EPA is proposing to make a finding of substantial inadequacy and proposing to issue a SIP call for 13 States on grounds that their SIPs do not appear to apply the PSD program to GHG-emitting sources.

**DATES:** *Comments.* Comments must be received on or before October 4, 2010.

*Public Hearing:* One public hearing concerning the proposed regulation will be held. The date, time and location will be announced separately. Please refer to **SUPPLEMENTARY INFORMATION** for additional information on the comment period and the public hearing.

**ADDRESSES:** Submit your comments, identified by Docket ID No. EPA–HQ–OAR–2010–0107 by one of the following methods:

- *www.regulations.gov:* Follow the online instructions for submitting comments.
- *E-mail: a-and-r-docket@epa.gov.*
- *Fax:* (202) 566–9744
- *Mail:* Attention Docket ID No. EPA–HQ–OAR–2010–0107, U.S. Environmental Protection Agency, EPA West (Air Docket), 1200 Pennsylvania Avenue, NW., Mail code: 6102T, Washington, DC 20460. Please include a total of 2 copies.
- *Hand Delivery:* U.S. Environmental Protection Agency, EPA West (Air Docket), 1301 Constitution Avenue, Northwest, Room 3334, Washington, DC 20004, Attention Docket ID No. EPA–HQ–OAR–2010–0107. Such deliveries are only accepted during the Docket's normal hours of operation, and special arrangements should be made for deliveries of boxed information.

*Instructions.* Direct your comments to Docket ID No. EPA–HQ–OAR–2010–0107. EPA's policy is that all comments received will be included in the public docket without change and may be made available online at *http://www.regulations.gov,* including any personal information provided, unless the comment includes information claimed to be Confidential Business Information (CBI) or other information whose disclosure is restricted by statute. Do not submit information that you consider to be CBI or otherwise protected through *http://www.regulations.gov* or e-mail. The *http://www.regulations.gov* Web site is an "anonymous access" system, which means EPA will not know your identity or contact information unless you provide it in the body of your comment. If you send an e-mail comment directly to EPA without going through *http://www.regulations.gov,* your e-mail address will be automatically captured and included as part of the comment that is placed in the public docket and made available on the Internet. If you submit an electronic comment, EPA recommends that you include your name and other contact information in the body of your comment and with any disk or CD–ROM you submit. If EPA cannot read your comment due to technical difficulties and cannot contact you for clarification, EPA may not be able to consider your comment. Electronic files should avoid the use of special characters, avoid any form of encryption, and be free of any defects or viruses. For additional information about EPA's public docket, visit the EPA Docket Center homepage at *http://www.epa.gov/epahome/dockets.htm.* For additional instructions on submitting comments, go to section I.C of the **SUPPLEMENTARY INFORMATION** section of this document.

*Docket.* All documents in the docket are listed in the *http://www.regulations.gov* index. Although listed in the index, some information is not publicly available, *e.g.,* CBI or other information whose disclosure is restricted by statute. Certain other material, such as copyrighted material, will be publicly available only in hard copy. Publicly available docket materials are available either electronically in *http://www.regulations.gov* or in hard copy at the U.S. Environmental Protection Agency, Air Docket, EPA/DC, EPA West Building, Room 3334, 1301 Constitution Ave., NW., Washington, DC. The Public Reading Room is open from 8:30 a.m. to 4:30 p.m., Monday through Friday, excluding legal holidays. The telephone number for the Public Reading Room is (202) 566–1744, and the telephone number for the Air Docket is (202) 566–1742.

**FOR FURTHER INFORMATION CONTACT:** Ms. Lisa Sutton, Air Quality Policy Division, Office of Air Quality Planning and

Standards (C504–03), Environmental Protection Agency, Research Triangle Park, NC 27711; telephone number: (919) 541–3450; fax number: (919) 541–5509; e-mail address: *sutton.lisa@epa.gov.*

**SUPPLEMENTARY INFORMATION:** For questions related to a specific State, local, or tribal permitting authority, or to submit information requested in this action, please contact the appropriate EPA regional office:

| EPA regional office | Contact for regional office (person, mailing address, telephone number) | Permitting authority |
|---|---|---|
| I | Dave Conroy, Chief, Air Programs Branch, EPA Region 1, 5 Post Office Square, Suite 100, Boston, MA 02109–3912, (617) 918–1661. | Connecticut, Massachusetts, Maine, New Hampshire, Rhode Island, and Vermont. |
| II | Raymond Werner, Chief, Air Programs Branch, EPA Region 2, 290 Broadway, 25th Floor, New York, NY 10007–1866, (212) 637–3706. | New Jersey, New York, Puerto Rico, and Virgin Islands. |
| III | Kathleen Anderson, Chief, Permits and Technical Assessment Branch, EPA Region 3, 1650 Arch Street, Philadelphia, PA 19103–2029, (215) 814–2173. | District of Columbia, Delaware, Maryland, Pennsylvania, Virginia, and West Virginia. |
| IV | Dick Schutt, Chief, Air Planning Branch, EPA Region 4, Atlanta Federal Center, 61 Forsyth Street, SW., Atlanta, GA 30303–3104, (404) 562–9033. | Alabama, Florida, Georgia, Kentucky, Mississippi, North Carolina, South Carolina, and Tennessee. |
| V | J. Elmer Bortzer, Chief, Air Programs Branch (AR–18J), EPA Region 5, 77 West Jackson Boulevard, Chicago, IL 60604–3507, (312) 886–1430. | Illinois, Indiana, Michigan, Minnesota, Ohio, and Wisconsin. |
| VI | Jeff Robinson, Chief, Air Permits Section, EPA Region 6, Fountain Place 12th Floor, Suite 1200, 1445 Ross Avenue, Dallas, TX 75202–2733, (214) 665–6435. | Arkansas, Louisiana, New Mexico, Oklahoma, and Texas. |
| VII | Mark Smith, Chief, Air Permitting and Compliance Branch, EPA Region 7, 901 North 5th Street, Kansas City, KS 66101, (913) 551–7876. | Iowa, Kansas, Missouri, and Nebraska. |
| VIII | Carl Daly, Unit Leader, Air Permitting, Monitoring & Modeling Unit, EPA Region 8, 1595 Wynkoop Street, Denver, CO 80202–1129, (303) 312–6416. | Colorado, Montana, North Dakota, South Dakota, Utah, and Wyoming. |
| IX | Gerardo Rios, Chief, Permits Office, EPA Region 9, 75 Hawthorne Street, San Francisco, CA 94105, (415) 972–3974. | Arizona; California; Hawaii and the Pacific Islands; Indian Country within Region 9 and Navajo Nation; and Nevada. |
| X | Nancy Helm, Manager, Federal and Delegated Air Programs Unit, EPA Region 10, 1200 Sixth Avenue, Suite 900, Seattle, WA 98101, (206) 553–6908. | Alaska, Idaho, Oregon, and Washington. |

## I. General Information

### *A. Does this action apply to me?*

Entities potentially affected by this rule include States, local permitting authorities, and tribal authorities.[1] Any SIP-approved PSD air permitting regulation that is not structured such that it includes GHGs among pollutants subject to regulation under the Act will potentially be found substantially inadequate to meet CAA requirements, under CAA section 110(k)(5), and the State will potentially be affected by this rule. For example, if a State's PSD regulation identifies its regulated NSR pollutants by specifically listing each individual pollutant and the list omits GHGs, then the regulation is inadequate.

Entities potentially affected by this rule also include sources in all industry groups, which have a direct obligation under the CAA to obtain a PSD permit for GHGs for projects that meet the applicability thresholds set forth in the Tailoring Rule.[2] This independent obligation on sources is specific to PSD and derives from CAA section 165(a). Any source that is subject to a State PSD air permitting regulation not structured to apply to GHG-emitting sources will potentially rely on this rule to obtain a permit that contains emission limitations that conform to requirements under CAA section 165(a). The majority of entities potentially affected by this action are expected to be in the following groups:

| Industry group | NAICS [a] |
|---|---|
| Utilities (electric, natural gas, other systems) | 2211, 2212, 2213. |
| Manufacturing (food, beverages, tobacco, textiles, leather) | 311, 312, 313, 314, 315, 316. |
| Wood product, paper manufacturing | 321, 322. |
| Petroleum and coal products manufacturing | 32411, 32412, 32419. |
| Chemical manufacturing | 3251, 3252, 3253, 3254, 3255, 3256, 3259. |
| Rubber product manufacturing | 3261, 3262. |
| Miscellaneous chemical products | 32552, 32592, 32591, 325182, 32551. |
| Nonmetallic mineral product manufacturing | 3271, 3272, 3273, 3274, 3279. |
| Primary and fabricated metal manufacturing | 3311, 3312, 3313, 3314, 3315, 3321, 3322, 3323, 3324, 3325, 3326, 3327, 3328, 3329. |
| Machinery manufacturing | 3331, 3332, 3333, 3334, 3335, 3336, 3339. |
| Computer and electronic products manufacturing | 3341, 3342, 3343, 3344, 3345, 4446. |
| Electrical equipment, appliance, and component manufacturing | 3351, 3352, 3353, 3359. |
| Transportation equipment manufacturing | 3361, 3362, 3363, 3364, 3365, 3366, 3366, 3369. |
| Furniture and related product manufacturing | 3371, 3372, 3379. |
| Miscellaneous manufacturing | 3391, 3399. |

[1] EPA respects the unique relationship between the U.S. government and tribal authorities and acknowledges that tribal concerns are not interchangeable with State concerns. However, for convenience, we refer to "State" in this rulemaking to collectively mean State, local permitting authorities, and tribal authorities.

[2] Prevention of Significant Deterioration and Title V Greenhouse Gas Tailoring Rule; Final Rule. 75 FR 31514 (June 3, 2010). The Tailoring Rule is described in more detail later in this preamble.

| Industry group | NAICS [a] |
|---|---|
| Waste management and remediation | 5622, 5629. |
| Hospitals/nursing and residential care facilities | 6221, 6231, 6232, 6233, 6239. |
| Personal and laundry services | 8122, 8123. |
| Residential/private households | 8141. |
| Non-residential (commercial) | Not available. Codes only exist for private households, construction and leasing/sales industries. |

[a] North American Industry Classification System.

*B. Where can I get a copy of this document and other related information?*

In addition to being available in the docket, an electronic copy of this proposal will also be available on the World Wide Web. Following signature by the EPA Administrator, a copy of this notice will be posted on the EPA's NSR Web site, under Regulations & Standards, at *http://www.epa.gov/nsr*.

*C. What should I consider as I prepare my comments for EPA?*

1. *Submitting CBI.* Do not submit this information to EPA through *http://www.regulations.gov* or e-mail. Clearly mark the part or all of the information that you claim to be CBI. For CBI information in a disk or CD–ROM that you mail to EPA, mark the outside of the disk or CD–ROM as CBI and then identify electronically within the disk or CD–ROM the specific information that is claimed as CBI. In addition to one complete version of the comment that includes information claimed as CBI, a copy of the comment that does not contain the information claimed as CBI must be submitted for inclusion in the public docket. Information so marked will not be disclosed except in accordance with procedures set forth in 40 CFR part 2. Send or deliver information identified as CBI only to the following address: Roberto Morales, OAQPS Document Control Officer (C404–02), U.S. EPA, Research Triangle Park, NC 27711, Attention Docket ID No. EPA–HQ–OAR–2010–0107.

2. *Tips for preparing your comments.* When submitting comments, remember to:

- Identify the rulemaking by docket number and other identifying information (subject heading, **Federal Register** date and page number).
- Follow directions—The agency may ask you to respond to specific questions or organize comments by referencing a Code of Federal Regulations (CFR) part or section number.
- Explain why you agree or disagree; suggest alternatives and substitute language for your requested changes.
- Describe any assumptions and provide any technical information and/or data that you used.
- If you estimate potential costs or burdens, explain how you arrived at your estimate in sufficient detail to allow for it to be reproduced.
- Provide specific examples to illustrate your concerns, and suggest alternatives.
- Explain your views as clearly as possible, avoiding the use of profanity or personal threats.
- Make sure to submit your comments by the comment period deadline identified.

*D. How can I find information about the public hearing?*

The EPA will hold one public hearing on this proposal. The date, time, and location of the public hearing will be announced separately. The EPA encourages commenters to provide written versions of their oral testimonies either electronically or in paper copy. If you would like to present oral testimony at the public hearing, please notify Ms. Pamela S. Long, New Source Review Group, Air Quality Policy Division (C504–03), U.S. EPA, Research Triangle Park, NC 27711, telephone number (919) 541–0641, or e-mail: *long.pam@epa.gov*. Persons interested in presenting oral testimony should notify Ms. Long at least 2 days in advance of the public hearing. Persons interested in attending the public hearing should also contact Ms. Long to verify the time, date, and location of the hearing. The public hearing will provide interested parties the opportunity to present data, views, or arguments concerning the proposed rule.

*E. How is the preamble organized?*

The information presented in this preamble is organized as follows:

I. General Information
A. Does this action apply to me?
B. Where can I get a copy of this document and other related information?
C. What should I consider as I prepare my comments for EPA?
D. How can I find information about the public hearing?
E. How is the preamble organized?
II. Background and Context of Proposed Rule
A. Introduction
B. CAA and Regulatory Context
C. SIP Inadequacy and Corrective Action; Federal Implementation Plans
D. States That Do Not Appear To Apply the PSD Program to GHG Sources; PSD GHG SIP Call
III. Proposed Federal Implementation Plan
A. Timing for FIP
B. Substance of FIP
C. Primacy of the SIP Process
IV. Statutory and Executive Order Reviews
A. Executive Order 12866—Regulatory Planning and Review
B. Paperwork Reduction Act
C. Regulatory Flexibility Act
D. Unfunded Mandates Reform
E. Executive Order 13132—Federalism
F. Executive Order 13175—Consultation and Coordination With Indian Tribal Governments
G. Executive Order 13045—Protection of Children From Environmental Health Risks and Safety Risks
H. Executive Order 13211—Actions Concerning Regulations That Significantly Affect Energy Supply, Distribution, or Use
I. National Technology Transfer and Advancement Act
J. Executive Order 12898—Federal Actions To Address Environmental Justice in Minority Populations and Low-Income Populations
K. Determination Under Section 307(d)
V. Statutory Authority

## II. Background and Context of Proposed Rule

*A. Introduction*

In this rulemaking under the CAA, EPA is proposing a FIP for 13 States for which, in a companion action, EPA is proposing a finding of SIP substantial inadequacy and is proposing to issue a SIP Call because the States' PSD SIP programs do not appear to apply to sources of GHGs. "Action to Ensure Authority to Issue Permits Under the Prevention of Significant Deterioration Program to Sources of Greenhouse Gas Emissions: Finding of Substantial Inadequacy and SIP Call" (the "PSD GHG SIP Call" or "SIP Call"). These two rulemakings address States whose permitting regulations and SIPs appear to fail to apply the PSD program to sources of GHGs in those States. As discussed further in this preamble, certain larger GHG-emitting sources will be subject to PSD permitting requirements on and after January 2, 2011. Thus, in States whose PSD programs do not apply to sources of GHGs, sources will be unable to obtain

a PSD permit that covers GHG emissions and therefore potentially unable to undertake construction or modification projects on and after January 2, 2011.

The States for which we are proposing a FIP are listed in table II–1, "States with SIPs That Do Not Appear To Apply PSD to GHG Sources (Presumptive SIP Call List)." If any of these States are not in a position to submit to EPA a corrective SIP revision by its deadline, EPA will promulgate a FIP that will provide authority to issue PSD permits for construction or modification of appropriate GHG sources in the State.

TABLE II–1—STATES WITH SIPS THAT DO NOT APPEAR TO APPLY PSD TO GHG SOURCES (PRESUMPTIVE SIP CALL LIST)

| State (or area) | EPA region |
|---|---|
| Alaska | X |
| Arizona: Pinal County; Rest of State (Excludes Maricopa County, Pima County, and Indian Country) | IX |
| Arkansas | VI |
| California: Sacramento Metropolitan AQMD | IX |
| Connecticut | I |
| Florida | IV |
| Idaho | X |
| Kansas | VII |
| Kentucky: Jefferson County; Rest of State | IV |
| Nebraska | VII |
| Nevada: Clark County | IX |
| Oregon | X |
| Texas | VI |

The rest of the States with approved SIP PSD programs (meaning each of those not listed in table II–1) are listed in table II–2, "States with SIPs that Appear to Apply PSD to GHG Sources (Presumptive Adequacy List)." For each of the States listed in table II–2 (as well as for any States with approved SIP PSD programs that we may have inadvertently omitted from table II–2), EPA is soliciting comment in the SIP Call companion notice on whether their SIPs do or do not apply the PSD program to GHG-emitting sources. We are not at this time proposing a FIP for the States listed in table II–2. However, if EPA concludes, on the basis of information EPA receives, that such a State's SIP does not apply the PSD program to GHG-emitting sources, then EPA will proceed to issue for that State a finding of substantial inadequacy and a SIP Call on the same schedule as for the States listed in table II–1 (the presumptive SIP Call list). If a SIP-called State is not able to submit to EPA a SIP revision that applies the PSD program to GHG sources by the deadline required in the SIP Call, then EPA proposes to promulgate a FIP without further notice and comment. The promulgated FIP will apply the PSD program to GHG sources in the State and provide PSD permitting authority for construction and modification of affected sources. Accordingly, interested parties in a State for which we, in the companion SIP Call rulemaking, solicit comment on the adequacy of its SIP to apply PSD to GHG-emitting sources should consider the comment period for the present notice to be their opportunity to comment on the FIP that EPA would implement in their State (should EPA ultimately determine to issue a SIP Call for their State in EPA's final action on the companion SIP Call rulemaking).

TABLE II–2—STATES WITH SIPS THAT APPEAR TO APPLY PSD TO GHG SOURCES (PRESUMPTIVE ADEQUACY LIST)

| State (or area) | EPA region |
|---|---|
| Alabama: Jefferson County; Huntsville; Rest of State | IV |
| California: Mendocino County AQMD; Monterey Bay Unified APCD; North Coast Unified AQMD; Northern Sonoma County APCD | IX |
| Colorado | VIII |
| Delaware | III |
| Georgia | IV |
| Indiana | V |
| Iowa | VII |
| Louisiana | VI |
| Maine | I |
| Maryland | III |
| Michigan | V |
| Mississippi | IV |
| Missouri | VII |
| Montana | VIII |
| New Hampshire | I |
| New Mexico: Albuquerque; Rest of State | VI |
| North Carolina: Forsythe County; Mecklenburg; Western NC; Rest of State | IV |
| North Dakota | VIII |
| Ohio | V |
| Oklahoma | VI |
| Pennsylvania: All except Allegheny County | III |
| Rhode Island | I |
| South Carolina | IV |

TABLE II–2—STATES WITH SIPS THAT APPEAR TO APPLY PSD TO GHG SOURCES (PRESUMPTIVE ADEQUACY LIST)—Continued

| State (or area) | EPA region |
|---|---|
| South Dakota | VIII |
| Tennessee: Chattanooga; Nashville; Knoxville; Memphis; Rest of State | IV |
| Vermont | I |
| Virginia | III |
| West Virginia | III |
| Wisconsin | V |
| Wyoming | VIII |
| Utah | VIII |

The background and context for this proposed rule is the same as for the proposed PSD GHG SIP Call and other actions cross-referenced in that action. Familiarity with the proposed PSD GHG SIP Call is presumed. As a result, the background and context for this rule will be only briefly summarized here.

*B. CAA and Regulatory Context*

1. SIP PSD Requirements

Under the CAA PSD requirements, a new or existing source that emits or has the potential to emit "any air pollutant" in specified quantities cannot construct or modify unless it first obtains a PSD permit that, among other things, imposes emission limitations that qualify as best available control technology (BACT). CAA sections 165(a)(1), 165(a)(4), 169(1). Longstanding EPA regulations have interpreted the term "any air pollutant" narrowly so that only emissions of any "regulated NSR pollutant" trigger PSD. 40 CFR 52.21(j)(2), (b)(50)(iv). The term "regulated NSR pollutant" is defined to include the following four classes of air pollutants:

(i) any pollutant for which a NAAQS has been promulgated;

(ii) any pollutant subject to an NSPS promulgated under CAA 111;

(iii) any pollutant subject to a standard promulgated under CAA title VI; and

(iv) "any pollutant that otherwise is subject to regulation under the Act" (excluding HAPs listed under CAA section 112).

The CAA contemplates that the PSD program be implemented in the first instance by the States. States are required to include PSD requirements in their SIPs. CAA section 110(a)(2)(C). Most States have PSD programs that have been approved into their SIPs, and these States implement their PSD program and act as the permitting authority. For the most part, these approved SIPs mirror EPA regulatory requirements, as found in 40 CFR 51.166 (except for the recently added revisions from the Tailoring Rule). As a result, most SIPs include the applicability requirement that PSD apply to sources that construct or modify and thereby increase their emissions of any "regulated NSR pollutant." A number of States do not have PSD programs approved into their SIPs; in those States, EPA's regulations at 40 CFR 52.21 govern, and either EPA or the State as EPA's delegatee acts as the permitting authority.

2. Recent EPA Regulatory Actions Concerning PSD Requirements for GHG-emitting Sources

Beginning on January 2, 2011, certain stationary sources that construct or undertake modifications will become subject to the CAA requirement to obtain a PSD permit for their GHG emissions. This is because of the following EPA regulatory actions.

By notice dated December 15, 2009, pursuant to CAA section 202(a), EPA issued, in a single final action, two findings [3] regarding GHGs that are commonly referred to as the "Endangerment Finding" and the "Cause or Contribute Finding." In the Endangerment Finding, EPA found that six long-lived and directly emitted GHGs—carbon dioxide ($CO_2$), methane ($CH_4$), nitrous oxide ($N_2O$), hydrofluorocarbons (HFCs), perfluorocarbons (PFCs), and sulfur hexafluoride ($SF_6$)—may reasonably be anticipated to endanger public health and welfare. In the Cause or Contribute Finding, the Administrator "define[d] the air pollutant as the aggregate group of the same six * * * greenhouse gases," 74 FR 66536, and found that the combined emissions of this air pollutant from new motor vehicles and new motor vehicle engines contribute to the GHG air pollution that endangers public health and welfare.

By notice dated May 7, 2010, EPA published what is commonly known as the "Light-Duty Vehicle Rule" (LDVR),[4] which for the first time established Federal controls on GHGs, those emitted from light-duty vehicles. This rule specifies, in its applicability provisions, the air pollutant subject to control as the aggregate group of the six GHGs, including $CO_2$, $CH_4$, $N_2O$, HFCs, PFCs, and $SF_6$. 75 FR 25686 (40 CFR 86.1818–12(a)).

By notice dated April 2, 2010, EPA promulgated what is commonly known as the Johnson Memo Reconsideration.[5] The Johnson Memo Reconsideration interpreted one of the regulatory triggers for PSD applicability—the term "subject to regulation"—and concluded that promulgation of the LDVR would render GHGs "subject to regulation" and thereby trigger PSD applicability for GHG-emitting sources on January 2, 2011, which according to EPA is the date upon which the LDVR takes effect.

By notice dated June 3, 2010, EPA published what is commonly known as the "Tailoring Rule,"[6] which limits the applicability of PSD to certain GHG-emitting sources through a multi-step phase-in approach. In the Tailoring Rule, EPA established the first two steps of the phase-in approach as follows:

> For the first step of this Tailoring Rule, which will begin on January 2, 2011, PSD * * * requirements will apply to sources' GHG emission only if the sources are subject to PSD * * * anyway due to their non-GHG pollutants. [We call these sources "anyway sources."] Therefore, EPA will not require sources or modifications to evaluate whether they are subject to PSD * * * requirements solely on account of their GHG emissions.

[3] "Endangerment and Cause or Contribute Findings for Greenhouse Gases Under Section 202(a) of the Clean Air Act." 74 FR 66496.

[4] "Light-Duty Vehicle Greenhouse Gas Emission Standards and Corporate Average Fuel Economy Standards; Final Rule," 75 FR 25324 (May 7, 2010).

[5] "Interpretation of Regulations that Determine Pollutants Covered by Clean Air Act Permitting Programs" (75 FR 17004; April 2, 2010) (finalizing EPA response to petition for reconsideration of "EPA's Interpretation of Regulations that Determine Pollutants Covered by Federal Prevention of Significant Deterioration (PSD) Permit Program" (commonly known as the "Johnson Memo"), December 18, 2008).

[6] "Prevention of Significant Deterioration and Title V Greenhouse Gas Tailoring Rule; Final Rule," 75 FR 31514.

Specifically, for PSD, Step 1 requires that as of January 2, 2011, the applicable requirements of PSD, most notably, the best available control technology (BACT) requirement, will apply to projects that increase net GHG emissions by at least 75,000 tpy carbon dioxide equivalent ($CO_2e$) but only if the project also significantly increase emissions of at least one non-GHG pollutant.

The second step * * * beginning on July 1, 2011, will phase in additional large sources of GHG emissions. New sources * * * that emit, or have the potential to emit, at least 100,000 tpy $CO_2e$ will become subject to the PSD * * * requirements. In addition, sources that emit or have the potential to emit at least 100,000 tpy $CO_2e$ and that undertake a modification that increases net emissions of GHGs by at least 75,000 tpy $CO_2e$ will also be subject to PSD requirements. [We call this the 100,000/75,000 threshold.] For both steps, we note that if sources or modifications exceed these $CO_2e$-adjusted GHG triggers, they are not covered by permitting requirements unless their GHG emissions also exceed the corresponding mass-based triggers (*i.e.,* unadjusted for $CO_2e$.)

75 FR 31516. In the Tailoring Rule, EPA codified the Johnson Memo Reconsideration interpretation of the term "subject to regulation" and added a further interpretation of that term designed to expedite the adoption of the phase-in approach by the States into their SIPs. In addition, in the Tailoring Rule, EPA identified the air pollutant as the aggregate of the six GHGs, again, $CO_2$, $CH_4$, $N_2O$, HFCs, PFCs, and $SF_6$. The Tailoring Rule further provided that for purposes of determining whether the amount of GHG emissions exceeds specified thresholds and therefore triggers the application of PSD, the amount of emissions must be calculated on both a mass basis and, as alluded to above, a carbon dioxide equivalent ($CO_2e$) basis. With respect to the latter, according to the rule, "PSD * * * applicability is based on the quantity that results when the mass emissions of each of these gases is multiplied by the Global Warming Potential (GWP) of that gas, and then summed for all six gases." 75 FR 31518.

Further information on the applicable CAA provisions, the Endangerment and Cause or Contribute Findings, the LDRV, the Johnson Memo Reconsideration, and the Tailoring Rule is contained in the Tailoring Rule and the proposed PSD GHG SIP Call.

We note that in this rulemaking we are not addressing the issue of accounting for emissions of GHGs from bioenergy and other biogenic sources (which are generated during the combustion or decomposition of biologically based material such as forest or agriculture products). When we finalized the Tailoring Rule, we noted that EPA planned to seek comment on how to address emissions of biogenic $CO_2$ under the PSD and title V programs through future action, such as a separate Advance Notice of Proposed Rulemaking (ANPR) (75 FR at 31591). As a first step, we recently issued a Call for Information (CFI) to solicit public comment and data on technical issues that might be used to consider biomass fuels and the emissions resulting from their combustion differently with regard to applicability under PSD and with regard to the BACT review process under PSD. See "Call for Information: Information on Greenhouse Gas Emissions Associated with Bioenergy and Other Biogenic Sources," 75 FR 41173 (July 15, 2010).

Additional information on this CFI is available at *http://www.epa.gov/climatechange/emissions/biogenic_emissions.html.* In the CFI we stated: "In response to this Call for Information, interested parties are invited to assist EPA in the following: (1) Surveying and assessing the science by submitting research studies or other relevant information, and (2) evaluating different accounting approaches and options by providing policy analyses, proposed or published methodologies, or other relevant information. Interested parties are also invited to submit data or other relevant information about the current and projected scope of GHG emissions from bioenergy and other biogenic sources." 75 FR at 41174.

Without prejudging the outcome of the CFI process, EPA anticipates that the comments we receive in response to the CFI, with regard to applicability under PSD and with regard to the BACT review process under PSD, will inform any subsequent actions to address applicability of emissions of GHGs from bioenergy and other biogenic sources under the PSD program.

### *C. SIP Inadequacy and Corrective Action; Federal Implementation Plans*

The CAA provides a mechanism for the correction of SIPs that are inadequate, under CAA section 110(k)(5), which provides:

> (5) Calls for plan revisions
>
> Whenever the Administrator finds that the applicable implementation plan for any area is substantially inadequate to * * * comply with any requirement of this Act, the Administrator shall require the State to revise the plan as necessary to correct such inadequacies. The Administrator shall notify the State of the inadequacies and may establish reasonable deadlines (not to exceed 18 months after the date of such notice) for the submission of such plan revisions.

This provision by its terms authorizes the Administrator to "find[] that [a SIP] * * * is substantially inadequate to * * * comply with any requirement of this Act," and, based on that finding, "require the State to revise the [SIP] * * * to correct such inadequacies." This latter action is commonly known as a "SIP call." In addition, this provision provides that EPA must notify the State of the inadequacies and authorizes EPA to establish a "reasonable deadline[] (not to exceed 18 months after the date of such notice)" for the submission of the corrective SIP revision.

If the State fails to submit the corrective SIP revision by the deadline, CAA section 110(c) authorizes EPA to "find[] that [the] State has failed to make a required submission." CAA section 110(c)(1)(A). Once EPA makes that finding, CAA section 110(c)(1) requires EPA to "promulgate a Federal implementation plan at any time with 2 years after the [finding] * * * unless the State corrects the deficiency, and [EPA] approves the plan or plan revision, before [EPA] promulgates such [FIP]."

### *D. States That Do Not Appear To Apply the PSD Program to GHG Sources; PSD GHG SIP Call*

A number of States do not have an approved PSD SIP; as a result, in these States [7] the applicable regulatory authority is EPA's regulations, found in 40 CFR 52.21, which constitute a FIP. For sources in these States, either the EPA Regional Office or the State acting as EPA's delegatee is the permitting authority. In these States, EPA's regulations apply directly. As a result, the regulations apply the PSD program to any constructing or modifying source that emits the requisite quantity of any "regulated NSR pollutant," 40 CFR 52.21(b)(50), which includes any "pollutant subject to regulation," which, in turn, as discussed earlier in this preamble, will cover GHG emissions on January 2, 2011.

All of the other States administer their PSD programs through an approved SIP and, as a result, they or their local

[7] In the following listed State or local jurisdictions, as well as in all Indian country, EPA is the PSD permitting authority, implementing the Federal PSD regulation at 40 CFR 52.21: American Samoa; Arizona (some areas); California (most areas); District of Columbia; Guam; Massachusetts; New Jersey; New York; Northern Mariana Islands; Puerto Rico; Trust Territories; and the Virgin Islands. In a smaller number of areas, listed as follows, the State or local permitting authority is delegated at least partial authority by EPA to implement the Federal PSD regulation: Arizona (some areas); California (some areas); Hawaii; Illinois; Minnesota; Nevada (most areas); Pennsylvania (some areas); and Washington.

entities are the PSD permitting authority. Of these States, most appear to have SIP PSD applicability provisions that parallel EPA's regulatory PSD applicability provisions and therefore apply PSD to any stationary source that emits the requisite amount of any air pollutant "subject to regulation." As a result, and absent any other provision under State law that limits the applicability of these provisions, these PSD SIPs will cover GHG sources, just as the current FIPs do, in these States, on and after January 2, 2011. Therefore, these States or local authorities will be able to act as the permitting authority for GHG sources in their States.

As discussed in the PSD GHG SIP Call, it appears, on the basis of preliminary research and information received that for 13 of the States with approved PSD SIPs, the PSD programs do not apply to GHG-emitting sources. In many of these SIPs, the PSD applicability provisions do not mirror EPA's regulatory provisions by applying PSD requirements to sources of any air pollutant "subject to regulation." Instead, the applicability provisions specifically list the air pollutants to which the PSD program applies and do not include GHGs on that list. Although, as discussed in the proposed PSD GHG SIP Call, these SIPs may have other provisions that provide the State with general authority to issue permits that meet CAA requirements, until EPA receives more information, we will proceed on the basis that these SIPs do not apply their PSD programs to GHG sources. Also as discussed in the proposed SIP Call, the State of Connecticut explicitly excludes GHGs from the State PSD program. In addition, as discussed in the proposed SIP Call, some States with SIP PSD applicability provisions that do mirror EPA's regulatory provisions by applying PSD requirements to sources of any air pollutant "subject to regulation" nevertheless do not appear to apply PSD to GHG-emitting sources because these States have other State law constraints against applying State law or SIP requirements without specific State action authorizing such application of law.

In the SIP Call, EPA proposed to find the SIPs for these 13 States to be substantially inadequate, and EPA proposed a SIP Call under CAA section 110(k)(5). EPA stated that it intends to finalize the finding of substantial inadequacy and the SIP Call by December 1, 2010. EPA further stated that it would allow States 12 months from the date of signing the finding and the SIP Call for States to submit their corrective SIP revisions, but that States could indicate to EPA that they do not object to a shorter deadline, and in that event EPA would impose that shorter deadline.

In the proposed SIP Call, EPA also solicited comment on whether the approved SIPs for those other States (listed in table II–2 of this preamble, for which EPA was not proposing a SIP Call) do or do not apply their PSD programs to GHG-emitting sources. EPA asked the other States to review their SIPs and, if their SIPs fail to apply PSD to GHG-emitting sources, advise EPA by the end of the comment period of the State's inadequacy and also inform EPA if they do not object to a shorter deadline for submittal of the required corrective SIP revision.

In the proposed SIP Call, we stated that the required corrective SIP revision could constitute a simple addition of GHGs to the list of pollutants subject to PSD applicability, with GHGs defined as the aggregate of six pollutants—$CO_2$, $CH_4$, $N_2O$, HFCs, PFCs, and $SF_6$.

## III. Proposed Federal Implementation Plan

In this rulemaking, we propose a FIP, under CAA section 110(c)(1)(A), for any State—if ultimately there is any—for which we issue a finding of failure to submit a SIP submission required under the PSD GHG SIP Call.

### *A. Timing for FIP*

If any of the States for which we issue the SIP Call does not meet its SIP submittal deadline, we will immediately issue a finding of failure to submit a required SIP submission, under CAA section 110(c)(1)(A), and immediately thereafter promulgate a FIP for the State. This timing for FIP promulgation is authorized under CAA section 110(c)(1), which authorizes us to promulgate a FIP "at any time within 2 years after" finding a failure to submit a required SIP submission. We intend to take these actions immediately in order to minimize any period of time during which larger-emitting sources may be under an obligation to obtain PSD permits for their GHGs when they construct or modify, but no permitting authority is authorized to issue those permits.

After we have promulgated a FIP, it must remain in place until the State submits a SIP revision and we approve that SIP revision. CAA section 110(c)(1). Under the present circumstances, we will act on a SIP revision to apply the PSD program to GHG sources as quickly as possible. Upon request of the State, we will parallel-process the SIP submittal. That is, if the State submits to us the draft SIP submittal for which the State intends to hold a hearing, we will propose the draft SIP submittal for approval and open a comment period during the same time as the State hearing. If the SIP submittal that the State ultimately submits to us is substantially similar to the draft SIP submittal, we will proceed to take final action without a further proposal or comment period. If we approve such a SIP revision, we will at the same time rescind the FIP.

### *B. Substance of FIP*

The proposed FIP constitutes the EPA regulations found in 40 CFR 52.21, including the PSD applicability provisions, with a limitation to assure that, strictly for purposes of this rulemaking, the FIP applies only to GHGs. Under the PSD applicability provisions in 40 CFR 52.21(b)(50), the PSD program applies to sources that emit the requisite amounts of any "regulated NSR pollutant[s]," including any air pollutant "subject to regulation." However, in States for which EPA would promulgate a FIP to apply PSD to GHG-emitting pollutants, the approved SIP already applies PSD to other air pollutants. To appropriately limit the scope of the FIP, EPA proposes in this action to amend 40 CFR 52.21(b)(50) to limit the applicability provision to GHGs.

We propose this FIP because it would, to the greatest extent possible, mirror EPA regulations (as well as those of most of the States). In addition, this FIP would readily incorporate the phase-in approach for PSD applicability to GHG sources that EPA has developed in the Tailoring Rule and expects to develop further through additional rulemaking. As explained in the Tailoring Rule, incorporating this phase-in approach—including Steps 1 and 2 of the phase-in as promulgated in the Tailoring Rule—can be most readily accomplished through interpretation of the terms in the definition "regulated NSR pollutant," including the term "subject to regulation."

In accordance with the Tailoring Rule, as described earlier in this preamble, the FIP would apply in Step 1 of the phase-in approach only to "anyway sources" (that is, sources undertaking construction or modification projects that are required to apply for PSD permits anyway due to their non-GHG emissions and that emit GHGs in the amount of at least 75,000 tpy on a $CO_2e$ basis) and would apply in Step 2 of the phase-in approach to both "anyway sources" and sources that meet the 100,000/75,000-tpy threshold (that is, (i) sources that newly construct and would not be subject to PSD on account

of their non-GHG emissions, but that emit GHGs in the amount of at least 100,000 tpy $CO_2e$, and (ii) existing sources that emit GHGs in the amount of at least 100,000 tpy $CO_2e$, that undertake modifications that would not trigger PSD on the basis of their non-GHG emissions, but that increase GHGs by at least 75,000 tpy $CO_2e$).

Under the FIP, with respect to permits for "anyway sources," EPA will be responsible for acting on permit applications for only the GHG portion of the permit, and the State will retain responsibility for the rest of the permit. Likewise, with respect to permits for sources that meet the 100,000/75,000-tpy threshold, our preferred approach—for reasons of consistency—is that EPA will be responsible for acting on permit applications for only the GHG portion of the permit, that the State permitting authorities will be responsible for the non-GHG portion of the permit, and EPA will coordinate with the State permitting authority as needed in order to fully cover any non-GHG emissions that, for example, are subject to BACT because they exceed the significance levels. We recognize that questions may arise as to whether the State permitting authorities have authority to permit non-GHG emissions; as a result, we solicit comment on whether EPA should also be the permitting authority for the non-GHG portion of the permit for these latter sources.

We propose that the FIP consist of the regulatory provisions included in 40 CFR 52.21, except that the applicability provision would include a limitation so that it applies for purposes of this rulemaking only to GHGs.

*C. Primacy of the SIP Process*

This proposal is secondary to our overarching goal, which is to assure that in every instance, it will be the State that will be that permitting authority. EPA continues to recognize that the States are best suited to the task of permitting because they and their sources have experience working together in the State PSD program to process permit applications. EPA seeks to remain solely in its primary role of providing guidance and acting as a resource for the States as they make the various required permitting decisions for GHG emissions.

Accordingly, beginning immediately we intend to work closely with the States—as we have already begun to do since earlier in the year—to help them promptly develop and submit to us their corrective SIP revisions that extend their PSD program to GHG-emitting sources. Moreover, we intend to promptly act on their SIP submittals. Again, EPA's goal is to have each and every affected State have in place the necessary permitting authorities by the time businesses seeking construction permits need to have their applications processed and the permits issued—and to achieve that outcome by means of engaging with the States directly through a concerted process of consultation and support.

EPA is taking up the additional task of proposing this FIP and the companion SIP Call action only because the Agency believes it is compelled to do so by the need to assure businesses, to the maximum extent possible and as promptly as possible, that a permitting authority is available to process PSD permit applications for GHG-emitting sources once they become subject to PSD requirements on January 2, 2011.

In order to provide that assurance, we are obligated to recognize, as both States and the regulated community already do, that there may be circumstances in which States are simply unable to develop and submit those SIP revisions by January 2, 2011, or for some period of time beyond that date. As a result, absent further action by EPA, those States' affected sources confront the risk that they may have to put on hold their plans to construct or modify, a risk that may have adverse consequences for the economy.

Given these exigent circumstances, EPA proposes this plan, within the limits of our power, with the intent to make a back-up permitting authority available—and to send a signal of assurance expeditiously in order to reduce uncertainty and thus facilitate businesses' planning. Within the design of the CAA, it is EPA that must fill that role of back-up permitting authority. This FIP and the companion SIP Call action fulfill the CAA requirements to establish EPA in that role.

At the same time, we propose these actions with the intent that States retain as much discretion as possible in the hand of the States. In the SIP Call rulemaking, EPA proposes that States may choose the deadline they consider reasonable for submission of their corrective SIP revision. If, under CAA requirements, we are compelled to promulgate a FIP, we invite the affected State to accept a delegation of authority to implement that FIP, so that it will still be the State that processes the permit applications, albeit operating under Federal law. In addition, if we are compelled to issue a FIP, we intend to continue to work closely with the State to assist in developing and submitting for approval its corrective SIP revision, so as to minimize the amount of time that the FIP must remain in place.

Finally, we can report that in informal conversations, officials of various States have acknowledged the need for our SIP Call and FIP actions. That is, they have acknowledged that a short-term FIP may be necessary in their States to establish permitting authority to construct and modify in accordance with environmental safeguards for these sources. In addition, some States have indicated that they will closely consider their opportunities to accept delegation of the permitting responsibilities.

## IV. Statutory and Executive Order Reviews

*A. Executive Order 12866—Regulatory Planning and Review*

Under Executive Order (EO) 12866 (58 FR 51735, October 4, 1993), this action is a "significant regulatory action" because it raises novel legal or policy issues. Accordingly, EPA submitted this action to the Office of Management and Budget (OMB) for review under EO 12866 and any changes made in response to OMB recommendations have been documented in the docket for this action.

*B. Paperwork Reduction Act*

This action imposes new information collection burden. The action is based on information concerning whether the States have authority to regulate GHGs under their SIP PSD provisions, which information is already requested of the States in the Tailoring Rule. The OMB has previously approved the information collection requirements contained in the existing regulations for PSD (*see, e.g.,* 40 CFR 52.21) and title V (*see* 40 CFR parts 70 and 71) under the provisions of the *Paperwork Reduction Act,* 44 U.S.C. 3501 *et seq.* and has assigned OMB control number 2060–0003 and OMB control number 2060–0336 respectively. The OMB control numbers for EPA's regulations in 40 CFR are listed in 40 CFR part 9.

The Tailoring Rule does not establish any new requirements (either control or reporting) for any sources. It merely establishes the thresholds that trigger NSR and title V for GHG sources. The trigger for GHG and title V is not due to the Tailoring Rule but the result of the endangerment finding and the LDVR. The NSR and title V ICRs will need to be modified to include the new sources that will be triggered due to the GHG requirements (in July 2011). The Agency anticipates making such modifications upon renewal of the NSR and title V ICRs at the end of the year.

*C. Regulatory Flexibility Act*

The Regulatory Flexibility Act (RFA) generally requires an agency to prepare a regulatory flexibility analysis of any rule subject to notice and comment rulemaking requirements under the Administrative Procedure Act or any other statute unless the agency certifies that the rule will not have a significant economic impact on a substantial number of small entities. Small entities include small businesses, small organizations, and small governmental jurisdictions.

For purposes of assessing the impacts of this notice on small entities, small entity is defined as: (1) A small business that is a small industrial entity as defined in the U.S. Small Business Administration (SBA) size standards (*see* 13 CFR 121.201); (2) a small governmental jurisdiction that is a government of a city, county, town, school district, or special district with a population of less than 50,000; or (3) a small organization that is any not-for-profit enterprise that is independently owned and operated and is not dominant in its field.

After considering the economic impacts of this proposed rule on small entities, I certify that this action will not have a significant economic impact on a substantial number of small entities. Although this rule would lead to Federal permitting requirements for certain sources, those sources are large emitters of GHGs and tend to be large sources. We continue to be interested in the potential impacts of the proposed rule on small entities and welcome comments on issues related to such impacts.

*D. Unfunded Mandates Reform Act*

This action contains no Federal mandates under the provisions of Title II of the Unfunded Mandates Reform Act of 1995 (UMRA, 2 U.S.C. 1531–1538) for State, local or tribal governments or the private section. The action imposes no enforceable duty on any State, local or tribal governments or the private sector. This action merely prescribes EPA's action for States that do not meet their existing obligation for PSD SIP submittal. Thus, this proposed rule is not subject to the requirements of sections 202 or 205 of UMRA.

This action is also not subject to the requirements of section 203 of UMRA because it contains no regulatory requirements that might significantly or uniquely affect small governments. This action merely prescribes EPA's action for States that do not meet their existing obligation for PSD SIP submittal.

*E. Executive Order 13132—Federalism*

This action does not have federalism implications. It will not have substantial direct effects on the States, on the relationship between the national government and the States, or on the distribution of power and responsibilities among the various levels of government, as specified in Executive Order 13132. This action merely prescribes EPA's action for States that do not meet their existing obligation for PSD SIP submittal. Thus, Executive Order 13132 does not apply to this action.

In the spirit of Executive Order 13132, and consistent with EPA policy to promote communications between EPA and State and local governments, EPA specifically solicits comment on this proposed rule from State and local officials.

*F. Executive Order 13175—Consultation and Coordination With Indian Tribal Governments*

This action does not have tribal implications, as specified in Executive Order 13175 (65 FR 67249, November 9, 2000). This action does not impose a FIP in any tribal area. Thus, Executive Order 13175 does not apply to this action.

Although Executive Order 13175 does not apply to this proposed rule, EPA specifically solicits additional comment on this proposed action from tribal officials.

*G. Executive Order 13045—Protection of Children From Environmental Health Risks and Safety Risks*

EPA interprets EO 13045 (62 FR 19885, April 23, 1997) as applying only to those regulatory actions that concern health or safety risks, such that the analysis required under section 5–501 of the EO has the potential to influence the regulation. This action is not subject to EO 13045 because it merely prescribes EPA's action for States that do not meet their existing obligation for PSD SIP submittal.

*H. Executive Order 13211—Actions Concerning Regulations That Significantly Affect Energy Supply, Distribution, or Use*

This action is not a "significant energy action" as defined in Executive Order 13211 (66 FR 28355 (May 22, 2001)), because it is not likely to have a significant adverse effect on the supply, distribution, or use of energy. This action merely prescribes EPA's action for States that do not meet their existing obligation for PSD SIP submittal.

*I. National Technology Transfer and Advancement Act*

Section 12(d) of the National Technology Transfer and Advancement Act of 1995 ("NTTAA"), Public Law 104–113, 12(d) (15 U.S.C. 272 note) directs EPA to use voluntary consensus standards in its regulatory activities unless to do so would be inconsistent with applicable law or otherwise impractical. Voluntary consensus standards are technical standards (*e.g.,* materials specifications, test methods, sampling procedures, and business practices) that are developed or adopted by voluntary consensus standards bodies. NTTAA directs EPA to provide Congress, through OMB, explanations when the Agency decides not to use available and applicable voluntary consensus standards.

This proposed rulemaking does not involve technical standards. Therefore, EPA is not considering the use of any voluntary consensus standards.

*J. Executive Order 12898—Federal Actions To Address Environmental Justice in Minority Populations and Low-Income Populations*

Executive Order 12898 (59 FR 7629, February 16, 1994) establishes Federal executive policy on environmental justice. Its main provision directs Federal agencies, to the greatest extent practicable and permitted by law, to make environmental justice part of their mission by identifying and addressing, as appropriate, disproportionately high and adverse human health or environmental effects of their programs, policies, and activities on minority populations and low-income populations in the U.S.

EPA has determined that this proposed rule will not have disproportionately high and adverse human health or environmental effects on minority or low-income populations because it does not affect the level of protection provided to human health or the environment. This proposed rule merely prescribes EPA's action for States that do not meet their existing obligation for PSD SIP submittal.

*K. Determination Under Section 307(d)*

Pursuant to sections 307(d)(1)(B) of the CAA, this action is subject to the provisions of section 307(d). Section 307(d)(1)(B) provides that the provisions of section 307(d) apply to "the promulgation or revision of an implementation plan by the Administrator under section 110(c) of this Act."

**V. Statutory Authority**

The statutory authority for this action is provided by sections 110, 165, 301, and 307(d)(1)(B) of the CAA as amended (42 U.S.C. 7410, 7475, 7601, and 7407(d)(1)(B)). This action is subject to section 307(d) of the CAA (42 U.S.C. 7407(d)).

**Page 46 of 49—Action To Ensure Authority To Issue Permits Under the Prevention of Significant Deterioration Program to Sources of Greenhouse Gas Emissions: Federal Implementation Plan**

**List of Subjects in 40 CFR Part 52**

Environmental protection, Air pollution control, Carbon dioxide, Carbon dioxide equivalents, Carbon monoxide, Greenhouse gases, Hydrofluorocarbons, Intergovernmental relations, Lead, Methane, Nitrogen dioxide, Nitrous oxide, Ozone, Particulate matter, Perfluorocarbons, Reporting and recordkeeping requirements, Sulfur hexafluoride, Sulfur oxides, Volatile organic compounds.

Dated: August 12, 2010.

**Lisa P. Jackson,**

*Administrator.*

For the reasons set out in the preamble, title 40, chapter I of the Code of Federal Regulations is proposed to be amended as follows:

## PART 52—[AMENDED]

1. The authority citation for part 52 continues to read as follows:

**Authority:** 42 U.S.C. 7401 *et seq.*

2. Section 52.37 is added to read as follows:

**§ 52.37 What are the requirements of the Federal Implementation Plans (FIPs) to issue permits under the Prevention of Significant Deterioration requirements to sources that emit greenhouse gases?**

(a) The requirements of sections 160 through 165 of the Clean Air Act are not met to the extent the plan, as approved, of the States listed in paragraph (b) of this section does not apply with respect to emissions of the pollutant GHGs from certain stationary sources. Therefore, the provisions of § 52.21 except paragraph (a)(1) are hereby made a part of the plan for each State listed in paragraph (b) of this section for: (1) Beginning January 2, 2011, the pollutant GHGs from stationary sources described in § 52.21(b)(49)(iv), and [Alternative 1 for paragraph (a)(2)]

(2) Beginning July 1, 2011, in addition to the pollutant GHGs from sources described under paragraph (a)(1) of this section, the pollutant GHGs from stationary sources described in § 52.21(b)(49)(v). [Alternative 2 for paragraph (a)(2)]

(2) Beginning July 1, 2011, in addition to the pollutant GHGs from sources described under paragraph (a)(1) of this section, stationary sources described in § 52.21(b)(49)(v).

(b) Paragraph (a) of this section applies to:

(1) Alaska;

(2) Arizona, Pinal County; Rest of State (Excludes Maricopa County, Pima County, and Indian Country);

(3) Arkansas;

(4) California, Sacramento Metropolitan AQMD;

(5) Connecticut;

(6) Florida;

(7) Idaho;

(8) Kansas;

(9) Kentucky, Jefferson County and Rest of State;

(10) Nebraska;

(11) Nevada, Clark County;

(12) Oregon;

(13) Texas.

(c) For purposes of this section, references to the "pollutant GHGs" refers to the pollutant GHGs, as described in § 52.21(b)(49)(i).

[FR Doc. 2010–21706 Filed 9–1–10; 8:45 am]

BILLING CODE 6560–50–P

---

## ENVIRONMENTAL PROTECTION AGENCY

## 40 CFR Part 52

**[EPA–HQ–OAR–2010–0107; FRL–9190–7]**

**RIN–2060–AQ08**

## Action To Ensure Authority To Issue Permits Under the Prevention of Significant Deterioration Program to Sources of Greenhouse Gas Emissions: Finding of Substantial Inadequacy and SIP Call

**AGENCY:** Environmental Protection Agency (EPA).

**ACTION:** Proposed rule.

**SUMMARY:** The EPA is proposing to find that 13 States with EPA-approved State implementation plan (SIP) New Source Review Prevention of Significant Deterioration (PSD) programs are substantially inadequate to meet Clean Air Act (CAA) requirements because they do not appear to apply PSD requirements to GHG-emitting sources. For each of these States, EPA proposes to require the State (through a "SIP Call") to revise its SIP as necessary to correct such inadequacies. EPA proposes an expedited schedule for States to submit their corrective SIP revision, in light of the fact that as of January 2, 2011, certain GHG-emitting sources will become subject to the PSD requirements and may not be able to obtain a PSD permit in order to construct or modify. As for the rest of the States with approved SIP PSD programs, EPA solicits comment on whether their PSD programs do or do not apply to GHG-emitting sources. If, on the basis of information EPA receives, EPA concludes that the SIP for such a State does not apply the PSD program to GHG-emitting sources, then EPA will proceed to also issue a finding of substantial inadequacy and a SIP Call for that State.

**DATES:** *Comments.* Comments must be received on or before October 4, 2010.

**ADDRESSES:** Submit your comments, identified by Docket ID No. EPA–HQ–OAR–2010–0107 by one of the following methods:

- *http://www.regulations.gov:* Follow the online instructions for submitting comments.
- *E-mail: a-and-r-docket@epa.gov.*
- *Fax:* (202) 566–9744.
- *Mail:* Attention Docket ID No. EPA–HQ–OAR–2010–0107, U.S. Environmental Protection Agency, EPA West (Air Docket), 1200 Pennsylvania Avenue, NW., Mail code: 6102T, Washington, DC 20460. Please include a total of 2 copies. In addition, please mail a copy of your comments on the information collection provisions to the Office of Information and Regulatory Affairs, Office of Management and Budget (OMB), Attn: Desk Officer for EPA, 725 17th Street, NW., Washington, DC 20503.
- *Hand Delivery:* U.S. Environmental Protection Agency, EPA West (Air Docket), 1301 Constitution Avenue, NW., Room 3334, Washington, DC 20004, Attention Docket ID No. EPA–HQ–OAR–2010–0107. Such deliveries are only accepted during the Docket's normal hours of operation, and special arrangements should be made for deliveries of boxed information.

*Instructions.* Direct your comments to Docket ID No. EPA–HQ–OAR–2010–0107. EPA's policy is that all comments received will be included in the public docket without change and may be made available online at *http://www.regulations.gov,* including any personal information provided, unless the comment includes information claimed to be Confidential Business Information (CBI) or other information whose disclosure is restricted by statute. Do not submit information that you consider to be CBI or otherwise protected through *http://www.regulations.gov* or e-mail. The

*http://www.regulations.gov* Web Site is an "anonymous access" system, which means EPA will not know your identity or contact information unless you provide it in the body of your comment. If you send an e-mail comment directly to EPA without going through *http://www.regulations.gov,* your e-mail address will be automatically captured and included as part of the comment that is placed in the public docket and made available on the Internet. If you submit an electronic comment, EPA recommends that you include your name and other contact information in the body of your comment and with any disk or CD–ROM you submit. If EPA cannot read your comment due to technical difficulties and cannot contact you for clarification, EPA may not be able to consider your comment. Electronic files should avoid the use of special characters, avoid any form of encryption, and be free of any defects or viruses. For additional information about EPA's public docket visit the EPA Docket Center homepage at *http://www.epa.gov/epahome/dockets.htm.* For additional instructions on submitting comments, go to section I.C of the **SUPPLEMENTARY INFORMATION** section of this document.

*Docket.* All documents in the docket are listed in the *http://www.regulations.gov* index. Although listed in the index, some information is not publicly available, *e.g.,* CBI or other information whose disclosure is restricted by statute. Certain other material, such as copyrighted material, will be publicly available only in hard copy. Publicly available docket materials are available either electronically in *http://www.regulations.gov* or in hard copy at the U.S. Environmental Protection Agency, Air Docket, EPA/DC, EPA West Building, Room 3334, 1301 Constitution Ave., NW., Washington, DC. The Public Reading Room is open from 8:30 a.m. to 4:30 p.m., Monday through Friday, excluding legal holidays. The telephone number for the Public Reading Room is (202) 566–1744, and the telephone number for the Air Docket is (202) 566–1742.

**FOR FURTHER INFORMATION CONTACT:** Ms. Lisa Sutton, Air Quality Policy Division, Office of Air Quality Planning and Standards (C504–03), Environmental Protection Agency, Research Triangle Park, NC 27711; telephone number: (919) 541–3450; fax number: (919) 541–5509; e-mail address: *sutton.lisa@epa.gov.*

**SUPPLEMENTARY INFORMATION:** For questions related to a specific State, local, or tribal permitting authority, or to submit information requested in this action, please contact the appropriate EPA regional office:

| EPA regional office | Contact for regional office (person, mailing address, telephone number) | Permitting authority |
|---|---|---|
| I | Dave Conroy, Chief, Air Programs Branch, EPA Region 1, 5 Post Office Square, Suite 100, Boston, MA 02109–3912, (617) 918–1661. | Connecticut, Massachusetts, Maine, New Hampshire, Rhode Island, and Vermont. |
| II | Raymond Werner, Chief, Air Programs Branch, EPA Region 2, 290 Broadway, 25th Floor, New York, NY 10007–1866, (212) 637–3706. | New Jersey, New York, Puerto Rico, and Virgin Islands. |
| III | Kathleen Anderson, Chief, Permits and Technical Assessment Branch, EPA Region 3, 1650 Arch Street, Philadelphia, PA 19103–2029, (215) 814–2173. | District of Columbia, Delaware, Maryland, Pennsylvania, Virginia, and West Virginia. |
| IV | Dick Schutt, Chief, Air Planning Branch, EPA Region 4, Atlanta Federal Center, 61 Forsyth Street, SW, Atlanta, GA 30303–3104, (404) 562–9033. | Alabama, Florida, Georgia, Kentucky, Mississippi, North Carolina, South Carolina, and Tennessee. |
| V | J. Elmer Bortzer, Chief, Air Programs Branch (AR–18J), EPA Region 5, 77 West Jackson Boulevard, Chicago, IL 60604–3507, (312) 886–1430. | Illinois, Indiana, Michigan, Minnesota, Ohio, and Wisconsin. |
| VI | Jeff Robinson, Chief, Air Permits Section, EPA Region 6, Fountain Place 12th Floor, Suite 1200, 1445 Ross Avenue, Dallas, TX 75202–2733, (214) 665–6435. | Arkansas, Louisiana, New Mexico, Oklahoma, and Texas. |
| VII | Mark Smith, Chief, Air Permitting and Compliance Branch, EPA Region 7, 901 North 5th Street, Kansas City, KS 66101, (913) 551–7876. | Iowa, Kansas, Missouri, and Nebraska. |
| VIII | Carl Daly, Unit Leader, Air Permitting, Monitoring & Modeling Unit, EPA Region 8, 1595 Wynkoop Street, Denver, CO 80202–1129, (303) 312–6416. | Colorado, Montana, North Dakota, South Dakota, Utah, and Wyoming. |
| IX | Gerardo Rios, Chief, Permits Office, EPA Region 9, 75 Hawthorne Street, San Francisco, CA 94105, (415) 972–3974. | Arizona; California; Hawaii and the Pacific Islands; Indian Country within Region 9 and Navajo Nation; and Nevada. |
| X | Nancy Helm, Manager, Federal and Delegated Air Programs Unit, EPA Region 10, 1200 Sixth Avenue, Suite 900, Seattle, WA 98101, (206) 553–6908. | Alaska, Idaho, Oregon, and Washington. |

## I. General Information

### *A. Does this action apply to me?*

Entities potentially affected by this rule include States, local permitting authorities, and tribal authorities.[1] Any SIP-approved PSD air permitting regulation that is not structured such that it includes GHGs among pollutants subject to the PSD program will potentially be found to be substantially inadequate to meet CAA requirements, under CAA section 110(k)(5), and the State will potentially be affected by this rule. For example, if a State's PSD regulation identifies its regulated NSR pollutants by specifically listing each individual pollutant and the list omits GHGs, then the regulation is substantially inadequate.

Entities potentially affected by this rule also include sources in all industry groups, which have a direct obligation under the CAA to obtain a PSD permit for GHGs for projects that meet the applicability thresholds set forth in the Tailoring Rule.[2] This independent obligation on sources is specific to PSD and derives from CAA section 165(a). Any source that is subject to a State PSD air permitting regulation not structured to apply to GHG-emitting sources will potentially rely on this rule to obtain a permit that contains emission limitations that conform to requirements under CAA section 165(a). The majority of entities potentially affected by this

[1] EPA respects the unique relationship between the U.S. government and tribal authorities and acknowledges that tribal concerns are not interchangeable with State concerns. However, for convenience, we refer to "States" in this rulemaking to collectively mean States, local permitting authorities, and tribal authorities.

[2] Prevention of Significant Deterioration and Title V Greenhouse Gas Tailoring Rule; Final Rule. 75 FR 31514 (June 3, 2010). The Tailoring Rule is described in more detail later in this preamble.

action are expected to be in the following groups:

| Industry group | NAICS [a] |
|---|---|
| Utilities (electric, natural gas, other systems) | 2211, 2212, 2213. |
| Manufacturing (food, beverages, tobacco, textiles, leather) | 311, 312, 313, 314, 315, 316. |
| Wood product, paper manufacturing | 321, 322. |
| Petroleum and coal products manufacturing | 32411, 32412, 32419. |
| Chemical manufacturing | 3251, 3252, 3253, 3254, 3255, 3256, 3259. |
| Rubber product manufacturing | 3261, 3262. |
| Miscellaneous chemical products | 32552, 32592, 32591, 325182, 32551. |
| Nonmetallic mineral product manufacturing | 3271, 3272, 3273, 3274, 3279. |
| Primary and fabricated metal manufacturing | 3311, 3312, 3313, 3314, 3315, 3321, 3322, 3323, 3324, 3325, 3326, 3327, 3328, 3329. |
| Machinery manufacturing | 3331, 3332, 3333, 3334, 3335, 3336, 3339. |
| Computer and electronic products manufacturing | 3341, 3342, 3343, 3344, 3345, 4446. |
| Electrical equipment, appliance, and component manufacturing | 3351, 3352, 3353, 3359. |
| Transportation equipment manufacturing | 3361, 3362, 3363, 3364, 3365, 3366, 3366, 3369. |
| Furniture and related product manufacturing | 3371, 3372, 3379. |
| Miscellaneous manufacturing | 3391, 3399. |
| Waste management and remediation | 5622, 5629. |
| Hospitals/nursing and residential care facilities | 6221, 6231, 6232, 6233, 6239. |
| Personal and laundry services | 8122, 8123. |
| Residential/private households | 8141. |
| Non-residential (commercial) | Not available. Codes only exist for private households, construction and leasing/sales industries. |

[a] North American Industry Classification System.

*B. Where can I get a copy of this document and other related information?*

In addition to being available in the docket, an electronic copy of this proposal will also be available on the World Wide Web. Following signature by the EPA Administrator, a copy of this notice will be posted on the EPA's NSR Web Site, under Regulations & Standards, at *http://www.epa.gov/nsr.*

*C. What should I consider as I prepare my comments for EPA?*

1. *Submitting CBI.* Do not submit this information to EPA through *http://www.regulations.gov* or e-mail. Clearly mark the part or all of the information that you claim to be CBI. For CBI information in a disk or CD–ROM that you mail to EPA, mark the outside of the disk or CD–ROM as CBI and then identify electronically within the disk or CD–ROM the specific information that is claimed as CBI. In addition to one complete version of the comment that includes information claimed as CBI, a copy of the comment that does not contain the information claimed as CBI must be submitted for inclusion in the public docket. Information so marked will not be disclosed except in accordance with procedures set forth in 40 CFR part 2. Send or deliver information identified as CBI only to the following address: Roberto Morales, OAQPS Document Control Officer (C404–02), U.S. EPA, Research Triangle Park, NC 27711, Attention Docket ID No. EPA–HQ–OAR–2010–0107.

2. *Tips for preparing your comments.* When submitting comments, remember to:

- Identify the rulemaking by docket number and other identifying information (subject heading, **Federal Register** date and page number).
- Follow directions—The agency may ask you to respond to specific questions or organize comments by referencing a Code of Federal Regulations (CFR) part or section number.
- Explain why you agree or disagree; suggest alternatives and substitute language for your requested changes.
- Describe any assumptions and provide any technical information and/or data that you used.
- If you estimate potential costs or burdens, explain how you arrived at your estimate in sufficient detail to allow for it to be reproduced.
- Provide specific examples to illustrate your concerns, and suggest alternatives.
- Explain your views as clearly as possible, avoiding the use of profanity or personal threats.
- Make sure to submit your comments by the comment period deadline identified.

*D. How is the preamble organized?*

The information presented in this preamble is organized as follows:

I. General Information
A. Does this action apply to me?
B. Where can I get a copy of this document and other related information?
C. What should I consider as I prepare my comments for EPA?
D. How is the preamble organized?
II. Overview of Proposed Rule
III. Background
A. CAA and Regulatory Context
B. State PSD SIPs
IV. Proposed Action: Finding of Substantial Inadequacy and SIP Call
A. Introduction
B. States With SIP PSD Applicability Provisions That Do Not Appear To Apply to GHG-Emitting Sources
C. States With SIP PSD Applicability Provisions That Do Appear To Apply to GHG-Emitting Sources
D. Proposed Finding of SIP Substantial Inadequacy and SIP Call; Solicitation of Comment
E. Comment Period
F. State Actions
G. EPA Actions on SIP Submittals; Findings of Failure To Submit and Promulgation of FIPs
H. Streamlining the State Process for SIP Development and Submittal
I. Primacy of the SIP Process
J. Sanctions
K. Title V
V. Statutory and Executive Order Reviews
A. Executive Order 12866—Regulatory Planning and Review
B. Paperwork Reduction Act
C. Regulatory Flexibility Act
D. Unfunded Mandates Reform
E. Executive Order 13132—Federalism
F. Executive Order 13175—Consultation and Coordination With Indian Tribal Governments
G. Executive Order 13045—Protection of Children From Environmental Health Risks and Safety Risks
H. Executive Order 13211—Actions Concerning Regulations That Significantly Affect Energy Supply, Distribution, or Use

I. National Technology Transfer and Advancement Act
J. Executive Order 12898—Federal Actions To Address Environmental Justice in Minority Populations and Low-Income Populations
VI. Statutory Authority

## II. Overview of Proposed Rule

In this rulemaking, along with the companion rulemaking described elsewhere in this preamble, EPA is taking another in a series of actions concerning the PSD program for GHG-emitting sources that will begin on January 2, 2011. These two rulemakings take steps to assure that in 13 States that do not appear to have authority to issue PSD permits to GHG-emitting sources at present, either the State or EPA will have the authority to issue PSD permits by January 2, 2011. Although for most states, either the State or EPA is already authorized to issue PSD permits for GHG-emitting sources as of that date, our preliminary information shows that these 13 States have EPA-approved PSD programs that do not appear to include GHG-emitting sources and therefore do not appear to authorize these states to issue PSD permits to such sources. In this rulemaking, EPA proposes to find that these 13 States' SIPs are substantially inadequate to comply with CAA requirements and, accordingly, proposes to issue a SIP Call to require a corrective SIP revision that applies their SIP PSD programs to GHG-emitting sources. In a companion rulemaking, EPA proposes a FIP that would give EPA authority to apply EPA's PSD program to GHG-emitting sources in case such a State is unable to submit a corrective SIP revision by its deadline.

Under the CAA PSD program, stationary sources must obtain a permit prior to undertaking construction or modification projects that would result in specified amounts of new or increased emissions of air pollutants that are subject to regulation under other provisions of the CAA. CAA sections 165(a), 169(1). The permit must, among other things, impose emission limitations associated with the best available control technology (BACT). CAA section 165(a)(4).

In recent months, EPA has taken four related actions that, taken together, trigger PSD applicability for GHG sources on and after January 2, 2011, but limit the scope of PSD. These actions included, as they are commonly called, the "Endangerment Finding" and "Cause or Contribute Finding," which were issued in a single final action,[3] the "Johnson Memo Reconsideration,"[4] the "Light-Duty Vehicle Rule,"[5] and the "Tailoring Rule."[6] Taken together, these actions established regulatory requirements for GHGs emitted from new motor vehicles and new motor vehicle engines, determined that such regulations, when they take effect on January 2, 2011, will subject GHGs emitted from stationary sources to PSD requirements, and limited the applicability of PSD requirements to GHG sources on a phased-in basis.

We are taking this action on the basis of: Our analysis of the affected States' SIP provisions and other relevant State law; the States' analyses of their SIP provisions and State law, as indicated in letters sent to us as required under the Tailoring Rule;[7] and direct consultation with the individual states and with the National Association of Clean Air Agencies (NACAA). As further described in section IV.D of this preamble, EPA compiled relevant provisions of the affected States' SIPs and other State law into a Technical Support Document for this rulemaking, which can be found in the docket for this rulemaking. Our analysis, along with information received from consulting with the states, indicates that the EPA-approved SIPs for 13 States appear to not apply the PSD program to GHG sources. In many of these states, the SIP applicability provisions apply the PSD program to sources of specifically listed air pollutants and do not include GHGs. In one State, Connecticut, the SIP explicitly precludes the application of PSD to GHG-emitting sources. In other states, the SIP applicability provisions apply the PSD program generally to regulated pollutants, and these provisions, by their terms, cover GHGs; however, these states have other constitutional, State law, or SIP provisions that may limit their State laws or SIP requirements to applying only when specifically approved by the appropriate State authority. These constitutional or statutory provisions may limit the scope of the State PSD applicability provisions expressly to pollutants identified at a certain point in time as subject to PSD. For example, if the State has not yet expressly identified GHGs as subject to its PSD program, the authority to regulate GHG-emitting sources may not exist. As a result, absent further action, GHG sources that will be required to obtain a PSD permit for construction or modification on and after January 2, 2011, will be unable to obtain that permit and therefore may be unable to proceed with planned construction or modification in those states.

In this rulemaking, we are proposing to find that under CAA section 110(k)(5), the SIP for each of these 13 States is substantially inadequate to meet the CAA PSD requirements, and we are proposing a SIP Call to require that each affected State submit a corrective SIP revision that applies the PSD program to GHG sources. These states are listed in table IV–1, "States with SIPs that Do Not Appear to Apply PSD to GHG Sources (Presumptive SIP Call List)."

As for the remaining States with EPA-approved SIP PSD programs, our preliminary research indicates that their SIP PSD applicability provisions apply the PSD programs more broadly—for example, many apply to sources of "regulated NSR pollutants"—and therefore appear to include GHG-emitting sources. Moreover, we have not to this point received information about other provisions in the State constitutional or other State or SIP law that would have the effect of limiting the applicability of the PSD provisions to exclude GHG-emitting sources. Those remaining States, which include all the states with EPA-approved PSD programs not listed in table IV–1, are listed in table IV–2, "States with SIPs that Appear to Apply PSD to GHG Sources (Presumptive Adequacy List)."

Even so, we are aware of the possibility that some of those states may also have other State law provisions that may have the effect of limiting their PSD SIP requirements to applying only to pollutants specifically approved by the appropriate State authority, which would not include GHGs. In light of this possibility, we are soliciting comment on whether each of those remaining States' SIPs (*see* table IV–2) apply PSD to GHG-emitting sources. If, for any such State, we receive information that leads us to conclude that its SIP does not apply PSD to GHG-emitting sources, we will take final action to issue a

[3] "Endangerment and Cause or Contribute Findings for Greenhouse Gases Under Section 202(a) of the Clean Air Act." 74 FR 66496 (December 15, 2009).

[4] "Interpretation of Regulations that Determine Pollutants Covered by Clean Air Act Permitting Programs." 75 FR 17004 (April 2, 2010). This action finalizes EPA's response to a petition for reconsideration of "EPA's Interpretation of Regulations that Determine Pollutants Covered by Federal Prevention of Significant Deterioration (PSD) Permit Program" (commonly referred to as the "Johnson Memo"), December 18, 2008.

[5] "Light-Duty Vehicle Greenhouse Gas Emission Standards and Corporate Average Fuel Economy Standards; Final Rule." 75 FR 25324 (May 7, 2010).

[6] "Prevention of Significant Deterioration and Title V Greenhouse Gas Tailoring Rule; Final Rule." 75 FR 31514 (June 3, 2010).

[7] In the Tailoring Rule, EPA asked states to advise EPA by letter, within 60 days of publication of the Tailoring Rule, how the states intended to implement the requirements of the Tailoring Rule, including whether the states had authority to apply their PSD program to GHG-emitting sources.

finding of substantial inadequacy and a SIP Call for that State, on the same schedule as that for the 13 States.

In a companion action to this rulemaking, we are proposing to promulgate, in any State that is not in a position to make a timely submittal of the corrective SIP revision, a FIP that will assure that sources will be able to obtain the necessary permits, with EPA as the permitting authority for GHG emissions.

In view of the need for prompt action to eliminate or significantly limit any time period during which certain GHG sources are precluded from constructing or modifying because no entity has the authority to issue them permits, we intend to finalize this rulemaking action on or about December 1, 2010, and we propose in this rulemaking to give states a deadline of 12 months from the date we finalize to submit their corrective SIP revision. However, we are also proposing to authorize states to accept a shorter deadline, as short as three weeks from the date we finalize. If any State is not able to submit a corrective SIP revision by its deadline, then EPA, by virtue of the authority of the FIP provisions under CAA section 110(c), will immediately make a finding that the State has failed to submit the required SIP revision and will immediately promulgate the FIP.

Some states may already be in the process of developing the legal authority needed and may be able to submit a SIP revision sooner than December 2010. EPA encourages states to take action as expeditiously as possible and will assist states as much as possible. Therefore, for each State for which EPA is proposing a SIP Call, it is possible that by January 2, 2011, when certain GHG sources in the State may be required to obtain PSD permits, the State would have the authority in place to act on the sources' permit applications. The availability of this authority to regulate GHGs would depend on whether the State submits a SIP revision before EPA finalizes this action or, alternatively, on which deadline the State receives for the corrective SIP submittal.

We ask that, within the comment period for this action, each of the states listed in table IV–1 confirm to EPA that its SIP does not apply the PSD program to GHG-emitting sources. We also ask that within this comment period, every other State in the nation with an approved SIP (*see* table IV–2) review its SIP and inform EPA if its SIP does not apply the PSD program to GHG-emitting sources. Further, we ask that the states (*see* table IV–1) for which we are proposing a SIP Call identify the deadline—between 3 weeks and 12 months from the date of signature of the final SIP Call—that they would accept for submitting their corrective SIP revision. For example, assuming that, as we anticipate, this rulemaking is signed in final form by December 1, 2010, a State may specify that it would accept a SIP submittal deadline that falls between December 22, 2010, and December 1, 2011, inclusive.

## III. Background

### *A. CAA and Regulatory Context*

EPA described the relevant background information in the Tailoring Rule. Knowledge of this background information is presumed and will be only briefly summarized here.

#### 1. SIP PSD Requirements

Under the CAA PSD requirements, a new or existing source that emits or has the potential to emit "any air pollutant" in the amounts of either 100 or 250 tons per year (tpy), depending on the source category, cannot construct or modify unless it first obtains a PSD permit that, among other things, imposes emission limitations that qualify as BACT. CAA sections 165(a)(1), 165(a)(4), 169(1). Longstanding EPA regulations have interpreted the term "any air pollutant" narrowly so that only emissions of any "regulated NSR pollutant" trigger PSD. 40 CFR 51.166(j)(1), 52.21(j)(2). The term "regulated NSR pollutant" is defined to include the following four classes of air pollutants:

(i) Any pollutant for which a NAAQS has been promulgated;

(ii) any pollutant subject to an NSPS promulgated under CAA section 111;

(iii) any pollutant subject to a standard promulgated under CAA title VI; and

(iv) "any pollutant that otherwise is subject to regulation under the Act" (excluding HAPs listed under CAA section 112). 40 CFR 51.166(b)(49), 52.21(b)(50).

The CAA contemplates that the PSD program be implemented in the first instance by the states and requires that states include PSD requirements in their SIPs. CAA section 110(a)(2)(C) requires that—

> Each implementation plan * * * shall * * * include a program to provide for * * * regulation of the modification and construction of any stationary source within the areas covered by the plan as necessary to assure that national ambient air quality standards are achieved, including a permit program as required in part[] C * * * of this subchapter.

CAA section 110(a)(2)(J) requires that—

> Each implementation plan * * * shall * * * meet the applicable requirements of * * * part C of this subchapter (relating to significant deterioration of air quality and visibility protection).

CAA section 161 provides that—

> Each applicable implementation plan shall contain emission limitations and such other measures as may be necessary, as determined under regulations promulgated under this part [C], to prevent significant deterioration of air quality for such region * * * designated * * * as attainment or unclassifiable.

These provisions, read in conjunction with the PSD applicability provision—which, as noted above, applies, by its terms, to "any air pollutant," and which EPA has, through regulation, interpreted more narrowly as any "NSR regulated pollutant"—and read in conjunction with other provisions, such as the BACT provision under CAA section 165(a)(4), mandate that SIPs include PSD programs that are applicable to, among other things, any air pollutant that is subject to regulation, including, as discussed below, GHGs on and after January 2, 2011.[8]

A number of states do not have PSD programs approved into their SIPs. In those states, EPA's regulations at 40 CFR 52.21 govern, and either EPA or the State as EPA's delegatee acts as the permitting authority. On the other hand, most states have PSD programs that have been approved into their SIPs, and these states implement their PSD programs and act as the permitting authority. These approved SIPs are discussed in more detail below.

#### 2. Recent EPA Regulatory Action Concerning PSD Requirements for GHG-emitting Sources

By notice dated December 15, 2009, pursuant to CAA section 202(a), EPA issued, in a single final action, two findings regarding GHGs that are commonly referred to as the "Endangerment Finding" and the "Cause or Contribute Finding." "Endangerment and Cause or Contribute Findings for Greenhouse Gases Under Section 202(a) of the Clean Air Act," 74 FR 66496. In the Endangerment Finding, the Administrator found that six long-lived and directly emitted greenhouse gases—carbon dioxide ($CO_2$), methane ($CH_4$),

[8] In the Tailoring Rule, we noted that commenters argued, with some variations, that the PSD provisions applied only to NAAQS pollutants, and not GHGs, and we responded that the PSD provisions apply to all pollutants subject to regulation, including GHGs. *See* 75 FR 31560–62, "Prevention of Significant Deterioration and Title V GHG Tailoring Rule: EPA's Response to Public Comments," May 2010, pp. 38–41. We maintain our position that the PSD provisions apply to all pollutants subject to regulation, and we incorporate by reference our discussion of this issue in the Tailoring Rule.

nitrous oxide ($N_2O$), hydrofluorocarbons (HFCs), perfluorocarbons (PFCs), and sulfur hexafluoride ($SF_6$)—may reasonably be anticipated to endanger public health and welfare. In the Cause or Contribute Finding, the Administrator "define[d] the air pollutant as the aggregate group of the same six * * * greenhouse gases," 74 FR 66536, and found that the combined emissions of this air pollutant from new motor vehicles and new motor vehicle engines contribute to the GHG air pollution that endangers public health and welfare.

By notice dated May 7, 2010, EPA published what is commonly referred to as the "Light-Duty Vehicle Rule" (LDVR), which for the first time established Federal controls on GHGs emitted from light-duty vehicles. "Light-Duty Vehicle Greenhouse Gas Emission Standards and Corporate Average Fuel Economy Standards; Final Rule." 75 FR 25324. In its applicability provisions, the LDVR specifies that it "contains standards and other regulations applicable to the emissions of six greenhouse gases," including $CO_2$, $CH_4$, $N_2O$, HFCs, PFCs, and $SF_6$. 75 FR 25686 (40 CFR 86.1818–12(a)).

Shortly before finalizing the LDVR, by notice dated April 2, 2010, EPA published a notice commonly referred to as the Johnson Memo Reconsideration, which interpreted the term "subject to regulation," a term that is one of the regulatory triggers for PSD applicability.[9] The Johnson Memo Reconsideration concluded that for GHGs, promulgation of the LDVR would trigger PSD applicability for GHG-emitting sources on or after January 2, 2011, which according to EPA is the date upon which the LDVR takes effect.

By notice dated June 3, 2010, EPA published what is commonly referred to as the "Tailoring Rule,"[10] which limits the applicability of PSD through a multi-step phase-in approach to only the highest-emitting GHG-emitting sources for a specified period of time, and not all GHG-emitting sources at the 100/250-tpy statutory thresholds. The Tailoring Rule established the first two steps of the approach, which take effect on January 2, 2011, and July 1, 2011, respectively. In the Tailoring Rule, EPA codified the Johnson Memo Reconsideration interpretation of the term "subject to regulation" and added a further interpretation of that term designed to expedite the adoption of the phase-in approach for PSD permitting for GHGs by the states into their SIPs. In addition, in the Tailoring Rule, EPA identified the air pollutant that, if emitted or potentially emitted by the source in excess of specified thresholds, would subject the source to PSD requirements, as the aggregate of the six GHGs, again, $CO_2$, $CH_4$, $N_2O$, HFCs, PFCs, and $SF_6$. The Tailoring Rule further provided that for purposes of determining whether the GHGs emitted (or potentially emitted) exceeded the specified thresholds, the amount of the GHGs must be calculated first on a mass emissions basis and then on a carbon dioxide equivalent ($CO_2e$) basis. With respect to the latter, according to the rule, "PSD * * * applicability is based on the quantity that results when the mass emissions of each of these [six] gases is multiplied by the Global Warming Potential (GWP) of that gas, and then summed for all six gases." 75 FR 31518. In the Tailoring Rule, we asked states to submit to us letters within 60 days of publication describing how they intended to incorporate into their SIPs the limitations on PSD applicability included in the rule's phase-in approach.

Further information on the Endangerment and Cause or Contribute Findings, the LDRV, the Johnson Memo Reconsideration, and the Tailoring Rule is contained in the Tailoring Rule.

*3. SIP Inadequacy and Corrective Action*

The CAA provides a mechanism for the correction of flawed SIPs, under CAA section 110(k)(5), which provides:

(5) Calls for plan revisions

Whenever the Administrator finds that the applicable implementation plan for any area is substantially inadequate to * * * comply with any requirement of this Act, the Administrator shall require the State to revise the plan as necessary to correct such inadequacies. The Administrator shall notify the State of the inadequacies and may establish reasonable deadlines (not to exceed 18 months after the date of such notice) for the submission of such plan revisions.

This provision by its terms authorizes the Administrator to "find[] that [a SIP] * * * is substantially inadequate to * * * comply with any requirement of this Act," and, based on that finding, to "require the State to revise the [SIP] * * * to correct such inadequacies." This latter action is commonly referred to as a "SIP Call." In addition, this provision provides that EPA must notify the State of the substantial inadequacy and authorizes EPA to establish a "reasonable deadline[] (not to exceed 18 months after the date of such notice)" for the submission of the corrective SIP revision.

If the State fails to submit the corrective SIP revision by the deadline, CAA section 110(c) authorizes EPA to "find[] that [the] State has failed to make a required submission." CAA section 110(c)(1)(A). Once EPA makes that finding, CAA section 110(c)(1) requires EPA to "promulgate a Federal implementation plan at any time with 2 years after the [finding] * * * unless the State corrects the deficiency, and [EPA] approves the plan or plan revision, before [EPA] promulgates such [FIP]."

*B. State PSD SIPs*

1. SIP PSD Applicability Provisions

As noted earlier in this preamble, most states have approved PSD SIPs. Most of those SIPs identify the pollutants addressed under their PSD program as any "regulated NSR pollutant." This definition covers any "pollutant subject to regulation" and therefore, by its terms, in effect is automatically updating and needs no revision in order to cover pollutants that become subject to regulation under the CAA. As a result, these provisions cover GHG emissions when they become subject to regulation under other provisions of the CAA. *See* 40 CFR 52.21(b)(50).

However, EPA has become aware that a minority of approved SIPs fail to include this broad approach to identifying pollutants subject to PSD and instead simply list the individual pollutants by name. These SIPs do not identify GHGs as among the pollutants addressed under their PSD program. As a result, these applicability provisions, by their terms, do not appear to apply the PSD requirements to sources of GHGs when GHGs become "subject to regulation" under the CAA on January 2, 2011.

In addition, the PSD SIP applicability provisions of one State that we are aware of, Connecticut, explicitly excludes $CO_2$ as an "air pollutant," so that $CO_2$ is not subject to PSD requirements.

2. Other Relevant State Law Provisions

Some states may have other State laws, including other SIP provisions that bear upon the applicability of their PSD programs to GHG-emitting sources.

First, some states may have in their SIPs some sort of "general authority clause" that affirms the State's legal authority to issue, and enforce

[9] "Interpretation of Regulations that Determine Pollutants Covered by Clean Air Act Permitting Programs," 75 FR 17004 (finalizing EPA's response to a petition for reconsideration of "EPA's Interpretation of Regulations that Determine Pollutants Covered by Federal Prevention of Significant Deterioration (PSD) Permit Program" (commonly referred to as the "Johnson Memo"), December 18, 2008).

[10] Prevention of Significant Deterioration and Title V Greenhouse Gas Tailoring Rule; Final Rule. 75 FR 31514 (June 3, 2010).

compliance with, permits that are consistent with Federal requirements. If one of the states listed in table IV–1 of this preamble as having a SIP that does not explicitly apply PSD to GHG emitters nevertheless has such a "general authority clause," then the SIP, read as a whole, may be considered to apply PSD to GHG sources.

For an example of the type of "general authority clause" that may have this effect, we refer to correspondence between the California Bay Area Air Quality Management District (BAAQMD) and EPA Region IX that is included in the docket for this rulemaking. In a letter dated October 28, 2009, the BAAQMD proposed to exercise general authority in order to issue air permits to sources of $PM_{2.5}$ even though its air permit regulations did not contain specific provisions for $PM_{2.5}$ emissions. Under the proposed approach, with which EPA concurred, BAAQMD exercised general authority under the administrative requirements within its air permit regulations, which provide that the Air Pollution Control Officer "may impose any permit condition that he deems reasonably necessary to insure compliance with Federal or California law or District regulations * * *." *See* Regulation 2–1–403 included in the docket for this rulemaking.

Second, some states may have, in their SIPs, statutes, or constitutions, a provision that precludes "forward adoption," that is, that prevents the State law from incorporating by reference or otherwise adopting any requirements not specifically adopted by the State legislature or other State authority. In particular, some states may include a SIP PSD applicability provision that incorporates by reference (IBR) our Federal PSD rule at 40 CFR 52.21—including the definition of "regulated NSR pollutant"—but that further provides that this IBR is not "rolling" and therefore is limited to only pollutants identified as regulated NSR pollutants as of the date the State adopted the PSD provision. Any of these provisions could limit the SIP PSD applicability rule to only the pollutants that were regulated as of the time the State adopted the PSD applicability rule, which means the SIP PSD program would not cover GHG-emitting sources until the State took specific action to that effect.

## IV. Proposed Action: Finding of Substantial Inadequacy and SIP Call

### *A. Introduction*

Beginning on January 2, 2011, certain stationary sources that construct or undertake modifications will become subject to the CAA requirement to obtain a PSD permit for their GHG emissions. This is because of the following CAA statutory and EPA regulatory requirements: Under CAA sections 165(a) and 169(1), as interpreted through longstanding EPA regulations, PSD applies to sources that emit specified amounts of "regulated NSR pollutants," which include specified air pollutants as well any other "[air] pollutant" that is "subject to regulation." 40 CFR 51.166(j)(1), (b)(49)(iv). By notice dated May 7, 2010, EPA promulgated the Light-Duty Vehicle Rule (LDVR), which establishes requirements for GHGs. 75 FR 25324. By the terms of the LDVR, these emission limits take effect on January 2, 2011. The LDVR identified the GHGs to which it applies as a single air pollutant that consists of $CO_2$, $CH_4$, $N_2O$, HFCs, PFCs, and $SF_6$. The LDVR followed EPA's Endangerment and Cause or Contribute Findings, issued by notice dated December 15, 2009, by which EPA found that GHGs—defined to include the same six constituents—may reasonably be anticipated to endanger public health and welfare. By notice dated April 2, 2010, EPA promulgated the Johnson Memo Reconsideration. 75 FR 17004. In this action, EPA made clear that the regulation of GHGs by the LDVR will trigger the applicability of PSD requirements to GHG-emitting stationary sources as of January 2, 2011, because GHGs will become "subject to regulation" through the LDVR. By notice dated June 3, 2010, EPA promulgated the Tailoring Rule, which narrows PSD applicability to specified GHG-emitting sources on a specified phase-in schedule and makes clear that GHGs—defined as the same single pollutant, with six constituent gases, as described in the LDVR—are the "[air] pollutant" to which PSD requirements apply. 75 FR 31514. Pursuant to the Tailoring Rule, PSD permitting requirements for construction or modification will apply to certain GHG-emitting stationary sources beginning on January 2, 2011, for the first step of the Tailoring Rule, and beginning on July 1, 2011, for the second step of the Tailoring Rule.

A number of states do not have an approved PSD SIP; as a result, in these states [11] the applicable regulatory authority is EPA's regulations, found in 40 CFR 52.21, which constitute a FIP. For sources in these states, either the EPA Regional Office or the State acting as EPA's delegatee is the permitting authority. Because EPA's regulations apply directly, sources in these states that emit GHGs will become subject to PSD for their GHG emissions, to the extent provided under the Tailoring Rule, on January 2, 2011. These sources will be able, on and after January 2, 2011, to apply for and receive in due course their PSD permits either from EPA directly or from those State permitting authorities acting on EPA's behalf.

All of the other states administer their PSD program through an approved SIP and, as a result, they or their local entities are the PSD permitting authority. This rulemaking concerns whether those approved SIP PSD programs include GHG-emitting sources and, for those that do not, the steps that EPA will take to assure that a PSD permit program that includes GHGs is in place.

### *B. States With SIP PSD Applicability Provisions That Do Not Appear To Apply to GHG-Emitting Sources*

Our review of the SIPs and other authorities, as well as consultation with states, as described further in section IV.D of this preamble and the Technical Support Document included in the docket for this rulemaking, indicates that for 13 of the states with approved PSD SIPs, the PSD programs of their SIPs do not appear to apply to GHG-emitting sources. These states are listed in table IV–1, "States with SIPs that Do Not Appear to Apply PSD to GHG Sources (Presumptive SIP Call List)." In a number of these SIPs, the PSD applicability provisions do not mirror EPA's regulatory provisions by applying PSD requirements to sources of any air pollutant "subject to regulation"; instead, the PSD applicability provisions specifically list the air pollutants to which the PSD program applies and do not include GHGs on that list. As a result, the PSD applicability provisions do not, by their terms, cover GHG-emitting sources.

In addition, Connecticut's SIP appears by its terms to preclude the application of PSD to GHG-emitting sources.

Further, some of these states have SIP PSD provisions that by their terms apply PSD to regulated NSR pollutants, or

[11] In the following listed State or local jurisdictions, as well as in all Indian country, EPA is the PSD permitting authority, implementing the Federal PSD regulation at 40 CFR 52.21: American Samoa; Arizona (some areas); California (most areas); District of Columbia; Guam; Massachusetts; New Jersey; New York; Northern Mariana Islands; Puerto Rico; Trust Territories; and the Virgin Islands. In a smaller number of areas, listed as follows, the State or local permitting authority is delegated at least partial authority by EPA to implement the Federal PSD regulation: Arizona (some areas); California (some areas); Hawaii; Illinois; Minnesota; Nevada (most areas); Pennsylvania (some areas); and Washington.

have a substantially similarly phrased requirement, but also have State constitutional or other statutory or SIP provisions that appear to have the effect of limiting PSD applicability to air pollutants identified on a certain date. Therefore, State law, read as whole, would not appear to apply PSD requirements to GHGs until the appropriate State authority takes action to specifically subject PSD to GHGs, and the State has not yet done so.

We conclude that the states with SIPs or State law with these provisions do not appear to apply the PSD program to GHG-emitting sources, and we are including them in table IV–1. We recognize that stakeholders may have other interpretations of these provisions, and we solicit comments from stakeholders on their interpretations. In addition, some of these SIPs may include what we will refer to as a "general authority provision," which is a provision for the State to issue PSD permits that comply with EPA requirements, as described earlier in this preamble. If so, it is possible that these provisions could be interpreted to authorize the State in some cases to issue to GHG sources PSD permits that incorporate EPA's regulatory requirements, as found in 40 CFR 51.166. As a result, we consider table IV–1 to be a presumptive SIP Call list.

TABLE IV–1—STATES WITH SIPS THAT DO NOT APPEAR TO APPLY PSD TO GHG SOURCES (PRESUMPTIVE SIP CALL LIST)

| State (or area) | EPA region |
|---|---|
| Alaska | X |
| Arizona: Pinal County; Rest of State (Excludes Maricopa County, Pima County, and Indian Country) | IX |
| Arkansas | VI |
| California: Sacramento Metropolitan AQMD | IX |
| Connecticut | I |
| Florida | IV |
| Idaho | X |
| Kansas | VII |
| Kentucky: Jefferson County; Rest of State | IV |
| Nebraska | VII |
| Nevada: Clark County | IX |
| Oregon | X |
| Texas | VI |

*C. States With SIP PSD Applicability Provisions That Do Appear To Apply to GHG-Emitting Sources*

On the other hand, as noted above, for most of the states with approved SIPs, those SIPs generally apply PSD to sources of any "regulated NSR pollutant," and we have not received information indicating that the State law includes other provisions that may have the effect of precluding PSD from applying to GHG-emitting sources. As a result, EPA is including a list of states with presumptively adequate SIPs in table IV–2, "States with SIPs That Appear To Apply PSD to GHG Sources (Presumptive Adequacy List)."

TABLE IV–2—STATES WITH SIPS THAT APPEAR TO APPLY PSD TO GHG SOURCES (PRESUMPTIVE ADEQUACY LIST)

| State (or area) | EPA region |
|---|---|
| Alabama: Jefferson County; Huntsville; Rest of State | IV |
| California: Mendocino County AQMD; Monterey Bay Unified APCD; North Coast Unified AQMD; Northern Sonoma County APCD | IX |
| Colorado | VIII |
| Delaware | III |
| Georgia | IV |
| Indiana | V |
| Iowa | VII |
| Louisiana | VI |
| Maine | I |
| Maryland | III |
| Michigan | V |
| Mississippi | IV |
| Missouri | VII |
| Montana | VIII |
| New Hampshire | I |
| New Mexico: Albuquerque; Rest of State | VI |
| North Carolina: Forsythe County; Mecklenburg; Western NC; Rest of State | IV |
| North Dakota | VIII |
| Ohio | V |
| Oklahoma | VI |
| Pennsylvania: All except Allegheny County | III |
| Rhode Island | I |
| South Carolina | IV |
| South Dakota | VIII |
| Tennessee: Chattanooga; Nashville; Knoxville; Memphis; Rest of State | IV |
| Vermont | I |
| Virginia | III |

TABLE IV–2—STATES WITH SIPS THAT APPEAR TO APPLY PSD TO GHG SOURCES (PRESUMPTIVE ADEQUACY LIST)—Continued

| State (or area) | EPA region |
|---|---|
| West Virginia | III |
| Wisconsin | V |
| Wyoming | VIII |
| Utah | VIII |

We have developed these two lists of states—one listing states whose PSD program appears to not apply to GHG-emitting sources and one listing states whose program appears to cover such sources—based on our own preliminary research, consultation with states, and review of the 60-day letters, described earlier in this preamble, submitted thus far by states in response to the Tailoring Rule. As explained elsewhere in this preamble, we ask that each State with an approved SIP submit information during the comment period for this rulemaking pertinent to whether its SIP—including the PSD applicability provisions and any other relevant provisions—covers GHG-emitting sources.

*D. Proposed Finding of SIP Substantial Inadequacy and SIP Call; Solicitation of Comment*

For each of the states listed in table IV–1 of this preamble, we propose to issue a finding that the SIP is "substantially inadequate * * * to * * * comply with [the PSD] requirement[s]" and to "require the State to revise the plan as necessary to correct such inadequacies," *i.e.,* to issue a SIP Call. CAA section 110(k)(5). For each of these states, the SIP appears to not apply the PSD program to GHG-emitting sources.

In consultation with the affected states, EPA compiled relevant provisions of the affected States' SIPs and other State law into a Technical Support Document for this rulemaking. The Technical Support Document, which can be found in the docket for this rulemaking, presents the basis for EPA's proposed finding of substantial inadequacy for the states listed in table IV–1.

As discussed elsewhere in this preamble, we invite comment on this proposal. For any State listed in table IV–1, if we do not receive any further information from the State or other commenters, we expect to finalize our proposed finding and SIP Call. Also for any State listed in table IV–1, if we do receive additional information that our interpretation of these provisions is incorrect or that the SIP includes a general authority provision so that, read as a whole, the SIP applies the PSD program to GHG sources, we will not finalize our proposed finding and SIP Call.

Our basis for the proposed finding—and the proposed SIP Call that is based on this finding—is that CAA section 110(k)(5) provides that EPA may make the finding when the SIP is "substantially inadequate * * * to * * * comply with any requirement of [the CAA]," and this includes the PSD requirements. As discussed earlier in this preamble, SIPs are required to include PSD programs that apply to sources that emit pollutants subject to regulation; as a result, the SIPs at issue merit a finding of substantial inadequacy because they fail to apply the PSD program to GHG-emitting sources on and after January 2, 2011.

For all other states with approved PSD SIPs—which are the ones listed in table IV–2—we solicit comment on whether their SIPs, read as a whole, apply the PSD program to GHG-emitting sources. If, on the basis of additional information, we conclude that their PSD programs do not apply to GHG-emitting sources, we will issue a final finding of substantial inadequacy and SIP Call on the same schedule as that for any of the states for which we are issuing a proposed finding and SIP Call.

We recognize that PSD requirements will not apply to GHG-emitting sources until January 2, 2011, but that for any State for which we finalize a finding of substantial inadequacy and a SIP Call, our plan is to do so approximately one month in advance of that date. EPA believes this timing is justified. SIPs must include, at least a month prior to January 2, 2011, a provision applying PSD requirements to GHG-emitting sources as of January 2, 2011, in order to give sources notice that the requirement applies and that the State will act as the permitting authority. We recognize that as a practical matter, some states may wish that we impose a FIP effective as of January 2, 2011, in order to avoid any period of time when the GHG-emitting sources identified in the Tailoring Rule as subject to PSD are unable to obtain a permit due to lack of a permitting authority. We cannot impose a FIP until we have first finalized the SIP Call and given the State a reasonable period of time to make the corrective SIP submission. EPA strongly believes that this necessarily entails, for those states, finalizing the SIP Call prior to January 2, 2011.

After the close of the comment period for this proposed action, we will review all comments. If we determine that the PSD SIP for any State either by its terms does not apply to sources of GHGs or has conflicting provisions that create ambiguity as to whether it applies to sources of GHGs (such as an applicability provision that explicitly excludes GHG sources, coupled with a general-authority provision that could be read to authorize permitting of GHG sources), then, for that State, we will finalize the finding that the SIP is "substantially inadequate * * * to * * * comply with [the PSD] requirement[s]." At the same time, we will finalize a SIP Call for that State. We will make the finding of substantial inadequacy, notify the State that we have made the finding, and issue the SIP Call in a final action that we intend to sign on or about December 1, 2010, and submit for publication in the **Federal Register** as soon as possible thereafter. We will notify the State of the finding of substantial inadequacy by letter and by posting the signed action on our Web Site. In view of the urgency of the task, which is to ensure that a PSD permitting authority for affected GHG sources is in place by January 2, 2011, we propose to give the final SIP Call an effective date of its publication date. We recognize that this process is highly expedited, but we believe that this is essential to maximize our and the States' opportunity to put in place a permitting authority to process PSD permit applications beginning on January 2, 2011, without which sources may be unable to proceed with plans to construct or modify. Commenters should feel free to advise us if they believe a different approach can achieve this goal.

*E. Comment Period*

In order to deepen our understanding of what provisions are in the relevant PSD SIPs, and how they are to be interpreted, as well as to ensure that we have a comprehensive picture of all the SIPs in this regard, we ask each State to give us the following information by the close of the comment period on this rule:

1. States With SIP PSD Applicability Provisions That Do Not Appear To Include GHGs

We ask that each of the states listed in table IV–1 of this preamble—for which we have information that their SIP PSD applicability provisions do not include GHGs, and for which we propose a finding of substantial inadequacy and a SIP Call—provide the following information by the end of the comment period for this action:

(a) Confirm, with citations and a copy of the relevant language, that the SIP PSD applicability provisions do not explicitly include GHG sources;

(b) Identify and provide a copy of any provision that specifically precludes PSD applicability for GHG sources;

(c) Identify and provide a copy of any provision of State constitution or other law, including the SIP, that may be read to limit the applicability of the PSD program to pollutants identified at a certain point in time, and therefore not to GHGs.

(d) Indicate, with citations and a copy of the relevant language, if any, whether the SIP includes general authority for the State to issue PSD permits that meet EPA requirements;

(e) Indicate, with citations and a copy of the relevant language, any other provisions of the SIP or State law that may bear on the applicability of the PSD program to GHG-emitting sources.

(f) Indicate the State's interpretation as to whether the SIP, read as a whole, does or does not apply the PSD program to GHG sources or authorize the State to issue PSD permits for GHG sources that meet EPA requirements. This statement should be made by the commissioner or general counsel of the State environmental agency, or by the counterpart at the local or tribal level, or by the State Attorney General.

(g) If the SIP, read as a whole, does not apply the PSD program to GHG sources or authorize the issuance of permits to GHG sources, indicate whether the State plans to develop adequate authority to apply the PSD program to GHG sources and to submit it to EPA as a SIP revision by December 1, 2010, which is shortly before the date on which, as discussed below, EPA intends to finalize its finding of inadequacy and finalize the SIP Call.

As discussed later in this preamble, we also ask these states to inform us, by the end of the comment period, of the period of time (as bounded in this preamble) that they would accept as the deadline for submittal of their SIP revisions in response to a SIP Call.

2. All Other States With Approved SIPs

We request that each State with an approved PSD SIP (see table IV–2) that is not also one of the 13 States for which we propose a SIP Call review its PSD provisions to confirm that it applies the PSD program to GHG sources. We request that each of these states inform us if it has a SIP PSD applicability provision that does not by its terms apply to pollutants "subject to regulation" or similar language, or otherwise apply to GHG sources. In addition, we request that each of these states inform us if it has another State law provision or legal interpretation that may have the effect of limiting PSD applicability to air pollutants covered by EPA's PSD program as of a certain date, and therefore does not include GHGs. For any State whose PSD program, for any of these reasons, may not apply to GHG-emitting sources, we request the same information described in section IV.E.1 of this preamble as soon as possible during the comment period. Once we receive this information, if we believe it shows that the State's SIP PSD program does not apply to GHG sources, we will finalize a finding of substantial inadequacy and a SIP Call on the same schedule as any of the states for which we are proposing a finding and SIP Call.

*F. State Actions*

1. State Submission of SIP Revision Prior to Final SIP Call

If a State for whose SIP we propose a finding of substantial inadequacy submits a SIP revision by December 1, 2010, that purports to correct that inadequacy, we will not finalize the finding or SIP Call for that State. Rather, we will take action on their SIP submission promptly, as discussed below.

2. State Response to SIP Call

a. Timing of State Submittal

Under CAA section 110(k)(5), in notifying the State of the finding of substantial inadequacy and issuing the SIP Call, we "may establish reasonable deadlines (not to exceed 18 months after the date of such notice) for the submission of such plan revisions." We propose to allow the State 12 months from the date of the notice, which will be the date on which we sign the final action, to submit the SIP revision, unless, during the comment period, the State expressly advises that it would not object to a shorter period—as short as 3 weeks from the date of signature of the final rule—in which case we will establish the shorter period as the deadline. As stated earlier in this preamble, EPA intends to finalize the SIP Call on or about December 1, 2010. If the Administrator signs the notice on that date, the earliest possible deadline would be December 22, 2010. The purpose of establishing the shorter period as the deadline—assuming that State advises us that it does not object to that shorter period—is to accommodate states that wish to ensure that a FIP is available as, in effect, a backstop to ensure that there is no gap in PSD permitting. If the State does not advise us that it does not object to a shorter deadline, then the 12-month deadline will apply.

It must be emphasized that for any State that receives a deadline after January 2, 2011, the affected GHG-emitting sources in that State—which are those larger GHG-emitters identified in the Tailoring Rule—will be unable to receive a federally approved permit authorizing construction or modification. Therefore, after January 2, 2011, these sources may not lawfully be able to construct or modify until the date that EPA either approves the SIP submittal or promulgates a FIP.

EPA proposes that this 3-week-to-12-month time period, although expedited, meets the CAA section 110(k)(5) requirement as a "reasonable deadline[]" and we welcome comment on this interpretation. The term "reasonable deadline[]," as it appears in that provision, is not defined. We interpret it to mean a time period that is sensible or logical, based on all the facts and circumstances. Those facts and circumstances include (i) the State SIP development and submission process, (ii) the imperative to minimize the period when sources will be subject to PSD but not have available a PSD permitting authority to act on their permit application, and therefore will be unable to construct or modify; and (iii) the preferences of the State. The following elaborates on those three facts and circumstances.

First, although the 12-month period is consistent with the time period required for SIP revisions in at least one previous SIP call that EPA issued, the NOx SIP

Call,[12] we recognize that a period shorter than 12 months is expedited in light of the time involved in most State SIP development and submission processes. In particular, we recognize that some states may need to undertake full-blown rulemaking actions, which may typically be time-consuming, and we acknowledge that some states may need to change their statutory provisions, which may typically be even more time-consuming. Even so, we understand that at least some states have emergency processes that may be used to significantly expedite action. Although this is a matter of State process, we are prepared, as described elsewhere in this preamble, to work with the states to develop expedited methods for developing, processing, and submitting SIP revisions.

Second, the need to minimize the period when sources may be unable to construct or modify due to the lack of regulatory authority to act on their permit applications is an essential consideration. A shorter period for SIP submittal means that either the State, through the SIP revision that it submits on an expedited basis in light of this tight schedule, or EPA, through a FIP, will become the permitting authority sooner and will then be able to act on permit applications and issue permits that allow new construction and modification of existing plants. The purposes of the PSD provisions include both the protection of the environment and the promotion of economic development, *see, e.g.,* CAA section 160(3)–(4), and the D.C. Circuit has held that the terms of the PSD provisions should be interpreted with these goals in mind. *New York* v. *EPA, 413 F.3d 3, 23(D.C. Cir.), rehearing en banc den.,* 431 F.3d 801 (2005). Accordingly, determining a "reasonable deadline[]" for the submittal of a PSD SIP revision should account for the need to promote economic development by assuring the availability of a permitting authority to process permit applications.

Finally, the preference of the State is important because the deadline for submittal of the corrective SIP revision in response to a SIP Call acts as a burden on the State. If the State does not object to an earlier deadline under which it must operate—which, in a sense, is contrary to the State's self-interest because an earlier deadline typically increases burdens—then that is an indication of the reasonableness of the deadline.

[12] "Finding of Significant Contribution and Rulemaking for Certain States in the Ozone Transport Assessment Group Region for Purposes of Reducing Regional Transport of Ozone; Rule." 63 FR 57356 (October 27, 1998).

We suggest the following model language that a State wishing to indicate that it does not object to a deadline shorter than 12 months could consider using in its response to our request for comments. Of course, the State is not obligated to use this specific language, and we present it solely for the convenience of the states:

> U.S. EPA has proposed a finding of substantial inadequacy and SIP Call under Clean Air Act section 110(k)(5) concerning the State's SIP PSD applicability provisions. Further, U.S. EPA has proposed a deadline for the State's submittal of a corrective SIP revision. U.S. EPA has requested the State's comments on the proposed deadline. In light of EPA's perception of the importance of having in place as soon as possible a PSD permitting authority for any GHG-emitting sources that may be subject to PSD requirements, the State does not object to U.S. EPA's establishment of a deadline of [identify the deadline].

b. Substance of State Submittal

*(i) Addition of GHGs to List of Pollutants Subject to PSD*

We propose to make a finding of substantial inadequacy and issue a SIP Call for each State whose SIP fails to apply the PSD program to GHG-emitting sources. Accordingly, for the State to correct its SIP, the State must submit a SIP revision that applies PSD to GHG sources. For those states whose SIP applies PSD to listed air pollutants, the State may accomplish this correction in at least two different ways. First, the State may revise its SIP so that instead of applying PSD to sources of individually listed pollutants, the SIP applies PSD to sources that emit any "regulated NSR pollutant." We recommend that states follow this approach. It is consistent with our 2002 "NSR Reform" rule. "Prevention of Significant Deterioration (PSD) and Nonattainment New Source Review (NSR); Final Rule and Proposed Rule," 67 FR 80186, 80240 (December 31, 2001). In addition, it would resolve any issues about whether the State has authority to issue permits for sources of $PM_{2.5}$ emissions, as well as permits for sources of pollutants that EPA may subject to regulation for the first time in the future. Secondly, and as an alternative, the State may retain its approach of applying PSD to sources of individually listed pollutants but submit a SIP revision that includes GHGs on that list of pollutants. If a State chooses this second approach, we will approve the SIP revision as SIP strengthening.

*(ii) Definition and Calculation of Amount of GHGs*

In adding GHGs to the list of pollutants subject to PSD applicability, the State must define GHGs as a single pollutant that is the aggregate of the group of six gases: $CO_2$, $CH_4$, $N_2O$, HFCs, PFCs, and $SF_6$. As EPA stated in the Tailoring Rule, "[t]he final LDVR for GHGs specifies, in the rule's applicability provisions, the air pollutant subject to control as the aggregate group of the six GHGs * * *. Because it is this pollutant that is regulated under the LDVR, it is this pollutant to which PSD * * * appli[es]." 75 FR 31528.

Although we propose to require that the State define GHGs as described immediately above, we solicit comment on whether the State may adopt a different definition that is at least as stringent, and, if so, what such a definition might be. We caution that a definition that includes more gases than the six identified above could prove to be less stringent in certain ways because it could allow greater opportunities for a source of different gases to net out of PSD.

We note that in this rulemaking, we are not addressing the issue of accounting for emissions of GHGs from bioenergy and other biogenic sources (which are generated during the combustion or decomposition of biologically based material such as forest or agriculture products). When we finalized the Tailoring Rule, we noted that EPA planned to seek comment on how to address emissions of biogenic $CO_2$ under the PSD and title V programs through future action, such as a separate Advance Notice of Proposed Rulemaking (ANPR) (75 FR at 31591). As a first step, we recently issued a Call for Information (CFI) to solicit public comment and data on technical issues that might be used to consider biomass fuels and the emissions resulting from their combustion differently with regard to applicability under PSD and with regard to the BACT review process under PSD. See "Call for Information: Information on Greenhouse Gas Emissions Associated with Bioenergy and Other Biogenic Sources," 75 FR 41173 (July 15, 2010).

Additional information on this CFI is available at *http://www.epa.gov/climatechange/emissions/biogenic_emissions.html.* In the CFI we stated: "In response to this Call for Information, interested parties are invited to assist EPA in the following: (1) Surveying and assessing the science by submitting research studies or other relevant information, and (2) evaluating different accounting approaches and options by providing policy analyses, proposed or published methodologies, or other relevant information. Interested parties are also invited to submit data or

other relevant information about the current and projected scope of GHG emissions from bioenergy and other biogenic sources." 75 FR at 41174.

Without prejudging the outcome of the CFI process, EPA anticipates that the comments we receive in response to the CFI, with regard to applicability under PSD and with regard to the BACT review process under PSD, will inform any subsequent actions to address applicability of emissions of GHGs from bioenergy and other biogenic sources under the PSD program.

*(iii) Thresholds*

For a State to correct its SIP, the State must submit a SIP revision that applies PSD to GHG sources. Once a State applies the PSD program to GHG-emitting sources, the State must determine the threshold for emissions from those sources that will trigger PSD. In the Tailoring Rule, EPA promulgated a determination that the CAA thresholds of 100 or 250 tpy (depending on the source category) would not apply as of January 2, 2011, or for a period of years thereafter, in light of, in part, administrative concerns. Instead, EPA promulgated a phase-in approach that limits PSD applicability to only the largest GHG emitting sources for a period of time.

A State, in revising its SIP to apply PSD to GHG sources, may adopt the Tailoring Rule phase-in approach into its SIP or it may adopt lower thresholds, but if it adopts lower thresholds, it must show that it has "adequate personnel [and] funding * * * to carry out," that is, administer and implement, the PSD program with those lower thresholds, in accordance with CAA section 110(a)(2)(E)(i).[13]

In the Tailoring Rule, EPA adopted a $CO_2e$ metric and use of short tons (as opposed to metric tons) for calculating GHG emissions in order to implement the higher thresholds. 75 FR 31530, 31532. As noted above, a State retains the authority to adopt lower thresholds than in the Tailoring Rule in order to meet statutory requirements. As a result, the states are not obligated to adopt the $CO_2e$ metric or use of short tons; however, the State must assure that its approach is at least as stringent as the thresholds in the Tailoring Rule.

*(iv) State Adoption of "Regulated NSR Pollutants"*

Beyond this, we encourage—but do not propose to require—the states for which we propose a SIP Call to submit a SIP revision to adopt the PSD applicability provision found in EPA regulations—which is that PSD applies to "regulated NSR pollutant[s]," including any air pollutant "subject to regulation"—instead of simply adding GHGs to the SIP's list of pollutants subject to PSD.

There are many advantages for a State to revise its SIP PSD applicability provisions in the manner that we encourage. First, doing so would more readily incorporate, for State law purposes, the phase-in approach for PSD applicability to GHG sources that EPA has developed in the Tailoring Rule and expects to develop further through additional rulemaking. As explained in the Tailoring Rule, incorporating this phase-in approach for State law purposes—including Steps 1 and 2 of the phase-in as promulgated in the Tailoring Rule and additional steps of the phase-in that EPA may promulgate in the future—can be most readily accomplished through State interpretation of the "subject to regulation" prong of the definition of "regulated NSR pollutant." If, instead of adopting into its SIP the "regulated NSR pollutant" trigger for PSD applicability, the State simply adds GHGs to its list of pollutants subject to PSD, then the SIP will not include the term "subject to regulation" and therefore may not include any vehicle or "hook" for the State to adopt by interpretation the current and any future steps of the phase-in approach. As a result, the State may have to adopt and submit for EPA approval additional SIP revisions to incorporate the current and future steps of the phase-in approach.

There are other advantages to a State that adopts EPA's definition of "regulated NSR pollutant." The SIP would apply PSD to sources emitting $PM_{2.5}$, thereby resolving as well the problem that some SIPs have of failing to cover $PM_{2.5}$ for PSD purposes. That is, many of the states for which we propose a SIP Call due to their SIPs' failure to apply PSD to sources that emit GHGs also may fail to apply PSD to sources that emit $PM_{2.5}$.[14] To this point in time, this failure has not been a problem because we have allowed the State to issue PSD permits for sources of $PM_{2.5}$ emissions through what is commonly called EPA's "1997 $PM_{10}$ surrogate policy." Under the 1997 $PM_{10}$ surrogate policy, sources and permitting authorities satisfy the CAA requirements for $PM_{2.5}$ in PSD permits by applying the $PM_{10}$ requirements as a surrogate for $PM_{2.5}$. Each permit that relies on our $PM_{10}$ surrogate policy is subject to review as to the adequacy of the presumption that the $PM_{2.5}$ requirements are satisfied. However, we note that EPA has issued a notice of proposed rulemaking to end the prospective use of the 1997 $PM_{10}$ surrogate policy by the end of 2010 (75 FR 6827, February 11, 2010). We are not at this time taking action with respect to these SIPs on account of $PM_{2.5}$, but we encourage states to submit SIP revisions that apply PSD to sources of $PM_{2.5}$.

In addition, the SIP would, in effect, automatically update the State PSD program to apply PSD to any newly regulated pollutants and thereby avoid recurrence of the present problem of a gap in the PSD program coverage for newly regulated pollutants. Finally, State adoption of EPA's definition of "regulated NSR pollutant" would allow the SIP to mirror EPA regulations and the SIPs of most states, which may promote consistency and ease administration.

Notwithstanding the advantages to a State of revising its SIP to apply PSD to "regulated NSR pollutants," we do not, at this time, propose a finding that the SIP is substantially inadequate to comply with a CAA requirement or propose to issue a SIP call that would require a SIP revision that applies PSD to "regulated NSR pollutants." Instead, as noted above, our proposed finding and SIP call are limited to the failure to apply PSD to GHG-emitting sources, and the SIP revision may simply include GHGs on the State's list of pollutants subject to PSD. We do not propose to require the "regulated NSR pollutant" approach because that approach is not necessary to correct the substantial inadequacy—which is the failure of the PSD SIP to cover GHG sources—for which we propose to issue a SIP Call. Rather, that substantial inadequacy may be corrected more narrowly by listing GHGs.

3. General Authority Provision

As noted earlier in this preamble, some SIPs that apply PSD to sources of specified pollutants, not including GHGs, may also include a general authority provision that provides general authority to issue PSD permits that meet EPA requirements. For states that include such general authority, it

[13] We indicated in the Tailoring Rule (75 FR at 31525–26) that a State may undertake a SIP action to either: (1) Revise its PSD program, which already applies to GHG-emitting sources, in order to implement the tailoring approach; or (2) revise its PSD program so that it applies to GHG-emitting sources, in which case the State must also establish its PSD applicability thresholds for PSD. This rulemaking relates to the latter described SIP action.

[14] Following a 1997 review of our national ambient air quality standards ("NAAQS") for particulate matter, we promulgated NAAQS for fine particles ($PM_{2.5}$). We then designated all areas of the country as "attainment," "nonattainment," or unclassifiable for the $PM_{2.5}$ standards, which became effective in April 2005. Pursuant to the CAA, States are obliged to revise their PSD regulations to include the new $PM_{2.5}$ standards.

may be possible to read their SIPs as a whole to authorize the issuance of PSD permits to GHG sources. In that case, EPA would not finalize a finding of substantial inadequacy or a SIP Call for that State.

Even so, EPA encourages states with these SIP provisions to submit a SIP revision that applies PSD to GHG-emitting sources. Such a SIP revision would add clarity to the SIP and, in general, carry the benefits described earlier in this preamble.

*G. EPA Actions on SIP Submittals; Findings of Failure To Submit and Promulgation of FIPs*

1. Actions on SIP Submittals

As noted above, for any State for which EPA proposes a finding of substantial inadequacy and SIP Call but that submits a SIP revision before December 1, 2010, EPA will not issue a final finding of substantial inadequacy or a SIP Call. Instead, EPA will take action on the SIP submittal as quickly as possible.

By the same token, for any State for which EPA has issued a final finding of substantial inadequacy and a SIP Call, if the State submits the SIP revision within the submittal deadline, then EPA will not issue a finding of failure to submit or promulgate a FIP. Instead, EPA will take action on the SIP submittal as quickly as possible.

We reiterate and encourage states to keep in mind that PSD applicability for certain GHG sources begins January 2, 2011. As such, even states with proposed SIP revisions will not be able to issue federally approved PSD permits for construction or modification to affected sources until those revisions are approved. The affected source would be able to receive a State-issued permit, but the lack of a federally approved permit means that the source would not be in accordance with Federal requirements if it constructed or modified. In light of this potential for burden on the affected sources, we intend to act on any SIP submittals that we receive as promptly as possible.

For example, upon request of the State, we will parallel-process the SIP submittal. Under this approach, the State sends us the draft of the SIP revision on which it plans to seek public comment at the State level, in accordance with CAA section 110(a)(2), and we will publish a proposed approval of that draft SIP revision. In addition, at the same time the State solicits such public comment of its SIP revision at the State level, we will initiate a separate public proceeding on our proposed approval of the SIP revision at the Federal level. If, subsequently, the SIP revision that the State adopts and submits to EPA is substantially similar to the draft on which EPA solicited comment, then EPA will proceed to take final action on the SIP submittal and will not re-notice it for public comment. EPA has successfully employed the parallel-processing approach in past rulemakings, and we believe that to employ it in this process could significantly shorten the time EPA needs to act on the SIP revision.

2. Findings of Failure To Submit and Promulgation of FIPs

If the State does not meet its SIP submittal deadline, we will immediately issue a finding of failure to submit a required SIP submission under CAA section 110(c)(1)(A) and immediately thereafter issue a FIP. This timing for FIP promulgation is authorized under CAA section 110(c)(1), which authorizes us to promulgate a FIP "at any time within 2 years after" finding a failure to submit a required SIP submission. We discuss our approach to the FIP in the companion notice to this rulemaking concerning FIPs for failure to submit the required PSD SIP revision.

3. Rescission of the FIP

After we have promulgated a FIP, it must remain in place until the State submits a SIP revision and we approve that SIP revision. CAA section 110(c)(1). Under the present circumstances, we will act on a SIP revision to apply the PSD program to GHG sources as quickly as possible and, upon request of the State, will parallel-process the SIP submittal in the manner described earlier in this preamble. If we approve such a SIP revision, we will, at the same time, rescind the FIP. We discuss this approach in the companion notice to this rulemaking concerning FIPs for failure to submit the required PSD SIP revision.

*H. Streamlining the State Process for SIP Development and Submittal*

As stated earlier in this preamble, we recognize that the deadline we are giving states to submit their SIP revisions is expeditious. EPA understands that each State must determine whether its own regulatory development process allows for streamlining, and we defer to the states on the extent to which they may choose to streamline the process. Given the exigencies, we believe a streamlining approach could be beneficial to a State in meeting its deadline. We are prepared to work with the states to develop methods to streamline the State administrative process, although we recognize that the states remain fully in charge of their own State processes. We solicit recommendations during the comment period for ways to streamline the State process for adopting and submitting these SIPs, and to streamline or simplify what is required for the SIP submittal.

For example, we may streamline the process as it concerns public hearing requirements. Many states require that the underlying State regulation that the State intends to develop into the SIP submittal undergo a public hearing. In addition, the CAA requires that the State provide a public hearing on the proposed SIP submittal, under CAA section 110(a)(2). EPA solicits public comment on whether it may, consistent with the CAA, accept the public hearing that the State holds on the underlying regulation as meeting the requirement for the hearing on the SIP submittal, as long as the State provides adequate public notice of the hearing, and EPA will not require a separate SIP hearing.

*I. Primacy of the SIP Process*

This proposal is secondary to our overarching goal, which is to assure that in every instance, it will be the State that will be that permitting authority. EPA continues to recognize that the states are best suited to the task of permitting because they and their sources have experience working together in the State PSD program to process permit applications. EPA seeks to remain solely in its primary role of providing guidance and acting as a resource for the states as they make the various required permitting decisions for GHG emissions.

Accordingly, beginning immediately we intend to work closely with the states—as we have already begun to do since earlier in the year—to help them promptly develop and submit to us their corrective SIP revisions that extend their PSD program to GHG-emitting sources. Moreover, we intend to promptly act on their SIP submittals. Again, EPA's goal is to have each and every affected State have in place the necessary permitting authorities by the time businesses seeking construction permits need to have their applications processed and the permits issued—and to achieve that outcome by means of engaging with the states directly through a concerted process of consultation and support.

EPA is taking up the additional task of proposing this SIP Call and the companion FIP action only because the Agency believes it is compelled to do so by the need to assure businesses, to the maximum extent possible and as

promptly as possible, that a permitting authority is available to process PSD permit applications for GHG-emitting sources once they become subject to PSD requirements on January 2, 2011.

In order to provide that assurance, we are obligated to recognize, as both states and the regulated community already do, that there may be circumstances in which states are simply unable to develop and submit those SIP revisions by January 2, 2011, or for some period of time beyond that date. As a result, absent further action by EPA, those States' affected sources confront the risk that they may have to put on hold their plans to construct or modify, a risk that may have adverse consequences for the economy.

Given these exigent circumstances, EPA proposes this plan, within the limits of our power, with the intent to make a back-up permitting authority available—and to send a signal of assurance expeditiously in order to reduce uncertainty and thus facilitate businesses' planning. Within the design of the CAA, it is EPA that must fill that role of back-up permitting authority. This SIP Call action and the companion FIP action fulfill the CAA requirements to establish EPA in that role.

At the same time, we propose these actions with the intent that states retain as much discretion as possible in the hand of the states. In this rulemaking, EPA proposes states may choose the deadline they consider reasonable for submission of their corrective SIP revision. If, under CAA requirements, we are compelled to promulgate a FIP, we invite the affected State to accept a delegation of authority to implement that FIP, so that it will still be the State that processes the permit applications, albeit operating under Federal law. In addition, if we are compelled to issue a FIP, we intend to continue to work closely with the State to assist it in developing and submitting for approval its corrective SIP revision, so as to minimize the amount of time that the FIP must remain in place.

Finally, we can report that in informal conversations, officials of various states have acknowledged the need for our SIP call and FIP actions. That is, they have acknowledged that a short-term FIP may be necessary in their states to establish permitting authority to construct and modify in accordance with environmental safeguards for these sources. In addition, some states have indicated that they will closely consider their opportunities to accept delegation of the permitting responsibilities.

*J. Sanctions*

Under CAA section 179(a)(3)(A), if EPA finds that a State failed to submit a PSD SIP revision as required under a SIP Call, then a mandatory sanctions clock begins to run, so that if the State does not submit the required SIP revision within 18 months, EPA must impose one of two sanctions identified under CAA section 179; if the State does not submit the required SIP revision within another 6 months, EPA must impose the second of the sanctions. However, because each sanction applies only to nonattainment areas, it has been a longstanding EPA position that a finding that a State has failed to submit a required SIP revision for a PSD area will not trigger mandatory sanctions.

The two sanctions are described in CAA section 179(b) and include: (i) "Highway sanctions," which are "a prohibition, applicable to a nonattainment area, on the approval" of certain highway construction projects or certain Federal grants for highway construction, CAA section 179(b)(1); and (ii) "[i]n applying the emission offset requirements of [CAA section 173] to new or modified sources or emissions units for which a permit is required under this part, the ratio of emissions reductions to increased emissions shall be at least 2 to 1." CAA section 179(b)(2).

Each of these sanctions applies, by its terms, to nonattainment areas. That is, as just quoted, CAA section 179(b)(1) limits the application of the highway sanctions "to a nonattainment area," and the offsets sanctions under CAA section 173(c) apply only to nonattainment areas. *See, e.g.,* CAA section 173(c)(1) (referring to "any offset requirement under this part [D]," which is entitled, "Plan Requirements for Nonattainment Areas"); section 182(b)(5) (offset requirement for ozone moderate areas); section 182(c)(10) (offset requirement for ozone serious areas); section 182(d)(2) (offset requirement for ozone severe areas); section 182(e)(1) (offset requirement for ozone extreme areas). Neither of the mandatory sanctions provided under CAA section 179(b) applies to attainment/unclassifiable areas.

As a result, a finding that a State has failed to submit a required SIP revision will not trigger mandatory sanctions.

*K. Title V*

We note that a number of states may have a similar problem with their approved title V operating permit programs, (*i.e.,* that their title V programs do not apply to GHG-emitting sources). We intend to address this issue through separate rulemaking.

## V. Statutory and Executive Order Reviews

*A. Executive Order 12866—Regulatory Planning and Review*

Under Executive Order (EO) 12866 (58 FR 51735, October 4, 1993), this action is a "significant regulatory action" because it raises novel legal or policy issues. Accordingly, EPA submitted this action to the Office of Management and Budget (OMB) for review under EO 12866 and any changes made in response to OMB recommendations have been documented in the docket for this action.

*B. Paperwork Reduction Act*

This action imposes new information collection burden. Although this action asks states to provide information during the comment period, the information requested, which concerns whether the states have authority to regulate GHGs under their SIP PSD provisions, is substantially similar to the information already requested of the states in the Tailoring Rule. The OMB has previously approved the information collection requirements contained in the existing regulations for PSD (*see, e.g.,* 40 CFR 52.21) and title V (*see* 40 CFR parts 70 and 71) under the provisions of the *Paperwork Reduction Act,* 44 U.S.C. 3501 *et seq.* and has assigned OMB control number 2060–0003 and OMB control number 2060–0336 respectively. The OMB control numbers for EPA's regulations in 40 CFR are listed in 40 CFR part 9.

The tailoring rule does not establish any new requirements (either control or reporting) for any sources. It merely establishes the thresholds that trigger NSR and title V for GHG sources. The trigger for GHG and title V is not due to the tailoring rule but the result of the endangerment finding and the LDVR. The NSR and title V ICRs will need to be modified to include the new sources that will be triggered due to the GHG requirements (in July 2011). The Agency anticipates making such modifications upon renewal of the NSR and title V ICRs at the end of the year.

*C. Regulatory Flexibility Act*

The Regulatory Flexibility Act (RFA) generally requires an agency to prepare a regulatory flexibility analysis of any rule subject to notice and comment rulemaking requirements under the Administrative Procedure Act or any other statute unless the agency certifies that the rule will not have a significant economic impact on a substantial

number of small entities. Small entities include small businesses, small organizations, and small governmental jurisdictions.

For purposes of assessing the impacts of this notice on small entities, small entity is defined as: (1) A small business that is a small industrial entity as defined in the U.S. Small Business Administration (SBA) size standards (*see* 13 CFR 121.201); (2) a small governmental jurisdiction that is a government of a city, county, town, school district, or special district with a population of less than 50,000; or (3) a small organization that is any not-for-profit enterprise that is independently owned and operated and is not dominant in its field.

This proposed rule will affect states and will not, in and of itself, directly affect sources. In addition, although this rule could lead to Federal permitting requirements for certain sources, those sources are large emitters of GHGs and tend to be large sources. After considering the economic impacts of this proposed rule on small entities, I certify that this action will not have a significant economic impact on a substantial number of small entities.

We continue to be interested in the potential impacts of the proposed rule on small entities and welcome comments on issues related to such impacts.

*D. Unfunded Mandates Reform Act*

This rule does not contain a Federal mandate that may result in expenditures of $100 million or more for State, local, and tribal governments, in the aggregate, or the private sector in any one year. The action may impose a duty on certain State, local or tribal governments to meet their existing obligation for PSD SIP submittal, but with lesser expenditures. Thus, this rule is not subject to the requirements of sections 202 or 205 of UMRA.

This rule is also not subject to the requirements of section 203 of UMRA because it contains no regulatory requirements that might significantly or uniquely affect small governments.

*E. Executive Order 13132—Federalism*

This action does not have federalism implications. It will not have substantial direct effects on the states, on the relationship between the national government and the states, or on the distribution of power and responsibilities among the various levels of government, as specified in Executive Order 13132. This action merely prescribes EPA's action for states that do not meet their existing obligation for PSD SIP submittal. Thus, Executive Order 13132 does not apply to this action.

In the spirit of Executive Order 13132, and consistent with EPA policy to promote communications between EPA and State and local governments, EPA specifically solicits comment on this proposed rule from State and local officials.

*F. Executive Order 13175—Consultation and Coordination With Indian Tribal Governments*

This action does not have tribal implications, as specified in Executive Order 13175 (65 FR 67249, November 9, 2000). In this action, EPA is not addressing any tribal implementation plans. This action is limited to states that do not meet their existing obligation for PSD SIP submittal. Thus, Executive Order 13175 does not apply to this action.

Although Executive Order 13175 does not apply to this proposed rule, EPA specifically solicits additional comment on this proposed action from tribal officials.

*G. Executive Order 13045—Protection of Children From Environmental Health Risks and Safety Risks*

EPA interprets EO 13045 (62 FR 19885, April 23, 1997) as applying only to those regulatory actions that concern health or safety risks, such that the analysis required under section 5–501 of the EO has the potential to influence the regulation. This action is not subject to EO 13045 because it merely prescribes EPA's action for states that do not meet their existing obligation for PSD SIP submittal.

*H. Executive Order 13211—Actions Concerning Regulations That Significantly Affect Energy Supply, Distribution, or Use*

This action is not a "significant energy action" as defined in Executive Order 13211 (66 FR 28355 (May 22, 2001)), because it is not likely to have a significant adverse effect on the supply, distribution, or use of energy. This action merely prescribes EPA's action for states that do not meet their existing obligation for PSD SIP submittal.

*I. National Technology Transfer and Advancement Act*

Section 12(d) of the National Technology Transfer and Advancement Act of 1995 ("NTTAA"), Public Law No. 104–113, 12(d) (15 U.S.C. 272 note) directs EPA to use voluntary consensus standards in its regulatory activities unless to do so would be inconsistent with applicable law or otherwise impractical. Voluntary consensus standards are technical standards (*e.g.,* materials specifications, test methods, sampling procedures, and business practices) that are developed or adopted by voluntary consensus standards bodies. NTTAA directs EPA to provide Congress, through OMB, explanations when the Agency decides not to use available and applicable voluntary consensus standards.

This proposed rulemaking does not involve technical standards. Therefore, EPA is not considering the use of any voluntary consensus standards.

*J. Executive Order 12898—Federal Actions To Address Environmental Justice in Minority Populations and Low-Income Populations*

Executive Order 12898 (59 FR 7629, February 16, 1994) establishes Federal executive policy on environmental justice. Its main provision directs Federal agencies, to the greatest extent practicable and permitted by law, to make environmental justice part of their mission by identifying and addressing, as appropriate, disproportionately high and adverse human health or environmental effects of their programs, policies, and activities on minority populations and low-income populations in the U.S.

EPA has determined that this proposed rule will not have disproportionately high and adverse human health or environmental effects on minority or low-income populations because it does not affect the level of protection provided to human health or the environment. This proposed rule merely prescribes EPA's action for states that do not meet their existing obligation for PSD SIP submittal.

## VI. Statutory Authority

The statutory authority for this action is provided by sections 101, 111, 114, 116, and 301 of the CAA as amended (42 U.S.C. 7401, 7411, 7414, 7416, and 7601).

## List of Subjects in 40 CFR Part 52

Environmental protection, Air pollution control, Carbon dioxide, Carbon dioxide equivalents, Carbon monoxide, Greenhouse gases, Hydrofluorocarbons, Intergovernmental relations, Lead, Methane, Nitrogen dioxide, Nitrous oxide, Ozone, Particulate matter, Perfluorocarbons, Reporting and recordkeeping requirements, Sulfur hexafluoride, Sulfur oxides, Volatile organic compounds.

Dated: August 12, 2010.

**Lisa P. Jackson,**

*Administrator.*

[FR Doc. 2010–21701 Filed 9–1–10; 8:45 am]

**BILLING CODE 6560–50–P**

## ENVIRONMENTAL PROTECTION AGENCY

## 40 CFR Part 52

**[EPA–R09–OAR–2010–0521; FRL–9196–2]**

## Revisions to the Arizona State Implementation Plan, Maricopa County

**AGENCY:** Environmental Protection Agency (EPA).

**ACTION:** Proposed rule.

**SUMMARY:** EPA is proposing to approve revisions to the Maricopa County portion of the Arizona State Implementation Plan (SIP). These revisions concern particulate matter (PM) emissions from fugitive dust sources such as construction sites and related activities, unpaved roads, unpaved parking lots, and disturbed soils on vacant lots. We are approving local rules that regulate these emission sources under the Clean Air Act as amended in 1990 (CAA or the Act). We are taking comments on this proposal and plan to follow with a final action.

**DATES:** Any comments must arrive by October 4, 2010.

**ADDRESSES:** Submit comments, identified by docket number EPA–R09–OAR–2010–0521, by one of the following methods:

1. *Federal eRulemaking Portal: http://www.regulations.gov*. Follow the on-line instructions.
2. *E-mail: steckel.andrew@epa.gov.*
3. *Mail or deliver:* Andrew Steckel (Air-4), U.S. Environmental Protection Agency Region IX, 75 Hawthorne Street, San Francisco, CA 94105–3901.

*Instructions:* All comments will be included in the public docket without change and may be made available online at *http://www.regulations.gov*, including any personal information provided, unless the comment includes Confidential Business Information (CBI) or other information whose disclosure is restricted by statute. Information that you consider CBI or otherwise protected should be clearly identified as such and should not be submitted through *http://www.regulations.gov* or e-mail. *http://www.regulations.gov* is an "anonymous access" system, and EPA will not know your identity or contact information unless you provide it in the body of your comment. If you send e-mail directly to EPA, your e-mail address will be automatically captured and included as part of the public comment. If EPA cannot read your comment due to technical difficulties and cannot contact you for clarification, EPA may not be able to consider your comment.

*Docket:* The index to the docket for this action is available electronically at *http://www.regulations.gov* and in hard copy at EPA Region IX, 75 Hawthorne Street, San Francisco, California. While all documents in the docket are listed in the index, some information may be publicly available only at the hard copy location (*e.g.,* copyrighted material), and some may not be publicly available in either location (*e.g.,* CBI). To inspect the hard copy materials, please schedule an appointment during normal business hours with the contact listed in the **FOR FURTHER INFORMATION CONTACT** section.

**FOR FURTHER INFORMATION CONTACT:** Andrew Steckel, EPA Region IX, (415) 947–4115, *steckel.andrew@epa.gov.*

**SUPPLEMENTARY INFORMATION:** Throughout this document, "we," "us" and "our" refer to EPA.

### Table of Contents

I. The State's Submittal
A. What rules did the State submit?
B. Are there other versions of these rules?
C. What is the purpose of the submitted rule revisions?
II. EPA's Evaluation and Action
A. How is EPA evaluating the rules?
B. Do the rules meet the evaluation criteria?
C. EPA Recommendations To Further Improve the Rules
D. Public Comment and Final Action
III. Statutory and Executive Order Reviews

### I. The State's Submittal

*A. What rules did the State submit?*

Table 1 lists the rules addressed by this proposal with the dates that they were adopted by the local air agency, the Maricopa County Air Quality Department (MCAQD) and submitted by the Arizona Department of Air Quality (ADEQ).

TABLE 1—SUBMITTED RULES

| Local agency | Rule No. | Rule title | Adopted | Submitted |
|---|---|---|---|---|
| MCAQD | 310 | Fugitive Dust From Dust-Generating Operations | 01/27/10 | 04/12/10 |
| MCAQD | 310.01 | Fugitive Dust From Non-Traditional Sources of Fugitive Dust. | 01/27/10 | 04/12/10 |
| MCAQD | | Appendix C—Fugitive Dust Test Methods | 03/27/08 | 07/10/08 |

On June 8, 2010, EPA determined that the Rule 310 and 310.01 submittals from Maricopa County met the completeness criteria in 40 CFR part 51 appendix V; these criteria must be met before formal EPA review begins.

*B. Are there other versions of these rules?*

There are prior versions of Rule 310, Rule 310.01 and Appendix C in the SIP. On August 21, 2007, EPA approved and incorporated within the SIP the April 7, 2004 adopted versions of Rule 310, Rule 310.01, and Appendix C (see 72 FR 46564). Maricopa County submitted, through the ADEQ, the March 26, 2008 adopted versions of Rule 310, Rule 310.01, and Appendix C to EPA on July 10, 2008. We have not acted on these versions of the rules. The January 27, 2010 version of Rules 310 and 310.01, the subject of this proposal, however, incorporates the 2008 revisions as well as these latest 2010 amendments. Consequently, for this proposal, we reviewed all amendments and the rules as a whole. In the case of Appendix C, we reviewed the submitted March 27, 2008 version since there was no subsequent submittal.

*C. What is the purpose of the submitted rule revisions?*

PM contributes to effects that are harmful to human health and the environment, including premature mortality, aggravation of respiratory and cardiovascular disease, decreased lung function, visibility impairment, and damage to vegetation and ecosystems. Section 110(a) of the CAA requires States to submit regulations that control PM emissions. Rule 310 is designed to limit the emissions of fugitive dust or particulate matter from activity related to land-clearing, earthmoving, construction, demolition, bulk material hauling, temporary staging areas and

unpaved parking lots, haul and access roads, vehicle track-out, and disturbed soil associated with these activities. Rule 310.01 is a rule designed to limit the emissions of fugitive dust or particulate matter from disturbed surfaces and vehicle use in open areas and vacant lots, unpaved roadways and parking lots, livestock activities, erosion-caused deposition of bulk material on paved roadways, and easements, rights-of-way, and access roads for utilities.

## II. EPA's Evaluation and Action

*A. How is EPA evaluating the rules?*

SIP rules must be enforceable (*see* section 110(a) of the Act) and must not relax existing requirements (*see* sections 110(l) and 193). In addition, SIP rules must implement Reasonably Available Control Measures (RACM), including Reasonably Available Control Technology (RACT), in moderate PM nonattainment areas, and Best Available Control Measures (BACM), including Best Available Control Technology (BACT), in serious PM nonattainment areas (*see* CAA sections 189(a)(1) and 189(b)(1)). The MCAQD regulates a PM nonattainment area classified as serious (*see* 40 CFR part 81), so Rule 310 and Rule 310.01 must implement BACM.

Guidance and policy documents that we use to evaluate enforceability and RACM or BACM requirements consistently include the following:

1. "Issues Relating to VOC Regulation Cutpoints, Deficiencies, and Deviations; Clarification to Appendix D of November 24, 1987 **Federal Register** Notice," (Blue Book), notice of availability published in the May 25, 1988 **Federal Register**.
2. "Guidance Document for Correcting Common VOC & Other Rule Deficiencies," EPA Region 9, August 21, 2001 (the Little Bluebook).
3. "State Implementation Plans; General Preamble for the Implementation of Title I of the Clean Air Act Amendments of 1990," 57 FR 13498 (April 16, 1992); 57 FR 18070 (April 28, 1992).
4. "State Implementation Plans for Serious PM–10 Nonattainment Areas, and Attainment Date Waivers for PM–10 Nonattainment Areas Generally; Addendum to the General Preamble for the Implementation of Title I of the Clean Air Act Amendments of 1990," 59 FR 41998 (August 16, 1994).
5. "PM–10 Guideline Document," EPA 452/R–93–008, April 1993.
6. "Fugitive Dust Background Document and Technical Information Document for Best Available Control Measures," EPA 450/2–92–004, September 1992.

*B. Do the rules meet the evaluation criteria?*

We believe these rules are consistent with the relevant policy and guidance. Our Technical Support Documents (TSD) on each rule has our detailed review and evaluation.

*C. EPA Recommendations To Further Improve the Rules*

We have no recommendation at this time.

*D. Public Comment and Final Action*

Because EPA believes the submitted rules fulfill all relevant requirements, we are proposing to fully approve them as described in section 110(k)(3) of the Act. We will accept comments from the public on this proposal for the next 30 days. Unless we receive convincing new information during the comment period, we intend to publish a final approval action that will incorporate these rules into the federally enforceable SIP.

## III. Statutory and Executive Order Reviews

Under the Clean Air Act, the Administrator is required to approve a SIP submission that complies with the provisions of the Act and applicable Federal regulations. 42 U.S.C. 7410(k); 40 CFR 52.02(a). Thus, in reviewing SIP submissions, EPA's role is to approve State choices, provided that they meet the criteria of the Clean Air Act. Accordingly, this action merely approves State law as meeting Federal requirements and does not impose additional requirements beyond those imposed by State law. For that reason, this action:

- Is not a "significant regulatory action" subject to review by the Office of Management and Budget under Executive Order 12866 (58 FR 51735, October 4, 1993);
- Does not impose an information collection burden under the provisions of the Paperwork Reduction Act (44 U.S.C. 3501 *et seq.*);
- Is certified as not having a significant economic impact on a substantial number of small entities under the Regulatory Flexibility Act (5 U.S.C. 601 *et seq.*);
- Does not contain any unfunded mandate or significantly or uniquely affect small governments, as described in the Unfunded Mandates Reform Act of 1995 (Pub. L. 104–4);
- Does not have Federalism implications as specified in Executive Order 13132 (64 FR 43255, August 10, 1999);
- Is not an economically significant regulatory action based on health or safety risks subject to Executive Order 13045 (62 FR 19885, April 23, 1997);
- Is not a significant regulatory action subject to Executive Order 13211 (66 FR 28355, May 22, 2001);
- Is not subject to requirements of Section 12(d) of the National Technology Transfer and Advancement Act of 1995 (15 U.S.C. 272 note) because application of those requirements would be inconsistent with the Clean Air Act; and
- Does not provide EPA with the discretionary authority to address, as appropriate, disproportionate human health or environmental effects, using practicable and legally permissible methods, under Executive Order 12898 (59 FR 7629, February 16, 1994).

In addition, this rule does not have tribal implications as specified by Executive Order 13175 (65 FR 67249, November 9, 2000), because the SIP is not approved to apply in Indian country located in the State, and EPA notes that it will not impose substantial direct costs on tribal governments or preempt tribal law.

### List of Subjects in 40 CFR Part 52

Environmental protection, Air pollution control, Intergovernmental relations, Particulate matter, Reporting and recordkeeping requirements.

**Authority:** 42 U.S.C. 7401 *et seq.*

Dated: *August 23, 2010.*

**Jared Blumenfeld,**

*Regional Administrator, Region IX.*

[FR Doc. 2010–21959 Filed 9–1–10; 8:45 am]

BILLING CODE 6560–50–P

---

## ENVIRONMENTAL PROTECTION AGENCY

## 40 CFR Part 60

**[EPA–HQ–OAR–2010–0115; FRL–9195–9]**

**RIN 2060–AQ23**

## Method 16C for the Determination of Total Reduced Sulfur Emissions From Stationary Sources

**AGENCY:** Environmental Protection Agency (EPA).

**ACTION:** Proposed rule.

**SUMMARY:** This action proposes a method for measuring total reduced sulfur (TRS) emissions from stationary sources. The EPA is making this method available for general use as requested by a number of source testing companies since it has been allowed for use in the past on a case-by-case basis for kraft pulp mills and refineries. This proposed method would offer advantages over

current methods in that real-time data are acquired and testers are allowed to use analyzers and procedures for measuring TRS that are commonly used to measure sulfur dioxide ($SO_2$). The proposed method would offer an alternative to methods that are currently required.

**DATES:** Comments must be received on or before November 1, 2010.

**ADDRESSES:** Submit your comments, identified by Docket ID No. EPA–HQ–OAR–2010–0115, by one of the following methods:

- *http://www.regulations.gov:* Follow the on-line instructions for submitting comments.
- *E-mail: a-and-r-docket@epa.gov,* attention Docket ID No. EPA–HQ–OAR–2010–0115.
- *Fax:* (202) 566–9744, attention Docket ID No. EPA–HQ–OAR–2010–0115.
- *Mail:* Method 16C for the Determination of Total Reduced Sulfur Emissions from Stationary Sources, Docket ID No. EPA–HQ–OAR–2010–0115. Environmental Protection Agency, Mailcode: 2822T, 1200 Pennsylvania Ave., NW., Washington, DC 20460. Please include a total of two copies.
- *Hand Delivery:* Deliver your comments to EPA Docket Center, Public Reading Room, EPA West, Room 3334, 1301 Constitution Ave., NW., Washington, DC 20460, attention Docket ID No. EPA–HQ–OAR–2010–0115. Such deliveries are only accepted during the Docket's normal hours of operation, and special arrangements should be made for deliveries of boxed information.

*Instructions:* Direct your comments to Docket ID No. EPA–HQ–OAR–2010–0115. EPA's policy is that all comments received will be included in the public docket without change and may be made available online at *http://www.regulations.gov,* including any personal information provided, unless the comment includes information claimed to be confidential business information (CBI) or other information whose disclosure is restricted by statute. Do not submit information that you consider to be CBI or otherwise protected through *http://www.regulations.gov* or e-mail. The *http://www.regulations.gov* Web site is an "anonymous access" system, which means EPA will not know your identity or contact information unless you provide it in the body of your comment. If you send an e-mail comment directly to EPA without going through *http://www.regulations.gov,* your e-mail address will be automatically captured and included as part of the comment that is placed in the public docket and made available on the Internet. If you submit an electronic comment, EPA recommends that you include your name and other contact information in the body of your comment and with any disk or CD–ROM you submit. If EPA cannot read your comment due to technical difficulties and cannot contact you for clarification, EPA may not be able to consider your comment. Electronic files should avoid the use of special characters, any form of encryption, and be free of any defects or viruses. For additional information about EPA's public docket, visit the EPA Docket Center homepage at *http://www.epa.gov/epahome/dockets.htm.*

*Docket:* All documents in the docket are listed in the *http://www.regulations.gov* index. Although listed in the index, some information is not publicly available, e.g., CBI or other information whose disclosure is restricted by statute. Certain other material, such as copyrighted material, will be publicly available only in hard copy. Publicly available docket materials are available either electronically in *http://www.regulations.gov* or in hard copy at the Method 16C for the Determination of Total Reduced Sulfur Emissions from Stationary Sources Docket, EPA/DC, EPA West, Room 3334, 1301 Constitution Ave., NW., Washington, DC. The Public Reading Room is open from 8:30 a.m. to 4:30 p.m., Monday through Friday, excluding legal holidays. The telephone number for the Public Reading Room is (202) 566–1744, and the telephone number for the Air Docket is (202) 566–1742.

**FOR FURTHER INFORMATION CONTACT:** Mr. Foston Curtis, U.S. Environmental Protection Agency, Office of Air Quality Planning and Standards, Air Quality Assessment Division (E143–02), Research Triangle Park, NC 27711; telephone number: (919) 541–1063; fax number: (919) 541–0516; and e-mail address: *curtis.foston@epa.gov.*

**SUPPLEMENTARY INFORMATION:**

## I. General Information

### *A. Does this action apply to me?*

Method 16C applies to the measurement of TRS at kraft pulp mills subject to Subpart BB of the New Source Performance Standards (NSPS). Currently, Methods 16, 16A, and 16B are allowed at these facilities. Method 16C would offer an additional alternative. The methods required under Subpart BB are sometimes used in special cases under the petroleum refineries NSPS (Subpart J). Method 16C may be applicable to other sources regulated by State and local regulations that specify the use of Methods 16, 16A, or 16B if desired. The entities that are potentially affected by this proposal are included in the following table.

| Category | NAICS [a] | Examples of regulated entities |
|---|---|---|
| Industry ..... | 324110 | Petroleum Refineries. |
| Industry ..... | 322110 | Kraft Pulp Mills. |

[a] North American Industry Classification System.

### *B. What should I consider as I prepare my comments for EPA?*

1. *Submitting CBI.* Do not submit this information to EPA through *http://www.regulations.gov* or e-mail. Clearly mark any of the information that you claim to be CBI. For CBI information in a disk or CD–ROM that you mail to EPA, mark the outside of the disk or CD–ROM as CBI and then identify electronically within the disk or CD–ROM the specific information that is claimed as CBI. In addition to one complete version of the comment that includes information claimed as CBI, a copy of the comment that does not contain the information claimed as CBI must be submitted for inclusion in the public docket. Information so marked will not be disclosed except in accordance with procedures set forth in 40 CFR part 2.

2. *Tips for Preparing Your Comments.* When submitting comments, remember to:

- Identify the rulemaking by docket number and other identifying information (subject heading, **Federal Register** date and page number).
- Follow directions—The agency may ask you to respond to specific questions or organize comments by referencing a Code of Federal Regulations (CFR) part or section number.
- Explain why you agree or disagree, suggest alternatives, and substitute language for your requested changes.
- Describe any assumptions and provide any technical information and/or data that you used.
- If you estimate potential costs or burdens, explain how you arrived at your estimate in sufficient detail to allow for it to be reproduced.
- Provide specific examples to illustrate your concerns, and suggest alternatives.
- Explain your views as clearly as possible, avoiding the use of profanity or personal threats.
- Make sure to submit your comments by the comment period deadline identified.

*C. Where can I get a copy of this document?*

In addition to being available in the docket, an electronic copy of this proposed rule is also available on the Worldwide Web (WWW) through the Technology Transfer Network (TTN). Following the Administrator's signature, a copy of this proposed rule will be posted on the TTN's policy and guidance page for newly proposed or promulgated rules at the following address: *http://www.epa.gov/ttn/oarpg/*. The TTN provides information and technology exchange in various areas of air pollution control.

*D. How is this document organized?*

The information in this preamble is organized as follows:

I. General Information
A. Does this action apply to me?
B. What should I consider as I prepare my comments for EPA?
C. Where can I get a copy of this document?
D. How is this document organized?
II. Background and Summary of Method 16C
III. Statutory and Executive Order Reviews
A. Executive Order 12866: Regulatory Planning and Review
B. Paperwork Reduction Act
C. Regulatory Flexibility Act
D. Unfunded Mandates Reform Act
E. Executive Order 13132: Federalism
F. Executive Order 13175: Consultation and Coordination With Indian Tribal Governments
G. Executive Order 13045: Protection of Children From Environmental Health Risks and Safety Risks
H. Executive Order 13211: Actions Concerning Regulations That Significantly Affect Energy Supply, Distribution, or Use
I. National Technology Transfer Advancement Act
J. Executive Order 12898: Federal Actions To Address Environmental Justice in Minority Populations and Low-Income Populations

## II. Background and Summary of Method 16C

The EPA is making Method 16C available for general use as requested by a number of source testing companies since it has been allowed on a case-by-case basis in the past. The proposed method would offer an alternative to methods that are currently required.

Method 16C uses the sampling procedures of Method 16A and the analytical procedures of Method 6C to measure TRS. Total reduced sulfur is defined as hydrogen sulfide, methyl mercaptan, dimethyl sulfide, and dimethyl disulfide. As described in Method 16A, the sample is collected from the source through a heated probe and immediately conditioned in a citrate buffer scrubber. The conditioned sample is oxidized in a tube furnace to convert TRS to sulfur dioxide ($SO_2$). The oxidized sample is then analyzed for $SO_2$ using a real-time $SO_2$ analyzer as prescribed in Method 6C. In this method, we are combining the proven combustion process of Method 16A with the analytical techniques currently used for $SO_2$ to form a new, improved method for measuring TRS.

This method would become available as an option for use in connection with the New Source Performance Standards for kraft pulp mills and possibly petroleum refineries. We have allowed its use in approximately four tests over the past 10 years on a case-by-case basis and, based on our experience, it is a good alternative. Method 16C offers advantages over currently required methods by supplying real-time data in the field using analyzers and procedures that are currently used for other pollutants. Performance checks are contained in the method to ensure that bias and calibration precision are periodically checked and maintained.

This rule will not require the use of Method 16C but will allow it as an alternative method at the discretion of the user. This method does not impact testing stringency; data are collected under the same conditions and time intervals as the current methods.

## III. Statutory and Executive Order Reviews

*A. Executive Order 12866: Regulatory Planning and Review*

This action is not a "significant regulatory action" under the terms of Executive Order (EO)12866 (58 FR 51735, October 4, 1993) and is therefore not subject to review under the EO.

*B. Paperwork Reduction Act*

This action does not impose an information collection burden under the provisions of the Paperwork Reduction Act, 44 U.S.C. 3501 et seq. Burden is defined at 5 CFR 1320.3(b). The method being proposed in this action does not add information collection requirements but makes an additional optional procedure available for use by affected parties.

*C. Regulatory Flexibility Act*

The Regulatory Flexibility Act (RFA) generally requires an agency to prepare a regulatory flexibility analysis of any rule subject to notice and comment rulemaking requirements under the Administrative Procedure Act or any other statute unless the agency certifies that the rule will not have a significant economic impact on a substantial number of small entities. Small entities include small businesses, small organizations, and small governmental jurisdictions.

For purposes of assessing the impacts of today's rule on small entities, small entity is defined as (1) A small business as defined by the Small Business Administration's (SBA) regulations at 13 CFR 121.201; (2) a small governmental jurisdiction that is a government of a city, county, town, school district or special district with a population of less than 50,000; and (3) a small organization that is any not-for-profit enterprise which is independently owned and operated and is not dominant in its field.

After considering the economic impacts of today's proposed rule on small entities, I certify that this action will not have a significant economic impact on a substantial number of small entities. This rulemaking does not impose emission measurement requirements beyond those specified in the current regulations, nor does it change any emission standard. As such, it will not present a significant economic impact on a substantial number of small businesses.

We continue to be interested in the potential impacts of the proposed rule on small entities and welcome comments on issues related to such impacts.

*D. Unfunded Mandates Reform Act*

This action contains no Federal mandates under the provisions of Title II of the Unfunded Mandates Reform Act of 1995 (UMRA), 2 U.S.C. 1531–1538 for State, local, or tribal governments or the private sector. The action imposes no enforceable duty on any State, local or tribal governments or the private sector. Therefore, this action is not subject to the requirements of sections 202 or 205 of the UMRA. This action is also not subject to the requirements of section 203 of UMRA because it contains no regulatory requirements that might significantly or uniquely affect small governments. This action makes available a new optional method for measuring pollutants but adds no new requirements.

*E. Executive Order 13132: Federalism*

This action does not have federalism implications. It will not have substantial direct effects on the States, on the relationship between the national government and the States, or on the distribution of power and responsibilities among the various levels of government, as specified in Executive Order 13132. This action simply makes an optional test method

available for affected sources who desire to use it. Thus, Executive Order 13132 does not apply to this action. In the spirit of Executive Order 13132, and consistent with EPA policy to promote communications between EPA and State and local governments, EPA specifically solicits comment on this proposed rule from State and local officials.

*F. Executive Order 13175: Consultation and Coordination With Indian Tribal Governments*

This action does not have tribal implications, as specified in Executive Order 13175 (65 FR 67249, November 9, 2000). This action makes available a new optional method for measuring pollutants but adds no new requirements. Thus, Executive Order 13175 does not apply to this action. EPA specifically solicits additional comment on this proposed action from tribal officials.

*G. Executive Order 13045: Protection of Children From Environmental Health Risks and Safety Risks*

EPA interprets EO 13045 (62 FR 19885, April 23, 1997) as applying only to those regulatory actions that concern health or safety risks, such that the analysis required under section 5–501 of the EO has the potential to influence the regulation. This action is not subject to EO 13045 because it does not establish an environmental standard intended to mitigate health or safety risks.

*H. Executive Order 13211: Actions Concerning Regulations That Significantly Affect Energy Supply, Distribution, or Use*

This action is not subject to Executive Order 13211 (66 FR 28355 (May 22, 2001)), because it is not a significant regulatory action under Executive Order 12866.

*I. National Technology Transfer and Advancement Act*

Section 12(d) of the National Technology Transfer and Advancement Act of 1995 ("NTTAA"), Public Law 104–113 (15 U.S.C. 272 note) directs EPA to use voluntary consensus standards in its regulatory activities unless to do so would be inconsistent with applicable law or otherwise impractical. Voluntary consensus standards are technical standards (*e.g.,* materials specifications, test methods, sampling procedures, and business practices) that are developed or adopted by voluntary consensus standards bodies. NTTAA directs EPA to provide Congress, through OMB, explanations when the Agency decides not to use available and applicable voluntary consensus standards. This proposed rulemaking does not involve technical standards.

*J. Executive Order 12898: Federal Actions To Address Environmental Justice in Minority Populations and Low-Income Populations*

Executive Order (EO) 12898 (59 FR 7629 (Feb. 16, 1994)) establishes Federal executive policy on environmental justice. Its main provision directs Federal agencies, to the greatest extent practicable and permitted by law, to make environmental justice part of their mission by identifying and addressing, as appropriate, disproportionately high and adverse human health or environmental effects of their programs, policies, and activities on minority populations and low-income populations in the United States.

EPA has determined that this proposed rule will not have disproportionately high and adverse human health or environmental effects on minority or low-income populations because it does not affect the level of protection provided to human health or the environment. This rule adds an optional test method and does not cause emission increases from regulated sources.

## Method 16C for the Determination of Total Reduced Sulfur Emissions From Stationary Sources

### List of Subjects in 40 CFR Part 60

Environmental protection, Air pollution control, Test methods and procedures, and Performance specifications.

Dated: August 26, 2010.

**Lisa P. Jackson,**

*Administrator.*

For the reasons stated in the preamble, the Environmental Protection Agency proposes to amend title 40, chapter I of the Code of Federal Regulations as follows:

## PART 60—STANDARDS OF PERFORMANCE FOR NEW STATIONARY SOURCES

1. The authority citation for part 60 continues to read as follows:

**Authority:** 42 U.S.C. 7401–7601.

2. Add Method 16C to Appendix A–6 to read as follows:

## APPENDIX A–6 TO PART 60—TEST METHODS 16 THROUGH 18

* * * * *

### METHOD 16C—DETERMINATION OF TOTAL REDUCED SULFUR EMISSIONS FROM STATIONARY SOURCES

*1.0 Scope and Application*

What is method 16C?

Method 16C is a procedure for measuring total reduced sulfur (TRS) in stationary source emissions using a continuous instrumental analyzer. Quality assurance and quality control requirements are included to assure that you, the tester, collect data of known quality. You must document your adherence to these specific requirements for equipment, supplies, sample collection and analysis, calculations, and data analysis. This method does not completely describe all equipment, supplies, and sampling and analytical procedures you will need but refers to other methods for some of the details. Therefore, to obtain reliable results, you should also have a thorough knowledge of these additional test methods which are found in appendix A to this part:

(a) Method 6C—Determination of Sulfur Dioxide Emissions from Stationary Sources (Instrumental Analyzer Procedure)

(b) Method 7E—Determination of Nitrogen Oxides Emissions from Stationary Sources (Instrumental Analyzer Procedure)

(c) Method 16A—Determination of Total Reduced Sulfur Emissions from Stationary Sources (Impinger Technique)

1.1 Analytes. What does Method 16C determine?

| Analyte | CAS No. |
|---|---|
| Total reduced sulfur including | N/A |
| Dimethyl disulfide (DMDS), [$(CH_3)_2S_2$] | 62–49–20 |
| Dimethyl sulfide (DMS), [$(CH_3)_2S$] | 75–18–3 |
| Hydrogen sulfide ($H_2S$) | 7783–06–4 |
| Methyl mercaptan (MeSH), [$CH_4S$] | 74–93–1 |
| Reported as: Sulfur dioxide ($SO_2$) | 7449–09–5 |

1.2 Applicability. This method is applicable for determining TRS emissions from recovery furnaces (boilers), lime kilns, and smelt dissolving tanks at kraft pulp mills, and from other sources when specified in an applicable subpart of the regulations.

1.3 Data Quality Objectives. Adherence to the requirements described in Method 16C will enhance the quality of the data obtained from air pollutant sampling methods.

*2.0 Summary of Method*

2.1 An integrated gas sample is extracted from the stack. The $SO_2$ is removed selectively from the sample using a citrate buffer solution. The TRS compounds are then thermally oxidized to $SO_2$ and determined as $SO_2$ by an instrumental analyzer. This method is a combination of the sampling procedures of Method 16A and the analytical procedures of Method 6C (referenced in Method 7E), with minor modifications to facilitate their use together.

*3.0 Definitions*

*Analyzer calibration error, Calibration curve, Calibration gas, Low-level gas, Mid-level gas, High-level gas, Calibration drift, Calibration span, Data recorder, Direct calibration mode, Gas analyzer, Interference check, Measurement system, Response time, Run, System calibration mode, System performance check,* and *Test* are the same as used in Methods 16A and 6C.

*4.0 Interferences*

4.1 Reduced sulfur compounds other than those regulated by the emission standards, if present, may be measured by this method. Compounds like carbonyl sulfide, which is partially oxidized to $SO_2$ and may be present in a lime kiln exit stack, would be a positive interferent. Interferences may vary among instruments, and instrument-specific interferences must be evaluated through the interference check.

4.2 Particulate matter from the lime kiln stack gas (primarily calcium carbonate) can cause a negative bias if it is allowed to enter the citrate scrubber; the particulate matter will cause the pH to rise and $H_2S$ to be absorbed before oxidation. Proper use of the particulate filter, described in Section 6.1.3 of Method 16A, will eliminate this interference.

*5.0 Safety*

5.1 Disclaimer. This method may involve hazardous materials, operations, and equipment. This test method may not address all of the safety problems associated with its use. It is the responsibility of the user to establish appropriate safety and health practices before performing this test method.

5.2 Hydrogen Sulfide. Hydrogen sulfide is a flammable, poisonous gas with the odor of rotten eggs. Hydrogen sulfide is extremely hazardous and can cause collapse, coma, and death within a few seconds of one or two inhalations at sufficient concentrations. Low concentrations irritate the mucous membranes and may cause nausea, dizziness, and headache after exposure. It is the responsibility of the user of this test method to establish appropriate safety and health practices.

*6.0 Equipment and Supplies*

What do I need for the measurement system? The measurement system is similar to those applicable components in Methods 16A and 6C. An example measurement system is shown in Figure 16C–1 and component parts are discussed below. Modifications to the apparatus are accepted provided the performance criteria in Section 13.0 are met.

6.1 Probe. Teflon tubing, 6.4-mm (¼-in.) diameter, sequentially wrapped with heat-resistant fiber strips, a rubberized heat tape (plug at one end), and heat-resistant adhesive tape. A flexible thermocouple or other suitable temperature measuring device must be placed between the Teflon tubing and the fiber strips so that the temperature can be monitored to prevent softening of the probe. The probe must be sheathed in stainless steel to provide in-stack rigidity. A series of bored-out stainless steel fittings placed at the front of the sheath will prevent moisture and particulate from entering between the probe and sheath. A 6.4-mm (¼-in.) Teflon elbow (bored out) must be attached to the inlet of the probe, and a 2.54 cm (1 in.) piece of Teflon tubing must be attached at the open end of the elbow to permit the opening of the probe to be turned away from the particulate stream; this will reduce the amount of particulate drawn into the sampling train. The probe is depicted in Figure 16A–2 of Method 16A.

6.2 Probe Brush. Nylon bristle brush with handle inserted into a 3.2-mm (⅛-in.) Teflon tubing. The Teflon tubing should be long enough to pass the brush through the length of the probe.

6.3 Particulate Filter. 50-mm Teflon filter holder and a 1- to 2-µm porosity, Teflon filter (may be available through Savillex Corporation, 5325 Highway 101, Minnetonka, Minnesota 55343, or other suppliers of filters). The filter holder must be maintained in a hot box at a temperature sufficient to prevent moisture condensation. A temperature of 121 °C (250 °F) was found to be sufficient when testing a lime kiln under sub-freezing ambient conditions.

6.4 $SO_2$ Scrubber. Three 300-ml Teflon segmented impingers connected in series with flexible, thick-walled, Teflon tubing. (Impinger parts and tubing may be available through Savillex or other suppliers.) The first two impingers contain 100 ml of citrate buffer, and the third impinger is initially dry. The tip of the tube inserted into the solution should be constricted to less than 3 mm (⅛-in.) ID and should be immersed to a depth of at least 5 cm (2 in.).

6.5 Combustion Tube. Quartz glass tubing with an expanded combustion chamber 2.54 cm (1 in.) in diameter and at least 30.5 cm (12 in.) long. The tube ends should have an outside diameter of 0.6 cm (¼-in.) and be at least 15.3 cm (6 in.) long. This length is necessary to maintain the quartz-glass connector near ambient temperature and thereby avoid leaks. Alternative combustion tubes are acceptable provided they are shown to combust TRS at concentrations encountered during tests.

6.6 Furnace. A furnace of sufficient size to enclose the combustion chamber of the combustion tube with a temperature regulator capable of maintaining the temperature at 800 ± 100 °C (1472 ± 180 °F). The furnace operating temperature should be checked with a thermocouple to ensure accuracy.

6.7 Sampling Pump. A leak-free pump is required to pull the sample gas through the system at a flow rate sufficient to minimize the response time of the measurement system and constructed of material that is non-reactive to the gas it contacts. For dilution-type measurement systems, an eductor pump may be used to create a vacuum that draws the sample through a critical orifice at a constant rate.

6.8 Calibration Gas Manifold. The calibration gas manifold must allow the introduction of calibration gases either directly to the gas analyzer in direct calibration mode or into the measurement system, at the probe, in system calibration mode, or both, depending upon the type of system used. In system calibration mode, the system must be able to flood the sampling probe and vent excess gas. Alternatively, calibration gases may be introduced at the calibration valve following the probe. Maintain a constant pressure in the gas manifold. For in-stack dilution-type systems, a gas dilution subsystem is required to transport large volumes of purified air to the sample probe and a probe controller is needed to maintain the proper dilution ratio.

6.9 Sample Gas Manifold. The sample gas manifold diverts a portion of the sample to the analyzer, delivering the remainder to the by-pass discharge vent. The manifold should also be able to introduce calibration gases directly to the analyzer. The manifold must be made of material that is non-reactive to $SO_2$ and be configured to safely discharge the bypass gas.

6.10 $SO_2$ Analyzer. You must use an instrument that uses an ultraviolet, non-dispersive infrared, fluorescence, or other detection principle to continuously measure $SO_2$ in the gas stream provided it meets the performance specifications in Section 13.0.

6.11 Data Recording. A strip chart recorder, computerized data acquisition system, digital recorder, or data logger for recording measurement data must be used.

*7.0 Reagents and Standards*

**Note:** Unless otherwise indicated, all reagents must conform to the specifications established by the Committee on Analytical Reagents of the American Chemical Society. When such specifications are not available, the best available grade must be used.

7.1 Water. Deionized distilled water must conform to ASTM Specification D 1193–77 or 91 Type 3 (incorporated by reference—see § 60.17). The $KMnO_4$ test for oxidizable organic matter may be omitted when high concentrations of organic matter are not expected to be present.

7.2 Citrate Buffer. Dissolve 300 g of potassium citrate (or 284 g of sodium citrate) and 41 g of anhydrous citric acid in 1 liter of water (200 ml is needed per test). Adjust the pH to between 5.4 and 5.6 with potassium citrate or citric acid, as required.

7.3 Calibration Gas. Refer to Section 7.1 of Method 7E (as applicable) for the calibration gas requirements. Example calibration gas mixtures are listed below.

(a) $SO_2$ in nitrogen ($N_2$).
(b) $SO_2$ in air.
(c) $SO_2$ and $CO_2$ in $N_2$.
(d) $SO_2$ and $O_2$ in $N_2$.
(e) $SO_2/CO_2/O_2$ gas mixture in $N_2$.
(f) $CO_2/NO_X$ gas mixture in $N_2$.

(g) $CO_2/SO_2/NO_X$ gas mixture in $N_2$.

For fluorescence-based analyzers, the $O_2$ and $CO_2$ concentrations of the calibration gases as introduced to the analyzer must be within 1 percent (absolute) $O_2$ and 1 percent (absolute) $CO_2$ of the $O_2$ and $CO_2$ concentrations of the effluent samples as introduced to the analyzer. Alternatively, for fluorescence-based analyzers, use calibration blends of $SO_2$ in air and the nomographs provided by the vendor to determine the quenching correction factor (the effluent $O_2$ and $CO_2$ concentrations must be known). This requirement does not apply to ambient-level fluorescence analyers that are used in conjunction with sample dilution systems.

7.4 System Performance Check Gas. You must use hydrogen sulfide (100 ppmv or less) in nitrogen, stored in aluminum cylinders with concentration certified by the manufacturer.

**Note:** Alternatively, hydrogen sulfide recovery gas generated from a permeation device gravimetrically calibrated and certified at some convenient operating temperature may be used. The permeation rate of the device must be such that at the appropriate dilution gas flow rate, an $H_2S$ concentration can be generated in the range of the stack gas or within 20 percent of the emission standard.

7.5 Interference Check. Examples of test gases for the interference check are listed in Table 7E–3 of Method 7E.

*8.0 Sample Collection, Preservation, Storage, and Transport*

8.1 Pre-sampling Tests. Before measuring emissions, perform the following procedures:

(a) Calibration gas verification,

(b) Calibration error test,

(c) System performance check,

(d) Verification that the interference check has been satisfied.

8.1.1 Calibration Gas Verification. Obtain a certificate from the gas manufacturer documenting the quality of the gas. Confirm that the manufacturer certification is complete and current. Ensure that your calibration gas certifications have not expired. This documentation should be available on-site for inspection. To the extent practicable, select a high-level gas concentration that will result in the measured emissions being between 20 and 100 percent of the calibration span.

8.1.2 Analyzer Calibration Error Test. After you have assembled, prepared, and calibrated your sampling system and analyzer, you must conduct a 3-point analyzer calibration error test before the first run and again after any failed system performance check or failed drift test to ensure the calibration is acceptable. Introduce the low-, mid-, and high-level calibration gases sequentially to the analyzer in direct calibration mode. For each calibration gas, calculate the analyzer calibration error using Equation 16C–1 in Section 12.2. The calibration error for the low-, mid-, and high-level gases must not exceed 5 percent or 0.5 ppmv. If the calibration error specification is not met, take corrective action and repeat the test until an acceptable 3-point calibration is achieved.

8.1.3 System Performance Check. Same as in Method 16A, Section 8.5, except samples need not be 30 minutes in duration, and the TRS sample concentration measured between system performance checks is corrected by the average of the two system performance samples. System performance checks are conducted before sampling begins (optional) and after each sample run (mandatory).

8.1.4 Interference Check. Same as in Method 7E, Section 8.2.7.

8.2 Measurement System Preparation.

8.2.1 For the $SO_2$ scrubber, measure 100 ml of citrate buffer into the first and second impingers; leave the third impinger empty. Immerse the impingers in an ice bath, and locate them as close as possible to the filter heat box. The connecting tubing should be free of loops. Maintain the probe and filter temperatures sufficiently high to prevent moisture condensation, and monitor with a suitable temperature sensor. Prepare the oxidation furnace and maintain at 800 ± 100 °C (1472 ± 180 °F).

8.2.2 Citrate Scrubber Conditioning Procedure. Condition the citrate buffer scrubbing solution by pulling stack gas through the Teflon impingers as described in Section 8.4.1.

8.3 Pretest Procedures. After the complete measurement system has been set up at the site and deemed to be operational, the following procedures must be completed before sampling is initiated.

8.3.1 Leak-Check. Appropriate leak-check procedures must be employed to verify the integrity of all components, sample lines, and connections. For components upstream of the sample pump, attach the probe end of the sample line to a manometer or vacuum gauge, start the pump and pull a vacuum greater than 50 mm (2 in.) Hg, close off the pump outlet, and then stop the pump and ascertain that there is no leak for 1 minute. For components after the pump, apply a slight positive pressure and check for leaks by applying a liquid (detergent in water, for example) at each joint. Bubbling indicates the presence of a leak. As an alternative to the initial leak-test, the system performance check in Section 8.3.2 may be performed to verify the integrity of components.

8.3.2 Initial System Performance Check. A system performance check using the test gas (Section 7.4) is required prior to testing to validate the sampling train components and procedure.

8.4 Sample Collection and Analysis

8.4.1 After performing the required pretest procedures described in Section 8.1, insert the sampling probe into the test port ensuring that no dilution air enters the stack through the port. Condition the sampling system and citrate buffer solution for a minimum of 15 minutes before beginning analysis. (This preconditioning may not be necessary if the initial system performance check is performed.) Begin the sampling and analysis. Determine the concentration of $SO_2$ for the prescribed sample or run time. Method 16 defines a test run as sampling over a period of not less than 3 hours or more than 6 hours when testing kraft pulp mills. For Method 16C to be consistent with Method 16, a run may be obtained by: (1) sampling for three 60-minute intervals or (2) sampling for a 3-hour interval. (Three runs constitute a test.)

8.5 Post-Run Evaluations

8.5.1 System Performance Check. Perform a post-run system performance check (Section 8.5 of Method 16A) before replacing the citrate buffer solution and particulate filter and before the probe is cleaned. The check results must not exceed the 100 ± 20 percent limit set forth in Section 13.3. If this limit is exceeded, the intervening run or runs are considered invalid. However, if the recovery efficiency is not in the 100 ± 20 percent range, but the results do not affect the compliance or noncompliance status of the affected facility, the Administrator may decide to accept the results of the compliance test.

8.5.2 Calibration Drift. After a run or series of runs, not to exceed a 24-hour period after initial calibration, perform a calibration drift test using a calibration gas (preferably the level that best approximates the sample concentration) in direct calibration mode. This drift must not differ from the manufacturer certified concentration of the gas by more than 3 percent or 0.5 ppm. If the drift exceeds this limit, the intervening run or runs are considered valid, but a new analyzer calibration test must be performed and passed before continuing sampling.

*9.0 Quality Control*

| Section | Quality control measure | Effect |
|---|---|---|
| 8.1 | Sampling equipment leak-check and calibration. | Ensures accurate measurement of sample gas flow rate, sample volume. |
| 8.1.2 | Analyzer calibration error | Establishes initial calibration accuracy within 2%. |
| 8.3.2, 8.5.1 | System performance check | Ensures accuracy of sampling/analytical procedure within 20%. |
| 8.5.2 | Calibration drift test | Ensures a stable calibration within 3%. |
| 10.0 | Interference check | Checks for analytical interferences. |

*10.0 Calibration*

10.1 Calibrate the system using the gases described in Section 7.3. The initial 3-point calibration error test as described in Section 8.1.2 is required and must meet the specifications in Section 13 before you start the test. We recommend you conduct an initial system performance test described in Section 8.1.4 as well before the test to validate the sampling components and procedures before sampling. After the test commences, a system performance check is required after each run. You must include a copy of the manufacturer's certification of the calibration gases used in the testing as part of the test report. This certification must include the 13 documentation requirements in the EPA Traceability Protocol for Assay and Certification of Gaseous Calibration Standards, September 1997, as amended August 25, 1999.

*11.0 Analytical Procedure*

Because sample collection and analysis are performed together (*see* Section 8.0), additional discussion of the analytical procedure is not necessary.

*12.0 Calculations and Data Analysis*

12.1 Nomenclature

ACE = Analyzer calibration error, percent of calibration span.
$B_{WO}$ = Fraction of volume of water vapor in the gas stream.
CD = Calibration drift, percent.
$C_{Dir}$ = Measured concentration of a calibration gas (low, mid, or high) when introduced in direct calibration mode, ppmv.
$C_{H2S}$ = Concentration of the system performance check gas, ppmv $H_2S$.
$C_S$ = Measured concentration of the system performance gas when introduced in system calibration mode, ppmv $H_2S$.
$C_V$ = Manufacturer certified concentration of a calibration gas (low, mid, or high), ppmv $SO_2$.
$C_{SO2}$ = Sample $SO_2$ concentration, ppmv.
$C_{TRS}$ = Total reduced sulfur concentration corrected for system performance and adjusted to dry conditions, ppmv.
SP = System performance, percent.

12.2 Analyzer Calibration Error. Use Equation 16C–1 to calculate the analyzer calibration error for the low-, mid-, and high-level calibration gases.

$$ACE = \frac{C_{Dir} - C_v}{C_v} \times 100 \qquad \text{Eq. 16C-1}$$

12.3 System Performance. Use Equation 16C–2 to calculate the system performance.

$$SP = \frac{C_S - C_{H2S}}{C_{H2S}} \times 100 \qquad \text{Eq. 16C-2}$$

12.4 Calibration Drift. Use Equation 16C–3 to calculate the calibration drift at a single concentration level after a run or series of runs (not to exceed a 24-hr period) from initial calibration. Compare the calibration gas response to the original response obtained for the gas in the initial analyzer calibration test ($ACE_i$).

$$CD = \left| ACE_i - ACE_n \right| \qquad \text{Eq. 16C-3}$$

12.5 TRS Concentration as $SO_2$. For each sample or test run, calculate the arithmetic average of $SO_2$ concentration values (*e.g.,* 1-minute averages). Then calculate the sample TRS concentration using Equation 16C–4.

$$C_{TRS} = \frac{\overline{C_{SO2}}}{1 - |SP| - B_{WO}} \qquad \text{Eq. 16C-4}$$

*13.0 Method Performance*

13.1 Analyzer Calibration Error. At each calibration gas level (low, mid, and high), the calibration error must either not exceed 5.0 percent of the calibration gas concentration or $|C_s - C_v|$ must be ≤ 0.5 ppmv.

13.2 System Performance. The system performance check result must be within 20 percent of the system performance gas concentration. Alternatively, the results are acceptable if $|C_s - C_{dir}|$ is ≤ 0.5 ppmv .

13.3 Calibration Drift. The calibration drift at the end of any run or series of runs within a 24-hour period must not differ by more than 3 percent from the original ACE at that level or $|ACEi - ACE_n|$ must not exceed 0.5 ppmv.

13.4 Interference Check. For the analyzer, the total interference response (*i.e.,* the sum of the interference responses of all tested gaseous components) must not be greater than 2.50 percent of the calibration span. The results are also acceptable if the sum of the responses does not exceed 0.5 ppmv for a calibration span of 5 to 10 ppmv, or 0.2 ppmv for a calibration span < 5 ppmv.

*14.0 Pollution Prevention [Reserved]*

*15.0 Waste Management [Reserved]*

*16.0 References*

1. The references are the same as in Section 16.0 of Method 16, Section 17.0 of Method 16A, and Section 17.0 of Method 6C.

2. National Council of the Paper Industry for Air and Stream Improvement, Inc., A Study of TRS Measurement Methods. Technical Bulletin No. 434. New York, NY. May 1984. 12p.

3. Margeson, J.H., J.E. Knoll, and M.R. Midgett. A Manual Method for TRS Determination. Draft available from the authors. Source Branch, Quality Assurance Division, U.S. Environmental Protection Agency, Research Triangle Park, NC 27711.

*17.0 Tables, Diagrams, Flowcharts, and Validation Data [Reserved]*

[FR Doc. 2010–21954 Filed 9–1–10; 8:45 am]

**BILLING CODE 6560–50–P**

## ENVIRONMENTAL PROTECTION AGENCY

## 40 CFR Part 140

**[EPA–R09–OW–2010–0438; FRL–9196–3]**

**RIN 2009–AA04**

## Marine Sanitation Devices (MSDs): Proposed Regulation To Establish a No Discharge Zone (NDZ) for California State Marine Waters

**AGENCY:** Environmental Protection Agency (EPA).

**ACTION:** Proposed rule.

**SUMMARY:** EPA is proposing to establish a No Discharge Zone (NDZ) for sewage discharges from: Large passenger vessels; and oceangoing vessels of 300 gross tons or more (referred to throughout this proposed rule as "Large oceangoing vessels") with two days or more sewage holding capacity to California State marine waters pursuant to Section 312(f)(4)(A) of the Clean Water Act (CWA), 33 U.S.C. 1322(f)(4)(A). This action is being taken in response to an April 5, 2006 application from the California State Water Resources Control Board (State) requesting establishment of this NDZ. Under Section 312(f)(4)(A), if EPA determines upon application by a State that the protection and enhancement of the quality of specified waters within such State requires such a prohibition, then EPA shall by regulation completely prohibit the discharge of any sewage (whether treated or not) from a vessel into such waters. California State marine waters would be defined as the territorial sea measured from the baseline, as determined in accordance with the Convention on the Territorial Sea and the Contiguous Zone, and extending seaward a distance of three miles, and would also include all enclosed bays and estuaries subject to tidal influences from the Oregon border to the Mexican border. (Federal Clean Water Act Section 502(8)). State marine waters also extend three miles from State islands, including the Farallones and the Northern and Southern Channel Islands. A map of California State marine waters can be obtained or viewed at the EPA's Web site at *http://www.epa.gov/region9/water/no-discharge/overview.html,* or by calling (415) 972–3476. It should be noted that effective March 2009, the National Oceanic and Atmospheric Administration (NOAA) established prohibitions on the discharge of sewage from large vessels in waters within the boundaries of the four National Marine

Sanctuaries along the California coast (73 FR 70487).

**DATES:** Comments must be submitted to EPA on or before November 1, 2010.

**ADDRESSES:** Submit comments, identified by docket number EPA–R09–OW–2010–0438, by one of the following methods: 1. *Federal eRulemaking Portal: http://www.regulations.gov.* Follow the on-line instructions. 2. *E-mail: ota.allan@epa.gov.* 3. *Mail or deliver:* Allan Ota (WTR–8), U.S. Environmental Protection Agency Region IX, 75 Hawthorne Street, San Francisco, CA 94105–3901.

*Instructions:* All comments will be included in the public docket without change and may be made available online at *http://www.regulations.gov,* including any personal information provided, unless the comment includes Confidential Business Information (CBI) or other information whose disclosure is restricted by statute. Information that you consider CBI or otherwise protected should be clearly identified as such and should not be submitted through *http://www.regulations.gov* or e-mail. *http://www.regulations.gov* is an "anonymous access" system, and EPA will not know your identity or contact information unless you provide it in the body of your comment. If you send e-mail directly to EPA, your e-mail address will be automatically captured and included as part of the public comment. If EPA cannot read your comment due to technical difficulties and cannot contact you for clarification, EPA may not be able to consider your comment.

*Docket:* The index to the docket for this action is available electronically at *http://www.regulations.gov* and in hard copy at EPA Region IX, 75 Hawthorne Street, San Francisco, California. While all documents in the docket are listed in the index, some information may be publicly available only at the hard copy location (*e.g.,* copyrighted material), and some may not be publicly available in either location (*e.g.,* CBI). To inspect the hard copy materials, please schedule an appointment during normal business hours with the contact listed in the **FOR FURTHER INFORMATION CONTACT** section.

**FOR FURTHER INFORMATION CONTACT:** Allan Ota, Wetlands Office, Water Division, EPA Region 9, 75 Hawthorne Street (WTR–8), San Francisco, CA 94105, *(ota.allan@epa.gov).*

**SUPPLEMENTARY INFORMATION:**

## I. Background of Clean Water Act Section 312

Clean Water Act Section 312, 33 U.S.C. 1322, (hereafter referred to as "Section 312"), regulates the discharge of sewage from vessels into the navigable waters. Pollutants most frequently associated with sewage discharges include solids, nutrients, pathogens, petroleum products, heavy metals, pesticides, pharmaceuticals, and other potentially harmful compounds.[1] Sewage discharges contaminate shellfish beds, pollute drinking water supplies, harm fish and other aquatic wildlife, and cause damage to coral reefs.

Direct contact with these pollutants can have serious human health effects, with children, the elderly, and individuals with compromised immune systems being most susceptible. While data specifically associating disease outbreaks with sewage discharges from vessels are not available, data summarizing disease outbreaks and beach closures due to waterborne pathogens are available. During 2005–2006, the most recent period for which data are available, waterborne disease outbreaks associated with pathogen exposures in recreational water were reported by 31 States and territories through the Centers for Disease Control's Waterborne Disease and Outbreak Surveillance System.[2] During this period, 4,412 people were reported ill, resulting in 116 hospitalizations and five deaths. Thirty of these outbreaks were reported in California.[3] These data include exposures to pathogens at beaches and other natural swimming locations, but pathogen sources were not specifically identified.

When pathogen levels exceed water quality standards, States and territories may issue swimming advisories or close beaches to swimming. EPA's Beach Monitoring and Notification program reports that of the 3,740 coastal beaches monitored in 2008, 1,210 (32 percent) had at least one swimming closure or advisory and coastal beaches were under swimming closures or advisories about 5 percent of the time, similar to the previous two years. For 2007, the last year for which data was available, 138 of the 424 monitored beaches in California had at least one water quality advisory due to water quality standard exceedances.[4] According to the State's California Beach Water Quality Information Page in 2005, the last year reported, there were 104 beach closure events for a total of 486 beach days because monitoring indicated elevated bacteria levels.[5]

Shellfish beds are also vulnerable to coastal pollutants resulting in closures when water quality standards are exceeded. In 2001, the last comprehensive national study of water quality data at shellfish beds revealed that 40 percent were unsuitable for harvesting.[6] Pathogens from a variety of sources, including urban and agricultural runoff, vessel discharges, sewage treatment plants and septic systems can contribute to shellfish bed contamination, closure, and illness in human shellfish consumers.[7]

Section 312(h) prohibits vessels equipped with installed toilet facilities from operating on the navigable waters (which include the three mile territorial seas), unless the vessel is equipped with an operable marine sanitation device (MSD), certified by the Coast Guard to meet applicable performance standards. 33 U.S.C. 1322(h). The provisions of section 312 are implemented jointly by EPA and the Coast Guard. EPA sets performance standards for MSDs and is involved in varying degrees in the establishment of no discharge zones (NDZs) for vessel sewage. 33 U.S.C. 1322(b) and (f). The Coast Guard is responsible for developing regulations governing the design, construction, certification, installation and operation of MSDs, consistent with EPA's performance standards. 33 U.S.C. 1322(b) and (g); see also 33 CFR part 159. The Coast Guard's responsibility includes certifying MSDs for installation on U.S. flagged vessels. There are three types of MSDs:

- Type I MSDs are flow-through treatment devices that commonly use maceration and disinfection for the treatment of sewage. Type I devices may be installed only on vessels less than or equal to 65 feet in length. The performance standard applied to Type I MSDs is to produce an effluent with no more than 1000 fecal coliform count per 100 mL, with no visible floating solids.
- Type II MSDs are also flow-through treatment devices, which may employ biological treatment and disinfection, although some Type II MSDs use maceration and disinfection. Type II MSDs may be installed on vessels of any

[1] Page 33 of the April 5, 2006 State Application/

[2] Yoder, *et al.,* 2008, Surveillance for Waterborne Disease and Outbreaks Associated with Recreational Water Use and Other Aquatic Facility-Associated Health Events—United States, 2005–2006. Centers for Disease Control, Surveillance Summaries, 57(SS09), September 12, 2008.

[3] Yoder, *et al.,* 2008.

[4] EPA, 2009, National Summary: 2008 Swimming Season Update. EPA 823–F–09–005, May 2009.

[5] State Water Resources Control Board, California Beach Water Quality Information page: *http://www.swrcb.ca.gov/water_issues/programs/beaches/beach_water_quality/.*

[6] EPA, 2001. National Coastal Condition Report. United States Environmental Protection Agency. Office of Research and Development and Office of Water, Washington, DC EPA–620/R–01/005.

[7] EPA National Estuary Program: *http://www.epa.gov/nep/challenges.html.*

length. The performance standard applied to Type II MSDs is to produce an effluent with no more than 200 fecal coliform per 100 mL, and no more than 150 mg total suspended solids per liter.

• Type III MSDs are holding tanks, where sewage is stored until it can be disposed of shore-side or at sea (beyond three miles from shore). Type III MSDs may be installed on vessels of any length. [33 U.S.C. 1322 (b and h), 40 CFR 140.3; 33 CFR part 159].

CWA section 312 generally preempts State regulation of the discharge of sewage from vessels: "no State or political subdivision thereof shall adopt or enforce any statute or regulation of such State or political subdivision with respect to the design, manufacture, or installation or use of any [MSD] on any vessel subject to the provision of [CWA section 312]." CWA § 312(f)(1)(A), 33 U.S.C. 1322(f)(1)(A). Under Section 312(f), however, States may, in certain circumstances, request that EPA establish no discharge zones ("NDZs") for vessel sewage or, after required findings are made by EPA, establish such zones themselves.

There are three types of NDZ designations. First, under section 312(f)(3) States may designate portions or all of their waters as NDZs if the State determines that the protection and enhancement of the quality of the waters require greater environmental protection than provided by current Federal standards. However, no such prohibition applies to discharges until EPA determines that adequate facilities for the safe and sanitary removal and treatment of sewage from all vessels are reasonably available for the waters in the NDZ. Second, a State may apply under section 312(f)(4)(A) for EPA's determination that the protection and enhancement of the quality of specified waters within such State requires a prohibition. In contrast to section 312(f)(3) NDZ designations, section 312(f)(4) does not require EPA to determine that adequate pump out facilities are reasonably available for all vessels. Upon this determination, EPA shall by regulation completely prohibit the discharge from a vessel of any sewage (whether treated or not) into such waters. Lastly, a State may apply under section 312(f)(4)(B) for EPA to establish, by regulation, a drinking water intake zone which prohibits the discharge of sewage into that zone. [33 U.S.C. 1322(f), 40 CFR 140.4] California applied to EPA to establish the proposed NDZ under CWA section 312(f)(4)(A).

While section 312(f)(3) has been used to prohibit discharges in an entire State's waters, today's NDZ, if finalized, would be the first CWA section 312(f)(4)(A) NDZ to cover an entire State's waters. It would also be the first NDZ to only apply to discrete classes of vessels. Today's proposed rule would apply to all California marine waters and to two specific types of vessels—(1) passenger vessels of 300 gross tons or more having berths or overnight accommodations, and (2) oceangoing vessels of 300 gross tons or more with two days or more of sewage holding capacity. As discussed in Sections V and VI of the preamble, the proposed NDZ will not alter existing NDZs in California, all of which were enacted pursuant to 312(f)(3). Those NDZs remain in effect for all vessels. These NDZs cover a relatively small portion of California's marine waters, although as discussed below, certain discharges of sewage are also prohibited under NOAA regulations for marine sanctuaries in California waters.

## II. Enforcement

The U.S. Coast Guard and the States are authorized to enforce the requirements of Section 312. 33 U.S.C. 1322(k). Persons who tamper with an installed certified MSD, or who operate vessels subject to section 312 without operable MSDs, are subject to civil penalties of up to $5,000 and $2,000, respectively, for each violation; manufacturers who sell a non-certified MSD, or who sell a vessel subject to section 312 that is not equipped with a certified MSD, are subject to civil penalties of up to $5,000 for each violation. 33 U.S.C. 1322(j). For more information see 33 U.S.C. 1322(j) and the U.S. Coast Guard's regulations at 33 CFR part 159.[8]

## III. The State's Application for This NDZ

The State of California declared the importance of protecting and enhancing coastal water quality when it enacted legislation in 2003–2004 to limit pollution from large passenger vessels Assembly Bill (AB) 121, AB 906, AB 2093, and AB 2672 (available in the docket for today's proposal). The new legislation required a number of actions to address and reduce sewage and other pollution discharges from large vessels. Specifically, AB 2672 required the State Water Resources Control Board (State Board) to submit an application to the EPA seeking Federal prohibition of discharges of sewage from large passenger vessels to State waters.[9] Similarly, the State enacted the California Clean Coast Act of 2005 (Senate Bill (SB) 771) to address and reduce sewage and other pollution discharges from large oceangoing vessels with sufficient holding tank capacity. SB 771 directed the State Board to submit an application to the EPA seeking prohibition of sewage discharges from large oceangoing vessels with "sufficient holding tank capacity" to contain sewage while the vessels are within the marine waters of the State. In enacting this legislation, the State found that California's coastal waters warrant a higher level of protection and determined that protection and enhancement of coastal water quality requires a reduction in vessel sewage discharges to the State's coastal waters. The legislation also provided that "[i]t is not the Legislature's intent to establish for the marine waters of the State a no discharge zone for sewage from all vessels, but only for a class of vessels."[10]

The information submitted by the State in its application for this NDZ (available in the docket for today's proposal) documents the importance of California's marine waters, the sensitivity of all of California's marine waters to sewage discharges, and the need for the proposed NDZ to protect and enhance those waters.

## IV. Who is affected by this rule?

The proposed rule would completely prohibit the discharge of sewage (whether treated or not) from all large passenger vessels, as defined by 46 U.S.C. 2101(22), of 300 gross tons or more and which have berths or overnight accommodations, and private, commercial, government, and military oceangoing vessels of 300 gross tons or more. The State's definition of large passenger vessels in AB 2672 excluded all noncommercial, government and military vessels, treating them as "oceangoing ships." For this proposed rule EPA uses the generally applicable definition of "passenger vessel" from Title 46 of the US Code, but, like the State, applies the rule only to passenger vessels of 300 gross tons or more and which have berths or overnight accommodations. A large oceangoing vessel means a private, commercial, government, or military vessel of 300 gross tons or more.

Certain Department of Defense (DoD) vessels and activities may be exempt from these requirements. Pursuant to CWA Section 312(d), the Secretary of

[8] U.S. Coast Guard MSD Requirements: *http://www.uscg.mil/hq/cg5/cg5213/msd.asp.*

[9] California State Assembly Bill 2672, Section 1(c).

[10] California Senate Bill 771, Chapter 588, Section 21.

Defense promulgated DoD 4715.06–R1 "Regulations on Vessels Owned or Operated by the Department of Defense" (January 2005), which explains the circumstances under which DoD may exempt its vessels from the sewage discharge requirements of Section 312, including NDZs, because compliance would excessively and unreasonably detract from the vessel's military characteristics, effectiveness, or safety, and not be in the interest of national security. Exempted vessels are nonetheless required to limit sewage discharges into U.S. navigable waters, territorial seas, and NDZs to the maximum extent practicable without endangering the health, safety, or welfare of the crew or other personnel aboard.

The State legislation limits the prohibition on discharges of sewage to large oceangoing vessels with "sufficient holding tank capacity." SB 771 defined "sufficient holding tank capacity" to mean a holding tank of sufficient capacity to contain sewage while the oceangoing ship is within the marine waters of the State.[11] For the purposes of this proposed rule, "sufficient holding tank capacity" means two days or more of sewage holding capacity based on the ability to hold at least two day's sewage while in State marine waters. A suitable holding tank is a tank that was designed, constructed, and certified by the ship's flag administration to hold sewage. Two days of sewage holding capacity is consistent with California State Lands Commission 2006 Vessel Survey Data, required under SB 771, that showed oceangoing vessel port calls averaged two days in duration.[12] The two day duration was established based on this data and through consultation with the State. For purposes of this proposed rule, the two-day holding tank capacity would be determined by multiplying the crew capacity of a vessel by the average sewage generation rate of 8.4 gallons of sewage per day, per person.[13] Oceangoing vessel capacity is determined by: (1) A certificate of inspection issued by the US Coast Guard for US flagged vessels; or (2) a MARPOL Annex 4 certificate issued by the signatory State for foreign flagged vessels. For either certificate, the maximum number of passengers and crew is identified for the vessel.

## V. EPA's Determination That the Protection and Enhancement of the Quality of California Coastal Waters Requires This NDZ

*Importance of California Waters:* California's coastal waters contain a wide variety of unique, nationally important marine environments that support rich biological communities and a wide range of recreational, commercial, conservation, research, educational, and aesthetic values. Coastal areas contain the greatest variety of habitats in California, including tidepools, estuaries, embayments, headlands, sandy beaches, mudflats, tidal wetlands, eelgrass beds, kelp forests, and deep ocean floor. California's highly varied marine environments support high levels of biological diversity and habitat for several dozen species listed as endangered, threatened, or of concern under Federal or State law, including 10 species of marine mammals, 4 species of anadromous fish, and 9 species of sea birds. The State has also established essential habitat along much of the coast for nearly 100 species of fish.

The unique values associated with California's coastal marine environment have been recognized through the creation of a network of more than 200 protected areas, reserves, sanctuaries, and monuments that together afford special resource protection status to the vast majority of California coastal waters. For example, the four Federally designated National Marine Sanctuaries (Cordell Bank, Gulf of the Farallones, Monterey Bay, and Channel Islands) in California occupy approximately one-third of the coastline and over 9,373 square miles of marine waters (1,726 within State waters) while the California Coastal National Monument protects more than 20,000 small islands, reefs, and pinnacles. The National Park Service manages 6 park facilities along the California coast including the Channel Islands and Redwood National Parks and Golden Gate National Recreation Area. Thirteen national wildlife refuges and 22 marine reserves have been established along the California coast, several of which cover substantial portions of marine embayments and estuarine areas. Three National Estuarine Research Reserves have been designated under the Coastal Zone Management Act as a partnership between the National Oceanic and Atmospheric Administration (NOAA) and the State, including San Francisco Bay; Elkhorn Slough; and Tijuana River. NOAA, has also established Essential Fish Habitat for several species along the entire California coast. The State has designated more than 80 Marine Protected Areas, 34 Areas of Special Biological Significance—Water Quality Protection Areas, 14 Ecological Reserves, 17 State and University of California Reserves, 20 Marine Refuges, and 14 Underwater Parks and Preserves intended to preserve and enhance living marine resources, cultural and historical resources, and recreational and research opportunities. The State, pursuant to CWA 312(f)(3), previously established ten individual NDZs along the California coast. These NDZs were established after EPA made the necessary finding that adequate pump out facilities are reasonably available in the areas of the NDZs.

Following establishment of the four federally recognized National Marine Sanctuaries along the California Coast, NOAA promulgated regulatory revisions to better address their concerns with potential impacts from vessel discharges by prohibiting discharges of treated and untreated sewage from cruise ships, and from large vessels with sufficient holding tank capacity to hold sewage while within the Sanctuaries.[14] NOAA Stated that both treated and untreated vessel sewage are more concentrated than domestic land-based sewage and may introduce disease causing microorganisms into the marine environment and increase nutrients that can lead to eutrophication and oxygen-depleted "dead zones." As shown in Table 1, the four National Marine Sanctuaries combined with the ten existing NDZs account for over 33 percent of State marine waters (38 percent including proposed expansions at the Gulf of the Farallones and Cordell Bank). These protected areas account for approximately 51 percent of the 1,624 mile California coastline. The proposed NDZ would apply to all State marine waters and would increase protections by prohibiting treated sewage discharges from the regulated classes of vessels in the remaining 67 percent of State marine waters. A map illustrating these areas can be obtained or viewed at the EPA's Web site at "http://www.epa.gov/region9/water/no-discharge/overview.html, " or by calling (415) 972–3476.

[11] California Senate Bill 771, Chapter 588, Section 6 (72401(a)).

[12] California State Lands Commission 2006 Vessel Survey.

[13] EPA's December 29, 2008 *Cruise Ship Discharge Assessment Report* found that average reported sewage generation rates were 8.4 gallons/day/person.

[14] Department of Commerce, NOAA, **Federal Register**/Vol. 73, No. 225 Published November 20, 2008/15 CFR part 922 and **Federal Register**/Vol. 74, No. 11/Friday, January 16, 2009/Rules and Regulations.

TABLE 1—STATUS OF CALIFORNIA MARINE WATERS AND TREATED SEWAGE PROTECTION

| California marine protected area | Area of California marine waters (miles 2) | Percent of California marine waters | Sewage discharges prohibited |
|---|---|---|---|
| National Marine Sanctuaries* | **1,726 | 33.05 | Yes |
| Existing NDZs*** | 29 | 0.5 | Yes |
| Proposed NDZ | 5,222 | 100 | Proposed |

*Office of NMS—NOAA, 2009.
**Area of existing NMS off California's coast and occurring outside State marine waters equals 7,647 square miles.
***EPA Region 9 GIS Center, September 2006.

Waters along the California coastline (including islands) support equally important economic, recreational, and aesthetic values. Many of these values are heavily dependent upon clean water. California's ocean economy is the largest in the nation and in 2000 alone, directly provided approximately 408,000 jobs and contributed $42.9 billion to gross State product. Seventy-seven percent of the State's population lives on or near the coast and annually, over 150 million visitor-days are spent at California beaches. California ranks first in the nation as a travel destination and its beaches are the leading destination for tourists. Coastal tourism and recreation generate more than $10 billion per year in wages and more than $20 billion per year in gross State product. In 2000, California's commercial marine fishing industry generated more than $400 million.[15]

California coastal waters are home to more than 889 water contact recreational facilities including 450 public beaches, of which 63 are units of the State Parks system. As noted above, over one third (138 out of 424) of beaches monitored in California in 2007 reported at least one water quality advisory due to water quality standard exceedances, and 104 incidents in 2005 resulted in 486 closure days at California beaches because of elevated bacteria levels.

The shellfish industry in California is vulnerable to water quality impacts from pathogens from a variety of sources including vessel discharges. For example, in 2007, the State adopted a TMDL (total maximum daily load) for pathogens to protect recreational uses and shellfish harvesting in Tomales Bay, north of San Francisco, where leases exist for nearly half of the State's shellfish growers and production of almost 20 percent of the State's oysters.[16, 17]

Coastal waters are increasingly more important for potable water supply as desalination measures are used to meet demands. There are more than 40 desalination plants in various stages of planning and operation in California.[18] Given that net potable water demand exceeds supply in many years, it is anticipated that desalination will increase as a means to meet California's projected population growth.[19] CWA Section 312(f)(4)(B) recognized the importance of prohibiting vessel sewage near drinking water intakes by authorizing States to apply to the EPA Administrator for establishment of NDZs at intake zones.

*Pollutants Affecting California Marine Waters:* These aquatic resource uses and values are threatened and impaired by pollutant discharges to most California coastal waters from a variety of land and marine activities. In addition to marine vessel discharges, other important pollutant sources include land-based wastewater treatment plant ocean outfalls, stormwater discharges, rivers and streams, thermal discharges from power plants, dredging and dredged material disposal operations, wind transport, and construction activities. Pollutants causing water quality impairment include chemicals, metals, nutrients, pathogens, sediments, and heat. Table 2 shows the current status of impaired water body segments along the California coast. In California coastal waters, 222 beach and water body segments have been designated as impaired under Section 303(d) of the CWA. Among the 222 segments, 592 pollutant-impairments that have been identified as exceeding State water quality standards still require a TMDL limit. TMDLs for an additional seventy-nine impairments have already been approved by EPA.[20] Information on impaired waters in California can be found at EPA's National Summary of Impaired Waters and TMDLs Web site at "*http://www.epa.gov/owow/tmdl/*", or by calling (415) 972–3476.

Of the 671 impairments, at least 162 are for pollutants commonly associated with sewage, including nutrients, fecal coliform, and pathogens. Pathogens alone account for approximately 120 miles of impaired coast line in the State.

TABLE 2—CALIFORNIA MARINE IMPAIRED WATER BODY SEGMENTS AND TMDLS*

| Impaired water body segments | Total pollutant impairments | Impairments associated with sewage | Approved TMDL |
|---|---|---|---|
| 222 | 671 | 162 | 79 |

*2006 CWA 303(d) list.

*Large Passenger Vessel Sewage Generation and Pollutants:* Large passenger vessels continue to increase in size and can now accommodate as many as 6,300 passengers and 2,400 crew members.[21] Because these vessels generate large volumes of sewage, the State has requested that all large passenger vessels of 300 gross tons or

[15] California's Ocean Economy, Report to the Resources Agency, State of California, The National Ocean Economics Program, 2005.

[16] West Marin Chamber of Commerce.

[17] The Tomales Bay Watershed Stewardship Plan: A Framework for Action. Tomales Bay Watershed Council, July 2003. 137 pp.

[18] June 2007 Pacific Institute Desalination Report.

[19] April 5, 2006 State Application.

[20] 2006 CWA 303(d) List.

[21] Royal Caribbean Press Release—Fast Facts *Oasis of the Seas/Allure of the Seas-http://www.oasisoftheseas.com/press-materials.php.*

greater, regardless of sewage holding capacity, be subject to the proposed rule. As mandated by SB 771, in 2006 the California State Lands Commission conducted a survey (2006 Vessel Survey) of large passenger and large oceangoing vessels calling on California ports in order to better understand vessel sewage generation and discharges.[22] Based on the 33 large passenger vessels reporting, an average sized passenger vessel holds nearly 2,900 passengers and crew (2,154 and 709 respectively). At a daily per person sewage generation rate of 8.4 gallons, an average sized large passenger vessel is capable of generating as much as 24,360 gallons of sewage per day.[23]

In 2008, 48 large passenger vessels made 788 calls to California ports and spent an average of one day in port per arrival.[24] As illustrated in Table 3, at an estimated 24,360 gallons per day and an average stay of one day, these vessels could potentially generate 19.2 million gallons of treated sewage annually while in State marine waters. EPA has no way of verifying how much treated large passenger vessel sewage is actually discharged in State marine waters; this depends on actual numbers of passengers and crew and how much treated sewage is discharged to treatment facilities on land and/or held for discharge outside State waters. However, it is likely that a significant portion of this estimated 19.2 million gallons is in fact currently being discharged in State waters. The intent of this proposed rule is to prohibit all sewage generated from large passenger vessels from entering State marine waters.

TABLE 3—CALIFORNIA LARGE PASSENGER VESSEL (LPV) DATA FOR 2008

| LPVs* | Passengers & crew** | Port calls* | Average port days** | Estimated sewage generation (g/day)*** | Estimated treated vessel sewage generated while in State waters (g/year)*** |
|---|---|---|---|---|---|
| 48 | 2,900 | 788 | 1 | 24,360 | 19,195,680 |

* State's January 27, 2009 Application Addendum.
** State Lands Commission 2006 Vessel Survey Data.
*** EPA calculations.

Treated sewage discharges from vessels generally contain higher concentrations of pollutants than discharges of treated sewage from land-based wastewater treatment plants and can cause or contribute to water quality impairments and impacts to highly sensitive marine habitats. This can be attributed to lower dilution rates for large passenger vessel sewage discharges, especially in cases where these vessels employ vacuum flushing and conveyance to reduce water use.

Based on data collected in 2000 for the Alaska Cruise Ship Initiative (21 vessels), the average fecal coliform concentrations in traditional Type II MSD effluent was 2.04 million MPN (most probable number)/100 mL.[25] As shown in Table 4, of the 92 samples collected, 51 exceeded EPA's performance standard for Type II effluent fecal coliform count of 200 MPN/100 ml. Of the 92 samples collected, 35 exceeded 100,000 MPN/100 mL and 22 exceeded 1 million MPN/100 mL. The range of fecal coliform concentrations ranged between <2 MPN/100 mL and 24 million MPN/100 mL. Based on these results, the average concentration was as much as 20 times greater than un-treated municipal wastewater (ranges from 10,000 to 100,000 MPN/100 mL)[26] and over 10,000 times greater than the Federal MSD fecal coliform standard of <200 MPN/100 mL.

EPA's 2008 Cruise Ship Discharge Assessment Report found that Type II MSD effluent concentrations of fecal coliform also could lead to exceedences of EPA's 2006 National Recommended Water Quality Criteria (NRWQC) established for shellfish harvesting waters. This bacteria standard States that median fecal coliform concentrations should not exceed 14 MPN/100 mL, with not more than 10 percent of samples exceeding 43 MPN/100 mL. EPA notes that these are ambient water quality criteria not discharge standards, and that depending on the amount of mixing, discharges exceeding the numeric level of the criterion at the point of discharge would not necessarily lead to an exceedence of the NRWQC. However, given the levels of fecal coliform in some of the samples discussed above, sewage discharges from cruise ships could be causing or contributing to violations of these NRWQC as well as State water quality criteria. For example, California has adopted the NRWQC for fecal coliform for shellfish in some coastal waters and for all coastal waters has adopted criteria for contact recreation not to exceed 200 MPN/100 mL with not more than 10 percent of samples exceeding 400 MPN/100 mL.

For suspended solids, values detected in effluent from Type II MSDs were substantially higher than levels that would generally be considered to comply with narrative NRWQC land-based discharge standards. Data for residual chlorine concentrations from Type II MSDs and advanced wastewater treatment systems (AWTs) also exceeded levels that would violate NWRQC standards if found in the ambient water. Site-specific evaluations would be needed to determine whether these vessel discharges would cause, have the potential to cause, or contribute to non-attainment of water quality standards.[27]

[22] California State Lands Commission 2006 Vessel Survey data was dictated under SB 771.

[23] California State Lands Commission 2006 Vessel Survey reported 33 large passenger vessels making port calls in California with an average 709 crew and 2,154 passengers for an average of 2,864 people on board.

[24] Number and frequency of port calls for large passenger vessels based on the January 27, 2009 State Application Addendum.

[25] 2000 Alaska Cruise Ship Initiative, reported in 2008 EPA Cruise Ship Discharge Assessment Report. Two of the 21 vessels sampled were using reverse osmosis treatment systems.

[26] 2003 Metcalf & Eddy Wastewater Engineering.

[27] 2000 Alaska Cruise Ship Initiative, reported in 2008 EPA Cruise Ship Discharge Assessment Report.

TABLE 4—FECAL COLIFORM CONCENTRATIONS IN LARGE PASSENGER VESSEL EFFLUENT*

| Number of samples | Federal type II MSD standard (MPN/100 ml) | Samples >200 MPN/100 ml | Samples >100,000 MPN/100 ml | Samples >1,000,000 MPN/100 ml |
|---|---|---|---|---|
| 92 | <200 | 51 | 35 | 22 |

* 2000 Alaska Cruise Ship Initiative, reported in 2008 EPA Cruise Ship Discharge Assessment Report.

Some large passenger vessels, especially those traveling to Alaska, have installed AWTs that provide sewage treatment effectiveness greater than Type I and II MSDs; however, the extent to which vessels operating in California waters operate AWTs is unknown. In 2006, 23 of 28 large passenger vessels that operated in Alaskan waters had AWTs to treat both sewage and graywater in order to meet the more stringent discharge requirements in effect there. Analyses of sampling results from 2003–2005 indicate that AWTs are very effective in removing pathogens, oxygen demanding substances, suspended solids, oil and grease, and particulate metals.[28] AWTs can remove some of the dissolved metals, and can remove most volatile and semi-volatile organics to levels below detection limits but achieve moderate nutrient removals and do not remove all contaminants. According to EPA study results of a representative vessel, toxic pollutants such as ammonia, copper, nickel, selenium, and zinc were still discharged at concentrations above their toxicity criteria.[29] Again, site specific evaluations would be needed to determine whether these vessel discharges would cause, have the potential to cause, or contribute to non-attainment of water quality standards.

This proposed rule would address anticipated increases in large passenger vessel sewage discharges as the industry grows in future years. In 2007, nearly 1.5 million passengers departed from California ports making the State the second largest cruise market in the nation.[30] This is significant considering North America accounted for more than 75 percent of the overall global cruise market in 2009. According to the Cruise Lines International Association (CLIA), 14 new passenger vessels were introduced globally in 2009, 12 will be introduced in 2010, with a total of 23 on order between 2010 and 2012.[31] Large passenger vessel traffic is increasing as average annual growth of the global cruise industry has continued at almost eight percent since 1980. At this rate, the number of cruise ship passengers is expected to triple to 15 million by 2020, while the current number of cruise ships globally is projected to double by 2020,[32] which will significantly increase the number of vessel trips in California marine waters.

*Vessel Sewage Generated from Large Oceangoing Vessels with two days or more sewage holding capacity:* Table 5 provides data used to determine sewage discharges from large oceangoing vessels with two days or more sewage holding capacity. Based on 2006 Vessel Survey data, approximately 35 percent of the 1,384 vessels reporting had two days or more of sewage holding capacity.[33] This represents the approximate percentage of large oceangoing vessels that would likely be subject to the proposed rule. According to the State's application, in 2008, 1,753 large oceangoing vessels made 9,620 port calls to California. Based on the 2006 survey, 35 percent of those port calls (3,367 port calls) would have been made by vessels that are subject to the proposed rule.[34, 35] Larger oceangoing vessels typically carry 15 to 25 crew members. The average, based on the 2006 Vessel Survey, was 21 crew members. The average port stay was two days. At an average rate of 8.4 g/person/day, an oceangoing vessel with an average sized crew would generate approximately 176 gallons of sewage per day. EPA multiplied the 176 g/day average sewage generation rate, with the estimated 3,367 annual port calls, and the average two-day port visit, to estimate that large oceangoing vessels calling on California ports generate almost 1.2 million gallons of sewage per year. As with large passenger vessels, EPA does not have data for determining how much of this sewage is discharged in State marine waters, however it is likely to be a significant portion. Unlike large passenger vessels, EPA does not have treated sewage sampling data for large oceangoing vessels, but lacking any data that would demonstrate otherwise, we assume that sewage from large oceangoing vessels has similar pollutant concentrations as large passenger vessels. The intent of the proposed rule is to prohibit all treated sewage from large oceangoing vessels with adequate holding capacity from being discharged to State marine waters.

TABLE 5—CALIFORNIA OCEANGOING VESSEL (LOV) DATA FOR 2008

| LOVs* | Port calls* | Port calls by LOVs with sufficient holding tank capacity*** | Crew** | Average port days** | Sewage (g/day)*** | Sewage Generated while in State waters (g/year)*** |
|---|---|---|---|---|---|---|
| 1,753 | 9,620 | 3,367 | 21 | 2 | 176 | 1,185,184 |

* State's January 27, 2009 Application Addendum.
** State Lands Commission 2006 Vessel Survey Data.

[28] Sampling results used include EPA sampled wastewater from cruise ships in 2004 and 2005, cruise ship compliance monitoring data for AWT effluent provided by the Alaska Department of Environmental Conservation and the Coast Guard for 2003–2005, and self-monitoring data for AWT effluent submitted by the cruise industry in response to EPA's 2004 cruise ship survey.

[29] March 2006, EPA Sampling Episode Report Princess Cruise Lines—Island Princess, Sampling Episode 6505.

[30] July 8, 2009 letter from Congress to Administrator Jackson.

[31] CLIA Forecasts Continued Growth in Cruise Industry, January 12, 2010. *http://www.travelpulse.com/Resources/Editorial.aspx?n=66206.*

[32] GlobalSecurity.org: *http://www.globalsecurity.org/military/systems/ship/passenger-cruise.htm.*

[33] According to the California State Lands Commission 2006 Vessel Survey, 35 percent of vessels had sewage capacity of two days or more. This was extrapolated to estimate sewage capacity of vessels calling in 2008 as reported in the State's January 27, 2009 Application Addendum.

[34] California State Lands Commission 2006 Vessel Survey.

[35] January 27, 2009 State Application Addendum.

*** EPA calculations.

Oceangoing vessel traffic is projected to increase significantly in California marine waters. San Pedro Bay Ports in Los Angeles and Long Beach comprise the highest volume port complex in the nation and project a 44 percent increase in the volume of container throughput between 2010 and 2020.[36] Vessel container capacity will increase with larger ships, but port calls are still projected to increase from nearly 3,600 in 2007 to as many as 5,600 in 2020.[37] The Port of Oakland, the second highest volume port in the State and fourth in the nation, hosted nearly 2,000 container ship calls in 2008 and is forecast to increase cargo throughput approximately 5 percent each year between now and 2017.[38] This increase in vessel traffic will result in increased generation of treated vessel sewage that could potentially be discharged to State marine waters.

*Vessels Not Covered by the NDZ:* As described in Section IV of this proposed rule, the State's application requested that the discharge prohibitions be limited to a certain class of vessels. Vessels not covered by the proposed rule include oceangoing vessels with less than two days of sewage holding capacity, and vessels less than 300 gross tons. Based on the State's 2006 Vessel Survey data and the number of vessels calling to California ports in 2008, approximately 65 percent (1,139) of the oceangoing vessels had less than two days of holding capacity and would not be subject to the rule as proposed.[39] Multiplying the estimated 176 g/day average sewage generation rate, with the estimated 6,253 annual port calls, and the average two-day port visit, EPA estimates that large oceangoing vessels without adequate holding capacity generate approximately 2.2 million gallons of sewage per year. The EPA and the State are aware that smaller vessels, including recreational and smaller commercial vessels, also discharge sewage to the State's coastal water. In deciding to request designation of an NDZ applicable only to larger vessels as specified above, but applicable to the entire California coast, the State legislature determined that prohibiting discharge from the largest vessels would provide a relatively efficient approach to reducing the vessel sewage waste stream along the entire coast because these vessels generate a significant amount of sewage compared to smaller vessels. Vessels equipped with installed toilets are currently prohibited from discharging untreated sewage in any navigable waters within 3 miles from shore. Based on State estimates for 2006, approximately 80 percent of the 841,000 recreational vessels in California did not have Type I (flow through treatment device for vessels 65 feet or less) or Type II MSDs and therefore would be prohibited from discharging sewage to State marine waters.[40] The remaining 20 percent (168,200) can discharge treated sewage from their MSDs to State waters. Applying the State's data for small vessel usage, two persons per vessel, an average of one full "recreation day" (four 6-hour trips per year), and an 8.4 gallons of sewage per person per day, the total amount of treated sewage potentially discharged from recreational vessels to State marine waters in one year could amount to approximately 2.8 million gallons, if all discharges were within State waters.[41]

In addition to current MSD requirements, the ten NDZs previously approved along the California coast address small vessel pollution in high density recreational boating areas.[42] Instead of seeking an NDZ applicable to all vessels, the State legislation enacted companion provisions designed to improve sewage pump out capacity and utilization rates for vessel pump out facilities by recreational and small commercial vessels as alternative approaches to reducing sewage discharges from smaller vessels.

## VI. Effect on Current Vessel Sewage Controls

Today's proposed rule does not alter existing vessel sewage discharge prohibitions in California waters. All existing NDZs in California remain in effect for all vessels operating in those waters.

The proposed rule complements the discharge prohibitions recently passed by NOAA for all four of California's NMSs. Those discharge prohibitions were adopted pursuant to California's application to NOAA and became effective March 9, 2009 for the Gulf of the Farallones, Monterey Bay, and Cordell Bank National Marine Sanctuaries (74 FR 12088 (Mar. 23, 2009)) and March 19, 2009 for the Channel Islands National Marine Sanctuary (74 FR 12087 (Mar. 23, 2009)). The new Sanctuary management plans prohibit "discharges/deposits of treated and untreated sewage from vessels 300 gross registered tons or more, except oceangoing ships without sufficient holding tank capacity to hold sewage and graywater, respectively, while within the Sanctuary. Large passenger vessels are not provided an exception and, therefore, are prohibited from discharging/depositing treated or untreated sewage and graywater in the Sanctuary." *See Gulf of the Farallones National Marine Sanctuary Regulations; Monterey Bay National Marine Sanctuary Regulations; and Cordell Bank National Marine Sanctuary Regulations; Final Rule,* 73 FR 70488 (Nov. 20, 2008) and *Channel Islands National Marine Sanctuary Regulations; Final Rule,* 74 FR 3216 (Jan. 16, 2009). Like the Sanctuary prohibitions, today's proposed rule would not require oceangoing vessels without sufficient holding tank capacity, as defined, to hold treated vessel sewage while within State marine waters.

The four California National Marine Sanctuaries cover over 33 percent of all California marine waters (nearly 38 percent with proposed Cordell bank and Gulf of the Farallones expansions). This proposal would cover all California waters. The discharge prohibitions in California's National Marine Sanctuaries cover a total of 1,726 square miles of ocean (and would be expanded by almost 232 square miles with the proposed expansions) in addition to nearly 30 square miles of existing NDZs. In total, sewage discharges are currently prohibited within 1,755 square miles of the 5,222 square miles of California marine waters. Today's prohibition would apply to the entire 5,222 square miles.

*Other Existing Vessel Pollutant Controls:* Following several confirmed sewage discharge violations, the Cruise Lines International Association (CLIA), representing the 25 major cruise lines serving North America, adopted voluntary industry standards to address cruise industry waste management. Under the CLIA 2006 "Cruise Industry Waste Management Practices and Procedures", Association members have agreed to comply with requirements to process all sewage through an MSD certified in accordance with U.S. or international regulations prior to discharge. For ships that do not have

[36] San Pedro Bay Ports Long-Term Cargo Forecast, Mercer Management Consulting, 2001.

[37] Container Vessel Forecast for San Pedro Bay Ports, Mercator Transport Group, 2000.

[38] Port of Oakland Website: *http://www.portofoakland.com.*

[39] California State Lands Commission 2006 Vessel Survey.

[40] January 27, 2009 State Application Addendum.

[41] January 27, 2009 State Application Addendum.

[42] USEPA No Discharge Zones for Vessel Sewage: *HTTP://www.epa.gov/region09/water/no-discharge/index.html.*

AWTs traveling regularly on itineraries beyond territorial coastal waters, (CLIA) standards provide that discharge will take place only when the ship is more than four miles from shore and when the ship is traveling at a speed of not less than six knots (for vessels operating under sail, or a combination of sail and motor propulsion, the speed shall not be less than four knots). For vessels whose itineraries are fully within U.S. territorial waters, CLIA standards provide that discharge shall comply fully with U.S. and individual State legislation and regulations.

To EPA's knowledge, CLIA voluntary measures are not monitored or reported and the degree of compliance with these voluntary measures is unknown. The State of California states that existing MSD requirements and voluntary discharge limitations are not fully effective.[43] While the number of vessels actually discharging partially or untreated sewage in State marine waters can only be estimated, the Government Accountability Office 2000 report to Congress[44] and the State confirm discharges of untreated sewage from large passenger vessels and other oceangoing vessels in State marine waters.

A majority of large oceangoing vessels operating in U.S. waters are registered in foreign countries and subject to the "International Convention for the Prevention of Pollution from Ships, 1973 as modified by the Protocol of 1978 relating thereto" ("MARPOL"). The principal international instrument regulating discharges of sewage from vessels is Annex IV to MARPOL. While the United States is not a Party to MARPOL Annex IV, and thus is not bound by its provisions, a vessel flying the flag of a country who is a Party to Annex IV remains subject to the Annex's requirements (as implemented and enforced by the flag State) no matter where the vessel sails, including when the vessel is operating in U.S. waters.

Annex IV applies to subject vessels engaged in international voyages of 400 gross tonnage and above, and to subject vessels of less than 400 gross tonnage which are certified to carry more than 15 persons (passengers and crew). The Annex contains, among other requirements, limits on the discharge of sewage into the sea, and provisions for the survey and certification of a vessel's sewage treatment device. In particular, Annex IV prohibits the discharge of sewage into the sea except when:

The vessel is discharging comminuted and disinfected sewage from an approved system at a distance of more than three miles (nm) from the nearest land; or

The vessel is discharging sewage which is not comminuted or disinfected (*i.e.,* untreated sewage), at a distance of more than 12 nm from the nearest land, provided that sewage that has been stored in holding tanks, or sewage originating from spaces containing living animals, is not discharged instantaneously but at a moderate rate when the ship is *en route* and proceeding at a speed of at least four knots; or

The vessel is using a type-approved sewage treatment plant (STP) that has been certified to meet the applicable International Maritime Organization's recommendations and regulations, the test results are laid down in the ship's International Sewage Pollution Prevention Certificate, and the effluent does not produce visible floating solids or cause discoloration of the surrounding water.

## VII. Conclusion

EPA has reviewed the State's application for the establishment of an NDZ, and other information summarized above, and has determined that an NDZ is required to protect and enhance the quality of these waters. As shown in Table 6, by prohibiting large passenger vessels and large oceangoing vessels with two days or more of sewage holding tank capacity from discharging sewage in State marine waters, a significant pollutant waste stream of up to 20.4 million gallons of treated sewage per year would be prohibited from waters that support a variety of unique, nationally important and biologically significant environments that contribute to California's recreational, economic, and aesthetic values. As a result, improved water quality would likely benefit human health by reducing pollutant exposure from recreation and provide benefits to wildlife and their habitats, commercial fisheries and shell bed operations, and water intakes for desalination plants.

TABLE 6—CALIFORNIA VESSEL SEWAGE CONTRIBUTIONS AND NDZ PROHIBITIONS

| Sewage Source | Treated vessel sewage generation in State waters (gallons/year) | Treated vessel sewage prohibited by this proposed NDZ (gallons/year) |
|---|---|---|
| Large Passenger Vessels | 19.2 million | 19.2 million. |
| Large Oceangoing Vessels (with two days or more sewage holding capacity) | 1.2 million | 1.2 million. |
| Combined Large Passenger and Large Oceangoing Vessels | 20.4 million | 20.4 million. |
| Not addressed by this rule | | |
| Large Oceangoing Vessels without holding capacity | 2.2 million | No Change. |
| Recreational Vessels | 2.8 million | No Change. |
| Combined Large Oceangoing Vessels without holding capacity and Recreational Vessels[45]. | 5 million | No Change. |

[45] The proposed rule would not apply to non-recreational oceangoing vessels less than 300 gross tons in size. Insufficient data were available to estimate sewage generation from these smaller oceangoing vessels. Based on a review of available data describing the sizes of oceangoing vessels operating in US ports, it appears very few oceangoing vessels are less than 300 gross tons in size (*see*, e.g., Commercial Marine Activity for Deep Sea Ports in the United States, EPA420–R–99–020, September, 1999). Therefore, we do not expect that sewage discharges from oceangoing vessels less than 300 gross tons are significant in comparison with other types of oceangoing vessels.

Section 312(f)(4)(A) states "If the EPA Administrator determines upon application by a State that the protection and enhancement of the quality of specified waters within such State requires such a prohibition, he

[43] April 5, 2006 State Application.

[44] Marine Pollution, Progress Made to Reduce Marine Pollution by Cruise Ships but Important Issues Remain, GAO 2000.

shall, by regulation completely prohibit the discharge from a vessel of any sewage (whether treated or not) into such waters." This authority has been delegated to EPA Regional Administrators. On April 5, 2006, the California State Water Resources Control Board, pursuant to State statutory mandates, requested that EPA Region 9 establish an NDZ for all State waters along the California coast that applies to large passenger vessels of 300 gross tons or more, and oceangoing vessels of 300 gross tons or more that have two days or more of sewage holding capacity. For the reasons discussed above, the EPA Region 9 Administrator finds that the protection and enhancement of the quality of California's marine waters requires the requested NDZ.

## VIII. Public Comment

EPA invites public comment on all aspects of the proposed rule and will accept all comments for the next 60 days. Particular parts of the rule may benefit from attention and comment from reviewers with expertise and knowledge and opinions on the following subjects: EPA's conclusion that the protection and enhancement of California State marine waters require the requested prohibition on sewage discharges; EPA's prohibition of sewage discharges from specific classes of vessels; EPA's use of a two-day sewage holding capacity, and the generation rate of 8.4 gallons per day per person, as the basis for applying the proposed rule to large oceangoing vessels; the definitions used in the proposed rule, including the definition of "large oceangoing vessel" to include private, commercial, government or military vessels of 300 gross tons or more; EPA's economic analysis for vessel retrofit and operational costs; and whether vessels subject to the proposed rule are owned by companies that are "small entities" under the Regulatory Flexibility Act.

## IX. Statutory and Executive Order Reviews

### *A. Executive Order 12866: Regulatory Planning and Review*

Under Executive Order 12866 (58 FR 51735, Oct. 4, 1993), this action is a "significant regulatory action." Accordingly, EPA submitted this action to the Office of Management and Budget (OMB) for review under EO 12866 and any changes made in response to OMB recommendations have been documented in the docket for this action.

In addition, EPA prepared an analysis, summarized in Table 7, of the potential costs associated with this action to determine whether the rule would have an annual effect on the economy of $100 million or more, or adversely affect in a material way the economy or a sector of the economy.

Vessels that are equipped with MSDs and that navigate throughout California State Waters are already subject to the EPA MSD Standard at 40 CFR part 140 and the U.S. Coast Guard MSD Standard at 33 CFR part 159. These standards prohibit the overboard discharge of untreated vessel sewage in State waters and require that vessels with installed toilets be equipped with U.S. Coast Guard certified MSDs which either retain sewage or treat sewage to the applicable standards. There are three types of MSDs, but only Type II and Type III MSDs apply to vessels affected by this rule.

Vessels subject to this rule include large passenger vessels of 300 gross tons or more and oceangoing vessels of 300 gross tons or more with two days or more sewage holding capacity. According to the State's 2006 Vessel Survey data, approximately 35 percent of oceangoing vessels that made port calls in California had holding capacity for at least two days and, therefore, would be subject to the proposed rule. Based on an average two-day port call, EPA does not anticipate oceangoing vessels subject to the proposed rule would be required to employ operational or structural changes, such as making special trips beyond State marine waters to discharge, or increasing their holding capacity. If vessels subject to the proposed rule were to stay in State marine waters for a period of time beyond their sewage holding capacity operators may choose to make additional trips to discharge beyond State waters, and/or vessel owners may decide to retrofit their current holding tank capacities in order to comply with the rule.

Although the proposed rule would not require vessel owners to retrofit any oceangoing vessels, EPA evaluated the potential costs of retrofitting holding tanks to increase capacity. Based on an industry estimate obtained by the EPA, the cost of holding tank retrofits could be approximately $100,000 each but would vary from vessel to vessel.[46] EPA was unable to estimate an annual cost of retrofits for oceangoing vessels subject to the proposed rule. Data was not available for determining how many oceangoing vessel owners with vessels subject to the proposed rule might choose to implement retrofits.

According to responses to EPA's 2004 cruise ship survey, large passenger vessels operating in Alaska had an average of 62 hours of sewage holding capacity greatly exceeding average port stays of one day[47] However, according to the State's 2006 Vessel Survey 40 percent of the large passenger vessels had less than one day holding capacity. As a result, some large passenger vessels may need to install sewage holding capacity retrofits to avoid discharging sewage in State marine waters. Based on 2008 vessel calls, if 40 percent, or 48, large passenger vessels chose to retrofit their vessels at a cost of $200,000 per vessel, the resulting cost would be approximately $3.8 million.

As an alternative to expanding holding capacity, vessels that would be regulated by the proposed rule may choose to comply by traveling outside of State marine waters to discharge sewage. For large passenger vessels, EPA estimates the cost of each trip would be approximately $2,000. This estimate assumes the use of 800 gallons of diesel fuel at $2.50 per gallon to travel beyond 3 miles, discharge, and return to port at a cruising speed of 25 knots.[48] Based on the 2008 data, if all 788 port calls required extra trips to discharge sewage outside State marine waters, the total fuel cost would be approximately $1.6 million per year. This is likely a conservative estimate considering there are volunteer vessel speed reduction programs in place and under development along the California coast that provide incentives to vessel operators to reduce speeds within 20 nautical miles of the coast to reduce air pollutant emissions.[49] Lower speeds could reduce fuel consumption costs by as much as 30 percent.[50]

Vessels calling at ports within the San Francisco Bay, and Suisun Bay further inland, would have to travel beyond 3 miles to discharge beyond the NDZ limit. At most, a small percentage of oceangoing vessels calling at the Shell

[46] Estimate from third party industry group, 11/3/2009.

[47] 2008 EPA Cruise Ship Discharge Assessment Report.

[48] Cunard Queen Elizabeth 2 Technical Information estimated fuel consumption rate of 49.5 feet per gallon: *http://www.cunard.com/uploads/QE2_Tech.pdf.*

[49] Ports of Los Angeles and Long Beach Vessel Speed Reduction Program: *http://www.portoflosangeles.org/environment/ogv.asp.*

Port of San Diego Voluntary Vessel Speed Reduction Program Showing Signs of Success: *http://www.portofsandiego.org/environment/1728-voluntary-vessel-speed-reduction-program-showing-signs-of-success.html.*

[50] New York Times, February 16, 2010, *Slow Trip Across Sea Aids Profit and Environment: http://www.nytimes.com/2010/02/17/business/energy-environment/17speed.html.*

Oil Terminal of Martinez and Port of Benicia would need to travel approximately 45 miles each way to go beyond the 3 mile NDZ limit and back. Vessels calling at the Ports of Oakland and Richmond would travel approximately 18 miles each way and for the Port of San Francisco, 9 miles each way. Greater travel distances to discharge beyond the NDZ limit could incur increased costs for this small percentage of vessels.

EPA was unable to estimate an annual cost of special trips for oceangoing vessels to discharge beyond State marine waters. Data was not available for determining how many oceangoing vessel owners with vessels subject to the proposed rule might choose to implement these operational changes.

TABLE 7—POTENTIAL INDUSTRY COSTS FROM THE PROPOSED RULE

| | Expansion of holding tank** | Discharging outside of State marine waters *** |
|---|---|---|
| Large Oceangoing Vessels (with two days or more sewage holding capacity)* | $100,000/vessel | $2,000/trip. |
| Large Passenger Vessels | $3.8 million | $1.6 million. |

* Oceangoing vessels subject to proposed rule that would make operational or structural changes could not be determined.
** One-time cost estimate.
*** Annual cost estimates.

*B. Paperwork Reduction Act*

This action does not impose an information collection burden under the provisions of the *Paperwork Reduction Act,* 44 U.S.C. 3501 *et seq.* Burden is defined at 5 CFR 1320.3(b). Since today's rule would not establish or modify any information and record keeping requirements, it is not subject to the requirements of the Paperwork Reduction Act.

*C. Regulatory Flexibility Act*

The Regulatory Flexibility Act (RFA) generally requires an agency to prepare a regulatory flexibility analysis of any rule subject to notice and comment rulemaking requirements under the Administrative Procedure Act or any other statute unless the agency certifies that the rule will not have a significant economic impact on a substantial number of small entities. Small entities include small businesses, small organizations, and small governmental jurisdictions.

For purposes of assessing the impacts of today's rule on small entities, small entity is defined as: (1) A small business as defined by the Small Business Administration's (SBA) regulations at 13 CFR 121.201; (2) a small governmental jurisdiction that is a government of a city, county, town, school district or special district with a population of less than 50,000; and (3) a small organization that is any not-for-profit enterprise which is independently owned and operated and is not dominant in its field.

After considering the economic impacts of this proposed regulation/rule on small entities, EPA certifies that this action will not have a significant economic impact on a substantial number of small entities. The small entities subject to the requirements of this proposed rule fall under Deep Sea Freight Transportation (NAICS Code 483111) and Deep Sea Passenger Transportation (NAICS 483112) classifications.[51] The US Small Business Administration size standard for these businesses is 500 or fewer employees. To determine the size of companies that own large passenger and large oceangoing vessels that call at California ports, the EPA reviewed owner profiles for all large passenger vessels and several oceangoing vessels that responded to the 2006 vessel survey. Based on this review, it was determined that no large passenger and oceangoing vessels that call at California ports are owned by companies that employ 500 or fewer people.

We continue to be interested in the potential impacts of the proposed rule on small entities and welcome comments on issues related to such impacts.

*D. Unfunded Mandates Reform Act*

This rule does not contain a Federal mandate that may result in expenditures of $100 million or more for State, local, and tribal governments, in the aggregate, or the private sector in any one year, as demonstrated above in section A, Executive Order 12866: Regulatory Planning and Review.

Because the rule contains no regulatory requirements that might significantly or uniquely affect small governments, it is also not subject to the requirements of section 203 of the Act. Small governments are subject to the same requirements as other entities whose duties result from this rule and they have the same ability as other entities to retain and pump out treated sewage or discharge outside of the designated zones.

*E. Executive Order 13132: Federalism*

This action does not have Federalism implications. It will not have substantial direct effects on the States, on the relationship between the national government and the States, or on the distribution of power and responsibilities among the various levels of government, as specified in Executive Order 13132. Section 312(f) of the CWA generally preempts State regulation of sewage discharges in State waters. An NDZ allows the State to seek protection of its State waters that it would otherwise be preempted from providing on its own. The State of California is requesting that EPA take action to designate all State waters as an NDZ under CWA § 312(f)(4)(A). Therefore, Executive Order 13132 does not apply to this action.

In the spirit of Executive Order 13132, and consistent with EPA policy to promote communications between EPA and State and local governments, EPA specifically solicits comment on this proposed action from State and local officials.

*F. Executive Order 13175: Consultation and Coordination With Indian Tribal Governments*

This action does not have any known tribal implications, as specified in Executive Order 13175 (65 FR 67249, Nov. 9, 2000). The only expected impact on tribal rights or responsibilities is the improvement of ocean water quality. EPA has notified all California tribes with coastal reservations of this proposed action. EPA will consider any comments on this proposed action from tribal officials.

[51] U.S. Small Business Administration Table of Small Business Size Standards, North American Industry Classification System (NAICS)), *http://www.sba.gov/size*).

*G. Executive Order 13045: Protection of Children From Environmental Health Risks & Safety Risks*

The order applies to economically significant rules under *E.O. 12866* that concern an environmental health or safety risk that EPA has reason to believe may disproportionately affect children. This action is not subject to EO 13045 (62 FR 19885, April 23, 1997) because it is not economically significant as defined in EO 12866.

*H. Executive Order 13211: Actions That Significantly Affect Energy Supply, Distribution, or Use*

This action is not a "significant energy action" as defined in Executive Order 13211 (66 FR 28355, May 22, 2001), because it is not likely to have a significant adverse effect on the supply, distribution, or use of energy.

*I. National Technology Transfer and Advancement Act*

Section 12(d) of the National Technology Transfer and Advancement Act of 1995 (NTTAA), Public Law 104–113, 12(d) (15 U.S.C. 272 note) directs EPA to use voluntary consensus standards in its regulatory activities unless to do so would be inconsistent with applicable law or otherwise impractical. Voluntary consensus standards are technical standards (*e.g.,* materials specifications, test methods, sampling procedures, and business practices) that are developed or adopted by voluntary consensus standards bodies. NTTAA directs EPA to provide Congress, through OMB, explanations when the Agency decides not to use available and applicable voluntary consensus standards.

This proposed rulemaking does not involve technical standards. Therefore, EPA is not considering the use of any voluntary consensus standards.

*J. Executive Order 12898: Federal Actions To Address Environmental Justice in Minority Populations and Low-Income Populations*

Executive Order 12898 (59 FR 7629 (Feb. 16, 1994)) establishes Federal executive policy on environmental justice. Its main provision directs Federal agencies, to the greatest extent practicable and permitted by law, to make environmental justice part of their mission by identifying and addressing, as appropriate, disproportionately high and adverse human health or environmental effects of their programs, policies, and activities on minority populations and low-income populations in the United States.

EPA has determined that this proposed rule will not have disproportionately high and adverse human health or environmental effects on minority or low-income populations because it increases the level of environmental protection for all affected populations without having any disproportionately high and adverse human health or environmental effects on any population, including any minority or low-income population. The proposed rule would further regulate and reduce pollutants from sewage in California marine waters thus reducing the risk of exposure to all populations, including those covered under this Executive order.

**Lists of Subjects in 40 CFR Part 140**

Environmental protection, Sewage disposal, Vessels.

Dated: August 25, 2010.

**Jared Blumenfeld,**

*Regional Administrator, Region IX.*

In consideration of the foregoing, EPA is proposed to be amend part 140, chapter 1 of title 40 of the Code of Federal Regulations as follows:

## PART 140—[AMENDED]

1. The authority citation for part 140 continues to read as follows:

**Authority:** 33 U.S.C. 1322.

2. Section 140.4 is amended by adding paragraph (b)(2)to read as follows:

**§ 140.4 Complete prohibition.**

* * * * *

(b) * * *

(2)(i) For the marine waters, of the State of California, including the territorial sea measured from the baseline as determined in accordance with the Convention on the Territorial Sea and the Contiguous Zone and extending seaward a distance of three miles, and also including all enclosed bays and estuaries subject to tidal influences from the Oregon border (41.999325 North Latitude, 124.212110 West Longitude, decimal degrees, NAD 1983) to the Mexican border (32.471231 North Latitude, 117.137814 West Longitude, decimal degrees, NAD 1983), the discharge of sewage (whether treated or not) from large passenger vessels and from large oceangoing vessels that have two days or more holding capacity is completely prohibited pursuant to CWA section 312(f)(4)(A). A map illustrating these waters can be obtained from EPA or viewed at *http://www.epa.gov/region9/water/no-discharge/overview.html.*

(ii) For purposes of paragraph (b)(2) of this section:

(A) A "large passenger vessel" means a passenger vessel, as defined in section 2101(22) of title 46, United States Code, of 300 gross tons or more, that has berths or overnight accommodations for passengers.

(B) A "large oceangoing vessel" means a private, commercial, government, or military vessel of 300 gross tons or more.

(C) Two days of holding capacity is the ability to hold in a holding tank of suitable design, construction and purpose, as determined by the vessel's flag Administration, at least two days of sewage per the vessel's crew capacity at a generation rate of 8.4 gallons per day per person.

(D) Oceangoing vessel crew capacity is determined by: a certificate of inspection issued by the US Coast Guard for US flagged vessels; or a MARPOL Annex 4 certificate issued by the signatory State for foreign flagged vessels. For either certificate, the maximum number of passengers and crew is identified for the vessel.

* * * * *

[FR Doc. 2010–21950 Filed 9–1–10; 8:45 am]

BILLING CODE 6560–50–P

## DEPARTMENT OF COMMERCE

### National Oceanic and Atmospheric Administration

### 50 CFR Part 223

**[Docket No. 0808071080–91228–01]**

**RIN 0648–AW93**

### Sea Turtle Conservation; Shrimp and Summer Flounder Trawling Requirements

**AGENCY:** National Marine Fisheries Service (NMFS), National Oceanic and Atmospheric Administration (NOAA), Commerce.

**ACTION:** Proposed rule; request for comments.

**SUMMARY:** NMFS proposes to revise the turtle excluder device (TED) requirements to allow the use of new materials and modifications to existing approved TED designs. Specifically, proposed allowable modifications include the use of flat bar, rectangular pipe, and oval pipe as construction materials in currently-approved TED grids; an increase in maximum mesh size on escape flaps from 1⅝ to 2 inches (4.1 to 5.1 cm); the inclusion of the Boone Big Boy TED for use in the shrimp fishery; the use of three large TED and Boone Wedge Cut escape openings; and the use of the Chauvin

shrimp deflector to improve shrimp retention. NMFS also proposes to allow a new TED for use in the summer flounder fishery. Additionally, there are proposed corrections to the TED regulations to rectify an oversight regarding the maximum size chain that can be used on the Parker TED escape opening flap, and the proposed addition of a brace bar as an allowable modification to hard TEDs.

**DATES:** Written comments (*see* **ADDRESSES**) will be accepted through October 18, 2010.

**ADDRESSES:** You may submit comments on this proposed rule, identified by 0648–AW93, by any of the following methods:

- *Electronic Submissions:* Submit all electronic public comments via the Federal e-Rulemaking Portal: *http://www.regulations.gov.*
- *Mail:* Michael Barnette, Southeast Regional Office, NMFS, 263 13th Avenue South, St. Petersburg, FL 33701.
- *Fax:* 727–824–5309; Attention: Michael Barnette.

*Instructions:* All comments received are a part of the public record and will generally be posted to *http://www.regulations.gov* without change. All Personal Identifying Information (for example, name, address, *etc.*) voluntarily submitted by the commenter may be publicly accessible. Do not submit Confidential Business Information or otherwise sensitive or protected information.

NMFS will accept anonymous comments (enter N/A in the required fields, if you wish to remain anonymous). You may submit attachments to electronic comments in Microsoft Word, Excel, WordPerfect, or Adobe PDF file formats only.

**FOR FURTHER INFORMATION CONTACT:** Michael Barnette, 727–551–5794.

**SUPPLEMENTARY INFORMATION:**

## Background

All sea turtles that occur in U.S. waters are listed as either endangered or threatened under the Endangered Species Act of 1973 (ESA). The Kemp's ridley (*Lepidochelys kempii*), leatherback (*Dermochelys coriacea*), and hawksbill (*Eretmochelys imbricata*) turtles are listed as endangered. The loggerhead (*Caretta caretta*) and green (*Chelonia mydas*) turtles are listed as threatened, except for breeding populations of green turtles in Florida and on the Pacific coast of Mexico, which are listed as endangered.

Sea turtles are incidentally taken, and some are killed, as a result of numerous activities, including fishery-related trawling activities in the Gulf of Mexico and along the Atlantic seaboard. Under the ESA and its implementing regulations, the taking of sea turtles is prohibited, with exceptions identified in 50 CFR 223.206(d), or according to the terms and conditions of a biological opinion issued under section 7 of the ESA, or according to an incidental take permit issued under section 10 of the ESA. The incidental taking of turtles during shrimp or summer flounder trawling is exempted from the taking prohibition of section 9 of the ESA if the conservation measures specified in the sea turtle conservation regulations (50 CFR 223.205) are followed. The regulations require most vessels defined as "shrimp trawlers" and "summer flounder trawlers" (50 CFR 222.102) operating in the southeastern United States (Atlantic area, Gulf area, and summer flounder sea turtle protection area, *see* 50 CFR 223.206) to have a NMFS-approved TED installed in each net that is rigged for fishing to allow sea turtles to escape. TEDs currently approved by NMFS include single-grid hard TEDs and hooped hard TEDs conforming to a generic description, the flounder TED, and one type of soft TED—the Parker soft TED (*see* 50 CFR 223.207). Most approved hard TEDs are described in the regulations (50 CFR 223.207(a)) according to generic criteria based upon certain parameters of TED design, configuration, and installation, including height and width dimensions of the TED opening through which the turtles escape.

TEDs incorporate an escape opening, usually covered by a webbing flap, which allows sea turtles to escape from trawl nets. To be approved by NMFS, a TED design must be shown to be 97 percent effective in excluding sea turtles during testing based upon NMFS-approved scientific testing protocols (50 CFR 223.207(e)(1)). NMFS-approved testing protocols established to date include the "small turtle test" (55 FR 41092, October 9, 1990) and the "wild turtle test" (52 FR 24244, June 29, 1987). Additionally, NMFS has established a leatherback model testing protocol to evaluate a candidate TED's ability to exclude adult leatherback sea turtles (66 FR 24287, May 14, 2001). Because testing with live leatherbacks is impossible, NMFS obtained the carapace measurements of 15 nesting female leatherback turtles and used these data to construct an aluminum pipe-frame model of a leatherback turtle measuring 40 inches (101.6 cm) in width, 60 inches (152.4 cm) in length, and 21 inches (53.3 cm) in height. If the leatherback model and a diver with full scuba gear are able to pass through the escape opening of a candidate TED, that escape opening is judged to be capable of excluding adult leatherback sea turtles, as well as other large adult sea turtles.

## Proposed TED Modifications

The new TED designs and modifications included in this rule were developed and tested by NMFS' gear specialists with the Southeast Fisheries Science Center's Harvesting Systems and Engineering Branch, aided by input from the commercial fishing industry. Additionally, information for a study conducted by the Gulf and South Atlantic Fisheries Foundation, Incorporated (2008) was also considered during TED development.

## Flat Bar TED

Current TED regulations require the use of specific construction materials for single-grid hard TEDs (50 CFR 223.207(a)(1)(i)). These include solid steel rod with a minimum outside diameter of ¼ inch (0.64 cm); fiberglass or aluminum rod with a minimum outside diameter of ½ inch (1.27 cm); or steel or aluminum tubing with a minimum outside diameter of ½ inch (1.27 cm) and a minimum wall thickness of ⅛ inch (0.32 cm; also known as schedule 40 tubing). These minimum material requirements were designated to insure a TED grid was strong enough to withstand the conditions typically experienced during standard fishing activities, and to insure the integrity of a TED and its ability to exclude sea turtles is not compromised. As offshore shrimp fishers became increasingly aware of the benefits of using larger sized TEDs, TEDs were built using stronger materials such as aluminum and steel pipe to prevent bending of the frame. However, some fishers noticed a decrease in shrimp catch rates with pipe TEDs when compared to TEDs made from thinner materials. Using a flume tank facility in 2005, NMFS' gear specialists measured the internal water flow patterns between an aluminum pipe TED and a TED with deflector bars constructed from aluminum flat bar. Comparisons of these measurements indicated a loss of water behind the pipe TED frame and a measurable diversion of water out of the TED escape opening. In contrast, almost no water diversion was measured with the flat bar TED. In 2005–2007, a fishery-dependent study by the Gulf and South Atlantic Fisheries Foundation, Incorporated (2008) found that the aluminum flat bar TED had statistically significant increases in shrimp catch rates when compared to an aluminum pipe TED. These studies have

demonstrated flat bar TEDs may perform better for shrimp retention than pipe TEDs, and, when properly constructed, may be stronger and less prone to bending compared to pipe TEDs.

When using a flat bar less than ⅜ inch (0.95 cm) in thickness, a brace bar constructed of aluminum or steel rod or tubing specified in 50 CFR 223.207(a)(1)(i)(A) through (C) must be added to a flat bar TED to prevent spreading of the deflector bars beyond the maximum allowable 4 inch (10 cm) spacing between the bars (50 CFR 223.207(a)(4)). The brace bar must be attached to the frame and each individual deflector bar, and may be welded directly to the aft face of the grid or may be attached with spacer bars no longer than 5 inches (12.7 cm) in length that are welded to the aft face of each deflector bar. Spacer bars attached to the deflector bars must be constructed of the same material as the deflector bars (*e.g.,* aluminum flat bar ¼ inch (0.63 cm) in thickness and 1½ inch (3.8 cm) in depth). These spacers will be squared off on one end, which will be welded to the deflector bar, while the other end will need a concave (*i.e.,* half-moon) shape to be welded to the brace bar.

A TED with deflector bars constructed from aluminum flat bar stock, ¼ inch (0.63 cm) in thickness and 1½ inch (3.8 cm) in depth, was evaluated using the small turtle test protocol (55 FR 41092) in June 2006. In a sample size of 25 turtles, the bottom-opening control TED captured 1 turtle. A turtle is considered captured if it fails to escape through the TED within 5 minutes. Based on the performance of the control TED, this meant that a candidate TED would fail the test with 2 turtle captures because of the statistical probability the candidate TED may not achieve the standard (*i.e.,* control TED performance) turtle exclusion rate of 97 percent or more. The flat bar TED was tested in a bottom-opening configuration with a double-cover flap, resulting in 1 capture out of a sample size of 25 turtles, passing the certification test under the small turtle testing protocol.

NMFS' gear specialists with the Southeast Fisheries Science Center's Harvesting Systems and Engineering Branch also determined that rectangular and oval pipe, using the same minimum size and configuration specifications as round pipe, was acceptable for use in TED construction. While not subjected to the small turtle testing protocol, based on the results of the flat bar TED and known performance of TEDs constructed of round pipe, NMFS determined there would be no discernable difference in turtle exclusion rates using similar-shaped materials, specifically rectangular and oval pipe. Additionally, as previously mentioned, the list of approved construction materials for single-grid hard TEDs (50 CFR 223.207(a)(1)(i)) is based on the material's strength and integrity to withstand conditions typically experienced during standard fishing activities. Therefore, if the minimum specifications (*i.e.,* minimum outside diameter/width of ½ inch and a minimum wall thickness of ⅛ inch) are employed when using rectangular or oval pipe, NMFS determined the resulting TED grid would be strong enough for use in the fishery.

**Allowable TED Escape Flap Mesh Size**

Current regulations specify that TED escape flap webbing may not exceed 1⅝ inch (4.1 cm) in stretched mesh length (50 CFR 223.207(d)(3). Shrimp fishers have requested that mesh sizes up to 2 inches (5.1 cm) be allowed for TED flaps. This would enable them to keep a ready stock of flap material on hand should the flaps need repair, as this size would incorporate the mesh sizes of 1¾- (4.4-) and 2-inch (5.1-cm) mesh used in the body and codends of most shrimp trawls.

The small turtle testing protocol was applied in June 2004 to both the double-cover flap and the 71-inch (180-cm) flap using 2-inch (5.1-cm), #36 twine flap webbing. Both tests were conducted using a top-opening, bent-bar TED with dimensions of 51 inches (129.5 cm) in height by 42 inches (106.7 cm) in width. In a sample size of 25 turtles, the top-opening control TED captured 2 turtles. A turtle is considered captured if it fails to escape through the TED within 5 minutes. Based on the performance of the control TED, this meant that a candidate TED would fail the test with 4 turtle captures because of the statistical probability the candidate TED may not achieve the standard (*i.e.,* control TED performance) turtle exclusion rate of 97 percent or more. Testing of the double cover and 71-inch (180-cm) flap openings with 2 inch (5.1 cm) stretched mesh webbing resulted in 0 captures and 25 escapes, and 1 capture and 24 escapes, respectively. Accordingly, use of 2-inch mesh flap webbing passed the certification test under the small turtle testing protocol.

**Boone Big Boy TED**

NMFS is also proposing to amend 50 CFR 223.207(b) to allow the use of additional hard TED designs in the shrimp fishery. A straight bar style TED (often referred to as the Georgia Jumper TED) is allowable for use in a bottom-opening configuration with a maximum grid angle at 45 degrees in special areas of the South Atlantic and Gulf of Mexico (within these areas, known as Shrimp Fishery-Sea Turtle Conservation Areas, enhanced sea turtle conservation measures are required due to the presence of important nearshore habitat for benthic immature and subadult sea turtles, particularly Kemp's ridleys, and the likelihood of negative interactions with heavy shrimp trawling activity; 50 CFR 223.207(a)(3)(ii)). Bottom opening bent bar TEDs have been legal for use at angles up to 55 degrees as long as the last 4 inches of the bars are at an angle no greater than 45 degrees. The developer of the Georgia Jumper believed that his bottom-opening, straight-bar TED would pass the small turtle tests at an angle of 55 degrees with an enlarged escape opening.

The Boone Big Boy TED is a large Georgia Jumper grid with an enlarged escape opening. Specifically, the Boone Big Boy TED grid is 48 inches high by 36.5 inches wide. Due to the size of this TED, a brace bar is attached to the aft face of the grid.

The Boone Big Boy TED was submitted for testing with the small turtle testing protocol in June 2008. The Boone Big Boy TED was installed at 54 degrees and was outfitted with a bottom-oriented Boone Wedge Cut escape opening. Testing resulted in 1 capture and 24 escapes, which passes the certification test under the small turtle testing protocol.

**Boone Wedge Cut Escape Opening**

NMFS is also proposing to amend 50 CFR 223.207(a)(7)(ii) to allow the use of additional TED escape openings in the shrimp fishery. The Boone Wedge Cut escape opening is an enlarged escape opening created by a triangular panel of additional webbing inserted into the trawl as an alternative to the removal of webbing from the trawl to achieve a 71-inch (180-cm) or larger opening for single grid hard TEDs.

The Boone Wedge Cut escape opening is made by making two cuts in the TED extension; one cut is fore and aft (*i.e.,* along the length of the extension) and the other cut is horizontal to the extension. The horizontal cut is 50 meshes long and begins at a point 4 inches (10.2 cm) inward from the outside edge of the grid on one side and runs to the same point on the opposite side of the grid. The fore and aft cut begins in the middle of the horizontal cut and runs forward 49.5 inches (125.7 cm) toward the front edge of the TED extension. The added wedge of webbing is attached along its two leading edges to the edges of the fore and aft cut. The webbing wedge is made of 1⅞ inch (4.8 cm) webbing and must have at least 41

meshes measuring at least 72 inches wide (182.9 cm) along its base (aft edge). The height of the wedge must measure at least 48.5 inches (123.2 cm). The top of the wedge is two bars across the leading edge then cut with a 1 point then 6 bar taper.

An important element of the Boone Wedge Cut escape opening is the aforementioned taper of the webbing wedge sewn into the slit of the extension webbing. Taper is usually expressed as the ratio between the cuts in the components of the mesh that reduce the width of the panel of webbing and the cuts straight aft that extend the length of the panel of webbing. An understanding of net-making terminology is necessary to comprehend the conventions used in describing taper. An individual mesh is composed of four equal lengths of twine, joined by four knots, and the webbing is usually hung in the body of a trawl so that all the meshes form diamond shapes, with the long axis of the diamonds oriented fore-and-aft. The two lengths of twine and the intervening knot on the left and right sides of the mesh are known as "points," and the individual lengths of twine are known as "bars." Since a single bar is half the width of an entire mesh, cutting a bar on the outside edge of a panel of webbing reduces the width of that row of meshes by one half mesh. Continuing cutting in the same direction through the bars on the opposite sides of each mesh and leaving an uncut edge of bars all lying in the same line produce an "all-bar" taper. An all-bar taper reduces the width of a panel of webbing by one mesh for every two rows of twine cut. The all-bar taper is the steepest angle of taper that is used in any portion of the escape opening. Lesser degrees of taper can be produced by interspersing bar cuts with point cuts—cuts straight aft through both lengths of twine in a point. A point cut extends the length of a webbing panel by one mesh without reducing the width. For example, the "6 bars, 1 point" (6b1p) taper of the Boone Wedge Cut escape opening indicates a taper in which the net maker would cut a sequence of six bars (inward) followed by one point (aft). A "straight" or "all-point" cut indicates a cut that leaves all points along the cut edge and that does not reduce the width of the webbing panel. Figure 1 illustrates the components of trawl webbing and offers examples of different tapers:

BILLING CODE 3510–22–P

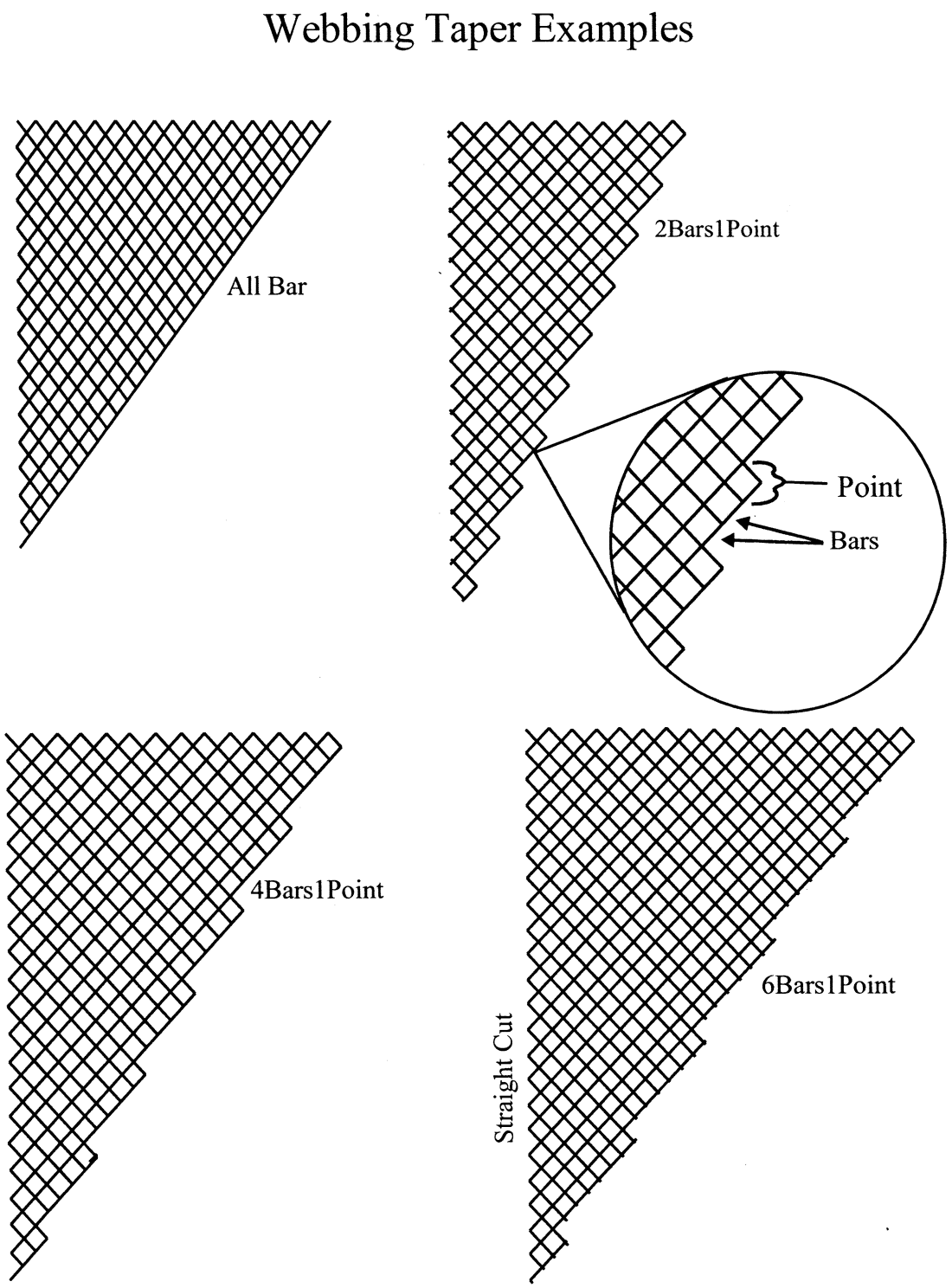


Figure 1. Illustration for Soft TED Designs of the Components of Trawl Webbing and Examples of Tapers.

BILLING CODE 3510–22–C

During testing in 2003 under the small turtle testing protocol, the Boone Wedge Cut escape opening was installed in a 180-mesh (circumference) by 51-mesh (depth) TED extension; the mesh size of the TED extension was 1⅞ inch (4.8 cm) stretched mesh. The TED frame was installed in a bottom-opening configuration and was measured at 50 degrees. Two K–50 Spongex floats were attached to the upper outside half of the TED frame. In a sample size of 25 turtles, the bottom-opening control TED captured 0 turtles. A turtle is considered captured if it fails to escape through the TED within 5 minutes. Based on the performance of the control TED, this meant that a candidate TED would fail the test with 1 turtle capture because of the statistical probability the candidate TED may not achieve the standard (*i.e.,*

control TED performance) turtle exclusion rate of 97 percent or more. Testing of the Boone Wedge Cut escape opening in 2003 resulted in 2 captures and 23 escapes. This result failed to meet the minimum test requirement for certification. NMFS' gear specialists believed the 50-degree fishing angle of the TED was the likely cause of the two turtle captures.

The Boone Wedge Cut escape opening was re-tested via the small turtle testing protocol in 2004 in a top-opening configuration. The TED angle was measured at 50 degrees. All other aspects of the TED installation and opening design were identical to that which was tested in 2003. In a sample size of 25 turtles, the top-opening control TED captured 2 turtles. A turtle is considered captured if it fails to escape through the TED within 5 minutes. Based on the performance of the control TED, this meant that a candidate TED would fail the test with 4 turtle captures because of the statistical probability the candidate TED may not achieve the standard (*i.e.,* control TED performance) turtle exclusion rate of 97 percent or more. Testing of the Boone Wedge Cut escape opening in 2004 resulted in 0 captures in a sample of 25 turtles, passing the certification test under the small turtle testing protocol.

The Boone Wedge Cut escape opening was also tested for leatherback turtle exclusion through the use of an aluminum frame model of an adult leatherback sea turtle controlled by a diver within the trawl and pushing it through the experimental TED opening. This model was used to design and test the current 71-inch and double-cover TED openings. The leatherback model measured 40 inches (101.6 cm) in width, 60 inches (152.4 cm) in length, and 21 inches (53.3 cm) in height. The evaluation was conducted in two separate trials pushing the model through the opening in a carapace-up and carapace-down configuration. In both configurations, the model passed through the Boone Wedge Cut escape opening easily.

Additional evaluations of the Boone Wedge Cut escape opening were conducted in November and December 2004, during trawling operations aboard the R/V GEORGIA BULLDOG, and permitted pursuant to 50 CFR 223.207(e)(2). The evaluations were conducted using remote cameras during actual fishing operations in near-shore waters off the coast of Georgia and Florida. During the evaluations, 30 wild turtles were observed escaping from a bottom-shooting Boone Wedge Cut escape opening; no turtle captures (*i.e.,* failing to escape through the TED within 5 minutes) were observed.

**Large TED Escape Openings**

NMFS is also proposing to amend 50 CFR 223.207(a)(7)(ii) to allow the use of additional TED escape openings in the shrimp fishery. Shrimp fishermen in Australia have been using a large triangular cut TED escape opening for many years. Because this cut is made along the bars of the trawl webbing, the strain of large codend loads is transferred more efficiently along edges of the cut. This design results in less distortion of the TED opening and flap over time as well as providing better support and angle retention for the TED frame, especially with larger TED frames and trawls.

The triangular cut forms an isosceles triangle (*i.e.,* two sides of equal length) with dimensions that can be configured to meet the minimum dimensional requirements for the exclusion of leatherback sea turtles (*i.e.,* per 50 CFR 223.207(a)(7)(ii)(B)). In order for a triangular cut to meet the minimum dimensions, the length of the two sides of the cut, forward of the TED frame, must be longer than that which is needed for a rectangular TED opening. Additionally, the base measurement of the triangular cut, that is, the minimum straight-line distance of the opening at the TED frame, must be larger. This prevents this style of cut from being used on smaller TED frames.

In 2006, the triangular cut was evaluated by NMFS' gear specialists as an alternate opening for the exclusion of leatherback sea turtles. The evaluations were conducted with no flap covering the TED opening. The evaluations were conducted with the use of an aluminum-frame leatherback sea turtle model controlled by a diver within the trawl and pushing it through the experimental TED opening. This evaluation technique was used to approve the 71-inch (180-cm) offshore and double-cover offshore TED openings (50 CFR 223.207(a)(7)(ii)(B) and (C)). For this evaluation, the triangular cut dimensions were configured to match the minimum perimeter dimensions of a rectangular cut, which has already been approved for the exclusion of leatherback sea turtles (*i.e.,* per 50 CFR 223.207(a)(7)(ii)(B)). For the evaluation, the selected triangular cut straight-line measurement at the TED frame was 40 inches (101.6 cm) in order to match the width of the leatherback model.

Divers experienced no difficulty in pushing the model leatherback frame through the triangular TED opening. The evaluation was conducted in two separate trials pushing the model through the opening in a carapace-up and carapace-down configuration. Based on these observations, NMFS concludes a triangular cut TED opening is an effective TED escape opening design for the exclusion of leatherback sea turtles.

As TED use is expanded to large-trawl fisheries, larger TED frames are needed to better fit the trawls. Alternate escape opening cuts are needed, which will maintain the strength of the TED system even when large codend loads are experienced. The triangular cut TED opening described previously provides one escape opening that also ensures the strength of the TED and TED extension are maintained. Additional large TED escape openings provide greater flexibility in designing the TED escape opening cut to meet variations in large trawl and large TED designs, while maintaining minimum opening dimensions required for the exclusion of leatherback sea turtles.

Additional variations of the triangular cut being proposed in this rulemaking include a similar all-bar cut, but with an additional horizontal leading edge cut that produces a trapezoid escape opening, as well as an all-points side cut that produces a rectangular escape opening. As with the triangular cut, the sum of the straight line, stretched measurements of the opening at the TED frame, the two side cuts and the leading edge cut must be equal to or greater than 147 inches (373.4 cm); therefore, this design will meet the minimum circumference measurement in 50 CFR 223.207(a)(7)(ii)(B)) of 142 inches.

**Double Cover Interior Escape Flap**

NMFS is also proposing to amend 50 CFR 223.207(d)(3), to allow the use of additional TED escape opening flap configurations in the shrimp fishery. In 2008, NMFS evaluated several flap designs for installation with the triangular cut TED escape opening. Diver evaluations of the triangular cut TED escape opening with either the double-cover or 71-inch (180-cm) flaps revealed a potential turtle capture problem. With a rectangular flap sewn over the triangular cut, pockets were formed between the outside of the TED extension and the flap in an area between the apex of the cut and the sides of the flap. These areas could be problematic for smaller, juvenile turtles as they could become entrapped. As a solution to this problem, NMFS' gear specialists designed a flap which is installed inside the TED extension, thereby eliminating the pocket areas formed with an exterior flap installation. This flap system is labeled the double-cover interior flap (DCI flap).

The triangular cut and DCI flap opening were evaluated by NMFS' gear specialists using the small turtle testing protocol in June 2008. The triangular cut with a DCI flap was installed on a 51-inch (129.5-cm) high by 42-inch (106.7-cm) wide bent-bar TED (50 CFR 223.207(a)(3)(ii)) in a top-opening configuration. The dimensions of the flap met all existing regulatory requirements pertaining to the double-cover flap, with the exception that the leading edge and sides of each flap piece were attached to the inside of the TED extension. At the point where the sides of each flap piece intersected the TED frame, the flap sides were then sewn to a row of meshes aft of the TED frame and on the outside of the TED extension. NMFS' diver observations confirmed that this method of attaching the flap provided a much smoother shape and more uniform seal against the TED frame while fishing, especially when installed on large TED frames, which require larger pieces of flap material to cover the TED opening.

During the small turtle testing protocol, the top-opening control TED scored 0 turtle captures in a sample size of 25 turtles. A turtle is considered captured if it fails to escape through the TED within 5 minutes. Testing of the triangular cut with a DCI flap resulted in 0 turtle captures in a sample of 25 turtles, thus matching the control TED performance and passing the certification test under the small turtle testing protocol.

Additional evaluations of the triangular cut and DCI flap were conducted in March 2008, during trawling operations aboard the R/V GEORGIA BULLDOG, permitted pursuant to 50 CFR 223.207(e)(2). The evaluations were conducted using remote cameras during actual fishing operations in near-shore waters off the coast of Georgia. The opening was evaluated on a 51-inch (129.5-cm) high by 42-inch (106.7-cm) wide bent-bar TED in a bottom-opening configuration. During the evaluations, two wild turtles were observed escaping from the triangular opening with a DCI flap; no turtle captures (*i.e.,* failing to escape through the TED within 5 minutes) were observed.

**Chauvin Shrimp Deflector**

NMFS is also proposing to amend 50 CFR 223.207(d) to add a shrimp deflector as an allowable modification to hard TEDs. As a means of reducing the loss of shrimp through the TED opening, a Louisiana fisherman developed a simple shrimp deflector device pursuant to 50 CFR 223.207(e)(2). The device consists of a length of 3-inch (7.6-cm) diameter PVC pipe positioned perpendicular to the flow of water within the trawl along the leading edge of the TED escape opening. Shrimp that are moving down the top of the trawl and TED extension come in contact with the pipe and are deflected down and away from the TED escape opening.

To ensure that the Chauvin shrimp deflector would not interfere with the escapement of turtles, the device was evaluated using the small turtle testing protocol. The device was installed in a top-opening, bent-bar TED which measured 52 inches (132.1 cm) in height by 42 inches (106.7 cm) in width. A double-cover flap was installed over the opening and modified by the installation of zippers along the leading edge of each flap piece. The zippers allow each flap piece of the double-cover flap to be easily rolled back to allow for improved fish escapement through the TED. Testing of the Chauvin shrimp deflector resulted in 0 turtle captures out of 25 trials, thereby passing the test for certification. An additional evaluation was conducted to ensure that the device would not prevent the escapement of larger sea turtles through the TED escape opening. The evaluation was conducted through the use of an aluminum-frame leatherback sea turtle model, controlled by a diver within the trawl and pushing it through the experimental TED opening. The leatherback model measured 40 inches (101.6 cm) in width, 60 inches (152.4 cm) in length, and 21 inches (53.3 cm) in height. Divers experienced no difficulty in pushing the model leatherback frame through the double-cover TED opening with the Chauvin shrimp deflector installed. Due to anticipated issues with debris accumulation and subsequent turtle escapement, the Chauvin shrimp deflector was not tested in a bottom-opening TED configuration; therefore, it may not be installed in a net with a bottom escape opening.

**Parker TED Offshore Opening**

The current specifications at 50 CFR 223.207(c)(1)(iv)(B) for the offshore opening of the Parker TED allow the use of a single row of steel chain no larger than 3⁄16 inch (0.48 cm) to be sewn on to the back edge of the webbing flap. However, when the Parker TED was tested and certified by NMFS' gear specialists in June 1997, it was rigged with ¼ inch (0.64 cm) steel chain. Therefore, the proposed rule would amend 50 CFR 223.207(c)(1)(iv)(B) to correct this error and allow the use of chain no larger than ¼ inch (0.64) to be used on the trailing edge of the webbing flap.

**Modified Flounder TED**

NMFS is also proposing to amend 50 CFR 223.207(b), to add an additional TED for use in the summer flounder fishery. As an alternative to the flounder TED specified at 50 CFR 223.207(b)(1), the Northeast Fisheries Science Center and industry developed a modified flounder TED grid that offered a larger grid surface to mitigate potential clogging issues to improve catch retention, and which had the ability to be rolled onto a net reel. The modified flounder TED consists of two frame sections 36 inches (91.4 cm) in height and 48 inches (121.9 cm) in width, which are lashed together with heavy twine in order to maintain a consistent angle in both sections. The perimeter of the modified flounder TED is constructed of round pipe, while the deflector bars are constructed of flat bar. The upper frame section consists of vertical flat deflector bars, while the lower frame section has angled horizontal flat bars. The lower frame section also has three rectangles, each with a height of 10 inches (25.4 cm) and a width of 14 inches (35.6 cm), which are framed using round pipe.

The modified flounder TED was evaluated using the small turtle test protocol in June 2008. In a sample size of 25 turtles, the top-opening control TED captured 0 turtles. A turtle is considered captured if it fails to escape through the TED within 5 minutes. Based on the performance of the control TED, this meant that a candidate TED would fail the test with 1 turtle capture because of the statistical probability the candidate TED may not achieve the standard (*i.e.,* control TED performance) turtle exclusion rate of 97 percent or more. The modified flounder TED was tested in a top-opening configuration installed at 30 degrees with 5-inch bar spacing in the upper grid, and captured 2 turtles in 14 turtle exposures, at which point the evaluation was terminated; both of these turtle captures occurred when the turtles passed through the 5-inch bar spacing of the upper grid. The modified flounder TED was reconfigured with 4-inch bar spacing and re-tested. The modified flounder TED with 4-inch bar spacing in the upper grid (top-opening configuration installed at 30 degrees) captured 0 turtles in a sample size of 25 exposures, passing the certification test under the small turtle testing protocol; due to time constraints, testing was not conducted at higher angles.

The modified flounder TED was again evaluated using the small turtle test

protocol in July 2009 to determine its effectiveness at higher angles. In a sample size of 25 turtles, the top-opening control TED captured 2 turtles. A turtle is considered captured if it fails to escape through the TED within 5 minutes. Based on the performance of the control TED, this meant that a candidate TED would fail the test with 1 turtle capture because of the statistical probability the candidate TED may not achieve the standard (*i.e.,* control TED performance) turtle exclusion rate of 97 percent or more. The modified flounder TED was tested in a top-opening configuration installed at 55 degrees, and captured 3 turtles in 7 exposures, failing the certification test under the small turtle testing protocol. The modified flounder TED was re-installed at 45 degrees, and captured 0 turtles in 25 exposures, passing the certification test under the small turtle testing protocol. Therefore, the modified flounder TED is certified for use only at angles between 30 and 45 degrees.

### Addition of Brace Bars as Allowable Modifications to Hard TEDs and Special Hard TEDs

NMFS is also proposing to amend 50 CFR 223.207(d), to allow the use of a horizontal brace bar on a TED to increase the strength of the grid and prevent flexing of the vertical deflector bars. When properly installed on the rear face of the TED grid, a brace bar has no effect on turtle exclusion out of the TED escape opening. While a brace bar is required on the proposed flat bar TED, NMFS proposes to add brace bars as an allowable optional modification to other hard TEDs. Specifically, a brace bar constructed of aluminum or steel rod or tubing specified in 50 CFR 223.207(a)(1)(i)(A) through (C) may be added to a TED to prevent spreading of the deflector bars beyond the maximum allowable 4 inch (10 cm) spacing between the bars (50 CFR 223.207(a)(4)). The brace bar must be attached to the frame and each individual deflector bar, and may be welded directly to the aft face of the grid or may be attached with spacer bars no longer than 5 inches (12.7 cm) in length that are welded to the aft face of each deflector bar. Spacer bars attached to the deflector bars must be constructed of the same material as the deflector bars (*e.g.,* solid steel rod with a minimum outside diameter of ¼ inch (0.63 cm). For solid bar and tubing, spacers will need concave (*i.e.,* half-moon) shaped ends to be welded to the deflector and brace bar.

### Summary of Proposed Revisions to TED Requirements

Based on the documented results during TED testing, NMFS proposes to authorize: the use of ¼ inch (0.63 cm) thick and 1½ inch (3.8 cm) deep flat bar, and rectangular and oval pipe meeting the current minimum dimensions cited at 50 CFR 223.207(a)(1) as construction materials in currently-approved TED grids; an increase in maximum mesh size on escape flaps from 1⅝ to 2 inches (4.1 to 5.1 cm); the inclusion of the Boone Big Boy TED for use in the shrimp fishery; the use of three large TED and Boone Wedge Cut escape openings; and the use of the Chauvin Shrimp Deflector in a top-opening TED configuration to improve shrimp retention. NMFS also proposes to include a new TED for use in the summer flounder fishery. Additionally, there is a proposed correction to the TED regulations to rectify an error regarding the maximum size chain that can be used on the Parker TED escape opening flap, and the proposed addition of a brace bar as an allowable modification to hard TEDs.

### References Cited

Gulf and South Atlantic Fisheries Foundation, Incorporated. 2008. An Assessment of Turtle Excluder Devices within the Southeastern Shrimp Fisheries of the United States. NOAA/NMFS Cooperative Agreement Number NA04NMF4540112;#92.

### Certifications

This proposed rule has been determined to be not significant for purposes of Executive Order 12866.

The Chief Counsel for Regulation of the Department of Commerce certified to the Chief Counsel for Advocacy of the Small Business Administration that this rule would not have a significant economic impact on a substantial number of small entities. The basis for this certification follows:

This proposed rule would not impose any new requirements on fishing entities in the southeastern shrimp fishery. An exact number of total fishing entities in the southeastern shrimp fishery is unavailable, though approximately 5,000 vessels are estimated as currently active. This proposed rule would simply allow fishermen, at their discretion, to use an alternative TED in their shrimp nets. Any decision to use an alternative TED would be expected to occur only if a fisherman judges it will result in improved fishing performance without a substantial increase in cost. As a result, any effects are expected to be positive and no adverse economic impacts are expected to accrue. Therefore, an initial regulatory flexibility analysis is not required and none has been prepared.

The Endangered Species Act provides the statutory basis for this rule.

### List of Subjects in 50 CFR Part 223

Endangered and threatened species; Exports; Imports; Transportation.

Dated: August 26, 2010.

**Samuel D. Rauch III,**

*Deputy Assistant Administrator for Regulatory Programs, National Marine Fisheries Service.*

For the reasons set out in the preamble, 50 CFR Part 223 is proposed to be amended as follows:

## PART 223—THREATENED MARINE AND ANADROMOUS SPECIES.

1. The authority citation for part 223 continues to read as follows:

**Authority:** 16 U.S.C. 1531–1543; subpart B, § 223.201–202 also issued under 16 U.S.C. 1361 *et seq.;* 16 U.S.C. 5503(d) for § 223.206(d)(9).

2. In § 223.207, paragraph (a)(1)(i) introductory text is revised; paragraph (a)(1)(i)(C) is revised; new paragraph (a)(1)(i)(D) is added; paragraphs (a)(7)(ii)(D) and(E) are added; new paragraphs (b)(3) and(4) are added; paragraph (c)(1)(iv)(B) is revised; paragraphs (d)(3) introductory text and (d)(3)(iii) are revised; and paragraphs (d)(3)(iv), (d)(8), and (d)(9) are added, to read as follows:

**§ 223.207 Approved TEDs.**

* * * * *

(a) * * *

(1) * * *

(i) *Single-grid and inshore hooped hard TED.* A single-grid hard TED or an inshore hooped hard TED must be constructed of one or a combination of the following materials, unless otherwise specifically restricted below, with minimum dimensions as follows:

* * * * *

(C) Steel or aluminum round, oval, or rectangular tubing with a minimum outside diameter or width of ½ inch (1.27 cm) and a minimum wall thickness of ⅛ inch (0.32 cm; also known as schedule 40 tubing).

(D) Steel or aluminum flat bar with dimensions no less than ¼ inch (0.64 cm) in thickness by 1-½ inches (3.85 cm) in depth. For flat bar less than ⅜ inch (0.95 cm) in thickness, a horizontal brace bar to reinforce the deflector bars must be permanently attached to the frame and the rear face of each of the deflector bars within 4 inches (10.2 cm) of the midpoint of the TED frame. The

horizontal brace bar must be constructed of approved material consistent with paragraph (a)(1)(i) of this section. The horizontal brace bar may be offset behind the deflector bars, using spacer bars, not to exceed 5 inches (12.7 cm) in length and constructed of the same size or larger flat bar as the deflector bars.

* * * * *

(7) * * *

(ii) * * *

(D) *Boone Wedge Cut opening.* (Figure 17 to this part). The escape opening is made by making two cuts in the TED extension; one cut is fore and aft (*i.e.,* along the length of the extension) and the other cut is horizontal to the extension. The horizontal cut is 50 meshes long and begins at a point 4 inches (10.2 cm) inward from the outside edge of the grid on one side and runs to the same point on the opposite side of the grid. The fore and aft cut begins in the middle of the horizontal cut and runs forward 49.5 inches (125.7 cm) toward the front edge of the TED extension. The added wedge of webbing is attached along its two leading edges to the edges of the fore and aft cut. The webbing wedge is made of 1⅞ inch (4.8 cm) webbing and must have at least 41 meshes measuring at least 72 inches wide (182.9 cm) along its base (aft edge). The height of the wedge must measure at least 48.5 inches (123 cm). The top of the wedge is two bars across the leading edge then cut with a 1 point then 6 bar taper. A webbing flap, as described in paragraph (d)(3)(iv) of this section, may be used with this escape opening, so long as the minimum opening size is achieved.

(E) *Large TED openings.* (Figures 18a, 18b, and 18c of this part). Large TED escape openings may be utilized in the following configurations:

(*1*) A triangular cut (Figure 18a to this part), where the base of the triangle is defined by a straight-line measurement of the opening between the webbing attachment points on the TED frame that is no less than 40 inches (102 cm). The two side cuts of the triangle must be an all-bar taper from the point at which the webbing attaches to the TED frame to the apex of the triangle cut. Each side cut of the triangle must measure no less than 53 inches (135 cm). The sum of the straight-line base measurement and two side cuts must be no less than 147 inches (373 cm). The side cuts of the triangular opening may be reinforced using rib lines attached from the TED frame to the apex of the opening. A webbing flap, as described in either paragraph (d)(3)(ii) or (iii) of this section, may be used with this escape opening, so long as the minimum opening size is achieved.

(*2*) All-bar or all-points side cuts and a horizontal leading edge cut (Figures 18b and 18c to this part), where the straight-line measurement of the opening between the webbing attachment points on the TED frame may not be less than 40 inches (102 cm), and the two side cuts of the escape opening must not be less than 26 inches (66 cm) long from the points of the cut immediately forward of the TED frame. Only all-bar or all-points side cuts may be used; no combination tapers may be used when making the side cuts. The sum of the straight-line base measurement and the stretched measurements of the side cuts and leading edge cut must be no less than 147 inches (373 cm). A webbing flap, as described in either paragraph (d)(3)(ii) or (iii) of this section, may be used with this escape opening, so long as the minimum opening size is achieved.

* * * * *

(b) * * *

(3) *Boone Big Boy TED.* The Boone Big Boy TED is a single-grid hard TED with a minimum outside horizontal and vertical measurement of 36.5 inches (92.7 cm) and 48 inches (121.9 cm), respectively. The frame must be constructed of steel rod with a minimum outside diameter of ½ inch (1.3 cm). The deflector bars must be constructed of steel rod with a minimum outside diameter of ¼ inch (0.64 cm). The space between the deflector bars must not exceed 4 inches (10.2 cm). A horizontal brace bar constructed of at least ¼ inch (0.64-cm) steel rod must be permanently attached to the frame and the rear face of each of the deflector bars within 4 inches (10.2 cm) of the midpoint of the TED frame. The horizontal brace bar may be offset behind the deflector bars, using spacer bars, not to exceed 5 inches (12.7 cm) in length and must be constructed of the same size or larger material as the deflector bars. The Boone Big Boy TED must be used with the Boone Wedge Cut escape opening specified in (a)(7)(ii)(D) of this section. The angle of the deflector bars must be between 30° and 55° from the normal, horizontal flow through the interior of the trawl. The Boone Big Boy TED is exempt from the requirements of paragraph (a)(3)(ii) of this section, and may be installed at 55° when fishing in the Gulf SFSTCA or the Atlantic SFSTCA.

(4) *Modified flounder TED.* (Figure 11 to this part). The modified flounder TED is approved for use only in the Atlantic summer flounder bottom trawl fishery. The modified flounder TED is not an approved TED for use by shrimp trawlers. The modified flounder TED incorporates two separate grid frames that are attached together. The frames of the grids must be constructed of at least 1¼ inch (3.2 cm) outside diameter aluminum or steel pipe with a wall thickness of at least ⅛ inch (0.32 cm). Each of the two grids of the modified flounder TED must have outside dimensions of at least 36 inches (91.4 cm) in height and at least 48 inches (121.9 cm) in width. The upper grid is equipped with vertical deflector bars, which must be constructed of aluminum or steel flat bar with a minimum depth of 1¼ inches (3.2 cm) and a minimum thickness of ⅜ inch (0.95 cm). Vertical deflector bars must be connected to the top and bottom of the upper grid. The space between the deflector bars of the upper grid must not exceed 4 inches (10.2 cm). The lower grid is fabricated with both horizontal and vertical deflector bars, creating four narrow horizontal openings at the top, and three large rectangular openings along the bottom of the grid. The lower grid must have at least three horizontal deflector bars, constructed of aluminum or steel flat bar with a minimum depth of 1½ inches (3.8 cm) and a minimum thickness of ⅜ inch (0.95 cm), which are connected to each side of the grid and angled at 30° from the horizontal plane. Below this, a fourth horizontal deflector bar must be constructed of aluminum or steel pipe with a wall thickness of at least ⅛ inch (0.32 cm) and with a 1¼ inch (3.2 cm) outside diameter. These horizontal deflector bars must yield maximum spacings of 4½ inches (11.4 cm), 5½ inches (14.0 cm), 5½ inches (14.0 cm), and 4½ inches (11.4 cm), as constructed from top to bottom and measured between the leading edges of adjacent deflector bars. There must be a maximum 10-inch (25.4 cm) space between the bottom-most horizontal deflector pipe bar and the grid frame bottom. Two additional vertical pipe sections running from the bottom of the grid frame to the bottom-most horizontal deflector pipe bar must divide the opening at the bottom into three rectangles, each with a maximum height of 10 inches (25.4 cm) and a maximum width of 14 inches (35.6 cm). This TED must comply with paragraph (a)(2) of this section. The upper and lower grids of this TED must be laced together with heavy twine no less than ¼ inch (0.64 cm) in diameter in order to maintain a consistent angle in both sections. There may be a gap between the two sections not to exceed 1 inch (2.54 cm). The angle of the entire TED frame must be between 30° and 45° from

the normal, horizontal flow through the interior of the trawl. The entire width of the escape opening from the trawl must be centered on and immediately forward of the frame at the top of the net when the net is in its deployed position. The slope of the grids and the vertical deflector bars from forward to aft is upward. The modified flounder TED must use an escape opening consistent with paragraph (a)(7)(ii)(B), (C), (D), or (E) of this section. A webbing flap, as described in paragraphs (d)(3)(ii), (iii), or (iv) of this section, may be used with this escape opening, so long as the minimum opening size is achieved. This TED may not be configured with a bottom escape opening. Installation of an accelerator funnel is not permitted with this TED.

(c) * * *

(1) * * *

(iv) * * *

(B) *Offshore opening.* A horizontal cut extending from the attachment of one side of the deflector panel to the trawl to the attachment of the other side of the deflector panel to the trawl must be made in a single row of meshes across the top of the trawl and measure at least 96 inches (243.8 cm) in taut width. All trawl webbing above the deflector panel between the 96-inch (243.8-cm) cut and edges of the deflector panel must be removed. A rectangular flap of nylon webbing not larger than 2-inch (5.1-cm) stretched mesh may be sewn to the forward edge of the escape opening. The width of the flap must not be larger than the width of the forward edge of the escape opening. The flap must not extend more than 12 inches (30.5 cm) beyond the rear point of the escape opening. The sides of the flap may be attached to the top of the trawl but must not be attached farther aft than the row of meshes through the rear point of the escape opening. One row of steel chain not larger than ¼ inch (0.64 cm) may be sewn evenly to the back edge of the flap. The stretched length of the chain must not exceed 96 inches (244 cm). A Parker TED using the escape opening described in this paragraph meets the requirements of § 223.206(d)(2)(iv)(B). This opening or one that is larger must be used in all offshore waters and in the inshore waters of Georgia and South Carolina. It also may be used in other inshore waters.

* * * * *

(d) * * *

(3) *Webbing flap.* A webbing flap may be used to cover the escape opening under the following conditions: No device holds it closed or otherwise restricts the opening; it is constructed of webbing with a stretched mesh size no larger than 2 inches (5.1 cm); it lies on the outside of the trawl; it is attached along its entire forward edge forward of the escape opening; it is not attached on the sides beyond the row of meshes that lies 6 inches (15.2 cm) behind the posterior edge of the grid; the sides of the flap are sewn on the same row of meshes fore and aft; and the flap does not overlap the escape hole cut by more than 5 inches (12.7 cm) on either side.

* * * * *

(iii) *Double cover offshore TED flap.* This flap must be composed of two equal size rectangular panels of webbing. Each panel must be no less than 58 inches (147.3 cm) wide and may overlap each other no more than 15 inches (38.1 cm). The panels may only be sewn together along the leading edge of the cut. The trailing edge of each panel must not extend more than 24 inches (61 cm) past the posterior edge of the grid (Figure 16 to this part). Each panel may be sewn down the entire length of the outside edge of each panel. Paragraph (d)(3) of this section notwithstanding, this flap may be installed on either the outside or inside of the TED extension. For interior installation, the flap may be sewn to the interior of the TED extension along the leading edge and sides to a point intersecting the TED frame; however, the flap must be sewn to the exterior of the TED extension from the point at which it intersects the TED frame to the trailing edge of the flap. Chafing webbing described in paragraph (d)(4) of this section may not be used with this type of flap.

(iv) *Boone Wedge Cut opening flap.* (Figure 17 to this part). This escape opening flap is attached to the trailing edge of the horizontal cut and the wedge. The flap is made from a piece of 1-⅞ inch (4.8 cm) webbing that is trapezoid in shape. The leading edge must be at least 94 meshes wide, stretching to at least 164.5 inches (417.8 cm). The trailing edge is at least 87 meshes wide and at least 152 inches (386.1 cm). The two sides are at least 8 meshes long and at least 15 inches (38.1 cm). The escape opening flap is attached only to the leading edge of the escape opening cut and is not attached along its sides.

* * * * *

(8) *Chauvin shrimp deflector.* (Figures 19a and 19b of this part). The Chauvin shrimp deflector may be used on any approved TED design, but its installation must not reduce the minimum stretched measurements of the TED opening. The Chauvin shrimp deflector may not be installed with a bottom escape opening. The Chauvin shrimp deflector is constructed from a single piece of 3-inch (7.6-cm) inside diameter PVC pipe which measures 30 inches (76.2 cm) in length; the ends of the PVC pipe are left uncapped. A webbing or mesh bag is made and is used to encase the PVC pipe (Figure 19a to this part). The mesh bag is created using a single piece of 1-⅝ inch (4.1 cm) stretched-mesh webbing made of nylon or polyethylene with dimensions 57 meshes wide by 10 meshes deep. The leading edge of the 57-mesh piece of webbing is attached around the PVC pipe and back to the row of meshes located 7 meshes down the 10-mesh length. The ends of the webbing are sewn together on each end forming a webbing bag to assure the PVC pipe remains encased in the webbing. This leaves a 3-mesh tail hanging from the encased PVC pipe. The 3-mesh tail of the encased PVC pipe is then sewn to a single row of meshes on the inside of the trawl along the 57-mesh edge, 3 meshes ahead of the forward cut of the TED escape opening. This would allow a 3-mesh overlap to the left and right of the forward cut (Figure 19b of this part).

(9) *Brace bar.* (Figure 14a of this part). A horizontal brace bar may be added to a TED if it is constructed of aluminum or steel rod or tubing specified in 50 CFR 223.207(a)(1)(i)(A) through (C) and it is permanently attached to the frame and the rear face of each of the deflector bars within 4 inches (10.2 cm) of the midpoint of the TED frame. The horizontal brace bar may be offset behind the deflector bars, using spacer bars, not to exceed 5 inches (12.7 cm) in length and must be constructed of the same size or larger material as the deflector bars.

* * * * *

3. Add Figure 11 to Part 223 to read as follows:

Figure 11 to Part 223—Modified Flounder TED

BILLING CODE 3510–22–P

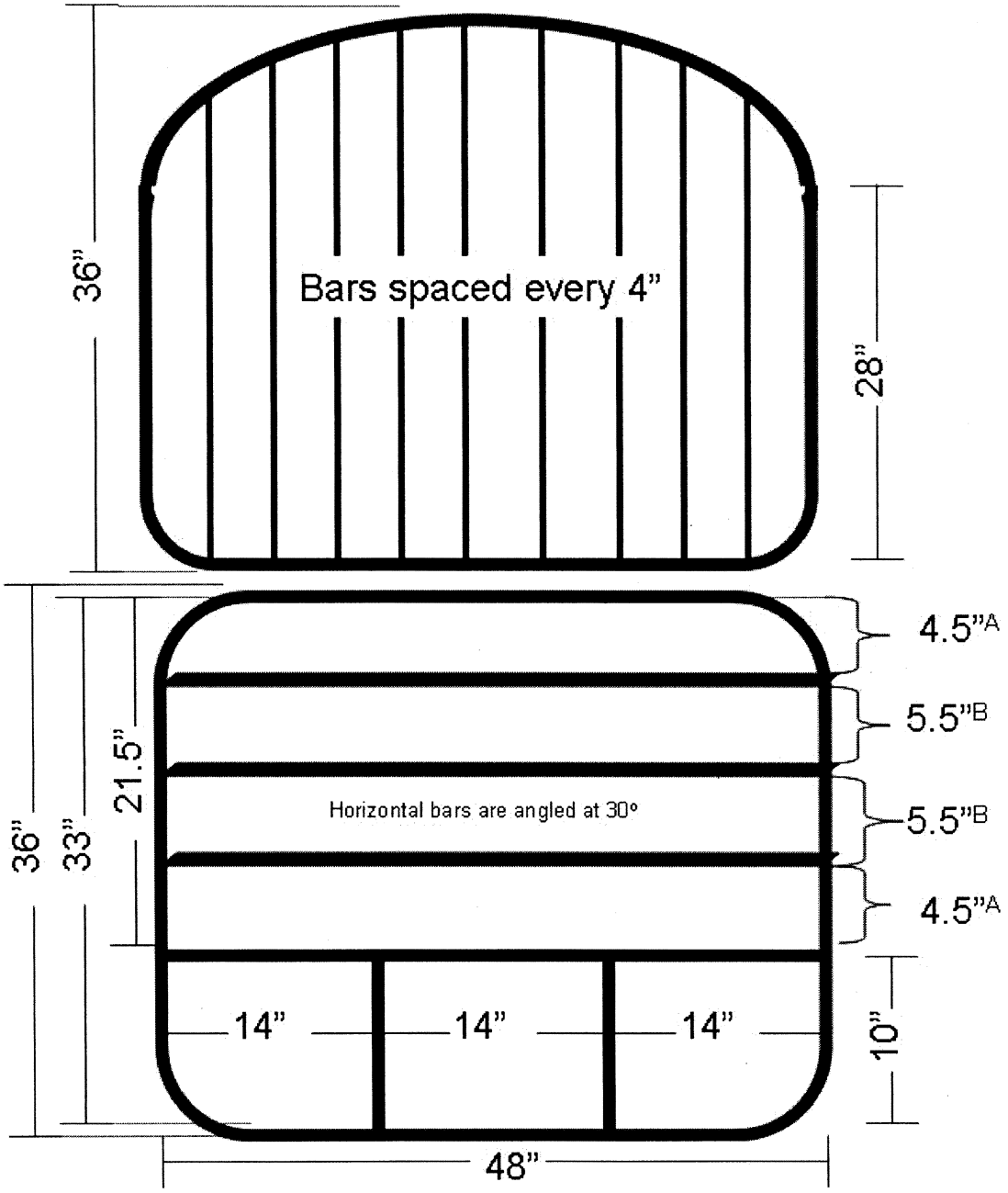


All pipe must be a minimum of 1.25" O.D.; horizontal flat bars shall be a minimum of 1.5" x 0.375"; vertical flat bars shall be a minimum of 1.25" x 0.375"

A – Space between edge of round bar and the leading edge of the adjacent bar is 4.5"

B – Space between leading edge of one bar and the leading edge of the adjacent bar is 5.5"

5. Add Figure 17 to Part 223 to read as follows:

Figure 17 to Part 223—Boone Wedge Cut Escape Opening

Escape Opening Cut Dimensions

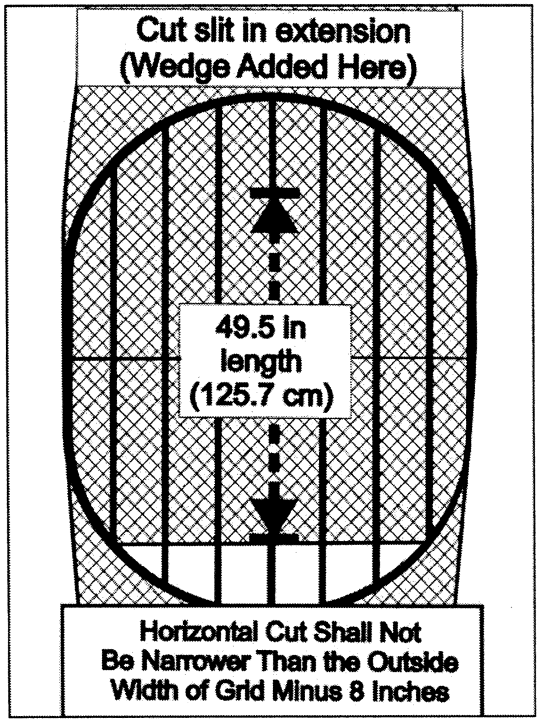


Webbing Wedge Dimensions

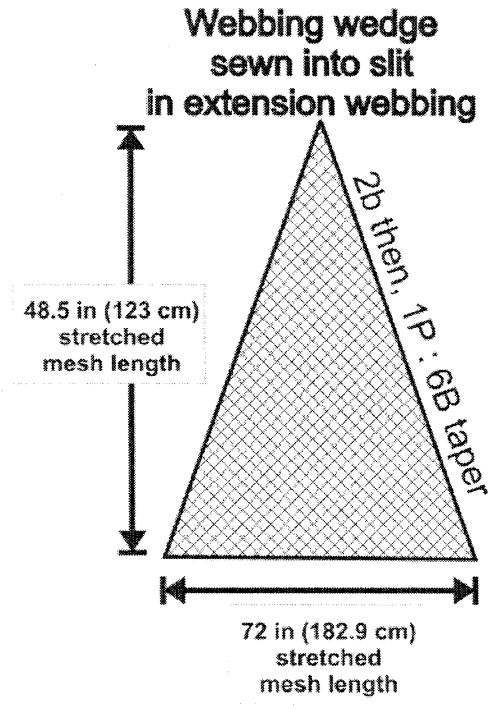


Escape Opening Flap Dimensions

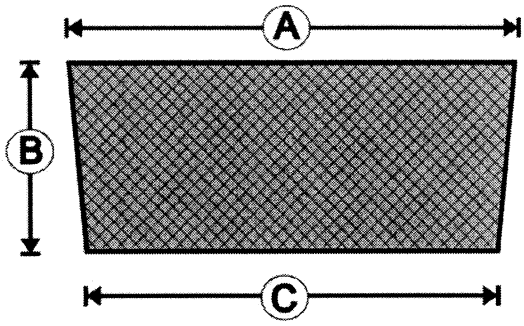


**A** Leading Edge Width -
164.5 Inches (417.8 cm) Stretched
(94 Meshes of 1-7/8 In. (48 mm) Webbing)

**B** Depth - 15 Inches (38 cm) Stretched
(8meshes of 1-7/8 In. (48 mm) Webbing)

**C** Width Trailing Edge -
152 Inches Stretched (87m of 1-7/8")

Escape Opening Flap Attachment

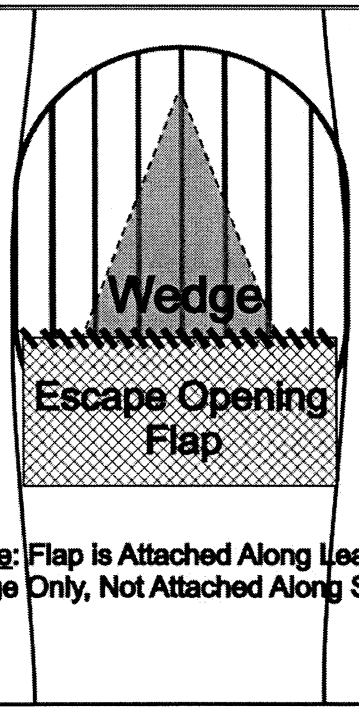


**Note: Flap is Attached Along Leading Edge Only, Not Attached Along Sides**

6. Add Figures 18a, 18b, and 18c to Part 223 to read as follows:

Figures 18a, 18b, and 18c to Part 223—Large Frame TED Escape Opening: Minimum Dimensions Using All-Bar Cuts (Triangular Cut); Large Frame TED Escape Opening: Minimum Dimensions Using All-Bar Cuts and Leading Edge Cut; Large Frame TED Escape Opening: Minimum Dimensions Using All-Points Side Cut (Rectangular Cut)

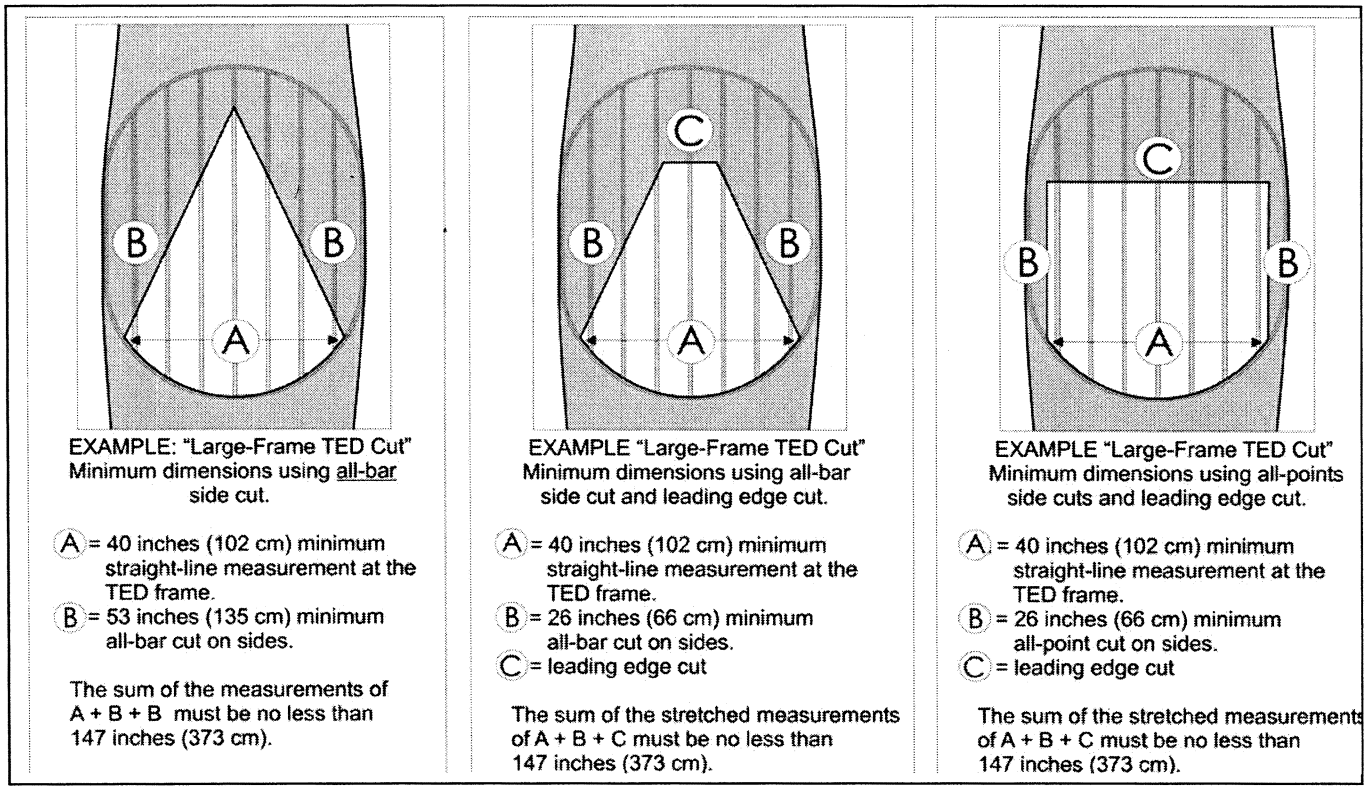


7. Add Figures 19a and 19b to Part 223 to read as follows:

Figures 19a and 19b to Part 223—Chauvin Shrimp Deflector Installation Details

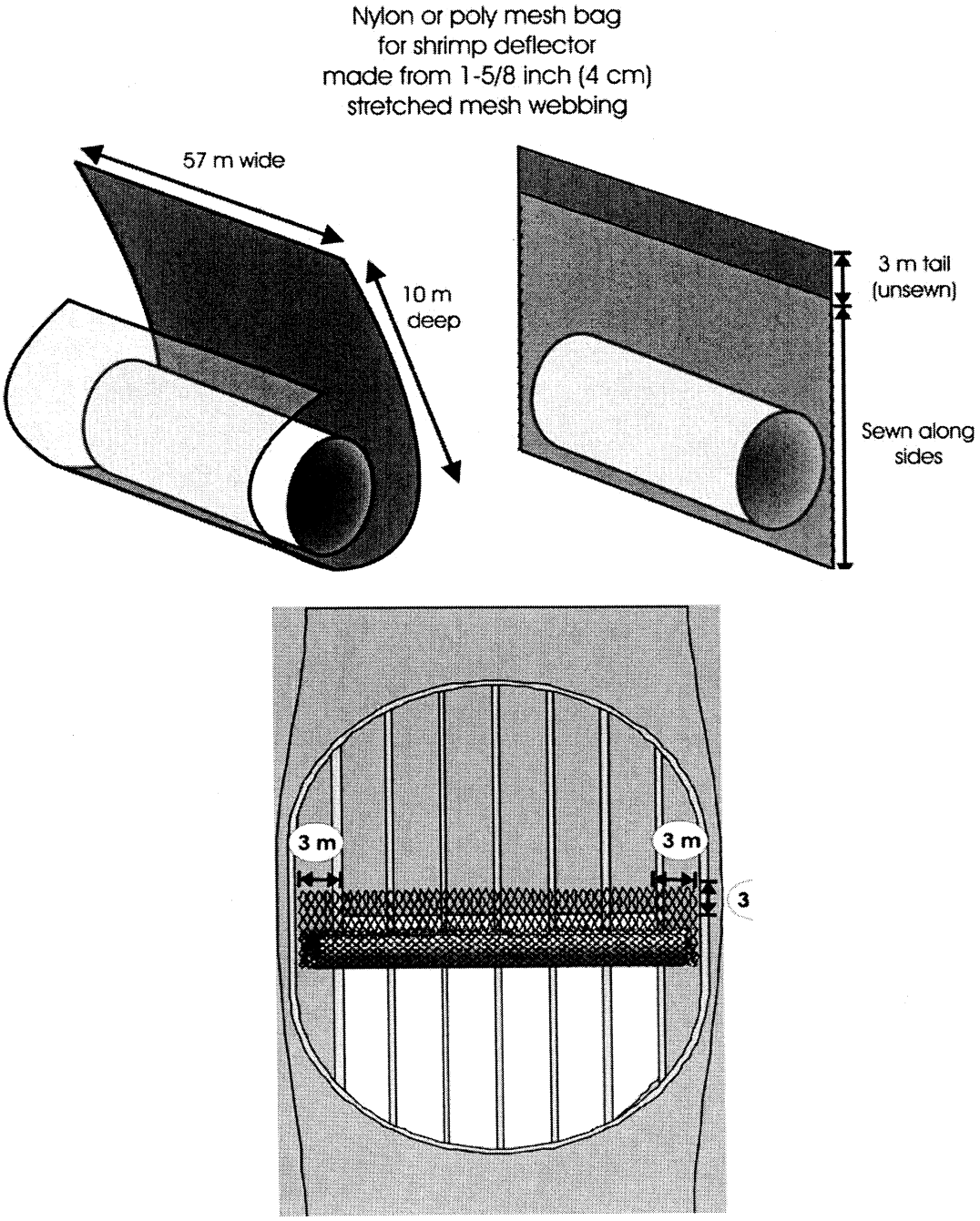


[FR Doc. 2010–21823 Filed 9–1–10; 8:45 am]
BILLING CODE 3510–22–C

**DEPARTMENT OF COMMERCE**

**National Oceanic and Atmospheric Administration**

**50 CFR Part 648**

**[Docket No. 100818375–0379–02]**

**RIN 0648–XX84**

## Magnuson-Stevens Act Provisions; Fisheries of the Northeastern United States; Northeast Multispecies Fishery; Proposed Rule To Implement Addenda to 17 Fishing Year (FY) 2010 Sector Operations Plans and Contracts

**AGENCY:** National Marine Fisheries Service (NMFS), National Oceanic and Atmospheric Administration (NOAA), Commerce.

**ACTION:** Proposed rule; request for comments.

**SUMMARY:** This action proposes to add certain exemptions from Federal fishing regulations to some or all Northeast (NE) multispecies sector operations plans that were previously approved by the final sector rule published April 9, 2010. That rule approved FY 2010 sector operations plans and contracts and allocations of Annual Catch Entitlements (ACE) for 17 sectors in the NE multispecies fishery. In addition to several universal exemptions approved in the final rule for Amendment 16 the NE Multispecies Fisheries Management Plan (FMP), the final sector rule also approved several additional exemptions from NE multispecies regulations for those sectors that requested them through their respective sector operations plans. The sectors requested several exemptions in the FY 2010 operations plans that NMFS subsequently disapproved for various reasons, including that they were not allowed as exemptions under Amendment 16, or that they were being addressed in the Amendment 16 proposed rule. Among these was a request to participate in the Gulf of Maine (GOM) Haddock Sink Gillnet Pilot Program, a program proposed in Amendment 16 that would have allowed the seasonal use of 6-inch (15.24-cm) mesh gillnets in the GOM Regulated Mesh Area (RMA) to target haddock. The GOM Sink Gillnet Pilot Program was subsequently disapproved by NMFS in Amendment 16. NMFS has undertaken this action to consider an exemption functionally equivalent to the GOM Haddock Sink Gillnet Pilot Program for all FY 2010 sectors. NMFS is also considering granting an exemption that would allow the discarding of unmarketable fish at sea.

**DATES:** Written comments must be received on or before September 17, 2010.

**ADDRESSES:** You may submit comments, identified by 0648–XX84, by any one of the following methods:

- *Electronic Submissions:* Submit all electronic public comments via the Federal eRulemaking Portal: *http://www.regulations.gov.*
- *Fax:* (978) 281–9135, Attn: Melissa Vasquez.
- *Mail:* Paper, disk, or CD–ROM comments should be sent to Patricia A. Kurkul, Regional Administrator, National Marine Fisheries Service, 55 Great Republic Drive, Gloucester, MA 01930. Mark the outside of the envelope: "Comments on 2010 Sector Exemption Rule."

*Instructions:* All comments received are part of the public record and will generally be posted to *http://www.regulations.gov* without change. No comments will be posted for public viewing until after the comment period has closed. All Personal Identifying Information (for example, name, address, etc.) voluntarily submitted by the commenter may be publicly accessible. Do not submit Confidential Business Information or otherwise sensitive or protected information. NMFS will accept anonymous comments (enter N/A in the required fields, if you wish to remain anonymous). You may submit attachments to electronic comments in Microsoft Word, Excel, WordPerfect, or Adobe PDF file formats only.

Copies of requests for addenda to the FY 2010 sector operations plans and contracts, and the supplemental environmental assessment (EA), are available from the NMFS NE Regional Office at the mailing address specified above. An Initial Regulatory Flexibility Analysis (IRFA) was prepared for this proposed rule and is comprised of the EA, the preamble, and the Classification sections of the proposed rule.

**FOR FURTHER INFORMATION CONTACT:** Melissa Vasquez, Fishery Policy Analyst, phone (978) 281–9166, fax (978) 281–9135.

**SUPPLEMENTARY INFORMATION:** This action proposes to implement addenda to FY 2010 NE multispecies sector operations plans and contracts that would add certain exemptions from Federal fishing regulations for FY 2010 sectors. The Administrator, NE Region, NMFS (Regional Administrator), has made a preliminary determination that the addenda to the 17 approved FY 2010 sector operations plans and contracts are consistent with the goals of the FMP as described in Amendment 16, and other applicable laws, and are in compliance with the regulations that govern NE multispecies sector allocation management as specified in 50 CFR 648.87.

### Background

A final rule published April 9, 2010 (75 FR 18113), approved FY 2010 sector operations plans and contracts and allocations of ACE for 17 NE multispecies sectors. The Amendment 16 regulations governing the development of sector operations plans and contracts allow for a sector to request exemptions from Federal fishing regulations through the sector operations plan and contract submitted to NMFS for approval on an annual or bi-annual basis (§ 648.87(b)(2)(xv)). Pursuant to § 648.87(c)(2), the Regional Administrator may exempt vessels participating in a sector from certain Federal fishing regulations, in addition to the Amendment 16 universal exemptions already approved for all sectors. Regulations prohibit sectors from requesting exemptions that involve NE multispecies year-round closure areas, permitting restrictions (*e.g.,* vessel upgrades, etc.), gear restrictions designed to minimize habitat impacts (*e.g.,* roller gear restrictions, etc.), and reporting requirements (not including days-at-sea (DAS) reporting requirements or Special Access Program (SAP)-specific reporting requirements). For FY 2010, the final rule implementing FY 2010 sectors approved several new exemptions from NE multispecies regulations for those sectors that requested them through their sector operations plans. Specifically, certain sectors received exemptions from the following measures: (1) 120-day blockout of the fishery required for Day gillnet vessels; (2) 20-day spawning blockout of the fishery required for all vessels; (3) limitation on the number of gillnets imposed on Day gillnet vessels; (4) prohibition on a vessel hauling another vessel's gillnet gear; (5) limitation on the number of gillnets that may be hauled on Georges Bank (GB) when fishing under a groundfish/monkfish DAS; (6) limits on the number of hooks that may be fished; and (7) DAS Leasing Program length and horsepower restrictions.

The sectors also requested several exemptions in the FY 2010 operations plans that NMFS subsequently disapproved, because they are prohibited from being requested or because similar exemption requests

were being addressed in the Amendment 16 proposed rule. Among these was a request by the Sustainable Harvest Sector to participate in the GOM Haddock Sink Gillnet Pilot Program, a program proposed in Amendment 16 that would have allowed the seasonal use of 6-inch (15.24-cm) mesh gillnets in the GOM RMA (as opposed to the current 6.5-inch (16.51-cm) mesh requirement) for the purposes of targeting GOM haddock.

Upon initial review of the FY 2010 sector operations plans and contracts, NMFS requested that sectors remove exemption requests that repeated measures already proposed under Amendment 16, including the GOM Haddock Sink Gillnet Pilot Program. The Pilot Program was subsequently disapproved by NMFS in Amendment 16 because of concern that it could increase catch of overfished stocks, such as cod, and therefore undermine the rebuilding programs for these stocks.

In comments on the proposed FY 2010 sector rule, the Sustainable Harvest Sector, the New England Fishery Management Council (Council), and 14 other commenters asked what actions NMFS was considering for exemption requests such as the pilot program that were removed from sector operations plans to reduce duplication with Amendment 16, but which were subsequently disapproved. NMFS responded in a March 23, 2010, letter to the Council that it would work with sector managers regarding reconsideration of the pilot program for sectors in a separate rulemaking. At that time, NMFS noted it would also consider granting approved sector exemption requests to all FY 2010 sectors, if appropriate, through additional rulemaking. As a result, in April 2010, NMFS solicited requests from the approved FY 2010 sectors to determine if they would be interested in an exemption that would be functionally equivalent to the GOM Haddock Sink Gillnet Pilot Program, as well as any additional exemptions approved in the final sector rule which their sector had not previously requested. In response, all 17 sectors submitted requests for addenda to their operations plans and contracts to incorporate additional exemptions. Therefore, 17 addenda to the approved FY 2010 sector operations plans and contracts, and the additional exemptions requested therein, are being proposed for implementation in this proposed rule.

Among the exemptions being proposed is a partial exemption from the requirement to retain and land all legal-sized fish of the 14 stocks allocated to sectors. Recently, NMFS has received correspondence from members of industry and sector managers expressing concerns with the prohibition on discarding legal-sized fish of allocated stocks by sector vessels, specifically legal-sized unmarketable fish. Regulations at § 648.87 (b)(1)(v)(A) specifically prohibit sector vessels from discarding legal-sized regulated species allocated to sectors. This requirement applies to all fish or pieces of fish above the minimum size, including fish that may be considered unmarketable, as well as carcasses. Sector members and managers have stated that the need to separate the unmarketable fish from the food-grade product within limited deck and storage space has created operational difficulties and potential safety hazards at sea. Although this problem was raised to the Council during the development of Amendment 16, no exceptions to this requirement were considered or recommended.

To address this concern, this action proposes a partial exemption in each sector operations plan from the prohibition on discarding of legal-sized unmarketable fish of allocated stocks, provided that the legal-sized unmarketable fish are accounted for in the discard rate, as determined through observer coverage, similar to how other allowable discards are accounted for. For the purposes of this exemption, unmarketable fish is defined as any legal-sized fish the vessel owner/captain elects not to retain, because of condition or marketability problems.

**Proposed Exemptions**

The final rule approving FY 2010 sector operations plans and contracts granted additional exemptions only to the sectors that originally requested those exemptions. NMFS is proposing expanding these previously approved sector-specific exemptions to those additional sectors that have requested them through addenda to their FY 2010 sector operations plans and contracts. Of the 17 sectors that requested additional exemptions, 13 sectors requested all of the approved FY 2010 sector exemptions which they had not previously requested, 2 sectors requested 3 additional exemptions, 1 sector requested 2 additional exemptions, and 1 sector requested only one additional exemption (Table 1). One sector also requested 4 new exemptions that had not been previously approved for FY 2010 sectors. Those new exemptions are not being proposed in this action, because it was determined that adding these exemptions to the list of alternatives could result in implementation delays that would reduce the efficacy of this action for FY 2010 sectors. However, sectors will be able to propose these and other new exemptions in their operations plans for FY 2011.

| Exemption | NEFS-II | NEFS-III | NEFS-IV * | NEFS-V | NEFS-VI | NEFS-VII | NEFS-VIII | NEFS-IX | NEFS-X | NEFS-XI | NEFS-XII | NEFS-XIII | GB Cod Fixed Gear | Sustainable Harvest | Port Clyde | Tri-State | Northeast Coastal Communities |
|---|---|---|---|---|---|---|---|---|---|---|---|---|---|---|---|---|---|
| GOM Sink Gillnet | | | | | | | | | | | | | | | | | |
| Discarding | | | | | | | | | | | | | | | | | |
| 120-day gillnet block | | | | | | | | | | | | | | | | | |
| 20-day spawning block | | | | | | | | | | | | | | | | | |
| Gillnet limit | | | | | | | | | | | | | | | | | |
| Community fixed gear | | | | | | | | | | | | | | | | | |
| 50-net limit with DAS | | | | | | | | | | | | | | | | | |
| Limit on # of hooks | | | | | | | | | | | | | | | | | |
| DAS leasing size and HP restrictions | | | | | | | | | | | | | | | | | |

Grey = New Exemption Request
Black = Previously Requested and Approved Exemption
White = Not requested
NEFS = Northeast Fishery Sector
* NEFS-IV is a lease only sector and their ACE is fished under the operations plans of other sectors

Table 1. Exemptions Granted to and Requested by FY 2010 Sectors

The following are the previously approved exemptions expanded to additional sectors, as well as new exemptions proposed in this rule:

*1. GOM Haddock Sink Gillnet Exemption (Newly Proposed for Sectors)*

This exemption is functionally equivalent to a pilot program that was proposed by the Council in Amendment 16 to allow vessels to potentially catch more haddock seasonally in the GOM. The regulations currently require a minimum mesh size of 6.5-in (16.51-cm) for gillnets in the GOM RMA (§ 648.80(a)(3)(iv)). Minimum mesh size requirements have been used, along with other management measures, to reduce overall mortality on groundfish stocks, as well as to reduce discarding and improve survival of sub-legal groundfish. This exemption would allow FY 2010 sector vessels to use 6-inch (15.24-cm) mesh stand-up gillnets in the GOM RMA from January 1, 2011 to April 30, 2011, when fishing for haddock. The designation of this season is consistent with the original pilot program proposal and is the time period when haddock are most available in the GOM. Sector vessels utilizing this exemption would be prohibited from using tie-down gillnets during this period. The GOM Haddock Sink Gillnet Program, as proposed by the Council, included the provision that Day gillnet vessels would not be able to fish with, possess, haul, or deploy more than 30 nets per trip. Consistent with the original scope of the pilot program, NMFS is proposing that Day gillnet vessels utilizing this exemption also be limited to 30 nets per trip during this period. However, to maximize the flexibility for sector vessels fishing under this exemption, as well as the general utility of this exemption, NMFS is requesting public comment on a net limit between 30 and 150 stand-up nets for Day gillnet vessels utilizing the GOM Sink Gillnet Exemption. NMFS has analyzed the impacts of Day gillnet vessels using up to 150 nets, the most expansive number, in the supplemental EA prepared for this action. Day gillnet vessels participating in sectors granted the exemption from Day gillnet net limits, are exempt from the general net limit in the GOM RMA, and would be able to fish up to 150 nets in the GOM RMA when not participating in this program. The Letter of Authorization (LOA) issued to the sector vessels that qualify for this exemption will specify the net restrictions to help ensure the provision is enforceable. There would be no limit on the number of nets that participating Trip gillnet vessels would be able to fish with, possess, haul, or deploy, during this period, because Trip gillnet vessels are required to remove all gillnet gear from the water before returning to port at the end of a fishing trip.

This exemption would provide sector vessels the opportunity to potentially catch more haddock in the GOM, a fully rebuilt stock. Recent gillnet selectivity studies, explained in the Amendment 16 Final Environmental Impact Statement (FEIS), indicate that 6.5-inch (16.51 cm) sink gillnets retain few haddock and that 6-inch (15.24 cm) mesh gillnets might improve the ability for gillnets to better target haddock. However, the Amendment 16 FEIS also noted that gillnets are effective at catching cod and pollock and that, if the catch rates of these species were to be maintained or increased under the pilot program, mortality on these stocks could increase. NMFS disapproved the GOM Haddock Sink Gillnet Pilot Program in the final rule implementing Amendment 16 because of its potential to increase catch and fishing mortality of GOM cod and pollock, two stocks that, at the time, both required reductions in mortality under established rebuilding programs, without substantially increasing the catch of haddock. Recently, new scientific information has indicated that pollock is not overfished, overfishing is not occurring, and the stock is rebuilt. NMFS believes that impacts to allocated target stocks, like GOM cod, resulting from this exemption would be expected to be negligible, because fishing mortality by sector vessels is restricted by an ACE for allocated stocks, which caps overall mortality. This exemption may increase revenues for sectors fishing with gillnet gear, by allowing a greater catch of haddock to be retained, thus increasing efficiency and revenue in the fishery.

A comment by the Conservation Law Foundation on the Amendment 16 proposed rule expressed concern that the original GOM Haddock Sink Gillnet Pilot Program could impact Atlantic wolffish, which migrate through the proposed program area. The 2008 report of the Northeast Data Poor Stocks Working Group Meeting noted only a weak indication of seasonal migration by wolffish in the GOM as they move from shallow to deep water in autumn and then deep to shallow water in spring. It may be that smaller mesh gillnets would increase or decrease catch of wolffish during January through April; however, there is little information at this time that would support either conclusion. Furthermore, bycatch of wolffish and other non-allocated stocks when fishing under this exemption would be tied to effort on allocated stocks, which would be limited overall by the sector's ACE. NMFS will monitor the level of bycatch of groundfish to determine whether it is a problem under this exemption.

It is possible that a higher net limit for Day gillnet vessels participating in this program could result in an increase in the number of gillnets in the water at one time and therefore potentially increase interactions with protected species. However, if additional nets result in greater efficiency, then it is also possible that an increase in nets could decrease the overall number of soak hours throughout the year, thus potentially reducing interactions with protected species. Sector vessels utilizing this exemption would still be required to comply with all requirements of the Harbor Porpoise Take Reduction Plan and Atlantic Large Whale Take Reduction Plan. The GOM Haddock Sink Gillnet exemption has been requested by Northeast Fishery Sectors II and III, V–VIII, and X–XII, the Sustainable Harvest Sector, the Port Clyde Community Groundfish Sector, the GB Cod Fixed Gear Sector and the Tri-State Sector.

*2. Discarding Exemption*

The regulations prohibit sector vessels from discarding any of the 14 legal-sized regulated species allocated to sectors (§ 648.87(b)(1)(v)(A)). Amendment 16 implemented this provision to ensure that the sector's ACE is accurately monitored. Members of industry have requested a partial exemption from this requirement with respect to unmarketable fish, because of concerns that retaining and landing large amounts of unmarketable fish and carcasses is creating operational difficulties and unsafe working conditions for sector vessels at sea. Available data from the Northeast Fishery Observer Program (NEFOP) for sector trips monitored during the first three months of FY 2010 indicate that sector vessels may land as much as 1,000 lb (453.59 kg) of damaged fish and carcasses on a given trip. To comply with this requirement, sector vessels have had to store this unmarketable fish on the vessel, in some cases in totes on deck, creating unsafe work conditions. Anecdotal information suggests that fish dealers typically dispose of unmarketable fish for sector vessels as a courtesy. However, there is currently little data available to indicate the scope of this occurrence among dealers, and any other methods of disposal used by sector vessels.

The Regional Administrator is proposing a partial exemption from the requirement to retain all legal-sized fish for FY 2010 sectors that would allow sector vessels to discard these fish under the condition that legal-sized unmarketable allocated fish are accounted for in the overall sector-specific discard rates in the same way discards of undersized fish are currently accounted for, through observer or at-sea monitoring coverage. This exemption would enhance operational flexibility and safer working conditions to sector vessels. In addition, this exemption would relieve the burden on sector vessels and their dealers from having to dispose of the unmarketable fish upon landing. The determination of what fish should be discarded under this exemption would be at the discretion of the vessel operator. There would be an incentive for vessel operators to retain and market as much of their catch of allocated stocks as possible to maximize the value of the sector's ACE, because discarded fish would still count against the sector's ACE without any financial benefit. Thus, it is unlikely that this exemption would lead to more discards, but would provide that flexibility to sector vessels. This exemption would be expected to result in negligible impacts to allocated species and non-allocated species and bycatch, because discarded fish are already deceased. Impacts to protected resources and the physical environment would also be expected to be negligible, because overall effort by sectors is limited by an ACE. Implementation of this exemption for all sectors may increase safety at sea, and may increase the expected profit margins of fishermen by eliminating any costs associated with disposal of the unmarketable fish, thereby resulting in a low positive impact on sector participants and ports. This exemption is proposed for 16 sectors: Sustainable Harvest Sector, the Tri-State Sector, the GB Cod Fixed Gear Sector, the Port Clyde Community Groundfish Sector, the Northeast Coastal Communities Sector, and Northeast Fishery Sectors II and III, and V–XIII.

*3. 120-Day Block Requirement Out of the Fishery for Day Gillnet Vessels*

The 120-day block requirement out of the fishery for Day gillnet vessels was implemented in 1997 under Framework 20 (62 FR 15381, April 1, 1997) to help ensure that management measures for Day gillnet vessels were comparable to effort controls placed on other fishing gear types, given that gillnets continue to fish as long as they are in the water. Regulations at § 648.82(j)(1)(ii) require that each NE multispecies gillnet vessel declared into the Day gillnet category declare and take 120 days out of the non-exempt gillnet fishery. Each period of time taken must be a minimum of 7 consecutive days, and at least 21 of the 120 days must be taken between June 1

and September 30. An exemption to this requirement was previously approved for the following six sectors in the final rule approving FY 2010 sector operations plans and contracts: Northeast Fishery Sectors (NEFS) III and XI, the GB Bank Cod Fixed Gear Sector, the Sustainable Harvest Sector, the Tri-State Sector, and the Port Clyde Community Groundfish Sector. This action proposes that eight additional sectors would be exempted from this Day gillnet requirement through an operations plan addendum: Northeast Fishery Sectors II, V–VIII, X and XII, and the Tri-State Sector. This exemption was previously approved for the FY 2010 sectors that originally requested this based upon the rationale that this measure was designed to control fishing effort and, therefore, is no longer necessary for sectors because sectors are restricted to an ACE for each groundfish stock, which limits overall fishing mortality. Under this proposed rule, this exemption for all sectors would increase the operational flexibility of sector vessels and would be expected to increase profit margins of sector fishermen. For additional information on this exemption, please refer to the proposed and final sector rule (74 FR 68015 and 75 FR 18113), respectively.

*4. 20-Day Spawning Block*

Regulations at § 648.82(g) require vessels to declare out and be out of the NE multispecies DAS program for a 20-day period each calendar year between March 1 and May 31, when spawning is most prevalent in the GOM. This regulation was developed to reduce fishing effort on spawning groundfish stocks and was previously approved for FY 2010 sectors based upon the rationale that the sector's ACE will restrict fishing mortality, making this measure no longer necessary as an effort control. Exemption from this requirement would provide vessel owners with greater flexibility to plan operations according to fishing and market conditions. For additional information on this exemption, please refer to the proposed and final sector rule (74 FR 68015 and 75 FR 18113), respectively. This exemption was previously approved for the Sustainable Harvest Sector, the Tri-State Sector, and the Northeast Coastal Communities Sector. An additional 13 sectors would receive this exemption through this action: Northeast Fishery Sectors II and III, and V–XIII, the GB Cod Fixed Gear Sector, and the Port Clyde Community Groundfish Sector.

*5. Limitation on the Number of Gillnets for Day Gillnet Vessels*

Current gear restrictions in the groundfish RMAs restrict Day gillnet vessels from fishing more than: 100 gillnets (of which no more than 50 can be groundfish gillnets) in the GOM RMA (§ 648.80(a)(3)(iv)); 50 gillnets in the GB RMA (§ 648.80(a)(4)(iv)); and 75 gillnets in the Mid-Atlantic (MA) RMA (§ 648.80(b)(2)(iv)). This exemption, as previously approved for the Sustainable Harvest Sector in the final sector rule for FY 2010, allows sector vessels to fish up to 150 nets (any combination of flatfish or groundfish nets) in each of the RMAs, and would provide greater operational flexibility to sector vessels in deploying gillnet gear. This exemption was previously approved because it is designed to control fishing effort and is no longer necessary for sector vessels, since each sector is restricted by an ACE for each stock, which caps overall fishing mortality. For additional information on this exemption, please refer to the proposed and final sector rule (74 FR 68015 and 75 FR 18113), respectively. Since publication of the final sector rule for FY 2010, this exemption has been requested by 12 additional sectors: The Port Clyde Community Groundfish Sector, the Tri-State Sector, the GB Cod Fixed Gear Sector, the Northeast Fishery Sectors II and III, V–VIII, and X–XII.

*6. Prohibition on a Vessel Hauling Another Vessel's Gillnet Gear*

Northeast Fishery Sectors III and XI received an exemption for FY 2010 from current regulations that prohibit one vessel from hauling another vessel's gillnet gear (§§ 648.14(k)(6)(ii)(A) and 648.84) in order to share fixed gear among sector vessels. This exemption was originally approved to allow sector vessels to reduce costs by pooling gillnet gear, and because it was determined that the regulations pertaining to hauling and setting responsibilities are no longer necessary when sectors are confined to an ACE for each stock. Consistent with the exemption as originally approved, the sectors requesting this exemption have proposed that all vessels utilizing community fixed gear be jointly liable for any violations associated with that gear. For additional information on this exemption, please refer to the proposed and final sector rule (74 FR 68015 and 75 FR 18113), respectively. This exemption is proposed for an 11 additional sectors: The Northeast Fishery Sectors II, V–VIII, X and XII, the Sustainable Harvest Sector, the Port Clyde Community Groundfish Sector, the GB Cod Fixed Gear Sector and the Tri-State Sector.

*7. Limitation on the Number of Gillnets That May Be Hauled on GB When Fishing Under a Groundfish/Monkfish DAS*

The GB Cod Fixed Gear Sector received an exemption for FY 2010 from the limit on the number of gillnets that may be hauled on GB when fishing under a groundfish/monkfish DAS. Current regulations at § 648.80(a)(4)(iv) prohibit Day gillnet vessels fishing on a groundfish DAS from possessing, deploying, fishing, or hauling more than 50 nets on GB. This exemption was previously approved, because it would allow nets deployed under existing net limits of the Monkfish FMP to be hauled more efficiently by vessels dually permitted under both FMPs. For additional information on this exemption, please refer to the proposed and final sector rule (74 FR 68015 and 75 FR 18113), respectively. This exemption is proposed for an additional 12 sectors for FY 2010: Northeast Fishery Sectors II and III, V–VIII, and X–XII, the Sustainable Harvest Sector, the Port Clyde Community Groundfish Sector, and the Tri-State Sector.

*8. Limitation on the Number of Hooks That May Be Fished*

The GB Cod Fixed Gear Sector was granted an exemption for FY 2010 from the number of hooks that a vessel may fish on a given fishing trip. Current regulations (§ 648.80) prohibit vessels from fishing or possessing more than 2,000 rigged hooks in the GOM RMA, more than 3,600 rigged hooks in the GB RMA, more than 2,000 rigged hooks in the Southern New England (SNE) RMA, or 4,500 rigged hooks in the MA RMA. This exemption was approved in the final sector rule for FY 2010 because it would allow sector vessels to more efficiently harvest ACE and is no longer a necessary control on effort by sector vessels. For additional information on this exemption, please refer to the proposed and final sector rule (74 FR 68015 and 75 FR 18113), respectively. This exemption has been granted to the GB Cod Hook Sector every year since 2004. This action proposes that an additional 13 sectors would be exempted from this requirement: the Northeast Fishery Sectors II and III, V–VIII, and X–XII, the Sustainable Harvest Sector, the Port Clyde Community Groundfish Sector, the Tri-State Sector, and the Northeast Coastal Communities Sector.

*9. Length and Horsepower Restrictions on DAS Leasing*

While sector vessels are exempt from the requirement to use NE multispecies DAS to harvest groundfish, sector vessels have been allocated and still need to use NE multispecies DAS for specific circumstances. For example, the Monkfish FMP includes a requirement that limited access monkfish Category C and D vessels harvesting more than the incidental monkfish catch must fish under both a monkfish and a groundfish DAS. Therefore, sector vessels may still use, and lease, NE multispecies DAS.

The Sustainable Harvest Sector and Tri-State Sector received an exemption from the DAS Leasing Program length and horsepower baseline restrictions on DAS leases between vessels within their individual sectors as well with vessels in other sectors with this exemption. Restricting sectors to their ACEs eliminates the need to use vessel characteristics to control fishing effort. Further, exemption from this restriction allows sector vessels greater flexibility in the utilization of ACE and DAS. Approving this exemption for additional sectors could increase the profitability of sector participants by expanding the pool of eligible lessors and lessees for any given vessel. Providing greater flexibility in the distribution of DAS could result in increased effort on non-allocated target stocks, such as monkfish and skates. However, sectors predicted little consolidation and redirection of effort in their FY 2010 operations plans. In addition, any potential redirection in effort would be restricted by the sector's ACE for each stock, as well as effort controls in other fisheries (*e.g.,* trip limits and DAS). For additional information on this exemption, please refer to the proposed and final sector rule (74 FR 68015 and 75 FR 18113), respectively. This proposed action would exempt the Northeast Fishery Sectors II–XIII, the GB Cod Fixed Gear Sector, and the Port Clyde Community Groundfish Sector from the requirements.

**Supplemental Environmental Assessment**

In accordance with the National Environmental Policy Act, one supplemental EA was prepared for the 17 operations plan addenda. The supplemental EA is tiered from the Environmental Impact Statement (EIS) for Amendment 16 and the 17 sector EAs prepared for the 17 sector operations plans and contracts approved for FY 2010. The supplemental EA for this action examines the biological, economic, and social impacts associated with the GOM Haddock Sink Gillnet Exemption. It also provides a cumulative effects analysis (CEA) that addresses the combined impact of the direct and indirect effects of all proposed exemptions if approved for all the FY 2010 sectors. For the purpose of this analysis, the supplemental EA assumes that all 17 sectors have requested and are proposed to be approved for all additional exemptions, because an individual sector approved for a given exemption could have access to unlimited allocation through ACE trading. The summary finding of the supplemental EA concludes that, operating under the proposed exemptions, the sectors would produce similar effects that have non-significant impacts. An analysis of aggregate sector impacts was also conducted. Visit *http://www.regulations.gov* to view the supplemental EA prepared for the 17 sector operations plan addenda that this rule would implement.

**Classification**

Pursuant to § 304(b)(1)(A) of the Magnuson-Stevens Fishery Conservation and Management Act (Magnuson-Stevens Act), the Assistant Administrator for Fisheries, NOAA, has determined that this proposed rule is consistent with the NE Multispecies FMP, other provisions of the Magnuson-Stevens Act, and other applicable law, subject to further consideration after public comment.

This proposed rule is exempt from review under Executive Order (E.O) 12866.

An initial regulatory flexibility analysis (IRFA), consisting of this section, the preamble of this proposed rule, and the supplemental EA prepared for this action, was prepared as required by § 603 of the Regulatory Flexibility Act (RFA). This IRFA describes the economic impact that the proposed rule, if adopted, would have on small entities. A description of the action, why it is being considered, and the legal basis for this action are contained in the preamble to this proposed rule and in Sections 1.0, 2.0, and 3.0 of the supplemental EA prepared for this action. A summary of the analysis follows.

**Economic Impacts of the Proposed Action on Regulated Small Entities Enrolled in a Sector**

This proposed action would affect regulated entities engaged in commercial fishing for groundfish that are enrolled in any one of the 17 sectors that are operating in FY 2010. Anyone with a valid limited access Federal permit under the NE Multispecies FMP is eligible to join a sector. The Small Business Administration (SBA) size standard for commercial fishing (NAICS code 114111) is $4 million in sales. Available data indicate that, based on 2005–2007 average conditions, median gross annual sales by commercial fishing vessels were just over $200,000, and no single fishing entity earned more than $2 million annually. Since available data are not adequate to identify affiliated vessels, each operating unit is considered a small entity for purposes of the RFA, and, therefore, there is no differential impact between small and large entities. As of April 30, 2010, a total of 762 of the 1,477 eligible permits are enrolled in sectors for FY 2010.

The EIS for Amendment 16 compares economic impacts of sector measures with non-sector measures, and analyzes costs and benefits of the universal exemptions. The proposed rule proposing approval of the FY 2010 sector operations plans and contracts (74 FR 68015, December 22, 2009) discussed the economic impacts of the additional exemptions requested by sectors. This proposed rule and the accompanying supplemental EA discuss the economic impacts of approving the GOM Sink Gillnet Exemption and the partial exemption from the prohibition on discarding, as well as expanding the additional exemptions approved for FY 2010 sectors. The exemptions considered in this proposed rule would provide additional economic flexibility to vessels already participating in NE multispecies sectors during FY 2010. All exemptions requested by the sectors are intended to provide positive social and economic effects to sector members and ports.

The GOM Haddock Sink Gillnet Exemption is being requested by Northeast Fishery Sectors II and III, V–VIII, and X–XII, the Sustainable Harvest Sector, the Port Clyde Community Groundfish Sector, the GB Cod Fixed Gear Sector, and the Tri-State Sector, which represent 616 permits. The exemption would allow the use of 6-inch (15.24 cm) mesh gillnets in the GOM RMA from January 1, 2011–April 30, 2011. This exemption would provide participating sector vessels an opportunity to potentially retain more GOM haddock, a healthy stock, and share in the benefits from the stock recovery. To utilize this exemption, it would be necessary for participating sector vessels to purchase 6-inch (15.24 cm) mesh gillnets. However, it would allow a greater catch of haddock, which may increase revenues for gillnet fishermen and the ports where they land their fish, particularly if participating

vessels are able to change fishing behavior to selectively target this stock and minimize catch of other allocated target stocks.

The Sustainable Harvest Sector, the Tri-State Sector, the GB Cod Fixed Gear Sector, the Port Clyde Community Groundfish Sector, the Northeast Coastal Communities Sector, and Northeast Fishery Sectors II and III, and V–XIII, representing 716 permits, are requesting exemption from the regulations that currently prohibit sector vessels from discarding any legal-sized regulated species allocated to sectors. Sector vessels have had to retain legal-sized unmarketable fish, which requires them to store this fish on the vessel while at sea, in some cases in large quantities in totes on deck, creating unsafe work conditions. In addition, sector vessels have had to determine a method of disposal of any unmarketable fish landed. Anecdotal information indicates that some fish dealers dispose of unmarketable fish for sector vessels as a courtesy; however, the scope of this occurrence and any operational costs incurred by the dealer or vessels is unknown. A partial exemption from this regulation that would allow sector vessels to discard unmarketable fish would provide sector vessels more operational flexibility and improve safety conditions at sea. It would also relieve the burden, if any, on sector vessels and their dealers to find a way to dispose of the unmarketable fish once landed.

Exemption from the Day gillnet 120-day block requirement out of the fishery is being requested by the Northeast Fishery Sectors II, V–VIII, X and XII, and the Tri-State Sector. Existing regulations require that vessels using gillnet gear remove all gear from the water for 120 days per year. Since the time out from fishing is up to the vessel owner to decide (with some restrictions), many affected vessel owners have purchased more than one vessel such that one may be used while the other is taking its 120-day block out of the groundfish fishery, to provide for sustained fishing income. Acquiring a second vessel adds the expense of outfitting another vessel with gear and maintaining that vessel. The exemption from the 120-day block would allow sector members to realize the cost savings associated with retiring the redundant vessel. Furthermore, this exemption would provide additional flexibility to sector vessels to maximize the utility of other sector-specific and universal exemptions, such as the exemption from the GB Seasonal Closure in May and portions of the GOM Rolling Closure Areas. Several of the FY 2010 sectors, representing 390 permits, are already utilizing this exemption and approving the requests by additional sectors for this exemption would extend this flexibility and potential economic benefits to an additional 245 permits.

The Northeast Fishery Sectors II, V–VIII, X and XII, the Sustainable Harvest Sector, the Port Clyde Community Groundfish Sector, the GB Cod Fixed Gear Sector and the Tri-State Sector are requesting exemption from the prohibition on a vessel hauling gear that was set by another vessel. The community fixed gear exemption would allow sector vessels in the Day gillnet category to effectively pool gillnet gear that may be hauled or set by sector members. This provision would reduce the total amount of gear that would have to be purchased and maintained by participating sector members resulting in some uncertain level of cost savings, along with a possible reduction in total gear fished. This exemption has already been approved for 120 permits in FY 2010 sectors and approving these additional requests would extend the exemption to an additional 496 permits.

The Northeast Fishery Sectors II and III, V–VIII, and X–XII, the Sustainable Harvest Sector, the Port Clyde Community Groundfish Sector, the Tri-State Sector, and the Northeast Coastal Communities Sector, representing an additional 540 permits, are requesting exemption from the number of hooks that may be fished. These exemptions would provide vessel owners in these additional sectors with the flexibility to adapt the number of hooks fished to existing fishing and market conditions. This exemption would also provide an opportunity to improve vessel profitability. The exemption from the number of hooks that may be fished has been granted to the GB Cod Hook Sector every year since 2004 and was granted to the GB Cod Fixed Gear Sector for FY 2010. Approving this exemption for these additional sectors would extend the potential economic benefits to more vessels in other sectors.

Northeast Fishery Sectors II and III, V–VIII, and X–XII, the Sustainable Harvest Sector, the Port Clyde Community Groundfish Sector, and the Tri-State Sector have requested to be exempt from the limitation on the number of gillnets that may be hauled on GB when fishing under a groundfish/monkfish DAS. Approving this exemption would increase operational flexibility for an additional 522 permits, providing an opportunity for a substantial portion of the fleet to improve vessel profitability.

Northeast Fishery Sectors II and III, and V–XIII, the GB Cod Fixed Gear Sector, and the Port Clyde Community Groundfish Sector, are requesting exemption from the required 20-day spawning block out of the fishery. Exemption from the 20-day spawning block would improve flexibility to match trip planning decisions to existing fishing and market conditions. Although vessel owners currently have the flexibility to schedule their 20-day block according to business needs and may use that opportunity to perform routine or scheduled maintenance, vessel owners may prefer to schedule these activities at other times of the year, or may have unexpected repairs. Removing this requirement may not have a significant impact, but would still provide vessel owners with greater opportunity to make more efficient use of their vessel. This exemption was previously approved for 3 sectors representing 153 permits. Approving these exemption requests would extend the exemption to an additional 563 permits.

The Port Clyde Community Groundfish Sector, the Tri-State Sector, the GB Cod Fixed Gear Sector, the Northeast Fishery Sectors II and III, V–VIII, and X–XII, are requesting an exemption from the limit on the number of nets (not to exceed 150) that may be deployed by Day gillnet vessels. This exemption would provide greater flexibility to deploy fishing gear by participating sector members according to operational and market needs. A total of 116 permits participating in FY 2010 sectors are already exempt from this requirement. The proposed action would extend this flexibility and potential economic benefits to an additional 500 permits.

The Port Clyde Community Groundfish Sector, the GB Cod Fixed Gear Sector, and Northeast Fishery Sectors II–XIII, request exemption from regulations that currently limit leasing of DAS to vessels within specified length and horsepower restrictions. Current restrictions create a system in which a small vessel may lease DAS from virtually any other vessel, but is limited in the number of vessels that small vessels may lease to. The opposite is true for larger vessels. Exemption from these restrictions would allow greater flexibility to lease DAS between vessels of different sizes and may be expected to expand the market of potential lessees for some vessels. The efficiency gains of this exemption as approved for the Tri-State Sector and the Sustainable Harvest Sector were limited because the exemption would only apply to leases between Tri-State

Sector and Sustainable Harvest Sector members, representing 135 permits. This proposed action would extend this exemption to an additional 609 permits, which would not only potentially increase efficiency for the additional sectors for which this exemption is approved, but also for members of the Tri-State and Sustainable Harvest Sectors by expanding the pool of potential lessees with this exemption. Since DAS would not be required while fishing for groundfish, the economic importance of this exemption would be associated with the need to use groundfish DAS when fishing in other fisheries, for example, monkfish.

**Economic Impacts of the Alternative to the Proposed Action**

Under the No Action alternative, one or more of the sectors' requests for operations plan addenda would be disapproved, which would result in sector vessels operating under the operations plans and exemptions as approved for the start of the 2010 FY in the final rule published April 9, 2010 (75 FR 18113). Under this scenario, sector vessels may experience the efficiency gains and economic benefits of sector participation and the exemptions for which they have already been approved, as described in the IRFA for the proposed rule proposing approval of FY 2010 sector operations and exemptions. However, sector vessels would not be provided the opportunity to benefit from the increase in the operational flexibility that may be gained from all the exemptions available to FY 2010 sectors and revenues would be expected to be lower than under the proposed action. Relative to the proposed action, it is more likely under the No Action alternative that the ports and fishing communities where sectors plan to land their fish would be negatively impacted.

Allowing sectors to propose either entirely new exemptions or variations of previously approved exemptions was considered. However, this alternative was considered unreasonable because these exemptions are discrete measures which, by their nature, do not lend themselves to alternate configurations, and allowing sectors to propose entirely new exemptions or changing already approved exemptions to the list of alternatives could result in implementation delays that would reduce the utility of this action for sectors in this fishing year (FY 2010). In addition, this action is intended to be a continuing part of a longer action implementing Amendment 16, Framework Adjustment 44 to the NE Multispecies FMP, and the final rule approving FY 2010 sector operations plans, in which other alternative measures have already been considered. The FY 2010 sectors will have an opportunity to propose any new or revised exemptions in their operations plans for FY 2011.

**Description of the Projected Reporting, Recordkeeping, and Other Compliance Requirements of the Proposed Rule**

This proposed rule contains no collection-of-information requirement subject to the

**Paperwork Reduction Act**

Regulations under the Magnuson-Stevens Fishery Conservation and Management Act require publication of this notification to provide interested parties the opportunity to comment on proposed sector operations plan addenda.

**Authority:** 16 U.S.C. 1801 *et seq.*

Dated: August 27, 2010.

**Samuel D. Rauch III,**

*Deputy Assistant Administrator For Regulatory Programs, National Marine Fisheries Service.*

[FR Doc. 2010–21996 Filed 9–1–10; 8:45 am]

BILLING CODE 3510–22–P

# Notices

Federal Register

Vol. 75, No. 170

Thursday, September 2, 2010

This section of the FEDERAL REGISTER contains documents other than rules or proposed rules that are applicable to the public. Notices of hearings and investigations, committee meetings, agency decisions and rulings, delegations of authority, filing of petitions and applications and agency statements of organization and functions are examples of documents appearing in this section.

## DEPARTMENT OF AGRICULTURE

### Forest Service

### Prince of Wales Resource Advisory Committee

**AGENCY:** Forest Service, USDA.

**ACTION:** Notice of meeting.

**SUMMARY:** The Prince of Wales Resource Advisory Committee will meet in Thorne Bay, Alaska, September 24, 2010. The purpose of this meeting is to discuss potential projects under the Secure Rural Schools and Community Self-Determination Act of 2008.

**DATES:** The meeting will be held September 24, 2010 from 9 a.m. to 4 p.m.

**ADDRESSES:** The meeting will be held at the Thorne Bay Ranger District, 1312 Federal Way, Thorne Bay, Alaska. Send written comments to Prince of Wales Resource Advisory Committee, c/o District Ranger, USDA Forest Service, PO Box 500, Craig, AK 99921, or electronically to Rebecca Sakraida, RAC Coordinator at *rsakraida@fs.fed.us*.

**FOR FURTHER INFORMATION CONTACT:** Rebecca Sakraida, RAC Coordinator, Craig Ranger District, Tongass National Forest, (907) 826–1601.

**SUPPLEMENTARY INFORMATION:** The meeting is open to the public. Committee discussion is limited to Forest Service staff and Committee members. However, public input opportunity will be provided and individuals will have the opportunity to address the Committee at that time.

**Gregory M. Killinger,**

*District Ranger.*

[FR Doc. 2010–21918 Filed 9–1–10; 8:45 am]

BILLING CODE 3410–11–P

## COMMISSION ON CIVIL RIGHTS

### Sunshine Act Notice

**AGENCY:** United States Commission on Civil Rights.

**ACTION:** Notice of meeting.

**DATE AND TIME:** Friday, September 10, 2010; 11:30 a.m. EDT.

**PLACE:** Via Teleconference, Public Dial In: 1–800–597–7623, Conference ID # 97796915.

**Meeting Agenda**

This meeting is open to the public, except where noted otherwise.

I. Approval of Agenda

II. Program Planning

- Consideration of Findings and Recommendations for Briefing Report on Health Care Disparities.
- New Black Panther Party Enforcement Project—Some of the discussion of this agenda item may be held in closed session.
- Sex Discrimination in Liberal Arts College Admissions Project—Some of the discussion of this agenda item may be held in closed session.
- Timeline for Briefing Report on English-Only in the Workplace.

III. State Advisory Committee Issues

- Arkansas SAC.
- Wyoming SAC.

IV. Approval of August 13 Meeting Minutes

V. Adjourn

**CONTACT PERSON FOR FURTHER INFORMATION:** Lenore Ostrowsky, Acting Chief, Public Affairs Unit (202) 376–8591. TDD: (202) 376–8116.

Persons with a disability requiring special services, such as an interpreter for the hearing impaired, should contact Pamela Dunston at least seven days prior to the meeting at 202–376–8105. TDD: (202) 376–8116.

Dated: August 31, 2010.

**David Blackwood,**

*General Counsel.*

[FR Doc. 2010–22112 Filed 8–31–10; 4:15 pm]

BILLING CODE 6335–01–P

## DEPARTMENT OF COMMERCE

### International Trade Administration

**[A–351–838, A–533–840, A–570–893, A–549–822, A–552–802]**

### Certain Frozen Warmwater Shrimp From Brazil, India, the People's Republic of China, Thailand, and the Socialist Republic of Vietnam: Notice of Amended Final Determinations of Sales at Less Than Fair Value Pursuant to Court Decision

**AGENCY:** Import Administration, International Trade Administration, Department of Commerce

**DATES:** September 2, 2010.

**SUMMARY:** On April 14, 2010, the United States Court of International Trade ("CIT") sustained the remand redetermination [1] issued by the Department of Commerce ("Department") pursuant to the CIT's remand order involving the antidumping duty investigations of certain frozen warmwater shrimp from Brazil, Ecuador, India, the People's Republic of China, Thailand, and the Socialist Republic of Vietnam.[2] In Ad Hoc IV, the CIT sustained the Department's finding that dusted shrimp should be included within the scope of these investigations. The Department is therefore now issuing amended final determinations that include dusted shrimp within the scope of the investigations.

**FOR FURTHER INFORMATION CONTACT:** Matthew Renkey, AD/CVD Operations, Office 9, Import Administration, International Trade Administration, U.S. Department of Commerce, 14th Street and Constitution Ave., NW., Washington, DC 20230; telephone: (202) 482–2312.

**SUPPLEMENTARY INFORMATION:** Ad Hoc IV arose out of the Department's final determinations [3] and amended final

[1] See Final Results of Redetermination Pursuant to Court Remand, Court No. 05–00192, (October 29, 2009) ("Final Redetermination"), found at *http://ia.ita.doc.gov/remands/09–69.pdf.*

[2] See Ad Hoc Shrimp Trade Action Committee, Versaggi Shrimp Corporation, and *Indian Ridge Shrimp Company* v. *United States,* Slip Op. 10–39 (CIT 2010) ("Ad Hoc IV").

[3] See Notice of Final Determination of Sales at Less Than Fair Value: Certain Frozen and Canned Warmwater Shrimp From Brazil, 69 FR 76910 (December 23, 2004) ("Brazil Final Determination"); Notice of Final Determination of Sales at Less Than

Continued

determinations[4] in the original investigations of certain frozen warmwater shrimp. In Ad Hoc Shrimp Trade Action Committee, Versaggi Shrimp Corporation, and Indian Ridge Shrimp Company v. United States, Consol. Court No. 05–00192 (July 1, 2009) ("Remand Opinion and Order"), the CIT remanded the issue of the Department's decision to exclude dusted shrimp from the scope of the antidumping duty investigations on certain frozen and canned warmwater shrimp.[5] In the Final Redetermination submitted in response to the Remand Opinion and Order, the Department found that dusted shrimp should be included within the scope of the investigations. On April 14, 2010, the CIT affirmed all aspects of the Department's remand redetermination. Ad Hoc IV represents a final and conclusive court decision. As noted in the Final Redetermination, it is unnecessary to recalculate any Notice of antidumping duty margins for these amended final determinations.[6]

We note that prior to Ad Hoc IV, the Department revoked the antidumping duty order with respect to Ecuador.[7] Thus, we are not including Ecuador in these amended final determinations pursuant to court order. Also prior to Ad Hoc IV, the Department revoked the antidumping duty order with respect to Thai I–Mei Frozen Foods Co., Ltd.[8] and the Rubicon Group[9] in Shrimp from Thailand. Subsequent to Ad Hoc IV but prior to these amended final determinations, the Department also revoked the antidumping duty order with respect to Devi Seafoods Ltd.[10] in Shrimp from India. Accordingly, we are not including these companies in these final determinations pursuant to court order.

## Amendment to the Final Determinations

As we now find that dusted shrimp is within the scope of the investigations, we have included revised scope language below. We note that the original shrimp investigations also included canned warmwater shrimp. However, given that the U.S. International Trade Commission ("ITC") failed to find injury with respect to canned warmwater shrimp and that the subsequent Shrimp AD Amended Finals and Orders did not include canned warmwater shrimp, we are similarly not including any reference to canned warmwater shrimp in the revised scope language. While the Department finds that dusted shrimp are no longer excluded from the scope of the investigations, it has retained the five-step definition of the dusting process, as dusting is a necessary precursor for producing battered shrimp, which remain outside the scope.

## Scope of the Investigations

The scope of these investigations includes certain warmwater shrimp and prawns, whether frozen, wild-caught (ocean harvested) or farm-raised (produced by aquaculture), head-on or head-off, shell-on or peeled, tail-on or tail-off,[11] deveined or not deveined, cooked or raw, or otherwise processed in frozen form.

The frozen warmwater shrimp and prawn products included in the scope of these investigations, regardless of definitions in the Harmonized Tariff Schedule of the United States ("HTS"), are products which are processed from warmwater shrimp and prawns through freezing and which are sold in any count size.

The products described above maybe processed from any species of warmwater shrimp and prawns. Warmwater shrimp and prawns are generally classified in, but are not limited to, the Penaeidae family. Some examples of the farmed and wild-caught warmwater species include, but are not limited to, whiteleg shrimp (Penaeus vannemei), banana prawn (Penaeus merguiensis), fleshy prawn (Penaeus chinensis), giant river prawn (Macrobrachium rosenbergii), giant tiger prawn (Penaeus monodon), redspotted shrimp (Penaeus brasiliensis), southern brown shrimp (Penaeus subtilis), southern pink shrimp (Penaeus notialis), southern rough shrimp (Trachypenaeus curvirostris), southern white shrimp (Penaeus schmitti), blue shrimp (Penaeus stylirostris), western white shrimp (Penaeus occidentalis), and Indian white prawn (Penaeus indicus).

Frozen shrimp and prawns that are packed with marinade, spices or sauce are included in the scope of these investigations. In addition, food preparations (including dusted shrimp), which are not "prepared meals," that

Fair Value: Certain Frozen and Canned Warmwater Shrimp From Ecuador, 69 FR 76913 (December 23, 2004) ("Ecuador Final Determination"); Notice of Final Determination of Sales at Less Than Fair Value and Negative Final Determination of Critical Circumstances: Certain Frozen and Canned Warmwater Shrimp From India, 69 FR 76916 (December 23, 2004) ("India FinaL Determination"); Notice of Final Determination of Sales at Less Than Fair Value: Certain Frozen and Canned Warmwater Shrimp From the People's Republic of China, 69 FR 70997 (December 8, 2004) ("China Final Determination"); Notice of Final Determination of Sales at Less Than Fair Value, Certain Frozen and Canned Warmwater Shrimp From Thailand, 69 FR 76918 (December 23, 2004) ("Thailand Final Determination"); Final Determination of Sales at Less Than Fair Value: Certain Frozen and Canned Warmwater Shrimp From the Socialist Republic of Vietnam, 69 FR 71005 (December 8, 2004) ("Vietnam Final Determination"); collectively the "Shrimp AD Final Determinations."

[4] See Notice of Amended Final Determination of Sales at Less Than Fair Value and Antidumping Duty Order: Certain Frozen Warm water Shrimp from Brazil, 70 FR 5143 (February 1, 2005) ("Brazil Amended Final Determination & Order"); Notice of Amended Final Determination of Sales at Less Than Fair Value and Antidumping Duty Order: Certain Frozen Warmwater Shrimp from Ecuador, 70 FR 5156 (February 1, 2005) ("Ecuador Amended Final Determination & Order"); Notice of Amended Final Determination of Sales at Less Than Fair Value and Antidumping Duty Order: Certain Frozen Warmwater Shrimp from India, 70 FR 5147 (February 1, 2005) ("India Amended Final Determination & Order"); Notice of Amended Final Determination of Sales at Less Than Fair Value and Antidumping Duty Order: Certain Frozen Warmwater Shrimp from the People's Republic of China, 70 FR 5149 (February 1, 2005) ("China Amended Final Determination & Order"); Notice of Amended Final Determination of Sales at Less Than Fair Value and Antidumping Duty Order: Certain Frozen Warmwater Shrimp from Thailand, 70 FR 5145 (February 1, 2005) ("Thailand Amended Final Determination & Order"); Notice of Amended Final Determination of Sales at Less Than Fair Value and Antidumping Duty Order: Certain Frozen Warmwater Shrimp from the Socialist Republic of Vietnam, 70 FR 5152 (February 1, 2005) ("Vietnam Amended Final Determination & Order"); collectively, the "Shrimp AD Amended Finals and Orders."

[5] See Remand Opinion and Order at 27.

[6] See Final Redetermination at 18, stating that across the investigations for all countries, only one respondent reported sales of dusted shrimp and that these sales had been inadvertently included in the antidumping duty calculation.

[7] See Implementation of the Findings of the WTO Panel in United States Antidumping Measure on Shrimp from Ecuador: Notice of Determination Under section 129 of the Uruguay Round Agreements Act and Revocation of the Antidumping Duly Order on Frozen Warmwater Shrimp from Ecuador, 72 FR 48257 (August 17, 2007).

[8] See Implementation of the Findings of the WTO Panel in United States—Antidumping Measure on Shrimp From Thailand: Notice of Determination Under Section 129 of the Uruguay Round Agreements Act and Partial Revocation of the Antidumping Duty Order on Frozen Warmwater Shrimp From Thailand, 74 FR 5638 (January 30 2009).

[9] See Certain Frozen Warmwater Shrimp From Thailand: Final Results of Antidumping Duty Changed Circumstances Review and Notice of Revocation in Part, 74 FR 52452 (October 13, 2009) (Shrimp from Thailand). The Rubicon Group consists of the following companies: Andaman Seafood Co., Ltd., Chanthaburi Frozen Food Co., Ltd., Chanthaburi Seafoods Co., Ltd., Intersia Foods Co., Ltd. (the successor in interest to Y2K Frozen Food Co., Ltd.), Phatthana Seafood Co., Ltd., S.C.C. Frozen Seafood Co., Ltd., Thailand Fishery Cold Storage Public Co., Ltd., Thai International Seafoods Co., Ltd., Wales & Co. Universe Limited, and Sea Wealth Frozen Food Co. Therefore, we have not listed any of the Rubicon Group companies in the amended final rates section below.

[10] See Certain Frozen Warmwater Shrimp From India: Final Results of Antidumnping Duly Administrative Review, Partial Rescission of Review, and Notice of Revocation of Order in Part, 75 FR 41813 (July 19, 2010) (Shrimp from India).

[11] "Tails" in this context means the tail fan, which includes the telson and the uropods.

contain more than 20 percent by weight of shrimp or prawn are also included in the scope of these investigations.

Excluded from the scope are: (1) Breaded shrimp and prawns (HTS subheading 1605.20.10.20); (2) shrimp and prawns generally classified in the Pandalidae family and commonly referred to as coldwater shrimp, in any state of processing; (3) fresh shrimp and prawns whether shell-on or peeled (HTS subheadings 0306.23.00.20 and 0306.23.00.40); (4) shrimp and prawns in prepared meals (HTS subheading 1605.20.05.10); (5) dried shrimp and prawns; (6) Lee Kum Kee's shrimp sauce;[12] (7) canned warmwater shrimp and prawns (HTS subheading 1605.20.10.40); and (8) certain battered shrimp. Battered shrimp is a shrimp-based product: (1) That is produced from fresh (or thawed-from-frozen) and peeled shrimp; (2) to which a "dusting" layer of rice or wheat flour of at least 95 percent purity has been applied; (3) with the entire surface of the shrimp flesh thoroughly and evenly coated with the flour; (4) with the nonshrimp content of the end product constituting between four and 10 percent of the product's total weight after being dusted, but prior to being frozen; and (5) that is subjected to individually quick frozen ("IQF") freezing immediately after application of the dusting layer. When dusted in accordance with the definition of dusting above, the battered shrimp product is also coated with a wet viscous layer containing egg and/or milk, and par-fried.

The products covered by these investigations are currently classified under the following HTS subheadings: 0306.13.00.03, 0306.13.00.06, 0306.13.00.09, 0306.13.00.12, 0306.13.00.15, 0306.13.00.18, 0306.13.00.21, 0306.13.00.24, 0306.13.00.27, 0306.13.00.40, 1605.20.10.10, and 1605.20.10.30. These HTS subheadings are provided for convenience and for customs purposes only and are not dispositive, but rather the written description of the scope of this investigation is dispositive.

**Continuation of Suspension of Liquidation**

Currently, liquidation is suspended and cash deposits are required for all entries of subject merchandise except for dusted shrimp. With respect to dusted shrimp, in accordance with section 735(c)(1)(B)(ii) of the Tariff Act of 1930, as amended ("the Act") and Ad Hoc IV, we will instruct U.S. Customs and Border Protection ("CBP") to require cash deposits or the posting of a bond equal to the estimated amount by which the normal value exceeds the U.S. price. Suspension of liquidation is ordered to begin effective the date of publication of these amended final determinations.

During the course of the original investigations, the Department only excluded dusted shrimp at the final determination. Thus, a portion of the original 180-day period for the provisional measures still applies to dusted shrimp (i.e., the difference between the date of the final determination and the date on which the provisional measures expired in the original investigation). Thus, for China and Vietnam, the Department will order CBP to suspend entries for 35 days starting the date of publication of these amended final determinations in the **Federal Register**. For Brazil, India and Thailand, the Department will order CBP to suspend entries for 39 days starting the date of publication of these amended final determinations in the **Federal Register**. Absent an affirmative injury determination by the ITC the Department will lift the suspension of liquidation at the end of this time period. The applicable rates for dusted shrimp are the rates calculated during the investigation of sales at less than fair value ("LTFV"), as outlined by the charts below.

| Manufacturer/exporter | Margin (percent) |
|---|---|
| Brazil: | |
| Maricultura Netuno S.A./Empresa de Armazenagem Frigorifica Ltda. | 7.94 |
| Cia. Exportadora de Produtos do Mar (Produmar)/Central de Industrialização e Distribuição de Alimentos Ltda. | 4.97 |
| Norte Pesca, S.A. | 67.80 |
| All Others | 7.05 |
| India: | |
| Hindustan Lever Ltd. | 15.36 |
| Nekkanti Seafoods Ltd. | 9.71 |
| All Others | 10.17 |
| Thailand: | |
| The Union Frozen Products Co., Ltd. | 5.34 |
| All Others | 5.34 |
| The People's Republic of China: | |
| Allied Pacific Group | 80.19 |
| Yelin Enterprise Co. Hong Kong[13] | 82.27 |
| Shantou Red Garden Foodstuff Co., Ltd. | 27.89 |
| Asian Seafoods (Zhanjiang) Co., Ltd. | 53.68 |
| Beihai Zhengwu Industry Co., Ltd. | 53.68 |
| Chaoyang Qiaofeng Group Co., Ltd. (Shantou Qiaofeng (Group) Co., Ltd.) (Shantou/Chaoyang Qiaofeng) | 53.68 |
| Chenghai Nichi Lan Food Co., Ltd. | 53.68 |
| Dalian Ftz Sea-Rich International Trading Co., Ltd. | 53.68 |
| Dongri Aquatic Products Freezing Plants | 53.68 |
| Fuqing Dongwei Aquatic Products Industry Co., Ltd. | 53.68 |
| Gallant Ocean (Liangjiang) Co., Ltd. | 53.68 |
| Hainan Fruit Vegetable Food Allocation Co., Ltd. | 53.68 |
| Hainan Golden Spring Foods Co., Ltd./Hainan Brich Aquatic Products Co., Ltd. | 53.68 |
| Jinfu Trading Co., Ltd. | 53.68 |
| Kaifeng Ocean Sky Industry Co., Ltd. | 53.68 |
| Leizhou Zhulian Frozen Food Co., Ltd. | 53.68 |
| Pingyang Xinye Aquatic Products Co., Ltd. | 53.68 |
| Savvy Seafood Inc. | 53.68 |

[12] The specific exclusion for Lee Kum Kee's shrimp sauce applies only to the scope in the PRC case.

| Manufacturer/exporter | Margin (percent) |
|---|---|
| Shanghai Taoen International Trading Co., Ltd. | 53.68 |
| Shantou Wanya Food Factory Co., Ltd. | 53.68 |
| Shantou Jinyuan District Mingfeng Quick-Frozen Factory | 53.68 |
| Shantou Long Feng Foodstuffs Co., Ltd. (Shantou Longfeng Foodstuffs Co., Ltd.) | 53.68 |
| Shantou Ocean Freezing Industry and Trade General Corporation | 53.68 |
| Shantou Shengping Oceanstar Business Co., Ltd. | 53.68 |
| Shantou Yuexing Enterprise Company | 53.68 |
| Shantou Ruiyuan Industry Co., Ltd. | 53.68 |
| Shantou Freezing Aquatic Product Food Stuffs Co. | 53.68 |
| Shantou Jinhang Aquatic Industry Co., Ltd. | 53.68 |
| Xuwen Hailang Breeding Co., Ltd. | 53.68 |
| Yantai Wei-Cheng Food Co., Ltd. | 53.68 |
| Zhangjiang Bobogo Ocean Co., Ltd. | 53.68 |
| Zhangjiang Newpro Food Co., Ltd. | 53.68 |
| Zhanjiang Go-Harvest Aquatic Products Co., Ltd. | 53.68 |
| Zhanjiang Runhai Foods Co., Ltd. | 53.68 |
| Zhanjiang Evergreen Aquatic Product Science and Technology Co., Ltd. | 53.68 |
| Zhanjiang Universal Seafood Corp. | 53.68 |
| Zhejiang Cereals, Oils & Foodstuff Import & Export Co., Ltd. | 53.68 |
| Zhoushan Xifeng Aquatic Co., Ltd. | 53.68 |
| Zhoushan Huading Seafood Co., Ltd. | 53.68 |
| Zhoushan Cereals Oils and Foodstuffs Import and Export Co., Ltd. | 53.68 |
| Zhoushan Lizhou Fishery Co., Ltd. | 53.68 |
| Zhoushan Diciyuan Aquatic Products Co., Ltd. | 53.68 |
| PRC-Wide Rate | 112.81 |
| Vietnam: [14] | |
| Camau Frozen Seafood Processing Import Export Corporation[15] | 55.24 |
| Kim Anh Company Limited [16] | 25.76 |
| Minh Phu Seafood Corporation [17] | 74.38 |
| Minh Hai Joint Stock Seafoods Processing Company[18] | 84.30 |
| Amanda Foods (Vietnam) Ltd.[19] | 4.57 |
| Aquatic Products Trading Company [20] | 4.57 |
| Bac Lieu Fisheries Company Limited [21] | 4.57 |
| Coastal Fisheries Development Corporation [22] | 4.57 |
| Cai Doi Vam Seafood Import-Export Company [23] | 4.57 |
| Cam Ranh Seafoods Processing Enterprise Company [24] | 4.57 |
| Can Tho Agriculture and Animal Products Import Export Company [25] | 4.57 |
| Cantho Animal Fisheries Product Processing Export Enterprise [26] | 4.57 |
| Vietnam-Wide Rate | 25.76 |

## International Trade Commission Notification

As the CIT in Ad Hoc IV has upheld our finding that dusted shrimp should be within the scope of the investigations, we have notified the ITC of our amended final determinations of sales at LTFV. If the ITC determines that material injury or threat of material injury does not exist, the proceeding will be terminated, and all securities posted will be refunded or canceled, with regard to dusted shrimp. If the ITC determines that such injury does exist, the Department will issue an antidumping duty order directing CBP to assess, upon further instruction by the Department, antidumping duties on all imports of the subject merchandise entered, or withdrawn from warehouse, for consumption on or after the effective date of the suspension of liquidation.

We are issuing and publishing these amended final determinations of sales at less than fair value and notice in accordance with sections 516A(a)(B)(i) and 777(i) of the Act.

Dated: August 19, 2010.

**Ronald K. Lorentzen,**

*Deputy Assistant Secretary for Import Administration.*

[FR Doc. 2010–21555 Filed 9–1–10; 8:45 am]

**BILLING CODE 3510–DS–M**

[13] The Department has determined that Hilltop International is the successor-in-interest to Yelin Enterprise Co. Hong Kong. See Certain Frozen Warmwater Shrimp from the People's Republic of China: Notice of Final Results of Changed Circumstances Review, 72 FR 33447 (June 18, 2007).

[14] The Department has determined that Bac Lieu Fisheries Joint Stock Company ("Bac Lieu JSC"), Cadovimex Seafood Import-Export and Processing Joint Stock Company ("Cadovimex Vietnam"), Soc Trang Seafood Joint Stock Company ("STAPIMEX JSC"), Thuan Phuoc Seafoods and Trading Corporation ("Thuan Phuoc JSC"), and UTXI Aquatic Products Processing Corporation ("UTXI Corp.") are successors-in-interest, respectively, to Bac Lieu Fisheries Company Limited ("Bac Lieu Limited"), Cai Doi Vam Seafood Import-Export Company ("Cadovimex"), Soc Trang Aquatic Products and General Import Export Company ("STAPIMEX"), Thuan Phuoc Seafoods and Trading Corporation ("Thuan Phuoc SOE"), and UTXI Aquatic Products Processing Company ("UTXI"). See Frozen Warmwater Shrimp from Vietnam. Notice of Final Results of Antidumping Duty Changed Circumstances Reviews, 74 FR 42050 (August 20, 2009).

[15] Also known as Camimex and Camau Seafood Factory No. 4.

[16] Not a separate rate.

[17] Also known as Minh Phu Seafood Export-Import Corporation, Minh Phu, Minh Phu Seafood Pte., Minh Qui Seafood Co. Ltd., Minh Qui, Minh Phat Seafood Co. Ltd. and Minh Phat.

[18] Also known as Seaprodex Minh Hai.

[19] Also known as Amanda VN and Amanda.

[20] Also known as APT and A.P.T. Co.

[21] Also known as Bac Lieu, BACLIEUFIS, Bac Lieu Fis, Bac Lieu Fisheries Co. Ltd., Bac Lieu Fisheries Limited Company and Bac Lieu Fisheries Company Ltd.

[22] Also known as COFIDEC.

[23] Also known as Cadovimex.

[24] Also known as Cam Ranh.

[25] Also known as Cataco, Duyen Hai Foodstuffs Processing Factory, Caseafood, Coseafex and Cantho Seafood Export.

[26] Also known as Cafatex, Cafatex Vietnam, Xi Nghiep Che Bien Thuy Suc San Xuat Khau Can Tho, CAS, CAS Branch, Cafatex Saigon, Cafatex Fishery Joint Stock Corporation, Cafatex Corporation and Taydo Seafood Enterprise.

## DEPARTMENT OF COMMERCE

### National Oceanic and Atmospheric Administration

**RIN 0648–XY63**

### Fisheries of the Gulf of Mexico; Southeast Data, Assessment, and Review (SEDAR) Update; Greater Amberjack

**AGENCY:** National Marine Fisheries Service (NMFS), National Oceanic and Atmospheric Administration (NOAA), Commerce.

**ACTION:** Notice of SEDAR Assessment Conference Call for Gulf of Mexico greater amberjack.

**SUMMARY:** The SEDAR update of the assessment of the Gulf of Mexico stock of greater amberjack will consist of a series of webinars. This assessment will update the stock assessment conducted under SEDAR 9. See **SUPPLEMENTARY INFORMATION**.

**DATES:** An Assessment conference call will occur on Thursday, September 16, 2010 from 3 p.m. to 5 p.m. (EDT). The established times may be adjusted as necessary to accommodate the timely completion of discussion relevant to the assessment process. Such adjustments may result in the meeting being extended from, or completed prior to the time established by this notice. See **SUPPLEMENTARY INFORMATION**.

**ADDRESSES:** The conference call may be attended by the public. Those interested in participating should contact Julie A. Neer at SEDAR (See **FOR FURTHER INFORMATION CONTACT**) to request access information.

**FOR FURTHER INFORMATION CONTACT:** Julie A. Neer, SEDAR Coordinator, 4055 Faber Place Drive, Suite 201, North Charleston, SC 29405; telephone: (843) 571–4366; email: *julie.neer@safmc.net*

**SUPPLEMENTARY INFORMATION:** The Gulf of Mexico, South Atlantic, and Caribbean Fishery Management Councils, in conjunction with NOAA Fisheries and the Atlantic and Gulf States Marine Fisheries Commissions have implemented the Southeast Data, Assessment and Review (SEDAR) process, a multi-step method for determining the status of fish stocks in the Southeast Region. A full benchmark assessment conducted under SEDAR includes three workshops: (1) Data Workshop, (2) Stock Assessment Workshop Process and (3) Review Workshop. The product of the Data Workshop is a data report which compiles and evaluates potential datasets and recommends which datasets are appropriate for assessment analyses. The product of the Stock Assessment Workshop is a stock assessment report which describes the fisheries, evaluates the status of the stock, estimates biological benchmarks, projects future population conditions, and recommends research and monitoring needs. The assessment is independently peer reviewed at the Review Workshop. The product of the Review Workshop is a Review Workshop Report documenting Panel opinions regarding the strengths and weaknesses of the stock assessment and input data. Participants for SEDAR Workshops are appointed by the Gulf of Mexico, South Atlantic, and Caribbean Fishery Management Councils and NOAA Fisheries Southeast Regional Office and Southeast Fisheries Science Center. Participants include data collectors and database managers; stock assessment scientists, biologists, and researchers; constituency representatives including fishermen, environmentalists, and NGO's; international experts; and staff of Councils, Commissions, and state and federal agencies.

SEDAR conducts updates of benchmark stock assessments previously conducted through the SEDAR program. Update assessments add additional data points to datasets incorporated in the original SEDAR benchmark assessment and run the benchmark assessment model to update population estimates.

The greater amberjack update assessment will update the SEDAR 9 benchmark of Gulf of Mexico greater amberjack. The update process consists of a series of webinars.

**Greater Amberjack Update Schedule:**

*September 16, 2010; 3 p.m. - 5 p.m.; SEDAR Update Conference Call*

Using updated datasets adopted during the Data Webinar, participants will employ assessment models used in SEDAR 9 to evaluate stock status, estimate population benchmarks and management criteria, and project future conditions. Participants will recommend the most appropriate methods and configurations for determining stock status and estimating population parameters.

Dated: August 27, 2010.

**Tracey L. Thompson,**

*Acting Director, Office of Sustainable Fisheries, National Marine Fisheries Service.*

[FR Doc. 2010–21862 Filed 9–1–10; 8:45 am]

BILLING CODE 3510–22–S

## DEPARTMENT OF COMMERCE

### National Oceanic and Atmospheric Administration

**RIN 0648–XY64**

### North Pacific Fishery Management Council; Public Meetings

**AGENCY:** National Marine Fisheries Service (NMFS), National Oceanic and Atmospheric Administration (NOAA), Commerce.

**ACTION:** Notice of public meetings.

**SUMMARY:** The North Pacific Fishery Management Council;s Gulf of Alaska (GOA) and Bering Sea/Aleutian Islands (BS/AI) Groundfish Plan Teams will meet in Seattle, WA.

**DATES:** The meetings will be held September 20–23, 2010. The meetings will begin at 9 a.m. on Monday, September 22, and continue through Thursday, September 23.

**ADDRESSES:** The meetings will be held at the Alaska Fisheries Science Center, 7600 Sand Point Way N.E., Building 4, Observer Training Room (GOA Plan Team) and Traynor Room (BS/AI Plan Team), Seattle, WA.

*Council address*: North Pacific Fishery Management Council, 605 W. 4th Ave., Suite 306, Anchorage, AK 99501–2252.

**FOR FURTHER INFORMATION CONTACT:** Jane DiCosimo or Diana Stram, North Pacific Fishery Management Council; telephone: (907) 271–2809.

**SUPPLEMENTARY INFORMATION:**

**Agenda:**

Principal business is to prepare and review the draft Economic Report, the draft Ecosystems Consideration Chapter, the draft stock assessments for some target-categories, and recommend preliminary groundfish catch specifications for 2012/13. The Agenda is subject to change, and the latest version will be posted at *http://www.alaskafisheries.noaa.gov/npfmc/*

Although non-emergency issues not contained in this agenda may come before this group for discussion, in accordance with the Magnuson-Stevens Fishery Conservation and Management Act (Magnuson-Stevens Act), those issues may not be the subject of formal action during these meetings. Actions will be restricted to those issues specifically identified in this notice and any issues arising after publication of this notice that require emergency action under Section 305(c) of the Magnuson-Stevens Act, provided the public has been notified of the Council's intent to take final action to address the emergency.

### Special Accommodations

These meetings are physically accessible to people with disabilities. Requests for sign language interpretation or other auxiliary aids should be directed to Gail Bendixen, (907) 271–2809, at least 5 working days prior to the meeting date.

Dated: August 27, 2010.

**Tracey L. Thompson,**

*Acting Director, Office of Sustainable Fisheries, National Marine Fisheries Service.*

[FR Doc. 2010–21865 Filed 9–1–10; 8:45 am]

**BILLING CODE 3510–22–S**

---

## DEPARTMENT OF COMMERCE

## National Oceanic and Atmospheric Administration

**RIN 0648–XY67**

## Mid-Atlantic Fishery Management Council; Public Meeting

**AGENCY:** National Marine Fisheries Service (NMFS), National Oceanic and Atmospheric Administration (NOAA), Commerce.

**ACTION:** Notice of a public meeting.

**SUMMARY:** The Mid-Atlantic Fishery Management Council's (MAFMC) Spiny Dogfish Monitoring Committee will hold a meeting.

**DATES:** The meeting will be held on Friday, September 24, 2010, from 10 a.m. to 4 p.m.

**ADDRESSES:** The meeting will be held at the Hilton Garden Inn Providence Airport/Warwick, One Thurber Street/ Jefferson Blvd., Warwick, RI 02886; telephone: (401) 734–9600.

*Council address*: Mid-Atlantic Fishery Management Council, 800 N. State Street, Suite 201, Dover, DE 19901; telephone: (302) 674–2331.

**FOR FURTHER INFORMATION CONTACT:** Christopher M. Moore, Ph.D., Executive Director, Mid-Atlantic Fishery Management Council, 800 N. State Street, Suite 201, Dover, DE 19901; telephone: (302) 674–2331, extension 255.

**SUPPLEMENTARY INFORMATION:** The purpose of the meeting will be to discuss quota recommendations and associated management measures for spiny dogfish for fishing years 2011–15.

Although non-emergency issues not contained in this agenda may come before this group for discussion, in accordance with the Magnuson-Stevens Fishery Conservation and Management Act (Magnuson-Stevens Act), those issues may not be the subject of formal action during this meeting. Actions will be restricted to those issues specifically identified in this notice and any issues arising after publication of this notice that require emergency action under Section 305(c) of the Magnuson-Stevens Act, provided the public has been notified of the MAFMC's intent to take final action to address the emergency.

### Special Accommodations

The meeting is physically accessible to people with disabilities. Requests for sign language interpretation or other auxiliary aids should be directed to M. Jan Saunders at the Mid-Atlantic Council Office, (302) 526–5251, at least 5 days prior to the meeting date.

Dated: August 27, 2010.

**Tracey L. Thompson,**

*Acting Director, Office of Sustainable Fisheries, National Marine Fisheries Service.*

[FR Doc. 2010–21881 Filed 9–1–10; 8:45 am]

**BILLING CODE 3510–22–S**

---

## DEPARTMENT OF COMMERCE

## National Oceanic and Atmospheric Administration

**RIN 0648–XY65**

## Gulf of Mexico Fishery Management Council; Public Meeting

**AGENCY:** National Marine Fisheries Service (NMFS), National Oceanic and Atmospheric Administration (NOAA), Commerce.

**ACTION:** Notice of a public meeting.

**SUMMARY:** The Gulf of Mexico Fishery Management Council will convene two meetings of the Annual Catch Limit/ Annual Catch Target Control Rule Working Group.

**DATES:** The first meeting will convene at 9 a.m. on Monday, September 20, 2010 and conclude by 3 p.m. and the second meeting will convene at 9 a.m. on Wednesday, October 6, 2010 and conclude by 12 p.m.

**ADDRESSES:** The first meeting will be held at the Gulf of Mexico Fishery Management Council, 2203 North Lois Avenue, Suite 1100, Tampa, FL 33607, (813) 348–1630. The second meeting will convene via webinar.

*Council address*: Gulf of Mexico Fishery Management Council, 2203 N. Lois Avenue, Suite 1100, Tampa, FL 33607.

**FOR FURTHER INFORMATION CONTACT:** Steven Atran, Population Dynamics Statistician; Gulf of Mexico Fishery Management Council; telephone: (813) 348–1630.

**SUPPLEMENTARY INFORMATION:** The Annual Catch Limit/Annual Catch Target Control Rule Working Group will review and further develop a draft control rule to be included in the Generic Annual Catch Limits/ Accountability Measures Amendment. The control rule will be used by the Council in setting a buffer that accounts for management uncertainty between acceptable biological catch and annual catch limit, or between annual catch limit and annual catch target. For fisheries that have the annual catch limit allocated into sectors, the control rule will determine the buffer for each sector individually.

Copies of the agenda and other related materials can be obtained by calling (813) 348–1630 or can be downloaded from the Council's ftp site, *ftp.gulfcouncil.org*. To get directly to the folder containing the meeting materials, enter the following:*http://ftp.gulfcouncil.org?user=anonymous*, and navigate to the folder named ACL-ACT Control Rule Working Group.

Although other non-emergency issues not on the agenda may come before the Annual Catch Limit/Annual Catch Target Control Rule Working Group for discussion, in accordance with the Magnuson-Stevens Fishery Conservation and Management Act, those issues may not be the subject of formal action during these meetings. Actions of the Annual Catch Limit/ Annual Catch Target Control Working Group will be restricted to those issues specifically identified in the agenda and any issues arising after publication of this notice that require emergency action under Section 305(c) of the Magnuson-Stevens Fishery Conservation and Management Act, provided the public has been notified of the Council's intent to take action to address the emergency.

### Special Accommodations

These meetings are physically accessible to people with disabilities. Requests for sign language interpretation or other auxiliary aids should be directed to Tina O'Hern at the Council (see **ADDRESSES**) at least 5 working days prior to the meeting.

Dated: August 30, 2010.

**Tracey L. Thompson,**

*Acting Director, Office of Sustainable Fisheries, National Marine Fisheries Service.*

[FR Doc. 2010–21906 Filed 9–1–10; 8:45 am]

**BILLING CODE 3510–22–S**

## DEPARTMENT OF COMMERCE

### National Oceanic and Atmospheric Administration

**RIN 0648–XX66**

### The National Saltwater Angler Registry Program; Designation of Exempted States for Anglers, Spear Fishers, and For-Hire Fishing Vessels

**AGENCY:** National Marine Fisheries Service (NMFS), National Oceanic and Atmospheric Administration (NOAA), Commerce.

**ACTION:** Notice.

**SUMMARY:** NMFS has designated the states of Alaska, Oregon, California, New York, Connecticut, Delaware, American Samoa and Commonwealth of the Northern Mariana Islands as exempted states for anglers, spear fishers and for-hire fishing vessels. NMFS has designated the states of Virginia and Massachusetts as exempted states for for-hire fishing vessels.

**DATES:** Effective on September 2, 2010.

**ADDRESSES:** Gordon C. Colvin, Fishery Biologist, NMFS ST–12453, 1315 East-West Highway, Silver Spring, MD 20910.

**FOR FURTHER INFORMATION CONTACT:** Gordon C. Colvin, Fishery Biologist; (301) 713–2367 x175; e-mail: *Gordon.Colvin@noaa.gov*

**SUPPLEMENTARY INFORMATION:** The final rule implementing the National Saltwater Angler Registry Program, 50 CFR subpart P, was published in the **Federal Register** on December 30, 2008. The final rule requires persons who are angling, spear fishing or operating a for-hire fishing vessel in the U.S. Exclusive Economic Zone or for anadromous species to register annually with NOAA, beginning January 1, 2009. However, persons who are licensed or registered by, or state residents who are not required to register or hold a license issued by, a state that is designated as an exempted state are not required to register with NOAA. The final rule sets forth the requirements for states to be designated as exempted states. Generally, exempted states must agree to provide to NMFS names, addresses, dates of birth and telephone numbers of the persons licensed or registered under a qualifying state license and/or registry program, or to provide catch and effort data from a qualifying regional survey of recreational fishing, and enter into a Memorandum of Agreement with NMFS to formalize the data reporting agreement.

NMFS has received proposals for providing license/registry and/or regional survey catch and effort data from the states listed below, has determined that the states' programs qualify for exempted state designation under the provisions of the final rule, and has entered into Memoranda of Agreement with each of the states. Therefore, pursuant to 50 CFR 600.1415(b)(3), notice is hereby given that the following states are designated as exempted states under 50 CFR subpart P: Alaska, Oregon, California, New York, Delaware, Connecticut, American Samoa, Commonwealth of the Northern Mariana Islands. Persons who hold a valid fishing license or registration issued by these exempted states for angling, spear fishing or operating a for-hire fishing vessel in tidal waters are not required to register with NOAA under 50 CFR 600.1405(b). Persons who are residents of these exempted states who are not required to hold a fishing license, or to be registered to fish under the laws of these exempted states, also are not required to register with NOAA. Further, pursuant to 50 CFR 600.1415(b)(3), notice is hereby given that the following states are designated as exempted states only for for-hire fishing vessels: Virginia, Massachusetts. Persons who hold a valid license or registration issued by these exempted states for operating a for-hire fishing vessel in tidal waters are not required to register with NOAA under 50 CFR 600.1405(b).

Dated: August 26, 2010.

**Eric C. Schwaab,**

*Assistant Administrator for Fisheries, National Marine Fisheries Service.*

[FR Doc. 2010–21987 Filed 9–1–10; 8:45 am]

**BILLING CODE 3510–22–S**

## DEPARTMENT OF COMMERCE

### International Trade Administration

**[A–549–821]**

### Polyethylene Retail Carrier Bags From Thailand: Preliminary Results of Antidumping Duty Administrative Review

**AGENCY:** Import Administration, International Trade Administration, Department of Commerce.

**SUMMARY:** In response to requests from interested parties, the Department of Commerce (the Department) is conducting an administrative review of the antidumping duty order on polyethylene retail carrier bags (PRCBs) from Thailand. The review covers five exporters/producers. The period of review (POR) is August 1, 2008, through July 31, 2009. We have preliminarily determined that sales have been made below normal value by companies subject to this review.

We invite interested parties to comment on these preliminary results. Parties who submit comments in this review are requested to submit with each argument (1) a statement of the issue and (2) a brief summary of the argument.

**DATES:** *Effective Date:* September 2, 2010.

**FOR FURTHER INFORMATION CONTACT:** Thomas Schauer or Richard Rimlinger, AD/CVD Operations, Office 5, Import Administration, International Trade Administration, U.S. Department of Commerce, 14th Street and Constitution Avenue, NW., Washington, DC 20230; telephone: (202) 482–0410 or (202) 482–4477, respectively.

**SUPPLEMENTARY INFORMATION:**

#### Background

On August 9, 2004, the Department published in the **Federal Register** the antidumping duty order on PRCBs from Thailand. See *Antidumping Duty Order: Polyethylene Retail Carrier Bags From Thailand,* 69 FR 48204 (August 9, 2004). On September 22, 2009, we published a notice of initiation of an administrative review of six companies. See *Initiation of Antidumping and Countervailing Duty Administrative Reviews and Request for Revocation in Part,* 74 FR 48224 (September 22, 2009).[1] Since initiation of the review, we selected Landblue and TPBI for individual examination. See Memorandum to Laurie Parkhill dated October 15, 2009. In addition, we extended the due date for completion of these preliminary results. See *Polyethylene Retail Carrier Bags from Thailand: Extension of Time Limit for Preliminary Results of Antidumping Duty Administrative Review, 75 FR 23673 (May 4, 2010),* and *Polyethylene Retail Carrier Bags From Thailand: Extension of Time Limit for Preliminary Results of Antidumping Duty Administrative Review,* 75 FR 36359 (June 25, 2010). Finally, we rescinded the review with respect to Landblue. See *Polyethylene Retail Carrier Bags from Thailand: Rescission of Antidumping Duty Administrative*

[1] We stated that the review covers the following companies: C.P. Packaging Co., Ltd., Giant Pack Co., Ltd., Landblue (Thailand) Co., Ltd. (Landblue), Sahachit Watana Plastics Ind. Co., Ltd., Thai Plastic Bags Industries Co., Ltd. (TPBI), and Thantawan Industry Public Co., Ltd. *Id.*, 74 FR at 48226. The Department has determined previously that TPBI, APEC Film Ltd., and Winner's Pack Co., Ltd., comprise the Thai Plastic Bags Group. See *Notice of Final Determination of Sales at Less than Fair Value: Polyethylene Retail Carrier Bags From Thailand,* 69 FR 34122, 34123 (June 18, 2004).

*Review in Part,* 75 FR 34699 (June 18, 2010).

The POR is August 1, 2008, through July 31, 2009. We are conducting this review in accordance with section 751(a) of the Tariff Act of 1930, as amended (the Act).

**Scope of the Order**

The merchandise subject to the antidumping duty order is PRCBs, which may be referred to as t-shirt sacks, merchandise bags, grocery bags, or checkout bags. The subject merchandise is defined as non-sealable sacks and bags with handles (including drawstrings), without zippers or integral extruded closures, with or without gussets, with or without printing, of polyethylene film having a thickness no greater than 0.035 inch (0.889 mm) and no less than 0.00035 inch (0.00889 mm), and with no length or width shorter than 6 inches (15.24 cm) or longer than 40 inches (101.6 cm). The depth of the bag may be shorter than 6 inches but not longer than 40 inches (101.6 cm).

PRCBs are typically provided without any consumer packaging and free of charge by retail establishments, *e.g.,* grocery, drug, convenience, department, specialty retail, discount stores, and restaurants, to their customers to package and carry their purchased products. The scope of the order excludes (1) polyethylene bags that are not printed with logos or store names and that are closeable with drawstrings made of polyethylene film and (2) polyethylene bags that are packed in consumer packaging with printing that refers to specific end-uses other than packaging and carrying merchandise from retail establishments, *e.g.,* garbage bags, lawn bags, trash-can liners.

As a result of changes to the Harmonized Tariff Schedule of the United States (HTSUS), imports of the subject merchandise are currently classifiable under statistical category 3923.21.0085 of the HTSUS. Furthermore, although the HTSUS subheading is provided for convenience and customs purposes, the written description of the scope of the order is dispositive.

**Selection of Respondents**

Due to the large number of companies in the review and the resulting administrative burden to examine each company for which a request had been made and not withdrawn, the Department exercised its authority to limit the number of respondents selected for examination. Where it is not practicable to examine all known exporters/producers of subject merchandise because of the large number of such companies, section 777A(c)(2) of the Act allows the Department to limit its examination to either a sample of exporters, producers, or types of products that is statistically valid, based on the information available at the time of selection, or exporters and producers accounting for the largest volume of subject merchandise from the exporting country that can be reasonably examined.

Accordingly, based on our analysis of U.S. Customs and Border Protection (CBP) import data on the record of this review (see letters from Laurie Parkhill to Daniel L. Schneiderman and to Victor S. Mroczka dated September 28, 2009) and our available resources, we decided to examine the sales of Landblue and TPBI. See Memorandum to Laurie Parkhill regarding respondent selection, dated October 15, 2009.

Because we rescinded the review with respect to Landblue, for the companies which remain under review and which we did not select for individual examination, we have determined the margin based on the weighted-average margin of TPBI, the sole remaining respondent selected for individual examination in this review.

**Affiliation**

TPBI has argued that a certain company (Company A) is not affiliated with TPBI although TPBI and Company A mutually own a company in Vietnam that produces PRCBs. See TPBI's Section A response dated December 9, 2009, at page A–6. We have preliminarily determined that Company A is "operationally in a position to exercise restraint or direction" over TPBI, pursuant to section 771(33)(F) of the Act. Accordingly, we have preliminarily determined that Company A is affiliated with TPBI. Because of the proprietary nature of this analysis, see the Memorandum to Laurie Parkhill entitled "Polyethylene Retail Carrier Bags from Thailand—Affiliation" dated August 26, 2010, for a complete discussion of this determination.

**Export Price**

For the price to the United States for TPBI, we used export price (EP) as defined in section 772(a) of the Act. We calculated EP based on the packed free-on-board or delivered price to unaffiliated purchasers in, or for exportation to, the United States. See section 772(c) of the Act. We made deductions for any movement expenses in accordance with section 772(c)(2)(A) of the Act. We made adjustments for duty drawback under the Investment Promotion Act and under Section 19 BIS of the Customs Act claimed by TPBI in accordance with section 772(c)(1)(B) of the Act. For a detailed explanation of these adjustments, see Memorandum entitled "Polyethylene Retail Carrier Bags from Thailand—Thai Plastic Bags Industries Group Preliminary Results Analysis Memorandum 8/1/08—7/31/09," dated August 26, 2010 (Analysis Memo).

**Comparison-Market Sales**

Based on a comparison of the aggregate quantity of home-market and U.S. sales and absent any information that a particular market situation in the exporting country did not permit a proper comparison, we determined that the quantity of foreign like product sold by TPBI in Thailand was sufficient to permit a proper comparison with the sales of the subject merchandise to the United States, pursuant to section 773(a) of the Act. TPBI's quantity of sales in Thailand was greater than five percent of its quantity of sales to the U.S. market. See section 773(a)(1) of the Act. Therefore, in accordance with section 773(a)(1)(B)(i) of the Act, we based normal value on the prices at which the foreign like product was first sold for consumption in Thailand in the usual commercial quantities, in the ordinary course of trade, and at the same level of trade as the U.S. sales.

**Cost of Production**

In accordance with section 773(b) of the Act, we disregarded the below-cost sales of TPBI in the most recent administrative review of this company completed before the initiation of this review. See *Polyethylene Retail Carrier Bags from Thailand: Final Results of Antidumping Duty Administrative Review and Partial Rescission of Antidumping Duty Administrative Review,* 72 FR 64580, 64581 (November 16, 2007). Therefore, we have reasonable grounds to believe or suspect that TPBI's sales of the foreign like product under consideration for the determination of normal value in this review may have been made at prices below the cost of production (COP) as provided by section 773(b)(2)(A)(ii) of the Act. Accordingly, pursuant to section 773(b)(1) of the Act, we have conducted a COP analysis of TPBI's sales in Thailand in this review.

In accordance with section 773(b)(3) of the Act, we calculated the COP based on the sum of the costs of materials and fabrication employed in producing the foreign like product, the selling, general, and administrative (SG&A) expenses, and all costs and expenses incidental to packing the merchandise. In our COP analysis, we used the home-market sales

and COP information TPBI provided in its questionnaire responses.

We relied on the COP data submitted by TPBI except as follows:

1. In accordance with the transactions-disregarded rule (section 773(f)(2) of the Act), we adjusted TPBI's cost of manufacturing (COM) to reflect the market value of printing plates that were purchased from an affiliate.

2. In accordance with the major-input rule (section 773(f)(3) of the Act), we adjusted TPBI's COM to reflect the market value of certain resin that was purchased from an affiliate.

3. With respect to the allocation of direct labor, variable overhead, and fixed overhead costs, we have preliminarily determined that the methodology reported by TPBI unreasonably distorts the COM for the subject merchandise and the foreign like product. This reported methodology is not only inconsistent with the methodology applied by TPBI in its books and records, it also results in a large variability in costs that have nothing to do with physical differences in the merchandise. Accordingly, pursuant to section 776(a) of the Act, as facts otherwise available, we have weight-averaged these costs on a per-unit basis in order to prevent such significant differences in costs between physically similar merchandise. See Statement of Administrative Action, URAA, H. Doc. 316, Vol. 1, 103rd Cong. (1994), at 834–5 (stating that, if the Department determines that costs reported by a respondent "shifted away costs from the production of the subject merchandise, or the foreign like product," the Department has the authority to "adjust costs appropriately to ensure that they (the costs) are not artificially reduced").

3. We adjusted TPBI's reported COM to remove an offset claimed by TPBI for revenue associated with the Government of Thailand's Blue Corner Rebate program.

For additional details on these adjustments, see Memorandum to Neal M. Halper entitled "Cost of Production and Constructed Value Calculation Adjustments for the Preliminary Results" dated August 26, 2010 (Cost Memo).

**Alternative Cost Methodology**

The Department's normal practice is to calculate an annual weighted-average cost for the entire period of investigation (POI) or POR. See, *e.g., Certain Pasta from Italy: Final Results of Antidumping Duty Administrative Review,* 65 FR 77852 (December 13, 2000), and the accompanying Issues and Decision Memorandum at Comment 18. We recognize that possible distortions may result if we use our normal annual-average cost methodology during a period of significant cost changes. In determining whether to deviate from our normal methodology of calculating an annual weighted-average cost, we evaluate the case-specific record evidence using two primary factors: (1) The change in the COM recognized by the respondent during the POI or POR must be deemed significant; (2) the record evidence must indicate that sales prices during the shorter averaging periods (*e.g.,* quarters rather than the POR) could be reasonably linked with the COP during the same shorter averaging periods. See, *e.g., Stainless Steel Plate in Coils From Belgium: Final Results of Antidumping Duty Administrative Review,* 73 FR 75398 (December 11, 2008), and the accompanying Issues and Decision Memorandum at Comment 4 and *Stainless Steel Sheet and Strip in Coils From Mexico; Final Results of Antidumping Duty Administrative Review,* 75 FR 6627 (February 10, 2010), and the accompanying Issues and Decision Memorandum at Comment 6. This methodology was recently upheld by the Court of International Trade in *SeAH Steel Corporation* v. *United States,* Slip. Op. 10–60 (CIT May 19, 2010), as supported by substantial evidence and otherwise in accordance with law.

*1. Significance of Cost Changes*

Record evidence shows that TPBI experienced significant changes in its total COM during the POR and that these changes were primarily attributable to the price volatility of its raw-material inputs used to produce the merchandise under consideration. Because of the proprietary nature of this analysis, see the Cost Memo for a more complete discussion of this determination.

*2. Linkage Between Cost and Sales Information*

If the Department finds cost changes to be significant in a given investigation or administrative review, the Department evaluates whether there is evidence of linkage between the cost changes and the sales prices for the POI or POR. Our definition of linkage does not require direct traceability between specific sales and their specific production cost but, rather, relies on whether there are elements which would demonstrate a reasonable correlation between the underlying costs and the final sales prices charged by the company.

Because we received the data necessary for a determination with respect to the linkage between the cost changes and the sales prices for the POR shortly before the statutory due date for the issuance of these preliminary results, we have not yet reached a conclusion as to whether there is evidence of such linkage in this review. After these preliminary results are published, we will issue our analysis regarding quarterly costs as well as any margin recalculations, if appropriate. Thus, for these preliminary results, we have not applied our quarterly cost methodology but, rather, have applied our standard methodology of using annual costs based on the data TPBI reported, adjusted as described in the "Cost of Production" section above.

*Results of Cost Test and Cost-Recovery Test*

After calculating the COP in accordance with section 773(b)(1) of the Act, we tested whether home-market sales of the foreign like product were made at prices below the COP within an extended period of time in substantial quantities and whether such prices permitted the recovery of all costs within a reasonable period of time. See section 773(b)(2) of the Act. We compared model-specific COPs to the reported home-market prices less any applicable movement charges, discounts, and rebates.

Pursuant to section 773(b)(2)(C) of the Act, when less than 20 percent of TPBI's sales of a given product were made at prices less than the COP, we did not disregard any below-cost sales of that product because the below-cost sales were not made in substantial quantities within an extended period of time. When 20 percent or more of TPBI's sales of a given product during the POR were made at prices less than the COP, we disregarded the below-cost sales because they were made in substantial quantities within an extended period of time pursuant to sections 773(b)(2)(B) and (C) of the Act.

Further, in accordance with section 773(b)(2)(D) of the Act, we compared prices to weighted-average per-unit COPs for the POR and determined that these sales were at prices which would not permit recovery of all costs within a reasonable period of time. Because we are applying our standard annual-average cost test in these preliminary results, we have also applied our standard cost-recovery test with no adjustments. Based on both of these tests, we disregarded certain sales made by TBPI in the home market which were made at below-cost prices.

*Model-Matching Methodology*

In making our comparisons of U.S. sales with sales of the foreign like product in the home market, we used the following methodology. If an identical comparison-market model with identical physical characteristics as listed below was reported, we made comparisons to weighted-average home-market prices that were based on all sales which passed the COP test of the identical product during a contemporaneous month. If there were no contemporaneous sales of an identical model, we identified the most similar home-market model. To determine the most similar model, we matched the foreign like product based on physical characteristics reported by the respondent in the following order of importance: (1) Quality, (2) bag type, (3) length, (4) width, (5) gusset, (6) thickness, (7) percentage of high-density polyethylene resin, (8) percentage of low-density polyethylene resin, (9) percentage of low linear-density polyethylene resin, (10) percentage of color concentrate, (11) percentage of ink coverage, (12) number of ink colors, and (13) number of sides printed.

*Normal Value*

We based home-market prices on the packed, ex-factory, or delivered prices to unaffiliated purchasers. When applicable, we made adjustments for differences in packing and for movement expenses in accordance with sections 773(a)(6)(A) and (B) of the Act. We also made adjustments for differences in cost attributable to differences in physical characteristics of the merchandise pursuant to section 773(a)(6)(C)(ii) of the Act and 19 CFR 351.411, adjusted as described in the "Cost of Production" section above, and for differences in circumstances of sale in accordance with section 773(a)(6)(C)(iii) of the Act and 19 CFR 351.410. We made circumstance-of-sale adjustments by deducting home-market direct selling expenses from and adding U.S. direct selling expenses to normal value.

In accordance with section 773(a)(1)(B)(i) of the Act, we based normal value at the same level of trade as the EP sales. See the "Level of Trade" section below.

*Constructed Value*

In accordance with section 773(a)(4) of the Act, we used constructed value as the basis for normal value when there were no contemporaneous comparable sales of the foreign like product in the comparison market. We calculated constructed value in accordance with section 773(e) of the Act. We included the cost of materials and fabrication, adjusted as described in the "Cost of Production" section above, SG&A expenses, U.S. packing expenses, and profit in the calculation of constructed value. In accordance with section 773(e)(2)(A) of the Act, we based SG&A expenses and profit on the amounts incurred and realized by TPBI in connection with the production and sale of the foreign like product in the ordinary course of trade for consumption in the home market.

When appropriate, we made adjustments to constructed value in accordance with section 773(a)(8) of the Act, 19 CFR 351.410, and 19 CFR 351.412 for circumstance-of-sale differences and level-of-trade differences. We made circumstance-of-sale adjustments by deducting home-market direct selling expenses from and adding U.S. direct selling expenses to constructed value. We also made adjustments, when applicable, for home-market indirect selling expenses to offset U.S. commissions. We calculated constructed value at the same level of trade as the EP. For a detailed explanation of the calculations, see Analysis Memo.

TPBI argued that the Department should not exclude home-market sales that fail the cost test from its calculation of profit for constructed value (CV profit). Citing *Atar, S.r.l.* v. *United States,* 637 F. Supp. 2d 1068, 1092 (CIT 2009) (Atar), TPBI asserts that the Court of International Trade has found the Department's practice of excluding home-market sales that fail the cost test from its calculation of CV profit to be contrary to law. TPBI misunderstands the Court's analysis in *Atar.* That decision does not apply to the facts of this case because the Atar decision was made with regard to a statutory provision not at issue here.

Section 773(e)(2)(A) of the Act provides that, in calculating CV profit, the Department will only use "actual amounts" incurred "in the ordinary course of trade" in the home market. Section 771(15)(A) of the Act makes clear that home-market sales that failed the cost test are outside the ordinary course of trade. Section 773(e)(2)(B) of the Act, on the other hand, applies if those actual amounts are not available. In the administrative review challenged in *Atar, Notice of Preliminary Results and Partial Rescission of Antidumping Duty Administrative Review: Ninth Administrative Review of the Antidumping Duty Order on Certain Pasta from Italy,* 71 FR 45017 (August 8, 2006) (unchanged in final; 72 FR 7011, February 14, 2007) (*Pasta from Italy*), the respondent did not have a viable home market so the Department calculated CV profit pursuant to section 773(e)(2)(B) of the Act.

At issue in *Atar* was the fact that there is no "ordinary course of trade" language in section 773(e)(2)(B) of the Act yet the Department nonetheless excluded sales that failed the cost test from its calculation of CV profit. The plaintiff, Atar, argued that the Department must calculate these respondent companies' profit rates based on all sales, above and below cost, for purposes of calculating CV profit pursuant to section 773(e)(2)(B) of the Act. The Court agreed with Atar, finding that the Department erred in excluding below-cost sales in its calculation of CV profit because such a requirement only applies when a viable home market exists, pursuant to section 773(e)(2)(A) of the Act. See *Atar,* 637 F. Supp. 2d 1068, 1092 (CIT 2009).[2]

In this review, by contrast, TPBI does have a viable home market and, therefore, we can determine selling expenses and profit under section 773(e)(2)(A) of the Act. Accordingly, consistent with that provision, we have used only sales made within the ordinary course of trade in calculating CV profit.

*Level of Trade*

To the extent practicable, we determined normal value for sales at the same level of trade as the U.S. sales. The normal-value level of trade is that of the starting-price sales in the home market. When normal value is based on constructed value, the level of trade is that of the sales from which we derived SG&A and profit.

To determine whether home-market sales are at a different level of trade than U.S. sales, we examined stages in the marketing process and selling functions along the chain of distribution between the producer and the unaffiliated customer. This analysis revealed that there were not any significant differences in selling functions between different channels of distribution or customer type in either the home or U.S. markets. Therefore, we determined that TPBI made all home-market sales at one level of trade. Moreover, we determined that all home-market sales by TPBI were made at the same level of trade as its U.S. sales. For a more detailed discussion, see Analysis Memo. Accordingly, we compared TPBI's U.S. sales to its home-market sales, all of

[2] *A similar decision to reject the Department's interpretation under section 773(e)(2)(B) of the Act was reversed in Thai I–Mei Frozen Foods Co., Ltd.,* v. *United States,* 2010 U.S. App. LEXIS 16677 (Fed. Cir. 2010).

which were made at the same level of trade.

*Preliminary Results of Review*

As a result of our review, we preliminarily determine that the following percentage weighted-average dumping margins on PRCBs from Thailand exist for the period August 1, 2008, through July 31, 2009:

| Producer/exporter | Percent margin |
|---|---|
| TPBI | 20.41 |
| C.P. Packaging Co., Ltd. | 20.41 |
| Giant Pack Co., Ltd. | 20.41 |
| Sahachit Watana Plastics Ind. Co., Ltd. | 20.41 |
| Thantawan Industry Public Co., Ltd. | 20.41 |

*Comments*

We will disclose the calculations used in our analysis to interested parties to this review within five days of the date of publication of this notice. See 19 CFR 351.224(b). Any interested party may request a hearing within 30 days of the date of publication of this notice. See 19 CFR 351.310. Interested parties who wish to request a hearing or to participate in a hearing if a hearing is requested must submit a written request to the Assistant Secretary for Import Administration within 30 days of the date of publication of this notice. Requests should contain the following information: (1) The party's name, address, and telephone number; (2) the number of participants; (3) a list of issues to be discussed. See 19 CFR 351.310(c).

Issues raised in the hearing will be limited to those raised in the case briefs. See 19 CFR 351.310(c). Case briefs from interested parties may be submitted not later than seven (7) days after the date on which we issue our determination regarding quarterly costs. See 19 CFR 351.309(c)(1)(ii). Rebuttal briefs from interested parties, limited to the issues raised in the case briefs, may be submitted not later than five days after the time limit for filing the case briefs or comments. See 19 CFR 351.309(d)(1). If requested, any hearing will be held two days after the scheduled date for submission of rebuttal briefs. See 19 CFR 351.310(d). Parties who submit case briefs or rebuttal briefs in this review are requested to submit with each argument a statement of the issue, a summary of the arguments not exceeding five pages, and a table of statutes, regulations, and cases cited. See 19 CFR 351.309(c)(2). The Department will issue the final results of this administrative review, including the results of its analysis of issues raised in any such written briefs or at the hearing, if held, not later than 120 days after the date of publication of this notice. See section 751(a)(3)(A) of the Act.

*Assessment Rates*

The Department shall determine, and CBP shall assess, antidumping duties on all appropriate entries. In accordance with 19 CFR 351.212(b)(1), we have calculated for TPBI an importer (or customer)-specific assessment value for merchandise subject to this review by dividing the total dumping margin (calculated as the difference between normal value and EP) for each importer or customer by the total kilograms the exporter sold to that importer or customer. We will instruct CBP to assess the resulting per-kilogram amount against each kilogram of merchandise in each of that importer's/customer's entries during the POR.

The Department clarified its "automatic assessment" regulation on May 6, 2003. This clarification applies to entries of subject merchandise during the POR produced by TPBI for which it did not know its merchandise was destined for the United States. In such instances, we will instruct CBP to liquidate unreviewed entries at the all-others rate if there is no rate for the intermediate company(ies) involved in the transaction. For a full discussion of this clarification, see *Antidumping and Countervailing Duty Proceedings: Assessment of Antidumping Duties,* 68 FR 23954 (May 6, 2003).

For the companies which were not selected for individual examination, we will instruct CBP to apply the rates listed above to all entries of subject merchandise produced and/or exported by such firms.

We intend to issue liquidation instructions to CBP 15 days after publication of the final results of review.

*Cash-Deposit Requirements*

The following deposit requirements will be effective upon publication of the notice of final results of administrative review for all shipments of PRCBs from Thailand entered, or withdrawn from warehouse, for consumption on or after the date of publication, as provided by section 751(a)(2) of the Act: (1) The cash-deposit rates for the reviewed companies will be the rates established in the final results of review; (2) for previously reviewed or investigated companies not listed above, the cash-deposit rate will continue to be the company-specific rate published for the most recent period; (3) if the exporter is not a firm covered in this review, a prior review, or the less-than-fair-value investigation but the manufacturer is, the cash-deposit rate will be the rate established for the most recent period for the manufacturer of the merchandise; (4) if neither the exporter nor the manufacturer has its own rate, the cash-deposit rate will be 2.80 percent, the all-others rate for this proceeding. These deposit requirements, when imposed, shall remain in effect until further notice.

*Notification to Importer*

This notice also serves as a preliminary reminder to importers of their responsibility under 19 CFR 351.402(f) to file a certificate regarding the reimbursement of antidumping duties prior to liquidation of the relevant entries during this review period. Failure to comply with this requirement could result in the Department's presumption that reimbursement of antidumping duties occurred and the subsequent assessment of doubled antidumping duties.

These preliminary results of administrative review are issued and published in accordance with sections 751(a)(1) and 777(i)(1) of the Act.

Dated: August 26, 2010.

**Ronald K. Lorentzen,**

*Deputy Assistant Secretary for Import Administration.*

[FR Doc. 2010–21985 Filed 9–1–10; 8:45 am]

BILLING CODE 3510–DS–P

## COMMISSION OF FINE ARTS

### Notice of Meeting

The next meeting of the U.S. Commission of Fine Arts is scheduled for 16 September 2010, at 10 a.m. in the Commission offices at the National Building Museum, Suite 312, Judiciary Square, 401 F Street, NW., Washington, DC 20001–2728. Items of discussion may include buildings, parks and memorials.

Draft agendas and additional information regarding the Commission are available on our Web site: *http://www.cfa.gov.* Inquiries regarding the agenda and requests to submit written or oral statements should be addressed to Thomas Luebke, Secretary, U.S. Commission of Fine Arts, at the above address; by e-mailing *staff@cfa.gov;* or by calling 202–504–2200. Individuals requiring sign language interpretation for the hearing impaired should contact the Secretary at least 10 days before the meeting date.

Dated 26 August 2010 in Washington, DC.

**Thomas Luebke,**

*Secretary.*

[FR Doc. 2010–21880 Filed 9–1–10; 8:45 am]

**BILLING CODE 6330–01–M**

## COORDINATING COUNCIL ON JUVENILE JUSTICE AND DELINQUENCY PREVENTION

**[OJP (OJJDP) Docket No. 1529]**

### Meeting of the Coordinating Council on Juvenile Justice and Delinquency Prevention

**AGENCY:** Coordinating Council on Juvenile Justice and Delinquency Prevention.

**ACTION:** Notice of meeting.

**SUMMARY:** The Coordinating Council on Juvenile Justice and Delinquency Prevention (Council) announces its September 2010 meeting.

**DATE:** Friday, September 24, 2010 from 10:30 a.m. to 1 p.m.

**ADDRESSES:** The meeting will take place in the third floor main conference room at the U.S. Department of Justice, Office of Justice Programs, 810 7th St. NW., Washington, DC 20531.

**FOR FURTHER INFORMATION:** Visit the Web site for the Coordinating Council at *http://www.juvenilecouncil.gov* or contact Robin Delany-Shabazz, Designated Federal Official, by telephone at 202–307–9963 [**Note:** this is not a toll-free telephone number], or by e-mail at *Robin.Delany-Shabazz@usdoj.gov.* The meeting is open to the public.

**SUPPLEMENTARY INFORMATION:** The Coordinating Council on Juvenile Justice and Delinquency Prevention, established pursuant to Section 3(2)A of the Federal Advisory Committee Act (5 U.S.C. App. 2) will meet to carry out its advisory functions under Section 206 of the Juvenile Justice and Delinquency Prevention Act of 2002, 42 U.S.C. 5601, *et seq.* Documents such as meeting announcements, agendas, minutes, and reports will be available on the Council's Web page, *http://www.JuvenileCouncil.gov,* where you may also obtain information on the meeting.

Although designated agency representatives may attend, the Council membership is composed of the Attorney General (Chair), the Administrator of the Office of Juvenile Justice and Delinquency Prevention (Vice Chair), the Secretary of Health and Human Services (HHS), the Secretary of Labor, the Secretary of Education, the Secretary of Housing and Urban Development, the Director of the Office of National Drug Control Policy, the Chief Executive Officer of the Corporation for National and Community Service, and the Assistant Secretary of Homeland Security for U.S. Immigration and Customs Enforcement. Up to nine additional members are appointed by the Speaker of the House of Representatives, the Senate Majority Leader, and the President of the United States. Other federal agencies take part in Council activities including the Departments of Agriculture, Defense, the Interior, and the Substance and Mental Health Services Administration of HHS.

**Meeting Agenda**

The agenda for this meeting will include: (a) Reports from the Council's Operations Committee and Issue Teams; (b) presentation on a youth development approach to juvenile reform; (c) research presentation on the reasons behind youth crime trends; and (d) member updates and new business.

**Registration**

For security purposes, members of the public who wish to attend the meeting must pre-register online at *http://www.juvenilecouncil.gov* no later than Friday, September 17, 2010. Should problems arise with web registration, call Daryel Dunston at 240–221–4343 or send a request to register for the September 24, 2010 Council meeting to Mr. Dunston. Include name, title, organization or other affiliation, full address and phone, fax and e-mail information and send to his attention either by fax to 301–945–4295, or by e-mail to *ddunston@edjassociates.com.* [Note: these are not toll-free telephone numbers.] Additional identification documents may be required. Space is limited.

**Note:** Photo identification will be required for admission to the meeting.

*Written Comments:* Interested parties may submit written comments and questions by Friday, September 17, 2010, to Robin Delany-Shabazz, Designated Federal Official for the Coordinating Council on Juvenile Justice and Delinquency Prevention, at *Robin.Delany-Shabazz@usdoj.gov.* The Coordinating Council on Juvenile Justice and Delinquency Prevention expects that the public statements presented will not repeat previously submitted statements.

**Jeff Slowikowski,**

*Acting Administrator.*

[FR Doc. 2010–21938 Filed 9–1–10; 8:45 am]

**BILLING CODE 4410–18–P**

## DEPARTMENT OF DEFENSE

### Department of the Navy

### Meeting of the Board of Visitors of Marine Corps University

**AGENCY:** Department of the Navy, DoD.

**ACTION:** Notice of open meeting.

**SUMMARY:** The Board of Visitors of the Marine Corps University (BOV MCU) will meet to review, develop and provide recommendations on all aspects of the academic and administrative policies of the University; examine all aspects of professional military education operations; and provide such oversight and advice, as is necessary, to facilitate high educational standards and cost effective operations. The Board will be focusing primarily on the internal procedures of Marine Corps University. All sessions of the meeting will be open to the public.

**DATES:** The meeting will be held on Thursday, October 7, 2010, from 8 a.m. to 4:30 p.m.

**ADDRESSES:** The meeting will be held at Marine Corps University President's Conference Room (Hooper Room). The address is: 2076 South Street, Quantico, Virginia 22134.

**FOR FURTHER INFORMATION CONTACT:** Randy Smith, Director of Academic Support, Marine Corps University Board of Visitors, 2076 South Street, Quantico, Virginia 22134, telephone number 703–784–9781.

Dated: August 26, 2010.

**D.J. Werner,**

*Lieutenant Commander, Judge Advocate General's Corps, U.S. Navy, Federal Register Liaison Officer.*

[FR Doc. 2010–21920 Filed 9–1–10; 8:45 am]

**BILLING CODE 3810–FF–P**

## DEPARTMENT OF DEFENSE

### Department of the Navy

### Meeting of the Board of Advisors to the Presidents of the Naval Postgraduate School and the Naval War College

**AGENCY:** Department of the Navy, DoD.

**ACTION:** Notice of open meeting.

**SUMMARY:** Pursuant to the provisions of the Federal Advisory Committee Act (Pub. L. 92–463, as amended), notice is hereby given that the following meeting of the Board of Advisors (BOA) to the Presidents of the Naval Postgraduate School (NPS) and the Naval War College (NWC) will be held. This meeting will be open to the public.

**DATES:** The meeting will be held on Tuesday, October 19, 2010, from 8 a.m. to 4 p.m. and on Wednesday, October 20, 2010, from 8 a.m. to 4 p.m. (Eastern Standard Time).

**ADDRESSES:** The meeting will be held at the Office of Naval Research, 875 N. Randolph Street, Arlington, VA.

**FOR FURTHER INFORMATION CONTACT:** Ms. Jaye Panza, Naval Postgraduate School, Monterey, CA 93943–5001, telephone number 831–656–2514.

**SUPPLEMENTARY INFORMATION:** The purpose of the meeting is to elicit the advice of the Board on the Naval Service's Postgraduate Education Program and the collaborative exchange and partnership between NPS and the Air Force Institute of Technology (AFIT). The Board examines the effectiveness with which the NPS and the NWC are accomplishing its mission. To this end, the Board will inquire into the curricula; instruction; physical equipment; administration; state of morale of the student body, faculty, and staff; fiscal affairs; and any other matters relating to the operations of the NPS and the NWC as the Board considers pertinent. Individuals without a DoD Government Common Access Card will require an escort at the meeting location. For access, information, or to send written comments regarding the NPS BOA, contact Ms. Jaye Panza, Naval Postgraduate School, 1 University Circle, Monterey, CA 93943–5001 or by fax 831–656–3145 by October 8, 2010.

Dated: August 27, 2010.

**D.J. Werner,**

*Lieutenant Commander, Judge Advocate Generals Corps, U.S. Navy, Federal Register Liaison Officer.*

[FR Doc. 2010–21924 Filed 9–1–10; 8:45 am]

**BILLING CODE 3810–FF–P**

## DEPARTMENT OF DEFENSE

### Department of the Navy

### Meeting of the Chief of Naval Operations Executive Panel

**AGENCY:** Department of the Navy, DoD.

**ACTION:** Notice of open meeting.

**SUMMARY:** The Chief of Naval Operations (CNO) Executive Panel will deliberate on the findings and proposed recommendations of the Navy Personnel Costs Subcommittee to the CNO. The meeting will consist of discussions of means by which the CNO can reduce the rising costs of employing military and civilian personnel.

**DATES:** The meeting will be held on September 23, 2010, from 1 p.m. to 3:45 p.m.

**ADDRESSES:** The meeting will be held in the Boardroom at CNA, 4825 Mark Center Drive, Alexandria, VA 22311–1846.

**FOR FURTHER INFORMATION CONTACT:** LCDR Don Rauch, CNO Executive Panel, 4825 Mark Center Drive, Alexandria, VA 22311–1846, 703–681–4941.

**SUPPLEMENTARY INFORMATION:** Individuals or interested groups may submit written statements for consideration by the CNO Executive Panel at any time or in response to the agenda of a scheduled meeting. All requests must be submitted to the Designated Federal Officer at the address detailed below.

If the written statement is in response to the agenda mentioned in this meeting notice then the statement, if it is to be considered by the Panel for this meeting, must be received at least five days prior to the meeting in question.

The Designated Federal Officer will review all timely submissions with the CNO Executive Panel Chairperson, and ensure they are provided to members of the CNO Executive Panel before the meeting that is the subject of this notice.

To contact the Designated Federal Officer, write to Executive Director, CNO Executive Panel (N00K), 4825 Mark Center Drive, 2nd Floor, Alexandria, VA 22311–1846.

Dated: August 27, 2010.

**D.J. Werner,**

*Lieutenant Commander, Office of the Judge Advocate General, U.S. Navy, Federal Register Liaison Officer.*

[FR Doc. 2010–21923 Filed 9–1–10; 8:45 am]

**BILLING CODE 3810–FF–P**

## DEPARTMENT OF EDUCATION

### Notice of Proposed Information Collection Requests

**AGENCY:** Department of Education.

**ACTION:** Comment request.

**SUMMARY:** The Department of Education (the Department), in accordance with the Paperwork Reduction Act of 1995 (PRA) (44 U.S.C. 3506(c)(2)(A)), provides the general public and Federal agencies with an opportunity to comment on proposed and continuing collections of information. This helps the Department assess the impact of its information collection requirements and minimize the reporting burden on the public and helps the public understand the Department's information collection requirements and provide the requested data in the desired format. The Director, Information Collection Clearance Division, Regulatory Information Management Services, Office of Management, invites comments on the proposed information collection requests as required by the Paperwork Reduction Act of 1995.

**DATES:** Interested persons are invited to submit comments on or before November 1, 2010.

**ADDRESSES:** Comments regarding burden and/or the collection activity requirements should be electronically mailed to *ICDocketMgr@ed.gov* or mailed to U.S. Department of Education, 400 Maryland Avenue, SW., LBJ, Washington, DC 20202–4537. Please note that written comments received in response to this notice will be considered public records.

**SUPPLEMENTARY INFORMATION:** Section 3506 of the Paperwork Reduction Act of 1995 (44 U.S.C. Chapter 35) requires that Federal agencies provide interested parties an early opportunity to comment on information collection requests. The Director, Information Collection Clearance Division, Regulatory Information Management Services, Office of Management, publishes this notice containing proposed information collection requests at the beginning of the Departmental review of the information collection. The Department of Education is especially interested in public comment addressing the following issues: (1) Is this collection necessary to the proper functions of the Department; (2) will this information be processed and used in a timely manner; (3) is the estimate of burden accurate; (4) how might the Department enhance the quality, utility, and clarity of the information to be collected; and (5) how might the Department minimize the burden of this collection on the respondents, including through the use of information technology.

Dated: August 27, 2010.

**Darrin A. King,**

*Director, Information Collection Clearance Division, Regulatory Information Management Services, Office of Management.*

### Office of Postsecondary Education

*Type of Review:* Extension.

*Title of Collection:* Targeted Teacher Shortage Areas.

*OMB Control Number:* 1840–0595.

*Agency Form Number(s):* N/A.

*Frequency of Responses:* Annually.

*Affected Public:* State, Local, or Tribal Government, State Educational Agencies (SEAs) or Local Educational Agencies (LEAs).

*Total Estimated Number of Annual Responses:* 57.

*Total Estimated Number of Annual Burden Hours:* 4,560.

*Abstract:* This request is for approval of reporting requirements that are contained in the Federal Family Education Loan Program regulations which address the targeted teacher deferment provision of the Higher Education Act of 1965, as amended. The information collected is necessary for a state to support its annual request for designation of teacher shortage areas within the state.

Requests for copies of the proposed information collection request may be accessed from *http://edicsweb.ed.gov,* by selecting the "Browse Pending Collections" link and by clicking on link number 4380. When you access the information collection, click on "Download Attachments" to view. Written requests for information should be addressed to U.S. Department of Education, 400 Maryland Avenue, SW., LBJ, Washington, DC 20202–4537. Requests may also be electronically mailed to *ICDocketMgr@ed.gov* or faxed to 202–401–0920. Please specify the complete title of the information collection and OMB Control Number when making your request.

Individuals who use a telecommunications device for the deaf (TDD) may call the Federal Information Relay Service (FIRS) at 1–800–877–8339.

[FR Doc. 2010–21913 Filed 9–1–10; 8:45 am]

**BILLING CODE 4000–01–P**

## DEPARTMENT OF ENERGY

### Federal Energy Regulatory Commission

**[Docket No. DI10–15–000]**

### Chignik Lagoon Power Utility; Notice of Declaration of Intention and Soliciting Comments, Protests, and Motions To Intervene

August 26, 2010.

Take notice that the following application has been filed with the Commission and is available for public inspection:

a. *Application Type:* Declaration of Intention.

b. *Docket No.:* DI10–15–000.

c. *Date Filed:* August 9, 2010.

d. *Applicant:* Chignik Lagoon Power Utility.

e. *Name of Project:* Packers Creek Hydroelectric Project.

f. *Location:* The proposed Packers Creek Hydroelectric Project will be located on Packers Creek, near the community of Chignik Lagoon, Lake and Peninsula Borough, Alaska, affecting T. 45 S., R. 59 W., secs. 4 and 5, Seward Meridian.

g. *Filed Pursuant to:* Section 23(b)(1) of the Federal Power Act, 16 U.S.C. 817(b).

h. *Applicant Contact:* Michael D. Dahl, 1503 W. 33rd Avenue, #310, Anchorage, AK 99585; email: *http://www.joel@polarconsult.net;* Telephone: (907) 258–2420; Fax: (907) 258–2419.

i. *FERC Contact:* Any questions on this notice should be addressed to Henry Ecton, (202) 502–8768, or E-mail address: *henry.ecton@ferc.gov.*

j. *Deadline for filing comments, protests, and/or motions:* September 27, 2010.

All documents should be filed electronically via the Internet. See 18 CFR 385.2001(a)(1)(iii) and the instructions on the Commission's Web site at *http://www.ferc.gov/docs-filing/efiling.asp.* If unable to be filed electronically, documents may be paper-filed. To paper-file, an original and seven copies should be filed with: Secretary, Federal Energy Regulatory Commission, 888 First Street, NE., Washington, DC 20426.

Commenters can submit brief comments up to 6,000 characters, without prior registration, using the eComment system at *http://www.ferc.gov/docs-filing/ecomment.asp.* Please include the docket number (DI10–15–000) on any comments, protests, and/or motions filed.

k. *Description of Project:* The proposed run-of-river Packers Creek Hydroelectric Project will consist of: (1) A proposed 9-foot-tall by 63-foot-wide diversion structure, spanning Packers Creek, located approximately at river mile 1.80; (2) a proposed 5,000-foot-long penstock; (3) a powerhouse located at river mile 0.63, containing a 145-kW pelton wheel turbine, synchronous generator, switchgear, controls, and related equipment; (4) a tailrace returning flows into Packers Creek; (5) a proposed 1,100-foot-long transmission line; and (6) appurtenant facilities.

When a Declaration of Intention is filed with the Federal Energy Regulatory Commission, the Federal Power Act requires the Commission to investigate and determine if the interests of interstate or foreign commerce would be affected by the proposed project. The Commission also determines whether or not the project: (1) Would be located on a navigable waterway; (2) would occupy or affect public lands or reservations of the United States; (3) would utilize surplus water or water power from a government dam; or (4) if applicable, has involved or would involve any construction subsequent to 1935 that may have increased or would increase the project's head or generating capacity, or have otherwise significantly modified the project's pre-1935 design or operation.

l. Locations of the Application: Copies of this filing are on file with the Commission and are available for public inspection. This filing may be viewed on the Web at *http://www.ferc.gov* using the "eLibrary" link. Enter the docket number excluding the last three digits in the docket number field to access the document. You may also register online at *http://www.ferc.gov/docs-filing/esubscription.asp* to be notified via email of new filings and issuances related to this or other pending projects. For assistance, please contact FERC Online Support at *FERCOnlineSupport@ferc.gov* or toll-free at (866) 208–3676, or TTY, contact (202) 502–8659. A copy is also available for inspection and reproduction at the address in item (h) above.

m. Individuals desiring to be included on the Commission's mailing list should so indicate by writing to the Secretary of the Commission.

n. Comments, Protests, or Motions to Intervene—Anyone may submit comments, a protest, or a motion to intervene in accordance with the requirements of Rules of Practice and Procedure, 18 CFR 385.210, .211, .214. In determining the appropriate action to take, the Commission will consider all protests or other comments filed, but only those who file a motion to intervene in accordance with the Commission's Rules may become a party to the proceeding. Any comments, protests, or motions to intervene must be received on or before the specified comment date for the particular application.

o. Filing and Service of Responsive Documents—Any filings must bear in all capital letters the title "COMMENTS", "PROTESTS", AND/OR "MOTIONS TO INTERVENE", as applicable, and the Docket Number of the particular application to which the filing refers. A copy of any motion to intervene must also be served upon each representative of the Applicant specified in the particular application.

p. Agency Comments—Federal, state, and local agencies are invited to file comments on the described application.

A copy of the application may be obtained by agencies directly from the Applicant. If an agency does not file comments within the time specified for filing comments, it will be presumed to have no comments. One copy of an agency's comments must also be sent to the Applicant's representatives.

**Kimberly D. Bose,**

*Secretary.*

[FR Doc. 2010–21962 Filed 9–1–10; 8:45 am]

**BILLING CODE 6717–01–P**

## DEPARTMENT OF ENERGY

### Federal Energy Regulatory Commission

**[Project No. 13793–000]**

### Pajuela Peak Hydro, LLC; Notice of Preliminary Permit Application Accepted for Filing and Soliciting Comments, Motions To Intervene, and Competing Applications

August 26, 2010.

On May 20, 2010, Pajuela Peak Hydro, LLC filed an application for a preliminary permit, pursuant to section 4(f) of the Federal Power Act, proposing to study the feasibility of the Pajuela Peak Pumped Storage Project, located in Kern County, in the state of California. The sole purpose of a preliminary permit, if issued, is to grant the permit holder priority to file a license application during the permit term. A preliminary permit does not authorize the permit holder to perform any land disturbing activities or otherwise enter upon lands or waters owned by others without the owners' express permission.

The proposed project would consist of the following developments:

(1) A proposed 235-ft concrete upper dam with a 1,530-ft length at crest and hydraulic head of 1,465 feet; (2) a proposed 50-ft zoned earth and rockfill lower dam with a 5,896-ft length at crest; (3) four proposed steel penstocks; (4) a proposed upper reservoir with a surface area of 80 acres and a storage capacity of 5,964 acre-feet and maximum water surface elevation of 5,425 feet mean sea level; (5) a proposed lower reservoir with a surface area of 60 acres and a storage capacity of 5,964 acre-feet and maximum water surface elevation of 4,060 feet mean sea level; (6) a proposed unlined upper low-pressure tunnel 2,500 ft-long conduit with a diameter of 14.7 feet; (7) a proposed high pressure tunnel 3,114 ft-long conduit with a diameter of 14.7 feet (8) a proposed powerhouse containing one 150 MW and two 50 MW reversible pump/turbine generating units having an installed capacity of 250 megawatts; (9) a proposed 230 kV line interconnection with either of two SCE substations or a LADWP line. The proposed development would have an average annual generation of 766,500 megawatt-hours.

Applicant Contact: Matther Shapiro, CEO; Gridflex Energy, LLC; 1210 W. Franklin Street, Ste. 2; Boise, ID 83702; (208) 246–9925.

FERC Contact: Mary Greene, 202–502–8865.

Deadline for filing comments, motions to intervene, competing applications (without notices of intent), or notices of intent to file competing applications: 60 days from the issuance of this notice. Comments, motions to intervene, notices of intent, and competing applications may be filed electronically via the Internet. See 18 CFR 385.2001(a)(1)(iii) and the instructions on the Commission's Web site (*http://www.ferc.gov/docs-filing/ferconline.asp*) under the "eFiling" link. For a simpler method of submitting text only comments, click on "Quick Comment." For assistance, please contact FERC Online Support at *FERCOnlineSupport@ferc.gov;* call toll-free at (866) 208–3676; or, for TTY, contact (202) 502–8659. Although the Commission strongly encourages electronic filing, documents may also be paper-filed. To paper-file, mail an original and eight copies to: Kimberly D. Bose, Secretary, Federal Energy Regulatory Commission, 888 First Street, NE., Washington, DC 20426.

More information about this project, including a copy of the application, can be viewed or printed on the "eLibrary" link of Commission's Web site at *http://www.ferc.gov/docs-filing/elibrary.asp.* Enter the docket number (P–13793) in the docket number field to access the document. For assistance, contact FERC Online Support.

**Kimberly D. Bose,**

*Secretary.*

[FR Doc. 2010–21964 Filed 9–1–10; 8:45 am]

**BILLING CODE 6717–01–P**

## DEPARTMENT OF ENERGY

### Federal Energy Regulatory Commission

**[Project No. 2150–082]**

### Puget Sound Energy, Inc., Notice of Application for Amendment of License and Soliciting Comments, Motions To Intervene, and Protests

August 27, 2010.

Take notice that the following hydroelectric application has been filed with the Commission and is available for public inspection:

a. *Type of Application:* Amendment of License.

b. *Project No.:* 2150–082.

c. *Date Filed:* August 5, 2010.

d. *Applicant:* Puget Sound Energy, Inc.

e. *Name of Project:* Baker River Hydroelectric Project.

f. *Location:* The project is located on the Baker River in Skagit and Whatcom Counties, Washington, and occupies federal lands within the Mt. Baker-Snoqualmie National Forest.

g. *Pursuant to:* Federal Power Act, 16 U.S.C. 791a–825r.

h. *Applicant Contact:* Kim William Lane, P.E., Puget Sound Energy, Inc., M/S PSE–09N, P.O. Box 90868, Bellevue, WA 98009–0868. Tel: (425) 462–3372.

i. *FERC Contact:* Any questions on this notice should be addressed to Vedula Sarma at (202) 502–6190 or *vedula.sarma@ferc.gov.*

j. *Deadline for filing comments and/or motions:* September 27, 2010.

Comments, protests, and interventions may be filed electronically via the Internet in lieu of paper. *See* 18 CFR 385.2001(a)(1)(iii) and the instructions on the Commission's Web site (*http://www.ferc.gov/docs-filing/efiling.asp*). Commenters can submit brief comments up to 6,000 characters, without prior registration, using the eComment system (*http://www.ferc.gov/docs-filing/ecomment.asp)* and must include name and contact information at the end of comments. The Commission strongly encourages electronic filings.

All documents (original and seven copies) filed by paper should be sent to: Secretary, Federal Energy Regulatory Commission, 888 First Street, NE., Washington, DC 20426. Please include the project number (P–2150–082) on any comments or motions filed.

The Commission's Rules of Practice and Procedure require all interveners filing documents with the Commission to serve a copy of that document on each person whose name appears on the

official service list for the project. Further, if an intervener files comments or documents with the Commission relating to the merits of an issue that may affect the responsibilities of a particular resource agency, they must also serve a copy of the document on that resource agency. A copy of any motion to intervene must also be served upon each representative of the Applicant specified in the particular application.

k. *Description of Application:* In its amendment application, the licensee proposes to: (1) Move the project's authorized (but unconstructed) powerhouse to a location about 300 feet southwest of the existing Lower Baker powerhouse, (2) install a single turbine-generator unit (Unit 4) instead of the project's authorized (but unconstructed) two turbine-generator units in the new powerhouse, (3) install a new 1,500 cubic foot per second (cfs) bypass valve in the powerhouse, (4) construct a new penstock tunnel to connect the new powerhouse to the existing surge tank, and (5) construct a new 300-foot-long single circuit 115 kilovolt overhead transmission line to connect the new powerhouse to the existing Lower Baker powerhouse. The proposed single turbine-generator unit would have the same 1,500 cfs hydraulic capacity and the same 30 megawatts installed capacity as the project's currently authorized (but unconstructed) two generating units.

l. *Locations of the Application:* A copy of the application is available for inspection and reproduction at the Commission's Public Reference Room, located at 888 First Street, NE., Room 2A, Washington, DC 20426, or by calling (202) 502–8371. This filing may also be viewed on the Commission's Web site using the "eLibrary" link at *http://elibrary.ferc.gov/idmws/search/fercgensearch.asp.* Enter the docket number excluding the last three digits (P–2150) in the docket number field to access the document. You may also register online at *http://www.ferc.gov/docs-filing/esubscription.asp* to be notified via e-mail of new filings and issuances related to this or other pending projects. For assistance, call 1–866–208–3676 or e-mail *FERCOnlineSupport@ferc.gov,* for TTY, call (202) 502–8659. A copy is also available for inspection and reproduction at the address in item (h) above.

m. Individuals desiring to be included on the Commission's mailing list should so indicate by writing to the Secretary of the Commission.

n. *Comments, Protests, or Motions to Intervene:* Anyone may submit comments, a protest, or a motion to intervene in accordance with the requirements of Rules of Practice and Procedure, 18 CFR 385.210, .211, .214. In determining the appropriate action to take, the Commission will consider all protests or other comments filed, but only those who file a motion to intervene in accordance with the Commission's Rules may become a party to the proceeding. Any comments, protests, or motions to intervene must be received on or before the specified comment date for the particular application.

o. Any filings must bear in all capital letters the title "COMMENTS", "PROTEST", or "MOTION TO INTERVENE", as applicable, and the Project Number of the particular application to which the filing refers.

p. *Agency Comments:* Federal, state, and local agencies are invited to file comments on the described application. A copy of the application may be obtained by agencies directly from the Applicant. If an agency does not file comments within the time specified for filing comments, it will be presumed to have no comments. One copy of an agency's comments must also be sent to the Applicant's representatives.

**Kimberly D. Bose,**

*Secretary.*

[FR Doc. 2010–21968 Filed 9–1–10; 8:45 am]

**BILLING CODE 6717–01–P**

---

## DEPARTMENT OF ENERGY

### Federal Energy Regulatory Commission

**[Project No. 13823–000]**

### Natural Currents Energy Services, LLC; Notice of Preliminary Permit Application Accepted for Filing and Soliciting Comments, Motions To Intervene, and Competing Applications

August 27, 2010.

On August 5, 2010, Natural Currents Energy Services, LLC filed an application for a preliminary permit, pursuant to section 4(f) of the Federal Power Act, proposing to study the feasibility of the Killisnoo Tidal Energy Project (Killisnoo Project), located in Kootznahoo Inlet northeast of Killisnoo Island, near the City of Angoon in the Skagway-Hoonah-Angoon Census Area of southeastern Alaska. The sole purpose of a preliminary permit, if issued, is to grant the permit holder priority to file a license application during the permit term. A preliminary permit does not authorize the permit holder to perform any land disturbing activities or otherwise enter upon lands or waters owned by others without the owners' express permission.

The proposed Killisnoo Project would consist of: (1) A moored test platform or dock, or underwater tethering device, pending evaluation of specific site conditions; (2) ten 25-kilowatt (kW) Red Hawk in-stream turbine modules for a total generating capacity of 250 kW; (3) an approximately 650-foot-long, 480-volt underwater transmission line connecting the Red Hawk modules to an existing above-ground local distribution system; and (4) appurtenant facilities. The project would have an estimated average annual generation of 1,000 megawatt-hours.

*Applicant Contact:* Roger Bason, President, Natural Currents Energy Services, LLC, 24 Roxanne Boulevard, Highland, NY 12528; phone: (845) 691–4008.

*FERC Contact:* Jennifer Harper, (202) 502–6136.

*Deadline for filing comments, motions to intervene, competing applications (without notices of intent), or notices of intent to file competing applications:* 60 days from the issuance of this notice. Competing applications and notices of intent must meet the requirements of 18 CFR 4.36. Comments, motions to intervene, notices of intent, and competing applications may be filed electronically via the Internet. See 18 CFR 385.2001(a)(1)(iii) and the instructions on the Commission's Web site (*http://www.ferc.gov/docs-filing/ferconline.asp*) under the "eFiling" link. For a simpler method of submitting text only comments, click on "eComment." For assistance, please contact FERC Online Support at *FERCOnlineSupport@ferc.gov;* call toll-free at (866) 208–3676; or, for TTY, contact (202) 502–8659. Although the Commission strongly encourages electronic filing, documents may also be paper-filed. To paper-file, mail an original and eight copies to: Kimberly D. Bose, Secretary, Federal Energy Regulatory Commission, 888 First Street, NE., Washington, DC 20426.

More information about this project, including a copy of the application, can be viewed or printed on the "eLibrary" link of Commission's Web site at *http://www.ferc.gov/docs-filing/elibrary.asp.* Enter the docket number (P–13823) in the docket number field to access the document. For assistance, contact FERC Online Support.

**Kimberly D. Bose,**

*Secretary.*

[FR Doc. 2010–21970 Filed 9–1–10; 8:45 am]

**BILLING CODE 6717–01–P**

## DEPARTMENT OF ENERGY

### Federal Energy Regulatory Commission

**[Project No. 13723–000]**

### Iron Mask Hydro, LLC; Notice of Preliminary Permit Application Accepted for Filing and Soliciting Comments, Motions To Intervene, and Competing Applications

August 27, 2010.

On May 6, 2010, Iron Mask Hydro, LLC filed an application for a preliminary permit, pursuant to section 4(f) of the Federal Power Act (FPA), proposing to study the feasibility of the Iron Mask Pumped Storage Project to be located near the U.S. Bureau of Reclamation's Canyon Ferry Lake in the vicinity of Townsend, Montana, in Broadwater County, Montana. The sole purpose of a preliminary permit, if issued, is to grant the permit holder priority to file a license application during the permit term. A preliminary permit does not authorize the permit holder to perform any land-disturbing activities or otherwise enter upon lands or waters owned by others without the owners' express permission.

The proposed project will consist of the following: (1) A 225-foot-high, 1,795-foot-long upper dam made of either zoned earth and rockfill or concrete-face earth and rockfill; (2) a 50-foot-high, 950-foot-long earth-filled upper saddle dike A; (3) a 20-foot-high, 400-foot-long earth-filled upper saddle dike B; (4) a 40-foot-high, 6,559-foot-long lower embankment made of zoned earth or rockfill; (5) an upper reservoir with a storage capacity of 4,888 acre-feet; (6) a lower reservoir with a storage capacity of 4,888 acre-feet; (7) a 1,626-foot-long, 12.9-foot-diameter unlined upper low-pressure tunnel; (8) a 4,809-foot-long, 12.9-foot-diameter unlined, concrete-lined, and steel-lined pressure shaft; (9) a 200-foot-long, 12.9-foot-diameter concrete-lined and steel-lined high pressure tunnel; (10) four 6.5-foot-diameter steel-lined penstocks (length to be determined) ; (11) a 5,073-foot-long, 15.5-foot-diameter concrete-lined or unlined tailrace; (12) a 260-foot-long, 65-foot-wide, 120-foot-high underground powerhouse located at a depth of 1,000 feet; (13) one 150-megawatt (MW), one 100–MW, and one 50–MW reversible pump-turbines totaling 300 MW of generating capacity, with up to 100 MW of additional pumping capacity, for a total of 400 MW pumping capacity; (14) an approximately 3,000-foot-long, 24-foot-high main access tunnel leading from the ground level to the powerhouse; and (15) a new single-circuit 230-kilovolt, 4.9-mile-long transmission line with a 150-foot right of way.

Annual energy production is estimated to be 919,800 megawatt hours.

*Applicant Contact:* Matthew Shapiro, CEO, Gridflex Energy, LLC, 1210 W. Franklin Street, Ste. 2, Boise, ID 83702; phone: (208) 246–9925.

*FERC Contact:* Kelly Wolcott (202) 502–6480.

*Deadline for filing comments, motions to intervene, competing applications (without notices of intent), or notices of intent to file competing applications:* 60 days from the issuance of this notice. Competing applications and notices of intent must meet the requirements of 18 CFR 4.36. Comments, motions to intervene, notices of intent, and competing applications may be filed electronically via the Internet. See 18 CFR 385.2001(a)(1)(iii) and the instructions on the Commission's Web site *http://www.ferc.gov/docs-filing/efiling.asp.* Commenters can submit brief comments up to 6,000 characters, without prior registration, using the eComment system at *http://www.ferc.gov/docs-filing/ecomment.asp.* You must include your name and contact information at the end of your comments. For assistance, please contact FERC Online Support. Although the Commission strongly encourages electronic filing, documents may also be paper-filed. To paper-file, mail an original and seven copies to: Kimberly D. Bose, Secretary, Federal Energy Regulatory Commission, 888 First Street, NE., Washington, DC 20426.

More information about this project, including a copy of the application, can be viewed or printed on the "eLibrary" link of Commission's Web site at *http://www.ferc.gov/docs-filing/elibrary.asp.* Enter the docket number (P–13723–000) in the docket number field to access the document. For assistance, contact FERC Online Support.

**Kimberly D. Bose,**

*Secretary.*

[FR Doc. 2010–21969 Filed 9–1–10; 8:45 am]

**BILLING CODE 6717–01–P**

## DEPARTMENT OF ENERGY

### Federal Energy Regulatory Commission

**[Docket No. PR10–86–000, Docket No. PR10–87–000, Docket No. PR10–88–000, Docket No. PR10–89–000, Docket No. PR10–90–000]**

### Notice of Baseline Filings: The Peoples Gas Light and Coke Company, Minnesota Energy Resources Corporation, Louisville Gas and Electric Company, Cobra Pipeline Ltd., Humble Gas Pipeline Company (Not Consolidated)

August 27, 2010.

Take notice that on August 25, 2010, August 26, 2010, and August 27, 2010, respectively the applicants listed above submitted their baseline filing of its Statement of Operating Conditions for services provided under section 311 of the Natural Gas Policy Act of 1978 (NGPA).

Any person desiring to participate in this rate proceeding must file a motion to intervene or to protest this filing must file in accordance with Rules 211 and 214 of the Commission's Rules of Practice and Procedure (18 CFR 385.211 and 385.214). Protests will be considered by the Commission in determining the appropriate action to be taken, but will not serve to make protestants parties to the proceeding. Any person wishing to become a party must file a notice of intervention or motion to intervene, as appropriate. Such notices, motions, or protests must be filed on or before the date as indicated below. Anyone filing an intervention or protest must serve a copy of that document on the Applicant. Anyone filing an intervention or protest on or before the intervention or protest date need not serve motions to intervene or protests on persons other than the Applicant.

The Commission encourages electronic submission of protests and interventions in lieu of paper using the "eFiling" link at *http://www.ferc.gov.* Persons unable to file electronically should submit an original and 14 copies of the protest or intervention to the Federal Energy Regulatory Commission, 888 First Street, NE., Washington, DC 20426.

This filing is accessible on-line at *http://www.ferc.gov*, using the "eLibrary" link and is available for review in the Commission's Public Reference Room in Washington, DC. There is an "eSubscription" link on the Web site that enables subscribers to receive e-mail notification when a document is added to a subscribed

docket(s). For assistance with any FERC Online service, please e-mail *FERCOnlineSupport@ferc.gov*, or call (866) 208–3676 (toll free). For TTY, call (202) 502–8659.

*Comment Date:* 5 p.m. Eastern time on Wednesday, September 1, 2010.

**Kimberly D. Bose,**

*Secretary.*

[FR Doc. 2010–21973 Filed 9–1–10; 8:45 am]

**BILLING CODE 6717–01–P**

## DEPARTMENT OF ENERGY

### Federal Energy Regulatory Commission

**[Project No. 503–048]**

### Idaho Power Company, Idaho; Notice of Availability of Final Environmental Impact Statement for the Swan Falls Project

August 26, 2010.

In accordance with the National Environmental Policy Act of 1969 and the Federal Energy Regulatory Commission's (Commission or FERC's) regulations, 18 Code of Federal Regulations (CFR) Part 380 (Order No. 486, 52 **Federal Register** 47897), the Office of Energy Projects has reviewed Idaho Power Company's application for license for the Swan Falls Project (FERC Project No. 503–048), located on the Snake River in Ada and Owyhee counties, Idaho, about 35 miles southwest of Boise. The project currently occupies 529 acres of federal lands administered by the Bureau of Land Management; however, Idaho Power proposes a reduction in the project boundary to include only 181 acres of federal lands. Commission staff has prepared a final Environmental Impact Statement (EIS) for the project.

The final EIS contains staff's evaluation of the applicant's proposal and alternatives for relicensing the Swan Falls Project. The final EIS documents the views of governmental agencies, non-governmental organizations, affected Indian tribes, the public, the license applicant, and Commission staff.

A copy of the final EIS is available for review at the Commission in the Public Reference Branch, Room 2a, located at 888 First Street, NE., Washington, DC 20426. The final EIS also may be viewed on the Commission's Web site at *http://www.ferc.gov* using the "eLibrary" link. Enter the docket number excluding the last three digits in the docket number field to access the document. For assistance, contact FERC Online Support at *FERCOnlineSupport@ferc.gov* or toll-free at 1–866–208–3676, or for TTY, 202–502–8659.

You may also register online at *http://www.ferc.gov/docs-filing/esubscription.asp* to be notified via e-mail of new filings and issuances related to this or other pending projects. For assistance, contact FERC Online Support. For further information, contact Dianne Rodman by telephone at 202–502–6077 or by e-mail at *Dianne.Rodman@ferc.gov*.

**Kimberly D. Bose,**

*Secretary.*

[FR Doc. 2010–21963 Filed 9–1–10; 8:45 am]

**BILLING CODE 6717–01–P**

## DEPARTMENT OF ENERGY

### Federal Energy Regulatory Commission

**[Docket No. PR10–84–000; PR10–85–000]**

### Centana Intrastate Pipeline, LLC; Notice of Filing

August 27, 2010.

Take notice that on August 25, 2010, Centana Intrastate Pipeline, LLC (Centana) filed in compliance to Delegated Letter Order issued July 26, 2010, in Docket Nos. PR10–9–000 and PR10–9–001. Centana filed revised Statement of Operating Conditions (SOC) for its Storage Services and Transportation Services, incorporating all information relevant to parking and lending services and including revised stand-alone rate sheets listing all services offered and their respective minimum and maximum rates.

Any person desiring to participate in this rate filing must file in accordance with Rules 211 and 214 of the Commission's Rules of Practice and Procedure (18 CFR 385.211 and 385.214). Protests will be considered by the Commission in determining the appropriate action to be taken, but will not serve to make protestants parties to the proceeding. Any person wishing to become a party must file a notice of intervention or motion to intervene, as appropriate. Such notices, motions, or protests must be filed on or before the date as indicated below. Anyone filing an intervention or protest must serve a copy of that document on the Applicant. Anyone filing an intervention or protest on or before the intervention or protest date need not serve motions to intervene or protests on persons other than the Applicant.

The Commission encourages electronic submission of protests and interventions in lieu of paper using the "eFiling" link at *http://www.ferc.gov.* Persons unable to file electronically should submit an original and 14 copies of the protest or intervention to the Federal Energy Regulatory Commission, 888 First Street, NE., Washington, DC 20426.

This filing is accessible on-line at *http://www.ferc.gov,* using the "eLibrary" link and is available for review in the Commission's Public Reference Room in Washington, DC. There is an "eSubscription" link on the Web site that enables subscribers to receive e-mail notification when a document is added to a subscribed docket(s). For assistance with any FERC Online service, please e-mail *FERCOnlineSupport@ferc.gov,* or call (866) 208–3676 (toll free). For TTY, call (202) 502–8659.

*Comment Date:* 5 p.m. Eastern time on Wednesday, September 8, 2010.

**Kimberly D. Bose,**

*Secretary.*

[FR Doc. 2010–21972 Filed 9–1–10; 8:45 am]

**BILLING CODE 6717–01–P**

## DEPARTMENT OF ENERGY

### Federal Energy Regulatory Commission

**[Docket No. PR09–8–004]**

### Washington Gas Light Company; Notice of Filing

August 27, 2010.

Take notice that on August 24, 2010, Washington Gas Light Company (Washington Gas) filed to revise the Statement of Interstate Service Rates of its Firm Interstate Transportation Service Operating Statement to reflect the current lost and unaccounted for retention rate approved by Delegated Letter Order issued on January 7, 2010, in Docket No. PR09–8–003.

Any person desiring to participate in this rate filing must file in accordance with Rules 211 and 214 of the Commission's Rules of Practice and Procedure (18 CFR 385.211 and 385.214). Protests will be considered by the Commission in determining the appropriate action to be taken, but will not serve to make protestants parties to the proceeding. Any person wishing to become a party must file a notice of intervention or motion to intervene, as appropriate. Such notices, motions, or protests must be filed on or before the date as indicated below. Anyone filing an intervention or protest must serve a copy of that document on the Applicant. Anyone filing an intervention or protest on or before the intervention or protest

date need not serve motions to intervene or protests on persons other than the Applicant.

The Commission encourages electronic submission of protests and interventions in lieu of paper using the "eFiling" link at *http://www.ferc.gov.* Persons unable to file electronically should submit an original and 14 copies of the protest or intervention to the Federal Energy Regulatory Commission, 888 First Street, NE., Washington, DC 20426.

This filing is accessible on-line at *http://www.ferc.gov,* using the "eLibrary" link and is available for review in the Commission's Public Reference Room in Washington, DC. There is an "eSubscription" link on the Web site that enables subscribers to receive e-mail notification when a document is added to a subscribed docket(s). For assistance with any FERC Online service, please e-mail *FERCOnlineSupport@ferc.gov,* or call (866) 208–3676 (toll free). For TTY, call (202) 502–8659.

*Comment Date:* 5 p.m. Eastern time on Wednesday, September 8, 2010.

**Kimberly D. Bose,**

*Secretary.*

[FR Doc. 2010–21971 Filed 9–1–10; 8:45 am]

**BILLING CODE 6717–01–P**

---

## DEPARTMENT OF ENERGY

### Federal Energy Regulatory Commission

**[Docket No. ER10–2298–000]**

### Enserco Energy Inc.; Supplemental Notice That Initial Market-Based Rate Filing Includes Request for Blanket Section 204 Authorization

August 27, 2010.

This is a supplemental notice in the above-referenced proceeding of Enserco Energy Inc.'s application for market-based rate authority, with an accompanying rate tariff, noting that such application includes a request for blanket authorization, under 18 CFR part 34, of future issuances of securities and assumptions of liability.

Any person desiring to intervene or to protest should file with the Federal Energy Regulatory Commission, 888 First Street, NE., Washington, DC 20426, in accordance with Rules 211 and 214 of the Commission's Rules of Practice and Procedure (18 CFR 385.211 and 385.214). Anyone filing a motion to intervene or protest must serve a copy of that document on the Applicant.

Notice is hereby given that the deadline for filing protests with regard to the applicant's request for blanket authorization, under 18 CFR part 34, of future issuances of securities and assumptions of liability, is September 16, 2010.

The Commission encourages electronic submission of protests and interventions in lieu of paper, using the FERC Online links at *http://www.ferc.gov.* To facilitate electronic service, persons with Internet access who will eFile a document and/or be listed as a contact for an intervenor must create and validate an eRegistration account using the eRegistration link. Select the eFiling link to log on and submit the intervention or protests.

Persons unable to file electronically should submit an original and 14 copies of the intervention or protest to the Federal Energy Regulatory Commission, 888 First Street, NE., Washington, DC 20426.

The filings in the above-referenced proceeding are accessible in the Commission's eLibrary system by clicking on the appropriate link in the above list. They are also available for review in the Commission's Public Reference Room in Washington, DC. There is an eSubscription link on the Web site that enables subscribers to receive e-mail notification when a document is added to a subscribed docket(s). For assistance with any FERC Online service, please e-mail *FERCOnlineSupport@ferc.gov,* or call (866) 208–3676 (toll free). For TTY, call (202) 502–8659.

**Kimberly D. Bose,**

*Secretary.*

[FR Doc. 2010–21966 Filed 9–1–10; 8:45 am]

**BILLING CODE 6717–01–P**

---

## DEPARTMENT OF ENERGY

### Federal Energy Regulatory Commission

**[Docket No. ER10–2345–000]**

### Domtar Maine, LLC; Supplemental Notice That Initial Market-Based Rate Filing Includes Request for Blanket Section 204 Authorization

August 27, 2010.

This is a supplemental notice in the above-referenced proceeding of Domtar Maine, LLC's application for market-based rate authority, with an accompanying rate tariff, noting that such application includes a request for blanket authorization, under 18 CFR part 34, of future issuances of securities and assumptions of liability.

Any person desiring to intervene or to protest should file with the Federal Energy Regulatory Commission, 888 First Street, NE., Washington, DC 20426, in accordance with Rules 211 and 214 of the Commission's Rules of Practice and Procedure (18 CFR 385.211 and 385.214). Anyone filing a motion to intervene or protest must serve a copy of that document on the Applicant.

Notice is hereby given that the deadline for filing protests with regard to the applicant's request for blanket authorization, under 18 CFR part 34, of future issuances of securities and assumptions of liability, is September 16, 2010.

The Commission encourages electronic submission of protests and interventions in lieu of paper, using the FERC Online links at *http://www.ferc.gov.* To facilitate electronic service, persons with Internet access who will eFile a document and/or be listed as a contact for an intervenor must create and validate an eRegistration account using the eRegistration link. Select the eFiling link to log on and submit the intervention or protests.

Persons unable to file electronically should submit an original and 14 copies of the intervention or protest to the Federal Energy Regulatory Commission, 888 First Street, NE., Washington, DC 20426.

The filings in the above-referenced proceeding are accessible in the Commission's eLibrary system by clicking on the appropriate link in the above list. They are also available for review in the Commission's Public Reference Room in Washington, DC. There is an eSubscription link on the Web site that enables subscribers to receive e-mail notification when a document is added to a subscribed docket(s). For assistance with any FERC Online service, please e-mail *FERCOnlineSupport@ferc.gov,* or call (866) 208–3676 (toll free). For TTY, call (202) 502–8659.

**Kimberly D. Bose,**

*Secretary.*

[FR Doc. 2010–21967 Filed 9–1–10; 8:45 am]

**BILLING CODE 6717–01–P**

## DEPARTMENT OF ENERGY

### Federal Energy Regulatory Commission

**[Docket No. CP10–491–000]**

### Kinder Morgan Interstate Gas Transmission, LLC; Notice of Request Under Blanket Authorization

August 27, 2010.

Take notice that on August 25, 2010, Kinder Morgan Interstate Gas Transmission, LLC (Kinder Morgan), 370 Van Gordon Street, Lakewood, Colorado 80228–8304 filed in Docket No. CP10–491–000, a prior notice request pursuant to sections 157.205 and 157.216 of the Commission's regulations under the Natural Gas Act (NGA). Kinder Morgan seeks authorization to abandon its Sand Draw Compressor Station located in Fremont County, Wyoming. Kinder Morgan proposes to perform these activities under its blanket certificate originally issued in Docket Nos. CP83–140–000 and CP83–140–001 [22 FERC ¶ 62,330 (1983)], all as more fully set forth in the application which is on file with the Commission and open to public inspection.

Specifically, the facilities at issue are one 500 horsepower Ajax DPC–540 compressor unit and one 460 horsepower Cooper Bessemer GMXE–6 compressor unit, with appurtenances, located in Section 10, Township 32 North, Range 95 West, Fremont County, Wyoming. In addition, Kinder Morgan intends to abandon station piping, buildings, a storage tank, valves, check meter, and other auxiliary equipment.

The filing may be viewed on the Web at *http://www.ferc.gov* using the "eLibrary" link. Enter the docket number excluding the last three digits in the docket number field to access the document. For assistance, contact FERC at *FERCOnlineSupport@ferc.gov* or call toll-free, (886) 208–3676 or TYY, (202) 502–8659.

Any questions regarding this application should be directed to Robert F. Harrington, Vice President, Regulatory, Kinder Morgan Interstate Gas Transmission, LLC, 370 Van Gordon Street, Lakewood, Colorado 80228–8304, or by calling (303) 763–3258 (telephone) or (303) 984–3272 (fax), *Robert_Harrington@kindermorgan.com,* Ashley L. Garber, Assistant General Counsel, Kinder Morgan Interstate Gas Transmission, LLC, 370 Van Gordon Street, Lakewood, Colorado 80228–8304, or by calling (303) 914–7727 (telephone) or (303) 984–3272 (fax), *Ashley_Garber@kindermorgan.com,* or to J. Curtis Moffatt, Robert F. Christin, and Shippen Howe, Van Ness Feldman, P.C., 1050 Thomas Jefferson Street, NW., 7th Floor, Washington, DC 20007–3877, or by calling (202) 298–1800 (telephone) or (202) 338–2416 (fax), *JCM@vnf.com, RFC@vnf.com, SXH@vnf.com.*

Any person or the Commission's Staff may, within 60 days after the issuance of the instant notice by the Commission, file pursuant to Rule 214 of the Commission's Procedural Rules (18 CFR 385.214) a motion to intervene or notice of intervention and, pursuant to section 157.205 of the Commission's Regulations under the NGA (18 CFR 157.205) a protest to the request. If no protest is filed within the time allowed therefore, the proposed activity shall be deemed to be authorized effective the day after the time allowed for protest. If a protest is filed and not withdrawn within 30 days after the time allowed for filing a protest, the instant request shall be treated as an application for authorization pursuant to section 7 of the NGA.

The Commission strongly encourages electronic filings of comments, protests, and interventions via the Internet in lieu of paper. See 18 CFR 385.2001(a)(1)(iii) and the instructions on the Commission's Web site (*http://www.ferc.gov*) under the "e-Filing" link. Persons unable to file electronically should submit an original and 14 copies of the protest or intervention to the Federal Energy Regulatory Commission, 888 First Street, NE., Washington, DC 20426.

**Kimberly D. Bose,**

*Secretary.*

[FR Doc. 2010–21965 Filed 9–1–10; 8:45 am]

**BILLING CODE 6717–01–P**

## FARM CREDIT SYSTEM INSURANCE CORPORATION

### Regular Meeting

**AGENCY:** Farm Credit System Insurance Corporation Board.

**SUMMARY:** Notice is hereby given of the regular meeting of the Farm Credit System Insurance Corporation Board (Board).

**DATE AND TIME:** The meeting of the Board will be held at the offices of the Farm Credit Administration in McLean, Virginia, on September 8, 2010, from 1:30 p.m. until such time as the Board concludes its business.

**FOR FURTHER INFORMATION CONTACT:** Roland E. Smith, Secretary to the Farm Credit System Insurance Corporation Board, (703) 883–4009, TTY (703) 883–4056.

**ADDRESSES:** Farm Credit System Insurance Corporation, 1501 Farm Credit Drive, McLean, Virginia 22102.

**SUPPLEMENTARY INFORMATION:** Parts of this meeting of the Board will be open to the public (limited space available) and parts will be closed to the public. In order to increase the accessibility to Board meetings, persons requiring assistance should make arrangements in advance. The matters to be considered at the meeting are:

**Closed Sesson**

- Report on System Performance.

**Open Session**

*A. Approval of Minutes*

- June 10, 2010 (Open and Closed).

*B. Business Reports*

- Quarterly Financial Reports.
- Report on Insured and Other Obligations.
- Quarterly Report on Annual Performance Plan.

*C. New Business*

- Annual Performance Plan FY 2011–2012.
- Proposed 2011 and 2012 Budgets.
- Insurance Fund Progress Review and Setting of Premium Range Guidance for 2011.

Dated: August 26, 2010.

**Roland E. Smith,**

*Secretary, Farm Credit System Insurance Corporation Board.*

[FR Doc. 2010–21863 Filed 9–1–10; 8:45 am]

**BILLING CODE 6710–01–P**

## FEDERAL RESERVE SYSTEM

### Proposed Agency Information Collection Activities; Comment Request

**AGENCY:** Board of Governors of the Federal Reserve System.

**SUMMARY:** *Background.* On June 15, 1984, the Office of Management and Budget (OMB) delegated to the Board of Governors of the Federal Reserve System (Board) its approval authority under the Paperwork Reduction Act (PRA), as per 5 CFR 1320.16, to approve of and assign OMB control numbers to collection of information requests and requirements conducted or sponsored by the Board under conditions set forth in 5 CFR Part 1320 Appendix A.1. Board-approved collections of information are incorporated into the official OMB inventory of currently approved collections of information. Copies of the Paperwork Reduction Act Submission, supporting statements and

approved collection of information instruments are placed into OMB's public docket files. The Federal Reserve may not conduct or sponsor, and the respondent is not required to respond to, an information collection that has been extended, revised, or implemented on or after October 1, 1995, unless it displays a currently valid OMB control number.

**Request for Comment on Information Collection Proposals**

The following information collections, which are being handled under this delegated authority, have received initial Board approval and are hereby published for comment. At the end of the comment period, the proposed information collections, along with an analysis of comments and recommendations received, will be submitted to the Board for final approval under OMB delegated authority. Comments are invited on the following:

a. Whether the proposed collection of information is necessary for the proper performance of the Federal Reserve's functions; including whether the information has practical utility;

b. The accuracy of the Federal Reserve's estimate of the burden of the proposed information collection, including the validity of the methodology and assumptions used;

c. Ways to enhance the quality, utility, and clarity of the information to be collected; and

d. Ways to minimize the burden of information collection on respondents, including through the use of automated collection techniques or other forms of information technology.

**DATES:** Comments must be submitted on or before November 1, 2010.

**ADDRESSES:** You may submit comments, identified by Reg V, by any of the following methods:

- *Agency Web Site: http://www.federalreserve.gov.* Follow the instructions for submitting comments at *http://www.federalreserve.gov/generalinfo/foia/ProposedRegs.cfm.*
- *Federal eRulemaking Portal: http://www.regulations.gov.* Follow the instructions for submitting comments.
- *E-mail: regs.comments@federalreserve.gov.* Include the OMB control number in the subject line of the message.
- *FAX:* 202/452–3819 or 202/452–3102.
- *Mail:* Jennifer J. Johnson, Secretary, Board of Governors of the Federal Reserve System, 20th Street and Constitution Avenue, NW., Washington, DC 20551.

All public comments are available from the Board's Web site at *http://www.federalreserve.gov/generalinfo/foia/ProposedRegs.cfm* as submitted, unless modified for technical reasons. Accordingly, your comments will not be edited to remove any identifying or contact information. Public comments may also be viewed electronically or in paper form in Room MP–500 of the Board's Martin Building (20th and C Streets, NW.) between 9 a.m. and 5 p.m. on weekdays.

Additionally, commenters should send a copy of their comments to the OMB Desk Officer by mail to the Office of Information and Regulatory Affairs, U.S. Office of Management and Budget, New Executive Office Building, Room 10235, 725 17th Street, NW., Washington, DC 20503 or by fax to 202–395–6974.

**FOR FURTHER INFORMATION CONTACT:** A copy of the PRA OMB submission, including the proposed reporting form and instructions, supporting statement, and other documentation will be placed into OMB's public docket files, once approved. These documents will also be made available on the Federal Reserve Board's public Web site at: *http://www.federalreserve.gov/boarddocs/reportforms/review.cfm* or may be requested from the agency clearance officer, whose name appears below.

Michelle Shore, Federal Reserve Board Clearance Officer (202–452–3829), Division of Research and Statistics, Board of Governors of the Federal Reserve System, Washington, DC 20551. Telecommunications Device for the Deaf (TDD) users may contact (202–263–4869).

*Proposal to approve under OMB delegated authority the extension for three years, without revision, of the following report:*

*Report title:* Recordkeeping and Disclosure requirements associated with Regulation V.

*Agency form number:* Regulation V.

*OMB control number:* 7100–0308.

*Frequency:* On occasion.

*Reporters:* Financial institutions.[1]

*Estimated annual reporting hours:* 2,162,864 hours.

*Estimated average time per response:* Negative information notice, 15 minutes. Affiliate marketing opt-out notice, financial institutions 18 hours; consumer response, 5 minutes. Red flags provision, 41 hours. Risk-based pricing notices and disclosures, one-time update, 40 hours; ongoing, 5 hours. Information furnished to consumer reporting agencies, policy & procedures, 40 hours; irrelevant dispute notices 14 minutes.

*Number of respondents:* Negative information notice, 30,000 financial institutions. Affiliate marketing opt-out notice, 2,619 financial institutions; 638,380 consumer response. Red flags provision, 1,172 financial institutions. Risk-based pricing notice and disclosure, one-time update, 18,173 financial institutions; ongoing, 18,173 financial institutions. Information furnished to consumer reporting agencies, policy & procedures, 1,172 financial institutions; irrelevant dispute notices 611,966.

*General description of report:* This information collection is authorized pursuant to the Fair Credit Reporting Act (FCRA) (15 U.S.C. 1681b, 1681c, 1681m, and 1681s–2 and 1681s–3). The obligation to comply with the notice and disclosure requirements of Regulation V is mandatory. Because the records are maintained at state member banks and the notices are not provided to the Federal Reserve, no issue of confidentiality arises under the Freedom of Information Act.

*Abstract:* Regulation V contains several requirements that impose information collection requirements. Under the negative information notice provisions of the FCRA, financial institutions that (1) extend credit and regularly in the ordinary course of business furnish information to a nationwide consumer reporting agency (CRA) and (2) furnish negative information to a CRA regarding credit extended to a customer must provide a clear and conspicuous notice to the customer, in writing, about furnishing this negative information. Regulation V contains model forms developed by the Federal Reserve that financial institutions may use to comply with this notice requirement. Under the affiliate marketing provisions of Regulation V, financial institutions are prohibited from using certain information received from an affiliate to make a solicitation to a consumer unless the consumer is given notice and a reasonable opportunity to opt out of such solicitations, and the consumer does not opt out. Under the Red Flags provisions of Regulation V, financial institutions are required to develop and implement a written identity theft prevention program to detect, prevent, and mitigate identity theft in connection with the opening of certain accounts or certain

[1] Under section 217, the term "financial institution" is defined broadly to have the same meaning as in the privacy provisions of the Gramm-Leach-Bliley Act of 1999 (GLB Act), which defines financial institution to mean "any institution the business of which is engaging in financial activities as described in section 4(k) of the Bank Holding Company Act of 1956," whether or not affiliated with a bank. 15 U.S.C. 6809(3).

existing accounts. In addition, credit and debit card issuers, under certain circumstances, are required to assess the validity of notifications of changes of address.

Board of Governors of the Federal Reserve System, August 27, 2010.

**Jennifer J. Johnson,**

*Secretary of the Board.*

[FR Doc. 2010–21889 Filed 9–1–10; 8:45 am]

**BILLING CODE 6210–01–P**

## FEDERAL RESERVE SYSTEM

### Change in Bank Control Notices; Acquisition of Shares of Bank or Bank Holding Companies

The notificants listed below have applied under the Change in Bank Control Act (12 U.S.C. 1817(j)) and § 225.41 of the Board's Regulation Y (12 CFR 225.41) to acquire a bank or bank holding company. The factors that are considered in acting on the notices are set forth in paragraph 7 of the Act (12 U.S.C. 1817(j)(7)).

The notices are available for immediate inspection at the Federal Reserve Bank indicated. The notices also will be available for inspection at the office of the Board of Governors. Interested persons may express their views in writing to the Reserve Bank indicated for that notice or to the offices of the Board of Governors. Comments must be received not later than September 20, 2010.

**A. Federal Reserve Bank of Kansas City** (Todd Offenbacker, Assistant Vice President) 1 Memorial Drive, Kansas City, Missouri 64198–0001:

*1. Daniel L. Tanner, Canon City, Colorado,* to acquire control of Canon Bank Corporation, parent of Canon National Bank, both of Canon City, Colorado.

Board of Governors of the Federal Reserve System, August 30, 2010.

**Robert deV. Frierson,**

*Deputy Secretary of the Board.*

[FR Doc. 2010–21951 Filed 9–1–10; 8:45 am]

**BILLING CODE 6210–01–S**

## FEDERAL TRADE COMMISSION

**[File No. 092 3199]**

### Reverb Communications, Inc.; Analysis of Proposed Consent Order To Aid Public Comment

**AGENCY:** Federal Trade Commission.

**ACTION:** Proposed Consent Agreement.

**SUMMARY:** The consent agreement in this matter settles alleged violations of federal law prohibiting unfair or deceptive acts or practices or unfair methods of competition. The attached Analysis to Aid Public Comment describes both the allegations in the draft complaint and the terms of the consent order — embodied in the consent agreement — that would settle these allegations.

**DATES:** Comments must be received on or before September 27, 2010.

**ADDRESSES:** Interested parties are invited to submit written comments electronically or in paper form. Comments should refer to "Reverb, Inc., File No. 092 3199" to facilitate the organization of comments. Please note that your comment — including your name and your state — will be placed on the public record of this proceeding, including on the publicly accessible FTC website, at (*http://www.ftc.gov/os/publiccomments.shtm*).

Because comments will be made public, they should not include any sensitive personal information, such as an individual's Social Security Number; date of birth; driver's license number or other state identification number, or foreign country equivalent; passport number; financial account number; or credit or debit card number. Comments also should not include any sensitive health information, such as medical records or other individually identifiable health information. In addition, comments should not include any "[t]rade secret or any commercial or financial information which is obtained from any person and which is privileged or confidential. . . .," as provided in Section 6(f) of the FTC Act, 15 U.S.C. 46(f), and Commission Rule 4.10(a)(2), 16 CFR 4.10(a)(2). Comments containing material for which confidential treatment is requested must be filed in paper form, must be clearly labeled "Confidential," and must comply with FTC Rule 4.9(c), 16 CFR 4.9(c).[1]

Because paper mail addressed to the FTC is subject to delay due to heightened security screening, please consider submitting your comments in electronic form. Comments filed in electronic form should be submitted by using the following weblink: (*https://ftcpublic.commentworks.com/ftc/reverb*) and following the instructions on the web-based form. To ensure that the Commission considers an electronic comment, you must file it on the web-based form at the weblink: (*https://ftcpublic.commentworks.com/ftc/reverb*). If this Notice appears at (*http://www.regulations.gov/search/index.jsp*), you may also file an electronic comment through that website. The Commission will consider all comments that regulations.gov forwards to it. You may also visit the FTC website at (*http://www.ftc.gov/*) to read the Notice and the news release describing it.

A comment filed in paper form should include the "Reverb, Inc., File No. 092 3199" reference both in the text and on the envelope, and should be mailed or delivered to the following address: Federal Trade Commission, Office of the Secretary, Room H-135 (Annex D), 600 Pennsylvania Avenue, NW, Washington, DC 20580. The FTC is requesting that any comment filed in paper form be sent by courier or overnight service, if possible, because U.S. postal mail in the Washington area and at the Commission is subject to delay due to heightened security precautions.

The Federal Trade Commission Act ("FTC Act") and other laws the Commission administers permit the collection of public comments to consider and use in this proceeding as appropriate. The Commission will consider all timely and responsive public comments that it receives, whether filed in paper or electronic form. Comments received will be available to the public on the FTC website, to the extent practicable, at (*http://www.ftc.gov/os/publiccomments.shtm*). As a matter of discretion, the Commission makes every effort to remove home contact information for individuals from the public comments it receives before placing those comments on the FTC website. More information, including routine uses permitted by the Privacy Act, may be found in the FTC's privacy policy, at (*http://www.ftc.gov/ftc/privacy.shtm*).

**FOR FURTHER INFORMATION CONTACT:** Stacey Ferguson (202-326-2361), Bureau of Consumer Protection, 600 Pennsylvania Avenue, NW, Washington, D.C. 20580.

**SUPPLEMENTARY INFORMATION:** Pursuant to section 6(f) of the Federal Trade Commission Act, 38 Stat. 721, 15 U.S.C. 46(f), and § 2.34 the Commission Rules of Practice, 16 CFR 2.34, notice is hereby given that the above-captioned consent agreement containing a consent order to cease and desist, having been filed with and accepted, subject to final approval, by the Commission, has been placed on the public record for a period

[1] The comment must be accompanied by an explicit request for confidential treatment, including the factual and legal basis for the request, and must identify the specific portions of the comment to be withheld from the public record. The request will be granted or denied by the Commission's General Counsel, consistent with applicable law and the public interest. *See* FTC Rule 4.9(c), 16 CFR 4.9(c).

of thirty (30) days. The following Analysis to Aid Public Comment describes the terms of the consent agreement, and the allegations in the complaint. An electronic copy of the full text of the consent agreement package can be obtained from the FTC Home Page (for August 26, 2010), on the World Wide Web, at (*http://www.ftc.gov/os/actions.shtm*). A paper copy can be obtained from the FTC Public Reference Room, Room 130-H, 600 Pennsylvania Avenue, NW, Washington, D.C. 20580, either in person or by calling (202) 326-2222.

Public comments are invited, and may be filed with the Commission in either paper or electronic form. All comments should be filed as prescribed in the **ADDRESSES** section above, and must be received on or before the date specified in the **DATES** section.

**Analysis of Agreement Containing Consent Order to Aid Public Comment**

The Federal Trade Commission ("FTC" or "Commission") has accepted, subject to final approval, an agreement containing a consent order from Reverb Communications, Inc. and Tracie Snitker, 100% owner and the only officer and director of the corporation ("respondents").

The proposed consent order ("proposed order") has been placed on the public record for thirty (30) days for receipt of comments by interested persons. Comments received during this period will become part of the public record. After thirty (30) days, the Commission will again review the agreement and the comments received, and will decide whether it should withdraw from the agreement and take appropriate action or make final the agreement's proposed order.

This matter involves the public relations, marketing, and sales services that respondents provided to companies that developed video game applications. The Commission's complaint alleges that, from November 2008 through May 2009, respondents' employees, posing as ordinary consumers, posted positive product reviews online for their clients' gaming applications. These postings did not disclose the compensated nature of the relationship between the reviewers and the publishers of the gaming applications. The complaint alleges that the respondents violated Section 5 by misrepresenting that reviews of certain gaming applications were those of independent, ordinary consumers. The complaint further alleges that the respondents violated Section 5 by failing to disclose the material connections between the product reviewers and the sellers of the reviewed products.

Part I of the proposed order prohibits the respondents, in connection with the advertising of any product or service, from misrepresenting their status as independent users or ordinary consumers of that product or service.

Part II prohibits the respondents from making any representation about any user or endorser of a product or service unless they disclose, clearly and prominently, a material connection, when one exists, between the user or endorser of the product or service and any other party involved in promoting that product or service. The proposed order defines "material connection" as any relationship that materially affects the weight or credibility of any endorsement and would not be reasonably expected by consumers.

Part III requires the respondents to take all reasonable steps to remove, with seven days of service of the order, any previously posted endorsements that do not comply with Parts I and II of the order.

Parts IV through IX of the proposed order require respondents: to keep copies of relevant consumer complaints and inquiries, documents demonstrating order compliance, and any documents relating to any representation covered by this order; to provide copies of the order to certain of their personnel; to notify the Commission of changes in corporate structure that might affect compliance obligations under the order; to notify the Commission of changes in corporate business or employment as to proposed respondent Tracie Snitker individually; and to file compliance reports with the Commission. Part IX provides that the order will terminate after twenty (20) years, with certain exceptions.

The purpose of this analysis is to facilitate public comment on the proposed order, and it is not intended to constitute an official interpretation of the agreement and proposed order or to modify in any way their terms.

By direction of the Commission.

**Richard C. Donohue**

*Acting Secretary.*

[FR Doc. 2010–21949 Filed 9–1–10; 8:45 am]

**BILLING CODE 6750–01–S**

## DEPARTMENT OF HEALTH AND HUMAN SERVICES

### Food and Drug Administration

**[Docket No. FDA–2010–E–0061]**

### Determination of Regulatory Review Period for Purposes of Patent Extension; ONGLYZA

*Correction*

In notice document 2010–21583 beginning on page 53315 in the issue of Tuesday, August 31, 2010, make the following correction:

On page 53316, in the second column, in the fifth line from the top, "[*insert date 180 days after date of publication in the* **Federal Register**]" should read "February 28, 2011".

[FR Doc. C1–2010–21583 Filed 9–1–10; 8:45 am]

**BILLING CODE 1505–01–D**

## DEPARTMENT OF HEALTH AND HUMAN SERVICES

### Food and Drug Administration

**[Docket No. FDA–2009–E–0084]**

### Determination of Regulatory Review Period for Purposes of Patent Extension; PRISTIQ

*Correction*

In notice document 2010–21586 beginning on page 53314 in the issue of Tuesday, August 31, 2010, make the following correction:

On page 53315, in the second column, in the first full paragraph, in the twelfth through fourteenth lines, "[*insert date 180 days after date of publication in the* **Federal Register**]" should read "February 28, 2011".

[FR Doc. C1–2010–21586 Filed 9–1–10; 8:45 am]

**BILLING CODE 1505–01–D**

## DEPARTMENT OF HEALTH AND HUMAN SERVICES

### Administration for Children and Families

### Office of Community Services: Notice To Award an Expansion Supplement

**AGENCY:** Office of Community Services (OCS), ACF, HHS.

**ACTION:** Notice to award an expansion supplement under the American Recovery and Reinvestment Act of 2009 (ARRA) for Training and Technical Assistance (T/TA) by Community Action Partnership (CAP).

*CFDA Number:* 93.710.

*Legislative Authority:* The legislative authority for this grant is provided by

the American Recovery and Reinvestment Act of 2009 (Pub. L. 111–5). Additional legislative authority and requirements are provided in Sections 674(b)(2)(A) and 678A of the Community Services Block Grant (CSBG) Act, as amended (42 U.S.C. 9903(b)(2)(A) and 9913).

*Amount of Award:* $250,000.

*Project Period:* August 15, 2010 through August 14, 2011.

**SUMMARY:** The Administration for Children and Families (ACF), Office of Community Services (OCS) has awarded an expansion supplement to Community Action Partnership (CAP), located in Washington, DC. The project is designed to support Training and Technical Assistance (T/TA) by strengthening the ability of the Community Action Network to comply with and carry out the programs funded by the American Recovery and Reinvestment Act of 2009 (ARRA). The project objective is to strengthen CSBG-eligible entity administrative governance and financial management efforts related to job creation and new initiatives that target careers in energy efficiency and other environmentally beneficial fields. It will do so by implementing a coordinated strategy that: (1) Promotes exemplary practices applicable to ARRA and "regular" CSBG funds; (2) addresses long-term assistance needs; and (3) collects, develops, and disseminates resources related to job creation and careers related to energy efficiency and environmentally beneficial fields. The project resources developed by CAP will promote accountability and help CSBG-eligible entities and States enhance the overall administration of ARRA-funded programs. These resources include online interactive tutorials, including case studies; guidebooks for CSBG-eligible entity management and board members; online database of exemplary practices, including products and curricula; conference workshops focused on project implementation and facilitated through professional consultations and peer assistance sessions; and online toolkit(s).

The T/TA CAP will provide under this award is particularly critical at this time due to the large temporary increase in CSBG funding to CSBG-eligible entities and the need to ensure adherence to high standards of accountability and tracking of the funds and results. The activities funded by this expansion supplement expand upon prior activities provided by CAP under its cooperative agreement. A new grant award number will be issued to allow CAP to track and report separately on expenditures from funds made available by ARRA.

**FOR FURTHER INFORMATION CONTACT:** Danielle Williams, U.S. Department of Health and Human Services, Office of Community Services, Administration for Children and Families, 370 L'Enfant Promenade, SW., Washington, DC 20047, Telephone: (202) 205–4717, E-mail: *Danielle.Williams@acf.hhs.gov.*

Dated: August 26, 2010.

**Yolanda J. Butler,**

*Acting Director, Office of Community Services.*

[FR Doc. 2010–21983 Filed 9–1–10; 8:45 am]

**BILLING CODE 4184–27–P**

---

## DEPARTMENT OF HEALTH AND HUMAN SERVICES

### Administration for Children and Families

### Office of Community Services; Expansion Supplements Under 2009 American Recovery and Reinvestment Act

**AGENCY:** Office of Community Services (OCS), ACF, HHS.

**ACTION:** Notice to award an expansion supplement under the American Recovery and Reinvestment Act of 2009 (ARRA) for Training and Technical Assistance (T/TA) by National Association for State Community Services Programs (NASCSP).

*CFDA Number:* 93.710.

*Legislative Authority:* The legislative authority for this grant is provided by the American Recovery and Reinvestment Act of 2009 (Pub. L. 111–5). Additional legislative authority and requirements are provided in Sections 674(b)(2)(A) and 678A of the Community Services Block Grant (CSBG) Act, as amended (42 U.S.C. 9903(b)(2)(A) and 9913).

*Amount of Award:* $250,000.

*Project Period:* August 15, 2010 through August 14, 2011.

**SUMMARY:** The Administration for Children and Families (ACF), Office of Community Services (OCS) has awarded an expansion supplement to National Association for State Community Services Programs (NASCSP), located in Washington, DC. The project is designed to support T/TA that strengthens the ability of the Community Action Network to comply with and carry out the programs funded by the American Recovery and Reinvestment Act of 2009 (ARRA). The project objective is to strengthen CSBG-eligible entity efforts related to benefits enrollment and coordination activities and asset development activities. It will do so by: (1) Assessing the CSBG Network's current benefits enrollment and coordination activities; (2) assessing the CSBG Network's asset development activities; and (3) identifying and promulgating exemplary practices in benefits enrollment and coordination activities and asset development activities. The project resources will promote accountability and help CSBG-eligible entities and States enhance the overall administration of ARRA-funded programs. These resources include issue briefs; congressional reports; a catalog of exemplary practices; webinars and/or conference calls; conference workshops focused on resources related to benefits enrollment and coordination activities and asset development activities; and online toolkit(s). The T/TA NASCSP will provide under this award is particularly critical at this time due to the large temporary increase in CSBG funding to CSBG-eligible entities and the need to ensure adherence to high standards of accountability and tracking of the funds and results. The activities funded by this expansion supplement expand upon prior activities provided by NASCSP under their cooperative agreement. A new grant award number will be issued to allow NASCSP to track and report separately on expenditures from funds made available by ARRA.

**FOR FURTHER INFORMATION CONTACT:** Danielle Williams, U.S. Department of Health and Human Services, Office of Community Services, Administration for Children and Families, 370 L'Enfant Promenade, SW., Washington, DC 20047, *Telephone:* (202) 205–4717, *E-mail: Danielle.Williams@acf.hhs.gov.*

Dated: August 26, 2010.

**Yolanda J. Butler,**

*Acting Director, Office of Community Services.*

[FR Doc. 2010–21982 Filed 9–1–10; 8:45 am]

**BILLING CODE 4184–27–P**

---

## DEPARTMENT OF HEALTH AND HUMAN SERVICES

### Administration for Children and Families

### Notice To Award an Expansion Supplement

**AGENCY:** Office of Community Services (OCS), ACF, HHS.

**ACTION:** Notice to award an expansion supplement under the American Recovery and Reinvestment Act of 2009 (ARRA) for Training and Technical Assistance (T/TA) by Community

Action Program Legal Services, Inc. (CAPLAW).

*CFDA Number:* 93.710.

*Legislative Authority:* The legislative authority for this grant is provided by the American Recovery and Reinvestment Act of 2009 (Pub. L. 111–5). Additional legislative authority and requirements are provided in Sections 674(b)(2)(A) and 678A of the Community Services Block Grant (CSBG) Act, as amended (42 U.S.C. 9903(b)(2)(A) and 9913).

*Amount of Award:* $219,445.

*Project Period:* August 15, 2010 through August 14, 2011.

**SUMMARY:** The Administration for Children and Families (ACF), Office of Community Services (OCS) has awarded a single source expansion supplement to Community Action Program Legal Services, Inc. (CAPLAW), located in Boston, MA. The project is designed to support T/TA that strengthens the ability of the Community Action Network to comply with and carry out the programs funded by ARRA. The objectives of the project are to: (1) clarify CSBG policy issues, and (2) strengthen CSBG-eligible entity governance and accountability. It will do so by analyzing CSBG policy issues needing clarification, as identified by OCS; developing policy recommendations to address CSBG policy issues applicable to ARRA and "regular" CSBG funds; and responding to the legal, financial, and management T/TA needs among the recipients of CSBG ARRA funds. The project resources developed by CAPLAW, Inc. will promote accountability and help CSBG-eligible entities and States enhance the overall administration of ARRA-funded programs. These resources include issue-specific T/TA and individualized financial consultation; online interactive tutorials; financial network conference calls; online governance and financial management toolkit(s); and T/TA on CSBG ARRA guidance via webinars and audio conferences. The T/TA CAPLAW, Inc. will provide under this award is particularly critical at this time due to the large temporary increase in CSBG funding to CSBG-eligible entities and the need to ensure adherence to high standards of accountability and tracking of the funds and results. The activities funded by this single source expansion supplement expand upon prior activities provided by CAPLAW under their cooperative agreement. A new grant award number will be issued to allow CAPLAW to track and report separately on expenditures from funds made available by ARRA.

**FOR FURTHER INFORMATION CONTACT:** Danielle Williams, U.S. Department of Health and Human Services, Office of Community Services, Administration for Children and Families, 370 L'Enfant Promenade, SW., Washington, DC 20047, Telephone: (202) 205–4717, E-mail: *Danielle.Williams@acf.hhs.gov.*

Dated: August 26, 2010.

**Yolanda J. Butler,**

*Acting Director, Office of Community Services.*

[FR Doc. 2010–21977 Filed 9–1–10; 8:45 am]

**BILLING CODE 4184–27–P**

## DEPARTMENT OF HEALTH AND HUMAN SERVICES

### Food and Drug Administration

**[Docket No. FDA–2007–D–0367]**

### Guidance for Industry and Food and Drug Administration Staff; Impact-Resistant Lenses: Questions and Answers; Availability

**AGENCY:** Food and Drug Administration, HHS.

**ACTION:** Notice.

**SUMMARY:** The Food and Drug Administration (FDA) is announcing the availability of the guidance entitled "Impact-Resistant Lenses: Questions and Answers." This guidance document answers manufacturer, importer, and consumer questions on impact-resistant lenses, including questions on test procedures, lens testing apparatus, record maintenance, and exemptions to testing.

**DATES:** Submit either electronic or written comments on this guidance at any time. General comments on agency guidance documents are welcome at any time.

**ADDRESSES:** Submit written requests for single copies of the guidance document entitled "Impact-Resistant Lenses: Questions and Answers" to the Division of Small Manufacturers, International, and Consumer Assistance, Center for Devices and Radiological Health, Food and Drug Administration, 10903 New Hampshire Ave., Bldg. 66. rm. 4613, Silver Spring, MD 20993–0002. Send one self-addressed adhesive label to assist that office in processing your request, or fax your request to 301–847–8149. See the **SUPPLEMENTARY INFORMATION** section for information on electronic access to the guidance.

Submit electronic comments on the guidance to *http://www.regulations.gov.* Submit written comments to the Division of Dockets Management (HFA–305), Food and Drug Administration, 5630 Fishers Lane, rm. 1061, Rockville, MD 20852. Identify comments with the docket number found in brackets in the heading of this document.

**FOR FURTHER INFORMATION CONTACT:** John Stigi, Center for Devices and Radiological Health, Food and Drug Administration, 10903 New Hampshire Ave., Bldg. 66, rm. 4622, Silver Spring, MD 20993–0002, 301–796–5848.

**SUPPLEMENTARY INFORMATION:**

### I. Background

To reduce the number of eye injuries, eyeglasses and sunglasses must be fitted with impact-resistant lenses capable of withstanding the impact test described under 21 CFR 801.410(d)(2). This guidance answers questions for manufacturers, importers, and testing laboratories on such topics as test procedures, lens testing apparatus, record maintenance, and exemptions to testing. This document also contains more detailed and updated discussions of (1) lens blanks, (2) semi-finished, finished, and plano lenses, and (3) import entry inspections.

The draft version of this document was announced in the **Federal Register** of October 26, 2007 (72 FR 60862). Interested persons were invited to comment by January 24, 2008. FDA received numerous comments from laboratories, trade associations, retail establishments, and consumers surrounding three main issues. FDA further clarified the definition of "manufacturer" according to the Quality System regulation (21 CFR 820.3(o)). Additionally, based on data provided in the comments, FDA eliminated a question regarding the salability of plastic prescription lenses tested as part of a statistical sample. FDA also modified several questions which had indicated that the testing of all lenses had to be done after edging to clarify that all plastic prescription lenses and glass over-the-counter lenses could be tested in either "un-cut finished" or "finished" form.

This guidance supersedes "Impact-Resistant Lenses: Questions and Answers" (FDA 87–4002), issued September 1987.

### II. Significance of Guidance

This guidance is being issued consistent with FDA's good guidance practices regulation (21 CFR 10.115). The guidance represents the agency's current thinking on impact-resistant lenses. It does not create or confer any rights for or on any person and does not operate to bind FDA or the public. An alternative approach may be used if such approach satisfies the

requirements of the applicable statute and regulations.

### III. Electronic Access

Persons interested in obtaining a copy of the guidance may do so by using the Internet. To receive "Impact-Resistant Lenses: Questions and Answers," you may either send an e-mail request to *dsmica@fda.hhs.gov* to receive an electronic copy of the document or send a fax request to 301–847–8149 to receive a hard copy. Please use the document number (23) to identify the guidance you are requesting. A search capability for all CDRH guidance documents is available at *http://www.fda.gov/MedicalDevices/DeviceRegulationandGuidance/GuidanceDocuments/default.htm*. Guidance documents are also available at *http://www.regulations.gov*.

### IV. Paperwork Reduction Act of 1995

This guidance refers to previously approved collections of information found in FDA regulations. These collections of information are subject to review by the Office of Management and Budget (OMB) under the Paperwork Reduction Act of 1995 (44 U.S.C. 3501–3520). The collections of information in 21 CFR 801.109 have been approved under OMB Control No. 0910–0485; the collections of information in 21 CFR 807.87 have been approved under OMB Control No. 0910–0120; and the collections of information in 21 CFR Part 820 have been approved under OMB Control No. 0910–0073.

### V. Comments

Interested persons may submit to the Division of Dockets Management (see **ADDRESSES**) either electronic or written comments regarding this document. It is only necessary to send one set of comments. It is no longer necessary to send two copies of mailed comments. Identify comments with the docket number found in brackets in the heading of this document. Received comments may be seen in the Division of Dockets Management between 9 a.m. and 4 p.m., Monday through Friday.

Dated: August 27, 2010.

**Nancy K. Stade,**

*Deputy Director for Policy, Center for Devices and Radiological Health.*

[FR Doc. 2010–21908 Filed 9–1–10; 8:45 am]

**BILLING CODE 4160–01–S**

## DEPARTMENT OF HEALTH AND HUMAN SERVICES

### Food and Drug Administration

**[Docket No. FDA–2010–D–0435]**

## Guidance for Industry; Small Entities Compliance Guide—The Index of Legally Marketed Unapproved New Animal Drugs for Minor Species; Availability

**AGENCY:** Food and Drug Administration, HHS.

**ACTION:** Notice.

**SUMMARY:** The Food and Drug Administration (FDA) is announcing the availability of a Level 2 guidance for industry #201 entitled "Small Entities Compliance Guide—The Index of Legally Marketed Unapproved New Animal Drugs for Minor Species." This small entities compliance guide aids industry in complying with the requirements of the final rule that published in the **Federal Register** of December 6, 2007. This regulation establishes administrative procedures and criteria for index listing a new animal drug for use in a minor species as provided by the Minor Use and Minor Species Animal Health Act of 2004 (MUMS).

**DATES:** Submit either electronic or written comments on Agency guidances at any time.

**ADDRESSES:** Submit written requests for single copies of the guidance to the Communications Staff (HFV–12), Center for Veterinary Medicine, Food and Drug Administration, 7519 Standish Pl., Rockville, MD 20855. Send one self-addressed adhesive label to assist that office in processing your requests. See the **SUPPLEMENTARY INFORMATION** section for electronic access to the guidance document.

Submit electronic comments on the guidance to *http://www.regulations.gov*. Submit written comments to the Division of Dockets Management (HFA–305), Food and Drug Administration, 5630 Fishers Lane, rm. 1061, Rockville, MD 20852.

**FOR FURTHER INFORMATION CONTACT:** Joan Gotthardt, Center for Veterinary Medicine (HFV–50), Food and Drug Administration, 7500 Standish Pl., MPN2, rm. N371, Rockville, MD 20855, 240–276–9090, email: *Joan.gotthardt@fda.hhs.gov*.

**SUPPLEMENTARY INFORMATION:**

### I. Background

FDA is announcing the availability of a Level 2 guidance for industry #201 entitled "Small Entities Compliance Guide—The Index of Legally Marketed Unapproved New Animal Drugs for Minor Species." This guidance aids industry in complying with the requirements of the final rule published in the **Federal Register** of December 6, 2007 (72 FR 69108) (the indexing regulation).

FDA has prepared this guidance in accordance with section 212 of the Small Business Regulatory Enforcement Fairness Act (Public Law 104–121). This document is intended to provide guidance to small businesses on the requirements of section 572 of the MUMS act. Congress, in enacting MUMS, sought to encourage the development of animal drugs that are currently unavailable to minor species (species other than cattle, horses, swine, chickens, turkeys, dogs, and cats) in the United States or to major species afflicted with uncommon diseases or conditions (minor uses). The indexing regulation establishes procedures and criteria for index listing a new animal drug for use in a minor species.

### II. Significance of Guidance

This level 2 guidance is being issued consistent with FDA's good guidance practices regulation (21 CFR 10.115). The guidance represents the Agency's current thinking on this topic. It does not create or confer any rights for or on any person and does not operate to bind FDA or the public. An alternative approach may be used if such approach satisfies the requirements of the applicable statutes and regulations.

### III. Paperwork Reduction Act of 1995

This guidance refers to previously approved collections of information found in FDA regulations. These collections of information are subject to review by the Office of Management and Budget (OMB) under the Paperwork Reduction Act of 1995 (44 U.S.C. 3501–3520). The collections of information in section 572 of the MUMS act have been approved under OMB Control No. 0910–0620.

### IV. Comments

Interested persons may submit to the Division of Dockets Management (see **ADDRESSES**) either electronic or written comments regarding this document. It is only necessary to send one set of comments. It is no longer necessary to send two copies of mailed comments. Identify comments with the docket number found in brackets in the heading of this document. Received comments may be seen in the Division of Dockets Management between 9 a.m. and 4 p.m., Monday through Friday.

### V. Electronic Access

Persons with access to the Internet may obtain the guidance at either *http://www.fda.gov/AnimalVeterinary/default.htm* or *http://www.regulations.gov*.

Dated: August 30, 2010.

**Leslie Kux,**

*Acting Assistant Commissioner for Policy.*

[FR Doc. 2010–21981 Filed 9–1–10; 8:45 am]

BILLING CODE 4160–01–S

---

## DEPARTMENT OF HEALTH AND HUMAN SERVICES

### Food and Drug Administration

**[Docket No. FDA–2010–D–0432]**

## Guidance for Industry; Small Entities Compliance Guide—Designation of New Animal Drugs for Minor Uses or Minor Species; Availability

**AGENCY:** Food and Drug Administration, HHS.

**ACTION:** Notice.

**SUMMARY:** The Food and Drug Administration (FDA) is announcing the availability of a guidance for industry #200 entitled "Small Entities Compliance Guide—Designation of New Animal Drugs for Minor Uses or Minor Species." This small entities compliance guide (SECG) aids industry in complying with the requirements of the final rule that published in the **Federal Register** of July 26, 2007. The Minor Use and Minor Species Animal Health Act of 2004 (MUMS act) establishes new regulatory procedures that provide incentives intended to make more drugs legally available to veterinarians and animal owners for the treatment of minor animal species and uncommon diseases in major animal species.

**DATES:** Submit either electronic or written comments on the SECG at any time.

**ADDRESSES:** Submit written requests for single copies of the SECG to the Communications Staff (HFV–12), Center for Veterinary Medicine, Food and Drug Administration, 7519 Standish Pl., Rockville, MD 20855. Send one self-addressed adhesive label to assist that office in processing your requests. See the **SUPPLEMENTARY INFORMATION** section for electronic access to the SECG.

Submit electronic comments on the SECG to *http://www.regulations.gov*. Submit written comments to the Division of Dockets Management (HFA–305), Food and Drug Administration, 5630 Fishers Lane, rm. 1061, Rockville, MD 20852.

**FOR FURTHER INFORMATION CONTACT:** Meg Oeller, Center for Veterinary Medicine (HFV–50), Food and Drug Administration, 7500 Standish Pl., Rockville, MD 20855, 240–276–9090, *Margaret.oeller@fda.hhs.gov*.

**SUPPLEMENTARY INFORMATION:**

### I. Background

FDA is announcing the availability of an SECG #200 entitled "Small Entities Compliance Guide—Designation of New Animal Drugs for Minor Uses or Minor Species." This SECG aids industry in complying with the requirements of the final rule published in the **Federal Register** of July 26, 2007 (72 FR 41010).

FDA has prepared this SECG in accordance with section 212 of the Small Business Regulatory Enforcement Fairness Act (Public Law 104–121). This document is intended to provide guidance to small businesses on the requirements of section 573 of the MUMS act. In enacting MUMS, Congress sought to encourage the development of animal drugs that are currently unavailable to minor species (species other than cattle, horses, swine, chickens, turkeys, dogs, and cats) in the United States or to major species afflicted with uncommon diseases or conditions (minor uses). These regulations describe the procedures for designating a new animal drug as a minor use or minor species drug. Such designation establishes eligibility for the incentives provided by the MUMS act.

### II. Significance of Guidance

FDA is issuing this SECG as a level 2 guidance consistent with FDA's good guidance practices regulation (21 CFR 10.115). The guidance represents the agency's current thinking on this topic. It does not create or confer any rights for or on any person and does not operate to bind FDA or the public. An alternative approach may be used if such approach satisfies the requirements of the applicable statutes and regulations.

### III. Paperwork Reduction Act of 1995

This SECG refers to previously approved collections of information found in FDA regulations. These collections of information are subject to review by the Office of Management and Budget (OMB) under the Paperwork Reduction Act of 1995 (44 U.S.C. 3501–3520). The collections of information in section 573 of the MUMS act have been approved under OMB control no. 0910–0605.

### IV. Comments

Submit written requests for single copies of the guidance to the Communications Staff (HFV–12), Center for Veterinary Medicine, Food and Drug Administration, 7519 Standish Pl., Rockville, MD 20855. Send one self-addressed adhesive label to assist that office in processing your requests.

Interested persons may submit to the Division of Dockets Management (see **ADDRESSES**) either electronic or written comments regarding this document. It is only necessary to send one set of comments. It is no longer necessary to send two copies of mailed comments. Identify comments with the docket number found in brackets in the heading of this document. Received comments may be seen in the Division of Dockets Management between 9 a.m. and 4 p.m., Monday through Friday.

### V. Electronic Access

Persons with access to the Internet may obtain the SECG at either *http://www.fda.gov/cvm* or *http://www.regulations.gov*.

Dated: August 30, 2010.

**Leslie Kux,**

*Acting Assistant Commissioner for Policy.*

[FR Doc. 2010–21980 Filed 9–1–10; 8:45 am]

BILLING CODE 4160–01–S

---

## DEPARTMENT OF HEALTH AND HUMAN SERVICES

### Food and Drug Administration

**[Docket No. FDA–2009–D–0574]**

## International Conference on Harmonisation; Guidance on Q4B Evaluation and Recommendation of Pharmacopoeial Texts for Use in the International Conference on Harmonisation Regions; Annex 12 on Analytical Sieving General Chapter; Availability

**AGENCY:** Food and Drug Administration, HHS.

**ACTION:** Notice.

**SUMMARY:** The Food and Drug Administration (FDA) is announcing the availability of a guidance entitled "Q4B Evaluation and Recommendation of Pharmacopoeial Texts for Use in the ICH Regions; Annex 12: Analytical Sieving General Chapter." The guidance was prepared under the auspices of the International Conference on Harmonisation of Technical Requirements for Registration of Pharmaceuticals for Human Use (ICH). The guidance provides the results of the ICH Q4B evaluation of the Analytical Sieving General Chapter harmonized text from each of the three pharmacopoeias (United States, European, and Japanese) represented by

the Pharmacopoeial Discussion Group (PDG). The guidance conveys recognition of the three pharmacopoeial methods by the three ICH regulatory regions and provides specific information regarding the recognition. The guidance is intended to recognize the interchangeability between the local regional pharmacopoeias, thus avoiding redundant testing in favor of a common testing strategy in each regulatory region. This guidance is in the form of an annex to the core guidance on the Q4B process entitled "Q4B Evaluation and Recommendation of Pharmacopoeial Texts for Use in the ICH Regions" (the core ICH Q4B guidance).

**DATES:** Submit either electronic or written comments on agency guidances at any time.

**ADDRESSES:** Submit written requests for single copies of the guidance to the Division of Drug Information (HFD–240), Center for Drug Evaluation and Research, Food and Drug Administration, 10903 New Hampshire Ave., Bldg. 51, rm. 2201, Silver Spring, MD 20993–0002, or the Office of Communication, Outreach and Development (HFM–40), Center for Biologics Evaluation and Research (CBER), Food and Drug Administration, 1401 Rockville Pike, suite 200N, Rockville, MD 20852–1448. Send one self-addressed adhesive label to assist the office in processing your requests. The guidance may also be obtained by mail by calling CBER at 1–800–835–4709 or 301–827–1800. See the **SUPPLEMENTARY INFORMATION** section for electronic access to the guidance document.

Submit electronic comments on the guidance to *http://www.regulations.gov*. Submit written comments to the Division of Dockets Management (HFA–305), Food and Drug Administration, 5630 Fishers Lane, rm. 1061, Rockville, MD 20852.

**FOR FURTHER INFORMATION CONTACT:**

*Regarding the guidance*: Robert H. King, Sr., Center for Drug Evaluation and Research (HFD–003), Food and Drug Administration, 10903 New Hampshire Ave., Bldg. 51, rm. 4150, Silver Spring, MD 20993–0002, 301–796–1242, or

Christopher Joneckis, Center for Biologics Evaluation and Research (HFM–25), Food and Drug Administration, 1401 Rockville Pike, suite 200N, Rockville, MD 20852–1448, 301–827–0373.

*Regarding the ICH*: Michelle Limoli, Office of International Programs (HFG–1), Food and Drug Administration, 5600 Fishers Lane, Rockville, MD 20857, 301–827–4480.

**SUPPLEMENTARY INFORMATION:**

## I. Background

In recent years, many important initiatives have been undertaken by regulatory authorities and industry associations to promote international harmonization of regulatory requirements. FDA has participated in many meetings designed to enhance harmonization and is committed to seeking scientifically based harmonized technical procedures for pharmaceutical development. One of the goals of harmonization is to identify and then reduce differences in technical requirements for drug development among regulatory agencies.

ICH was organized to provide an opportunity for tripartite harmonization initiatives to be developed with input from both regulatory and industry representatives. FDA also seeks input from consumer representatives and others. ICH is concerned with harmonization of technical requirements for the registration of pharmaceutical products among three regions: The European Union, Japan, and the United States. The six ICH sponsors are the European Commission; the European Federation of Pharmaceutical Industries Associations; the Japanese Ministry of Health, Labour, and Welfare; the Japanese Pharmaceutical Manufacturers Association; the Centers for Drug Evaluation and Research and Biologics Evaluation and Research, FDA; and the Pharmaceutical Research and Manufacturers of America. The ICH Secretariat, which coordinates the preparation of documentation, is provided by the International Federation of Pharmaceutical Manufacturers Associations (IFPMA).

The ICH Steering Committee includes representatives from each of the ICH sponsors and the IFPMA, as well as observers from the World Health Organization, Health Canada, and the European Free Trade Area.

In the **Federal Register** of December 17, 2009 (74 FR 66982), FDA published a notice announcing the availability of a draft tripartite guidance entitled "Q4B Evaluation and Recommendation of Pharmacopoeial Texts for Use in the ICH Regions; Annex 12: Analytical Sieving General Chapter." The notice gave interested persons an opportunity to submit comments by February 16, 2010.

After consideration of the comments received and revisions to the guidance, a final draft guidance entitled "Q4B Evaluation and Recommendation of Pharmacopoeial Texts for Use in the ICH Regions; Annex 12: Analytical Sieving General Chapter" was submitted to the ICH Steering Committee and endorsed by the three participating regulatory agencies in June 2010.

The guidance provides the specific evaluation outcome from the ICH Q4B process for the Analytical Sieving General Chapter harmonization proposal originating from the three-party PDG. This guidance is in the form of an annex to the core ICH Q4B guidance made available in the **Federal Register** of February 21, 2008 (73 FR 9575). When implemented, the annex will provide guidance for industry and regulators on the use of the specific pharmacopoeial texts evaluated by the ICH Q4B process. Following receipt of comments on the draft, no substantive changes were made to the annex.

This guidance is being issued consistent with FDA's good guidance practices regulation (21 CFR 10.115). The guidance represents the agency's current thinking on this topic. It does not create or confer any rights for or on any person and does not operate to bind FDA or the public. An alternative approach may be used if such approach satisfies the requirements of the applicable statutes and regulations.

## II. Comments

Interested persons may submit to the Division of Dockets Management (see **ADDRESSES**) either electronic or written comments regarding this document. It is only necessary to send one set of comments. It is no longer necessary to send two copies of mailed comments. Identify comments with the docket number found in brackets in the heading of this document. Received comments may be seen in the Division of Dockets Management between 9 a.m. and 4 p.m., Monday through Friday.

## III. Electronic Access

Persons with access to the Internet may obtain the document at *http://www.regulations.gov*, *http://www.fda.gov/Drugs/GuidanceComplianceRegulatoryInformation/Guidances/default.htm*, or *http://www.fda.gov/BiologicsBloodVaccines/GuidanceComplianceRegulatoryInformation/Guidances/default.htm*.

Dated: August 30, 2010.

**Leslie Kux,**

*Acting Assistant Commissioner for Policy.*

[FR Doc. 2010–21979 Filed 9–1–10; 8:45 am]

BILLING CODE 4160–01–S

## DEPARTMENT OF HEALTH AND HUMAN SERVICES

### Food and Drug Administration

**[Docket No. FDA–2010–N–0001]**

### Office of Women's Health Update

**AGENCY:** Food and Drug Administration, HHS.

**ACTION:** Notice of meeting.

The Food and Drug Administration (FDA) is announcing the following meeting: Office of Women's Health (OWH) Update. The topics to be discussed are OWH current and future activities in the areas of women's health research and educational outreach.

*Date and Time*: The meeting will be held on Wednesday, September 22, 2010, 8:30 a.m. to 10 a.m.

*Location*: The meeting will be held at the Cohen Building, rm. 5051, 330 Independence Ave. SW., Washington, DC 20201.

*Contact*: Deborah L. Kallgren, Office of Women's Health, Food and Drug Administration, 10903 New Hampshire Ave., Bldg. 32, rm. 2314, Silver Spring, MD 20993–0002, 301–796–9442, FAX: 301–847–8604, email: *deborah.kallgren@fda.hhs.gov.*

*Registration and Requests for Oral Presentations*: There is no registration fee, but seating is limited to 20. Send registration information (including name, title, firm name, address, telephone, and fax number) to the contact person by September 13, 2010.

If you need special accommodations due to a disability, please contact Deborah L. Kallgren at least 7 days in advance.

Dated: August 27, 2010.

**David Dorsey,**

*Acting Deputy Commissioner for Policy, Planning and Budget.*

[FR Doc. 2010–21893 Filed 9–1–10; 8:45 am]

**BILLING CODE 4160–01–S**

## DEPARTMENT OF HEALTH AND HUMAN SERVICES

### Substance Abuse and Mental Health Services Administration

### Advisory Committee for Women's Services; Amendment of Meeting Notice

Pursuant to Public Law 92–463, notice is hereby given of an amendment of the meeting of the Substance Abuse and Mental Health Services Administration's (SAMHSA) Advisory Committee for Women's Services (ACWS) to be held on September 11–12.

Public notice was published in the **Federal Register** on August 26, 2010, Volume 75, Number 165, page 52537, announcing that the ACWS would be convening on September 11–12 at the Town and Country Convention Center in San Diego, California.

The correct dates of the two-day meeting are Sunday, September 12, from 9 a.m. to 12 noon, Pacific Daylight Time and Monday, September 13, from 9 a.m. to 2 p.m., Pacific Daylight Time.

For additional information, contact Nevine Gahed, Designated Federal Official for SAMHSA's ACWS, 1 Choke Cherry Road, Room 8–1016, Rockville, MD 20857, Telephone: 240.276.2331, FAX: 240.276.2251, and E-mail: *nevine.gahed@samhsa.hhs.gov.*

Dated: August 26, 2010.

**Toian Vaughn,**

*Committee Management Officer, Substance Abuse and Mental Health, Services Administration.*

[FR Doc. 2010–21917 Filed 9–1–10; 8:45 am]

**BILLING CODE 4162–20–P**

## DEPARTMENT OF HEALTH AND HUMAN SERVICES

### National Institutes of Health

### National Center on Minority Health and Health Disparities; Notice of Meeting

Pursuant to section 10(a) of the Federal Advisory Committee Act, as amended (5 U.S.C. App.), notice is hereby given of a meeting of the National Advisory Council on Minority Health and Health Disparities.

The meeting will be open to the public as indicated below, with attendance limited to space available. Individuals who plan to attend and need special assistance, such as sign language interpretation or other reasonable accommodations, should notify the Contact Person listed below in advance of the meeting.

The meeting will be closed to the public in accordance with the provisions set forth in sections 552b(c)(4) and 552b(c)(6), Title 5 U.S.C., as amended. The grant applications and/or contract proposals and the discussions could disclose confidential trade secrets or commercial property such as patentable material, and personal information concerning individuals associated with the grant applications and/or contract proposals, the disclosure of which would constitute a clearly unwarranted invasion of personal privacy.

*Name of Committee:* National Advisory Council on Minority Health and Health Disparities.

*Date:* September 14, 2010.

*Closed:* 8 a.m. to 9:30 a.m.

*Agenda:* To review and evaluate grant applications and/or proposals.

*Place:* Doubletree Hotel and Executive Meeting Center, 8120 Wisconsin Avenue, Bethesda, MD 20814.

*Open:* 9:30 a.m. to 5 p.m.

*Agenda:* The agenda will include opening remarks, administrative matters, Director's Report, NIH Health Disparities update, and other business of the Council.

*Place:* Doubletree Hotel and Executive Meeting Center, 8120 Wisconsin Avenue, Bethesda, MD 20814.

*Contact Person:* Donna Brooks, Executive Officer, National Center on Minority Health and Health Disparities, National Institutes of Health, 6707 Democracy Blvd., Suite 800, Bethesda, MD 20892, (301) 435–2135.

Any member of the public interested in presenting oral comments to the committee may notify the Contact Person listed on this notice at least 10 days in advance of the meeting. Interested individuals and representatives of organizations may submit a letter of intent, a brief description of the organization represented, and a short description of the oral presentation. Only one representative of an organization may be allowed to present oral comments and if accepted by the committee, presentations may be limited to five minutes. Both printed and electronic copies are requested for the record. In addition, any interested person may file written comments with the committee by forwarding their statement to the Contact Person listed on this notice. The statement should include the name, address, telephone number and when applicable, the business or professional affiliation of the interested person.

Dated: August 27, 2010.

**Jennifer S. Spaeth,**

*Director, Office of Federal Advisory Committee Policy.*

[FR Doc. 2010–21916 Filed 9–1–10; 8:45 am]

**BILLING CODE 4140–01–P**

## DEPARTMENT OF HEALTH AND HUMAN SERVICES

### Administration for Children and Families

### Administration for Native Americans; Notice of Meeting

**AGENCY:** Department of Health and Human Services, Administration for Children and Families.

**ACTION:** Notice of Tribal Consultation.

**SUMMARY:** The Department of Health and Human Services (HHS), Administration for Children and Families (ACF) will host a tribal consultation to solicit input on the agency's draft tribal consultation policy.

**DATES:** September 29, 2010.

**ADDRESSES:** The Fairfax at Embassy Row, 2100 Massachusetts Ave., NW., Washington, DC 20008.

**FOR FURTHER INFORMATION CONTACT:** Lillian A. Sparks, Commissioner, Administration for Native Americans, at 202–401–5590, by e-mail at *Lillian.sparks@acf.hhs.gov* or by mail at 370 L'Enfant Promenade, SW., 2 West, Washington, DC 20447.

**SUPPLEMENTARY INFORMATION:** On November 5, 2009, President Obama signed the "Memorandum for the Heads of Executive Departments and Agencies on Tribal Consultation." The President stated that his Administration is committed to regular and meaningful consultation and collaboration with tribal officials in policy decisions that have tribal implications, including, as an initial step, through complete and consistent implementation of Executive Order 13175.

The United States has a unique legal and political relationship with Indian tribal governments, established through and confirmed by the Constitution of the United States, treaties, statutes, executive orders, and judicial decisions. In recognition of that special relationship, pursuant to Executive Order 13175 of November 6, 2000, executive departments and agencies are charged with engaging in regular and meaningful consultation and collaboration with tribal officials in the development of Federal policies that have tribal implications, and are responsible for strengthening the government-to-government relationship between the United States and Indian tribes.

HHS has taken its responsibility to comply with Executive Order 13175 very seriously over the past decade; including the initial implementation of a Department-wide policy on tribal consultation and coordination in 1997, and through multiple evaluations and revisions of that policy, most recently in 2008. Many HHS agencies have already developed their own agency-specific consultation policies that complement the Department-wide efforts.

Since 2005, ACF has been working under the guidance of the HHS policy issued in 2005 and updated in 2008. Due to the various programs administered by ACF and the many requests from tribes for consultation for specific programs, as well as specific program mandates for tribal consultation, ACF has decided to create an ACF tribal consultation policy to help ACF program and regional offices better engage Federally Recognized Indian Tribes in the development or revision of policies, regulations and proposed legislation that impact American Indians. ACF firmly believes that to create a good policy, ACF needs input from tribes to ensure that ACF is meeting tribal needs and to establish a partnership that can carry into the future.

Testimonies may be submitted no later than September 21, 2010, to: Lillian Sparks, Commissioner, Administration for Native Americans, 370 L'Enfant Promenade, SW., Washington, DC 20447, *anacommissioner@acf.hhs.gov.*

ACF assembled a Tribal/Federal Workgroup to develop a draft policy and is asking Tribal Leaders to read the draft policy that will be sent to them in a letter prior to the scheduled consultation date. At the consultation session planned for September 29, 2010, ACF is interested in receiving tribal feedback on the policy and in working with tribal representatives to further refine a policy that meets both ACF and tribal needs, and works towards solidifying the partnership between ACF and tribes.

In addition to the tribal consultation session, ACF will be hosting a tribal resources day to provide information about ACF programs, funding opportunities and tools on how to use ACF funding to create comprehensive community programs. The resources day will take place on September 28, 2010, at the same above address. ACF is encouraging tribes to send their tribal planning officers or comparable employee to attend the tribal resources day.

Dated: August 26, 2010.

**David A. Hansell,**

*Acting Assistant Secretary for Children and Families.*

[FR Doc. 2010–21915 Filed 9–1–10; 8:45 am]

**BILLING CODE 4184–34–M**

---

## DEPARTMENT OF HEALTH AND HUMAN SERVICES

### Food and Drug Administration

**[Docket No. FDA–2010–N–0449]**

### Risks and Benefits of Long-Term Use of Nicotine Replacement Therapy Products; Public Workshop; Request for Comments

**AGENCY:** Food and Drug Administration, HHS.

**ACTION:** Notice of public workshop; request for comments.

**SUMMARY:** The Food and Drug Administration (FDA), Center for Drug Evaluation and Research (CDER) is announcing a scientific workshop to solicit feedback on the risks and benefits associated with the long-term use of nicotine replacement therapy (NRT) products. NRT products facilitate smoking cessation by ameliorating the symptoms of nicotine withdrawal and are available as approved nonprescription and prescription drugs. No currently-approved NRT product is intended for use beyond 12 weeks to relieve the acute withdrawal symptoms experienced when quitting smoking.

*Date and Time*: The public workshop will be held on October 26 and 27, 2010, from 8:30 a.m. to 5 p.m.

*Location*: The workshop will be held at the Radisson Hotel, Reagan National Airport, 2020 Jefferson Davis Highway, Arlington, VA 22202, 703–920–8600, FAX: 703–920–2840.

*Contacts*: Mary C. Gross, Center for Drug Evaluation and Research, Food and Drug Administration, 10903 New Hampshire Ave., Bldg. 51, rm. 6178, Silver Spring, MD 20993–0002, 301–796–3519, email: *mary.gross@fda.hhs.gov*; or Dominic Chiapperino, Center for Drug Evaluation and Research, Food and Drug Administration, 10903 New Hampshire Ave., Bldg. 22, rm. 3134, Silver Spring, MD 20993–0002, 301–796–1183, email: *dominic.chiapperino@fda.hhs.gov*.

*Registration to Attend the Workshop and Requests to Participate in Open Public Hearing*: If you wish to attend or testify for the open public hearing, please email your registration to *NRTPublicMeeting@fda.hhs.gov* by October 5, 2010. Those without email access may register by contacting one of the persons listed in the *Contacts* section of the document. Please provide complete contact information for each attendee, including name, title, affiliation, address, email address, and telephone number. Registration is free and will be on a first-come, first-served basis. Early registration is recommended because seating is limited. FDA may limit the number of participants from each organization as well as the total number of participants based on space limitations. Registrants will receive confirmation once they have been accepted for the workshop. Onsite registration on the day of the meeting will be based on space availability. If registration reaches maximum capacity, FDA will post a notice closing meeting registration for the workshop at: *http://www.fda.gov/Drugs/NewsEvents/ucm221185.htm*.

An open public hearing will be held between 1:30 p.m. to 2:30 p.m. on October 27, 2010, during which speaker testimony will be accepted. We will try to accommodate all persons who wish to testify, however, the duration of each

speaker's testimony during this open public hearing may be limited by time constraints.

*Comments*: Submit either electronic or written comments by December 27, 2010. Submit electronic comments to *http://www.regulations.gov*. Submit written comments to the Division of Dockets Management (HFA–305), Food and Drug Administration, 5630 Fishers Lane, rm. 1061, Rockville, MD 20852. It is only necessary to send one set of comments. It is no longer necessary to send two copies of mailed comments. Identify comments with the docket number found in brackets in the heading of this document. Received comments may be seen in the Division of Dockets Management between 9 a.m. and 4 p.m., Monday through Friday.

If you need special accommodations due to a disability, contact Mary Gross or Dominic Chiapperino (see *Contacts*) at least 7 days in advance.

**SUPPLEMENTARY INFORMATION:**

## I. Introduction

Nicotine is the primary addictive substance in tobacco. NRT products are designed to help people stop smoking by supplying controlled amounts of purified nicotine to replace the nicotine derived from smoking. People who use NRT products instead of cigarettes during an attempt to quit smoking obtain nicotine to ease the symptoms associated with quitting, but significantly reduce their exposure to harmful chemicals present in tobacco products and tobacco smoke. NRT products are available over-the-counter (OTC) and by prescription. The labeling for all NRT products recommends that they be used for a short time only (up to 12 weeks) to relieve the acute withdrawal symptoms experienced when quitting smoking. Prescription NRT products are marketed under the brand name Nicotrol and are available as a nasal spray and oral inhaler. OTC NRT products include skin patches (transdermal nicotine patches, various brand names and generics), chewing gum (Nicorette and generics) and lozenges (Commit, Nicorette, and generics).

FDA will explore the following topics during this public workshop:

- What is known about the long-term safety of nicotine from animal studies?
- What is known about the long-term safety of nicotine from human studies?
- What evidence is there that long-term NRT helps people to sustain abstinence from smoking?
- What evidence is there that long-term NRT helps people to sustain reduced smoking levels?
- What evidence is there that using NRT to maintain reduced levels of smoking, rather than complete abstinence, yields clinical benefits?
- What is known about dependence/addiction to NRT products?
- Does the route of administration/speed of onset influence the addiction potential?
- What factors mitigate against abuse/addiction to NRT products and against initiation of NRT products by people who have never used tobacco products previously?

FDA will post the agenda and additional workshop background material approximately 5 days before the workshop at: *http://www.fda.gov/Drugs/NewsEvents/ucm221185.htm*.

## II. Transcripts

Please be advised that approximately 30 days after the public workshop, a transcript will be available. It will be accessible at *http://www.regulations.gov*, and may be viewed at the Division of Dockets Management (see *Comments*). A transcript will also be available in either hardcopy or on CD–ROM, after submission of a Freedom of Information request. Written requests are to be sent to Division of Freedom of Information (HFI–35), Office of Management Programs, Food and Drug Administration, 5600 Fishers Lane, rm. 6–30, Rockville, MD 20857.

Dated: August 27, 2010.

**David Dorsey,**

*Acting Deputy Commissioner for Policy, Planning and Budget.*

[FR Doc. 2010–21894 Filed 9–1–10; 8:45 am]

BILLING CODE 4160–01–S

---

## DEPARTMENT OF HOMELAND SECURITY

### Federal Emergency Management Agency

**[Internal Agency Docket No. FEMA–1934–DR; Docket ID FEMA–2010–0002]**

### Missouri; Amendment No. 1 to Notice of a Major Disaster Declaration

**AGENCY:** Federal Emergency Management Agency, DHS.

**ACTION:** Notice.

**SUMMARY:** This notice amends the notice of a major disaster declaration for the State of Missouri (FEMA–1934–DR), dated August 17, 2010, and related determinations.

**DATES:** *Effective Date:* August 26, 2010.

**FOR FURTHER INFORMATION CONTACT:** Peggy Miller, Recovery Directorate, Federal Emergency Management Agency, 500 C Street, SW., Washington, DC 20472, (202) 646–3886.

**SUPPLEMENTARY INFORMATION:** The notice of a major disaster declaration for the State of Missouri is hereby amended to include the following areas among those areas determined to have been adversely affected by the event declared a major disaster by the President in his declaration of August 17, 2010.

Knox, Linn, Marion, Monroe, Pike, Ralls, and Shelby Counties for Public Assistance.

The following Catalog of Federal Domestic Assistance Numbers (CFDA) are to be used for reporting and drawing funds: 97.030, Community Disaster Loans; 97.031, Cora Brown Fund; 97.032, Crisis Counseling; 97.033, Disaster Legal Services; 97.034, Disaster Unemployment Assistance (DUA); 97.046, Fire Management Assistance Grant; 97.048, Disaster Housing Assistance to Individuals and Households In Presidentially Declared Disaster Areas; 97.049, Presidentially Declared Disaster Assistance—Disaster Housing Operations for Individuals and Households; 97.050, Presidentially Declared Disaster Assistance to Individuals and Households—Other Needs; 97.036, Disaster Grants—Public Assistance (Presidentially Declared Disasters); 97.039, Hazard Mitigation Grant.

**W. Craig Fugate,**

*Administrator, Federal Emergency Management Agency.*

[FR Doc. 2010–21994 Filed 9–1–10; 8:45 am]

BILLING CODE 9111–23–P

---

## DEPARTMENT OF HOMELAND SECURITY

### Federal Emergency Management Agency

**[Internal Agency Docket No. FEMA–1912–DR; Docket ID FEMA–2010–0002]**

### Kentucky; Amendment No. 8 to Notice of a Major Disaster Declaration

**AGENCY:** Federal Emergency Management Agency, DHS.

**ACTION:** Notice.

**SUMMARY:** This notice amends the notice of a major disaster declaration for the Commonwealth of Kentucky (FEMA–1912–DR), dated May 11, 2010, and related determinations.

**DATES:** *Effective Date:* August 19, 2010.

**FOR FURTHER INFORMATION CONTACT:** Peggy Miller, Recovery Directorate, Federal Emergency Management Agency, 500 C Street, SW., Washington, DC 20472, (202) 646–3886.

**SUPPLEMENTARY INFORMATION:** The Federal Emergency Management Agency (FEMA) hereby gives notice that pursuant to the authority vested in the

Administrator, under Executive Order 12148, as amended, Terry L. Quarles, of FEMA is appointed to act as the Federal Coordinating Officer for this disaster.

This action terminates the appointment of Douglas G. Mayne as Federal Coordinating Officer for this disaster.

(The following Catalog of Federal Domestic Assistance Numbers (CFDA) are to be used for reporting and drawing funds: 97.030, Community Disaster Loans; 97.031, Cora Brown Fund; 97.032, Crisis Counseling; 97.033, Disaster Legal Services; 97.034, Disaster Unemployment Assistance (DUA); 97.046, Fire Management Assistance Grant; 97.048, Disaster Housing Assistance to Individuals and Households in Presidentially Declared Disaster Areas; 97.049, Presidentially Declared Disaster Assistance—Disaster Housing Operations for Individuals and Households; 97.050, Presidentially Declared Disaster Assistance to Individuals and Households—Other Needs; 97.036, Disaster Grants—Public Assistance (Presidentially Declared Disasters); 97.039, Hazard Mitigation Grant.)

**W. Craig Fugate,**

*Administrator, Federal Emergency Management Agency.*

[FR Doc. 2010–21900 Filed 9–1–10; 8:45 am]

**BILLING CODE 9111–23–P**

## DEPARTMENT OF HOMELAND SECURITY

### Federal Emergency Management Agency

**[Internal Agency Docket No. FEMA–1925–DR; Docket ID FEMA–2010–0002]**

### Kentucky; Amendment No. 5 to Notice of a Major Disaster Declaration

**AGENCY:** Federal Emergency Management Agency, DHS.

**ACTION:** Notice.

**SUMMARY:** This notice amends the notice of a major disaster declaration for the Commonwealth of Kentucky (FEMA–1925–DR), dated July 23, 2010, and related determinations.

**DATES:** *Effective Date:* August 19, 2010.

**FOR FURTHER INFORMATION CONTACT:** Peggy Miller, Recovery Directorate, Federal Emergency Management Agency, 500 C Street, SW., Washington, DC 20472, (202) 646–3886.

**SUPPLEMENTARY INFORMATION:** The Federal Emergency Management Agency (FEMA) hereby gives notice that pursuant to the authority vested in the Administrator, under Executive Order 12148, as amended, Terry L. Quarles, of FEMA is appointed to act as the Federal Coordinating Officer for this disaster.

This action terminates the appointment of Douglas G. Mayne as Federal Coordinating Officer for this disaster.

(The following Catalog of Federal Domestic Assistance Numbers (CFDA) are to be used for reporting and drawing funds: 97.030, Community Disaster Loans; 97.031, Cora Brown Fund; 97.032, Crisis Counseling; 97.033, Disaster Legal Services; 97.034, Disaster Unemployment Assistance (DUA); 97.046, Fire Management Assistance Grant; 97.048, Disaster Housing Assistance to Individuals and Households in Presidentially Declared Disaster Areas; 97.049, Presidentially Declared Disaster Assistance—Disaster Housing Operations for Individuals and Households; 97.050, Presidentially Declared Disaster Assistance to Individuals and Households—Other Needs; 97.036, Disaster Grants—Public Assistance (Presidentially Declared Disasters); 97.039, Hazard Mitigation Grant.)

**W. Craig Fugate,**

*Administrator, Federal Emergency Management Agency.*

[FR Doc. 2010–21901 Filed 9–1–10; 8:45 am]

**BILLING CODE 9111–23–P**

## DEPARTMENT OF THE INTERIOR

### Fish and Wildlife Service

**[FWS–R1–ES–2010–N133;10120–1113–0000–C4]**

### Endangered and Threatened Wildlife and Plants; 5-Year Status Reviews for Lomatium cookii (Cook's Lomatium) and Limnanthes floccosa ssp. grandiflora (Large-flowered Woolly Meadowfoam)

**AGENCY:** Fish and Wildlife Service, Interior.

**ACTION:** Notice of initiation of reviews; request for information.

**SUMMARY:** We, the U.S. Fish and Wildlife Service, are initiating 5-year reviews for two plant species in Oregon under the Endangered Species Act of 1973, as amended (Act). We request any new information on these species that may have a bearing on their classification as endangered. Based on the results of our 5-year reviews we will determine whether these species are properly classified under the Act.

**DATES:** To ensure consideration in our reviews, we are requesting submission of new information no later than November 1, 2010. However, we will continue to accept new information about any listed species at any time.

**ADDRESSES:** Submit information to: Field Supervisor, Attention: 5-Year Review, U.S. Fish and Wildlife Service, Oregon Fish and Wildlife Office, 2600 SE 98th Avenue, Suite 100, Portland, OR 97266. Information can also be submitted by e-mail to: *fw1or5yearreview@fws.gov.*

**FOR FURTHER INFORMATION CONTACT:** Jeff Dillon, U.S. Fish and Wildlife Service, Oregon Fish and Wildlife Office (*see* **ADDRESSES**), 503–231–6179. Individuals who are hearing impaired or speech impaired may call the Federal Relay Service at (800) 877–8337 for TTY assistance.

**SUPPLEMENTARY INFORMATION:**

#### I. Why do we conduct 5-year reviews?

Under the Act (16 U.S.C. 1531 *et seq.*), we maintain Lists of Endangered and Threatened Wildlife and Plants (which we collectively refer to as the List) in the Code of Federal Regulations (CFR) at 50 CFR 17.11 (for animals) and 17.12 (for plants). Section 4(c)(2)(A) of the Act requires us to review each listed species' status at least once every 5 years. Then, under section 4(c)(2)(B), we determine whether to remove any species from the List (delist), to reclassify it from endangered to threatened, to reclassify it from threatened to endangered, or to conclude that the current listing is appropriate. Any change in Federal classification requires a separate rulemaking process.

We use the following definitions, from 50 CFR 424.02, in our analysis of classification status:

(A) *Species* includes any species or subspecies of fish, wildlife, or plant, and any distinct population segment of any species of vertebrate, that interbreeds when mature;

(B) *Endangered species* means any species that is in danger of extinction throughout all or a significant portion of its range; and

(C) *Threatened species* means any species that is likely to become an endangered species within the foreseeable future throughout all or a significant portion of its range.

Our regulations at 50 CFR 424.21 require that we publish a notice in the **Federal Register** announcing the species we are reviewing.

#### II. What species are under review?

This notice announces our active review of *Lomatium cookii* (Cook's lomatium) and *Limnanthes floccosa* ssp. *grandiflora* (large-flowered woolly meadowfoam). These two plant species occur only in Oregon and were originally listed as endangered on November 7, 2002 (67 FR 68004).

#### III. What information do we consider in the review?

A 5-year review considers all new information available at the time of the

review. In conducting these reviews, we consider the best scientific and commercial data that has become available since the listing determination or most recent status review, such as:

(A) Species biology, including, but not limited to, population trends, distribution, abundance, demographics, and genetics;

(B) Habitat conditions, including, but not limited to, amount, distribution, and suitability;

(C) Conservation measures that have been implemented that benefit the species;

(D) Threat status and trends (*see* five factors under heading "How Do We Determine Whether a Species is Endangered or Threatened?"); and

(E) Other new information, data, or corrections.

**IV. How do we determine whether a species is endangered or threatened?**

Section 4(a)(1) of the Act requires that we determine whether a species is endangered or threatened based on one or more of the five following factors:

(A) The present or threatened destruction, modification, or curtailment of its habitat or range;

(B) Overutilization for commercial, recreational, scientific, or educational purposes;

(C) Disease or predation;

(D) The inadequacy of existing regulatory mechanisms; or

(E) Other natural or manmade factors affecting its continued existence.

Under section 4(b)(1) of the Act, we must base our assessment of these factors solely on the best scientific and commercial data available.

**V. What could happen as a result of this review?**

For each species under review, if we find new information indicating a change in classification is warranted, we may propose a new rule that could do one of the following:

(A) Reclassify the species from endangered to threatened (downlist); or

(B) Remove the species from the List (delist).

If we determine that a change in classification is not warranted, then the species remains on the List under its current status.

**VI. Request for New Information**

To ensure that a 5-year review is complete and based on the best available scientific and commercial information, we request new information from all sources. See "What Information Do We Consider in Our Review?" for specific criteria. If you submit information, please support it with documentation such as maps, bibliographic references, methods used to gather and analyze the data, and/or copies of any pertinent publications, reports, or letters by knowledgeable sources.

If you wish to provide information for any species included in these 5-year reviews, please submit your comments and materials to the Field Supervisor of the appropriate Fish and Wildlife Office (*see* **ADDRESSES** section).

**VII. Public Availability of Comments**

Before including your address, phone number, e-mail address, or other personal identifying information in your comment, you should be aware that your entire comment—including your personal identifying information—may be made publicly available at any time. While you can ask us in your comment to withhold your personal identifying information from public review, we cannot guarantee that we will be able to do so.

Comments and materials received will be available for public inspection, by appointment, during normal business hours at the offices where the comments are submitted.

**VIII. Completed and Active Reviews**

A list of all completed and currently active 5-year reviews addressing species for which the Pacific Region of the Service has lead responsibility is available at: *http://www.fws.gov/pacific/ecoservices/endangered/recovery/5year.html.*

**IX. Authority**

This document is published under the authority of the Endangered Species Act of 1973, as amended (16 U.S.C. 1531 *et seq.*).

Dated: July 19, 2010.

**Theresa E. Rabot,**

*Acting Regional Director, Region 1, Fish and Wildlife Service.*

[FR Doc. 2010–21919 Filed 9–1–10; 8:45 am]

BILLING CODE 4310–55–P

---

## DEPARTMENT OF THE INTERIOR

### National Park Service

### Bison Brucellosis Remote Vaccination, Draft Environmental Impact Statement, Yellowstone National Park, Wyoming

**ACTION:** Reopening of public comment period.

**SUMMARY:** The National Park Service announces the reopening of the public comment period on the Bison Brucellosis Remote Vaccination Draft Environmental Impact Statement. The original comment period was from 28 May 2010 to 26 July 2010. The reopened comment period will end on 24 September 2010. If you submitted comment previously, you do not need to resubmit them. We will also accept any comments that we receive between the original comment period end date of 26 July 2010 and today.

**DATES:** Comments on the Draft Environmental Impact Statement will be accepted through 24 September 2010.

**ADDRESSES:** Submit comments to Yellowstone Center for Resources, Yellowstone National Park, P.O. Box 168, Yellowstone National Park, Wyoming 82190–0168. Copies of the draft EIS are available on the Internet at *http://parkplanning.nps.gov/yell* and at the Center for Resources, 27 Officer's Row, Yellowstone National Park.

**FOR FURTHER INFORMATION CONTACT:** The Bison Ecology and Management Office, Yellowstone National Park, P.O. Box 168, Yellowstone National Park, Wyoming 82190, (307) 344–2213, *YELL_Remote_Vaccine@nps.gov.*

**SUPPLEMENTARY INFORMATION:** The NPS requests comments on the draft EIS from the public, Federal agencies, State agencies, local governments, and tribal governments. If you wish to comment, you may submit your comments by any one of several methods. You may comment via the Internet at *http://parkplanning.nps.gov/yell.* You may also mail comments to the Bison Ecology and Management Office, Center for Resources, P.O. Box 168, Yellowstone National Park, Wyoming 82190. Finally, you may hand-deliver comments to the Center for Resources at 27 Officer's Row in Yellowstone National Park, Wyoming.

Comments will not be accepted by facsimile, electronic mail, or methods other than those specified above. Before including your address, phone number, e-mail address, or other personal identifying information in your comment, you should be aware that your entire comment—including your personal identifying information—may be made publicly available at any time. While you can ask us in your comment to withhold your personal identifying information from public review, we cannot guarantee that we will be able to do so.

Dated: August 24, 2010.

**John Wessels,**

*Regional Director, Intermountain Region.*

[FR Doc. 2010–21902 Filed 9–1–10; 8:45 am]

BILLING CODE 4312–CT–P

## DEPARTMENT OF THE INTERIOR

### National Park Service

### Notice of Availability of the Record of Decision; Elk Management Plan/ Environmental Impact Statement for Theodore Roosevelt National Park

**ACTION:** Notice of Availability of the Record of Decision on the Elk Management Plan/Environmental Impact Statement for Theodore Roosevelt National Park, Billings and McKenzie Counties, ND.

**SUMMARY:** Pursuant to Section 102(2)(C) of the National Environmental Policy Act of 1969 (42 U.S.C. 4332(2)(C)), the National Park Service (NPS) announces the availability of the Record of Decision (ROD) for the Elk Management Plan/Environmental Impact Statement (Plan/EIS) for Theodore Roosevelt National Park (Park), Billings and McKenzie Counties, North Dakota. On June 4, the Midwest Regional Director approved the ROD for the project. As soon as practicable, the NPS will begin to implement the Preferred Alternative contained in the final Plan/EIS.

The NPS will implement the Preferred Alternative, as described in the final Plan/EIS released on March 8, 2010. The Preferred Alternative will make use of skilled public volunteers to assist the Park with culling the elk herd through the use of firearms. The initial reduction phase would reduce the elk herd, now estimated at 1,000 elk, to approximately 200 elk within 5 years, by removing approximately 275 elk per year. Following the initial reduction phase, the Park would take an additional 20 to 24 elk per year for the remaining 10 years of the Plan in order to maintain a consistent population level.

Following each year of the initial reduction phase, the NPS will evaluate the program in order to determine if its population goals are being met. If population goals are being achieved, the park will continue with the use of firearms. Should the park determine that its population goals are not being met following the first two years of the initial reduction phase, it would continue with direct reduction activities but would also have the ability to use a roundup or other capture method and then euthanize and/or translocate elk in order to meet its population objectives. Should the park need to capture animals, whether elk are euthanized or translocated will depend on whether adequate sampling has occurred to meet chronic wasting disease (CWD) surveillance goals, whether CWD is detected in the herd and whether there are willing recipients that can meet all Federal and State requirements to transport and receive live elk.

The ROD includes a statement of the decision made, synopses of other alternatives considered, the basis for the decision, a description of the environmentally preferable alternative, a finding on impairment of park resources and values, a listing of measures to minimize environmental harm, and an overview of public involvement in the decisionmaking process.

**FOR FURTHER INFORMATION CONTACT:** Superintendent Valerie Naylor, Theodore Roosevelt National Park, P.O. Box 7, Medora, North Dakota 58645–0007. You may also view the document via the Internet through the NPS Planning, Environment, and Public Comment Web site (*http://parkplanning.nps.gov*); click on the link to Theodore Roosevelt National Park.

Dated: July 21, 2010.

**Ernest Quintana,**

*Regional Director, Midwest Region.*

[FR Doc. 2010–21903 Filed 9–1–10; 8:45 am]

BILLING CODE 4312–AD–P

## DEPARTMENT OF THE INTERIOR

### Bureau of Land Management

**[LLWYD01000–2010–LL13100000–NB0000–LXSI016K0000]**

### Notice of Field Tours for the Pinedale Anticline Working Group

**AGENCY:** Bureau of Land Management, Interior.

**ACTION:** Notice.

**SUMMARY:** In accordance with the Federal Land Policy and Management Act (1976), the Federal Advisory Committee Act (1972), and the Record of Decision (ROD) for the Pinedale Anticline Project Area (PAPA) 2008 Supplemental Environmental Impact Statement (SEIS), and the Pinedale Anticline Working Group (PAWG) charter, the U.S. Department of the Interior, the Bureau of Land Management (BLM) PAWG will conduct field tours of the Pinedale Anticline Project Area (PAPA). Tours are open to the public.

**DATES:** September 30, 2010, and May 5, 2011, at 12 p.m. MST. Members of the public are asked to RSVP no later than one week prior to each field trip to Shelley Gregory, BLM Pinedale Field Office, P.O. Box 768, Pinedale, WY 82941; 307–367–5328; *shelley_gregory@blm.gov.*

**ADDRESSES:** BLM Pinedale Field Office, 1625 West Pine Street, Pinedale, WY.

**FOR FURTHER INFORMATION CONTACT:** Shelley Gregory, BLM Pinedale Field Office, P.O. Box 768, Pinedale, WY 82941; 307–367–5328; *shelley_gregory@blm.gov.*

**SUPPLEMENTARY INFORMATION:** The PAWG was established by the EIS ROD for the PAPA on July 27, 2000, and carried forward with the release of the ROD for the PAPA SEIS on September 12, 2008.

The PAWG is a Federal Advisory Committee Act group which develops recommendations and provides advice to the BLM on mitigation, monitoring, and adaptive management issues as oil and gas development in the PAPA proceeds. Additional information about the PAWG can be found at: *http://www.blm.gov/wy/st/en/field_offices/pinedale/pawg.html.*

Dated: August 27, 2010.

**Donald A. Simpson,**

*State Director.*

[FR Doc. 2010–21914 Filed 9–1–10; 8:45 am]

BILLING CODE 4310–22–P

## DEPARTMENT OF THE INTERIOR

### Bureau of Land Management

**[LLWYD01000–2009–LL13100000–NB0000–LXSI016K0000]**

### Notice of Rescheduled Meetings of the Pinedale Anticline Working Group

**AGENCY:** Bureau of Land Management, Interior.

**ACTION:** Notice of public meeting.

**SUMMARY:** In accordance with the Federal Land Policy and Management Act (1976) and the Federal Advisory Committee Act (1972), the U.S. Department of the Interior, Bureau of Land Management (BLM) Pinedale Anticline Working Group (PAWG) will conduct meetings in Pinedale, Wyoming. These meetings are open to the public.

**DATES:** The August 26, 2010, September 23, 2010, and October 28, 2010 meetings have been cancelled. The PAWG will meet on the following dates: October 1, 2010, November 4, 2010, February 3, 2011, and May 6, 2011, beginning at 10 a.m. MST.

**ADDRESSES:** BLM Pinedale Field Office, 1625 West Pine Street, Pinedale, WY.

**FOR FURTHER INFORMATION CONTACT:** Shelley Gregory, Bureau of Land Management, Pinedale Field Office, 1625 West Pine Street., P.O. Box 768, Pinedale, WY 82941; 307–367–5328; *shelley_gregory@blm.gov.*

**SUPPLEMENTARY INFORMATION:** The PAWG was established by the Environmental Impact Statement (EIS) Record of Decision (ROD) for the Pinedale Anticline Project Area (PAPA) on July 27, 2000 and carried forward with the release of the ROD for the PAPA Supplemental Environmental Impact Statement (SEIS) on September 12, 2008.

The PAWG is a Federal Advisory Committee Act (FACA) group which develops recommendations and provides advice to the BLM on mitigation, monitoring, and adaptive management issues as oil and gas development in the PAPA proceeds.

Additional information about the PAWG can be found at: *www.blm.gov/wy/st/en/field_offices/pinedale/pawg.html.*

Dated: August 27, 2010.

**Donald A. Simpson,**

*State Director .*

[FR Doc. 2010–21912 Filed 9–1–10; 8:45 am]

**BILLING CODE 4310–22–P**

## DEPARTMENT OF THE INTERIOR

### Bureau of Land Management

**[CA–920–1310–FI; CACA 47609]**

### Notice of Proposed Reinstatement of Terminated Oil and Gas Lease CACA 47609, California

**AGENCY:** Bureau of Land Management, Interior.

**ACTION:** Notice of Proposed Reinstatement of Terminated Oil and Gas Leases

**SUMMARY:** Under the provisions of 30 U.S.C. 188(d) and (e), and 43 CFR 3108.2–3(a) and (b)(1), the Bureau of Land Management (BLM) received a petition for reinstatement of oil and gas lease CACA 47609 from Mirada Petroleum Inc. The petition was filed on time and was accompanied by all required rentals and royalties accruing from August 1, 2009, the date of termination.

**FOR FURTHER INFORMATION CONTACT:** Rita Altamira, Land Law Examiner, Branch of Adjudication, Division of Energy and Minerals, BLM California State Office, 2800 Cottage Way, W–1623, Sacramento, California 95825, (916) 978–4378.

**SUPPLEMENTARY INFORMATION:** No valid lease has been issued affecting the lands. The lessee has agreed to new lease terms for rentals and royalties at rates of $10 per acre or fraction thereof and 16⅔ percent, respectively. The lessee has paid the required $500 administrative fee and has reimbursed the BLM for the cost of this **Federal Register** notice. The Lessee has met all the requirements for reinstatement of the lease as set out in Sections 31(d) and (e) of the Mineral Leasing Act of 1920 (30 U.S.C. 188), and the BLM is proposing to reinstate the lease effective August 1, 2009, subject to the original terms and conditions of the lease and the increased rental and royalty rates cited above.

**Brenda Kidder,**

*Land Law Examiner, Acting, Supervisor, Branch of Adjudication, Division of Energy & Minerals.*

[FR Doc. 2010–21898 Filed 9–1–10; 8:45 am]

**BILLING CODE 4310–40–P**

## DEPARTMENT OF THE INTERIOR

### Bureau of Land Management

**[WY–923–1310–FI; WYW174414]**

### Notice of Proposed Reinstatement of Terminated Oil and Gas Lease, Wyoming

**AGENCY:** Bureau of Land Management, Interior.

**ACTION:** Notice.

**SUMMARY:** Under the provisions of the Mineral Leasing Act of 1920, as amended, the Bureau of Land Management (BLM) received a petition for reinstatement from Royal Oil, LLC for competitive oil and gas lease WYW174414 for land in Niobrara County, Wyoming. The petition was filed on time and was accompanied by all the rentals due since the date the lease terminated under the law.

**FOR FURTHER INFORMATION CONTACT:** Bureau of Land Management, Julie L. Weaver, Chief, Fluid Minerals Adjudication, at (307) 775–6176.

**SUPPLEMENTARY INFORMATION:** The lessee has agreed to the amended lease terms for rentals and royalties at rates of $10 per acre or fraction thereof, per year and 16⅔ percent, respectively. The lessee has paid the required $500 administrative fee and $163 to reimburse the Department for the cost of this **Federal Register** notice. The lessee has met all the requirements for reinstatement of the lease as set out in Sections 31(d) and (e) of the Mineral Lands Leasing Act of 1920 (30 U.S.C. 188), and the Bureau of Land Management is proposing to reinstate lease WYW174414 effective February 1, 2010, under the original terms and conditions of the lease and the increased rental and royalty rates cited above. The BLM has not issued a valid lease to any other interest affecting the lands.

**Julie L. Weaver,**

*Chief, Fluid Minerals Adjudication.*

[FR Doc. 2010–21899 Filed 9–1–10; 8:45 am]

**BILLING CODE 4310–22–P**

## INTERNATIONAL TRADE COMMISSION

### Notice of Receipt of Complaint; Solicitation of Comments Relating to the Public Interest

**AGENCY:** U.S. International Trade Commission.

**ACTION:** Notice.

**SUMMARY:** Notice is hereby given that the U.S. International Trade Commission has received a complaint entitled *In Re Certain Liquid Crystal Display Devices, Including Monitors, Televisions, and Modules, and Components Thereof,* DN 2753; the Commission is soliciting comments on any public interest issues raised by the complaint.

**FOR FURTHER INFORMATION CONTACT:** Marilyn R. Abbott, Secretary to the Commission, U.S. International Trade Commission, 500 E Street, SW., Washington, DC 20436, telephone (202) 205–2000. The public version of the complaint can be accessed on the Commission's electronic docket (EDIS) at *http://edis.usitc.gov,* and will be available for inspection during official business hours (8:45 a.m. to 5:15 p.m.) in the Office of the Secretary, U.S. International Trade Commission, 500 E Street, SW., Washington, DC 20436, telephone (202) 205–2000.

General information concerning the Commission may also be obtained by accessing its Internet server (*http://www.usitc.gov*). The public record for this investigation may be viewed on the Commission's electronic docket (EDIS) at *http://edis.usitc.gov.* Hearing-impaired persons are advised that information on this matter can be obtained by contacting the Commission's TDD terminal on (202) 205–1810.

**SUPPLEMENTARY INFORMATION:** The Commission has received a complaint filed on behalf of Thomson Licensing SAS (TLSAS) and Thomson Licensing, LLC (TLL) on August 27, 2010. The complaint alleges violations of section 337 of the Tariff Act of 1930 (19 U.S.C. 1337) in the importation into the United States, the sale for importation, and the sale within the United States after importation of certain liquid crystal display devices, including monitors,

televisions, and modules, and components thereof. The complaint names as respondents Chimei Innolux Corporation of Miaoli County 350, Taiwan; Innolux Corporation of Austin, TX; Chi Mei Optoelectronics USA, Inc. of San Jose, CA; and MStar Semiconductor, Inc. of Hsinchu Hsien, Taiwan.

The complainant, proposed respondents, other interested parties, and members of the public are invited to file comments, not to exceed five pages in length, on any public interest issues raised by the complaint. Comments should address whether issuance of an exclusion order and/or a cease and desist order in this investigation would negatively affect the public health and welfare in the United States, competitive conditions in the United States economy, the production of like or directly competitive articles in the United States, or United States consumers.

In particular, the Commission is interested in comments that:

(i) Explain how the articles potentially subject to the orders are used in the United States;

(ii) identify any public health, safety, or welfare concerns in the United States relating to the potential orders;

(iii) indicate the extent to which like or directly competitive articles are produced in the United States or are otherwise available in the United States, with respect to the articles potentially subject to the orders; and

(iv) indicate whether Complainant, Complainant's licensees, and/or third party suppliers have the capacity to replace the volume of articles potentially subject to an exclusion order and a cease and desist order within a commercially reasonable time.

Written submissions must be filed no later than by close of business, five business days after the date of publication of this notice in the **Federal Register**. There will be further opportunities for comment on the public interest after the issuance of any final initial determination in this investigation.

Persons filing written submissions must file the original document and 12 true copies thereof on or before the deadlines stated above with the Office of the Secretary. Submissions should refer to the docket number ("Docket No. 2753") in a prominent place on the cover page and/or the first page. The Commission's rules authorize filing submissions with the Secretary by facsimile or electronic means only to the extent permitted by section 201.8 of the rules (see Handbook for Electronic Filing Procedures, *http://www.usitc.gov/secretary/fed_reg_notices/rules/documents/handbook_on_electronic_filing.pdf*). Persons with questions regarding electronic filing should contact the Secretary (202–205–2000).

Any person desiring to submit a document to the Commission in confidence must request confidential treatment. All such requests should be directed to the Secretary to the Commission and must include a full statement of the reasons why the Commission should grant such treatment. *See* 19 CFR 201.6. Documents for which confidential treatment by the Commission is properly sought will be treated accordingly. All nonconfidential written submissions will be available for public inspection at the Office of the Secretary.

This action is taken under the authority of section 337 of the Tariff Act of 1930, as amended (19 U.S.C. 1337), and of sections 201.10 and 210.50(a)(4) of the Commission's Rules of Practice and Procedure (19 CFR 201.10, 210.50(a)(4)).

Issued: August 27, 2010.

By order of the Commission.

**Marilyn R. Abbott,**

*Secretary to the Commission.*

[FR Doc. 2010–21875 Filed 9–1–10; 8:45 am]

**BILLING CODE 7020–02–P**

## DEPARTMENT OF LABOR

### Employment and Training Administration

### Proposed Information Collection Request of the ETA 207, Nonmonetary Determination Activities Report; Comment Request on Extension Without Change (OMB 1205–0150)

**AGENCY:** Employment and Training Administration.

**ACTION:** Notice.

**SUMMARY:** The Department of Labor, as part of its continuing effort to reduce paperwork and respondent burden, conducts a preclearance consultation program to provide the general public and Federal agencies with an opportunity to comment on proposed and/or continuing collection of information in accordance with the Paperwork Reduction Act of 1995 (PRA95) [44 U.S.C. 3506(c)(2)(A)]. This program helps to ensure that requested data can be provided in the desired format, reporting burden (time and financial resources) is minimized, collection instruments are clearly understood, and the impact of collection requirements on respondents can be properly assessed. The current expiration date is November 30, 2010.

A copy of the proposed information collection request (ICR) can be obtained by contacting the office listed below in the addressee section of this notice.

**DATES:** Written comments must be submitted to the office listed in the addressee section below on or before November 1, 2010.

**ADDRESSES:** Send comments to Ericka Parker, U.S. Department of Labor, Employment and Training Administration, Office of Unemployment Insurance, 200 Constitution Avenue, NW., Frances Perkins Bldg. Room S–4531, Washington, DC 20210, telephone number (202)-693–3208 (this is not a toll-free number) or by *e-mail: parker.ericka@dol.gov.*

**SUPPLEMENTARY INFORMATION:**

I. *Background:* The ETA 207 Report, Nonmonetary Determination Activities, contains state data on the number and types of issues that are adjudicated when unemployment insurance (UI) claims are filed. It also has data on the number of disqualifications that are issued for reasons associated with a claimant's separation from employment and reasons related to a claimant's continuing eligibility for benefits. These data are used by the Office of Unemployment Insurance (OUI) to determine workload counts for allocation of administrative funds, to analyze the ratio of disqualifications to determinations, and to examine and evaluate the program effect of nonmonetary activities.

II. *Desired Focus of Comments:* Currently, the Employment and Training Administration is soliciting comments concerning the proposed extension collection of the ETA 207, Nonmonetary Determinations Activities Report. Comments are requested to:

* Evaluate whether the proposed collection of information is necessary to assess performance of the nonmonetary determination function, including whether the information will have practical utility;

* Evaluate the accuracy of the agency's estimate of the burden of the proposed collection of information, including the validity of the methodology and assumptions used;

* Enhance the quality, utility, and clarity of the information to be collected; and

* Minimize the burden of the collection of information on those who are to respond, including the use of appropriate automated, electronic, mechanical, or other technological collection techniques or other forms of

information technology, *e.g.,* permitting electronic submissions of responses.

III. *Current Actions:* The continued collection of the information contained on the ETA 207 report is necessary to enable the OUI to continue evaluating state performance in the nonmonetary determination area and to continue using the data as a key input to the administrative funding process.

*Type of Review:* Extension without change.

*Agency:* Employment and Training Administration (ETA).

*Title:* Nonmonetary Determination Activities Report.

*OMB Number:* 1205–0150.

*Agency Number:* ETA 207.

*Affected Public:* State and Local Governments.

*Total Respondents:* 53.

*Frequency:* Quarterly.

*Total Responses:* 53 respondents × 4 responses per year = 212 responses for the regular program, 53 respondents × 4 responses per year = 212 responses for the Emergency Unemployment Compensation 2008 program, 53 respondents × 4 responses per year = 212 responses for the Federal-State extended benefit program for an estimated total of 636 responses.

*Average Estimated Response Time:* 4 hours.

*Estimated Annual Burden Hours:* 2,544 hours.

*Total Burden Cost (capital/startup):* $0.

*Total Burden Cost (operating/maintaining):* $0.

Comments submitted in response to this notice will be summarized and/or included in the request for Office of Management and Budget approval of the ICR; they will also become a matter of public record.

Dated: August 27, 2010.

**Jane Oates,**

*Assistant Secretary, Employment and Training Administration.*

[FR Doc. 2010–21872 Filed 9–1–10; 8:45 am]

**BILLING CODE 4510–FW–P**

---

## DEPARTMENT OF LABOR

### Employment and Training Administration

### Proposed Information Collection Request of the ETA–5130 Benefit Appeals Report; Comment Request on Extension Without Change (OMB Control No. 1205–0172)

**AGENCY:** Employment and Training Administration.

**ACTION:** Notice.

**SUMMARY:** The Department of Labor, as part of its continuing effort to reduce paperwork and respondent burden, conducts a preclearance consultation program to provide the general public and Federal agencies with an opportunity to comment on proposed and/or continuing collections of information in accordance with the Paperwork Reduction Act of 1995 [44 U.S.C. 3506(c)(2)(A); 3506 (b)(1) (2) (3)]. This program helps to ensure that requested data can be provided in the desired format, reporting burden (time and financial resources) is minimized, collection instruments are clearly understood, and the impact of collection requirements on respondents can be properly assessed.

A copy of the proposed information collection request (ICR) can be obtained by contacting the office listed below in the addressee section of this notice.

**DATES:** Written comments must be submitted to the office listed in the addressee's section below on or before November 1, 2010.

**ADDRESSES:** Send comments to Brian Langley, Office of Unemployment Insurance, Employment and Training Administration, U.S. Department of Labor, Room S–4516, 200 Constitution Avenue, NW., Washington, DC 20210, telephone number (202) 693–3202 (*this is not a toll-free number*) or by e-mail: *Langley.brian@dol.gov.*

**SUPPLEMENTARY INFORMATION:**

### I. Background

The ETA–5130, Benefit Appeals Report, contains information on the number of unemployment insurance appeals and the resultant decisions classified by program, appeals level, cases filed and disposed of (workflow), and decisions by level, appellant, and issue. The data on this report are used by the Department of Labor to monitor the benefit appeals process in the State Workforce Agencies (SWAs) and to develop any needed plans for remedial action. The data are also needed for workload forecasts and to determine administrative funding. If this information were not available, developing problems might not be discovered early enough to allow for timely solutions and avoidance of time consuming and costly corrective action.

### II. Review Focus

Currently, the Employment and Training Administration is soliciting comments concerning the proposed extension collection of the ETA–5130 Benefit Appeals Report, which expires November 30, 2010. Comments are requested to:

* Evaluate whether the proposed collection of information is necessary for the proper performance of the functions of the agency, including whether the information will have practical utility;
* Evaluate the accuracy of the agency's estimate of the burden of the proposed collection of information;
* Enhance the quality, utility, and clarity of the information to be collected; and
* Minimize the burden of the collection of information on those who are to respond, including through the use of automated collection techniques or other forms of information technology.

### III. Current Actions

*Type of Review:* Extension.

*Agency:* Employment and Training Administration.

*Title:* Benefit Appeals Report.

*OMB Number:* 1205–0172.

*Agency Number:* ETA–5130.

*Recordkeeping:* 3-year record retention.

*Affected Public:* State Governments.

*Cite/Reference/Form/etc:* Social Security Act, Section 303(a)(6).

*Total Respondents:* 53.

*Frequency:* Monthly.

*Total Responses:* 53 respondents × 12 responses per year = 636 responses for the regular program, 53 respondents × 12 responses per year = 636 responses for the Emergency Unemployment Compensation 2008 program, 53 respondents × 12 responses per year = 636 responses for the Federal-State extended benefit program for an estimated total of 1,908 responses.

*Average Estimated Response Time:* 1 hour.

*Estimated Annual Burden Hours:* 1,908 hours (636 hours for the ETA 5130 Regular report + 636 hours for the ETA 5130 Federal-State Extended Benefits report + 636 hours for the ETA 5130 Emergency Unemployment Compensation Report).

*Total Burden Cost (capital/startup):* $0.

*Total Burden Cost (operating/maintaining):* $0.

Comments submitted in response to this notice will be summarized and/or included in the request for Office of Management and Budget approval of the ICR; they will also become a matter of public record.

Dated: August 27, 2010.

**Jane Oates,**

*Assistant Secretary, Employment and Training Administration.*

[FR Doc. 2010–21873 Filed 9–1–10; 8:45 am]

**BILLING CODE 4510–FW–P**

## NUCLEAR REGULATORY COMMISSION

**[Docket Nos. 50–338 and 50–339, Docket Nos. 50–280 and 50–281, NRC–2010–0283]**

## Virginia Electric and Power Company North Anna Power Station, Unit Nos. 1 and 2 Surry Power Station, Unit Nos. 1 and 2 Environmental Assessment and Finding of No Significant Impact

The U.S. Nuclear Regulatory Commission (NRC) is considering issuance of an exemption from Title 10 of the *Code of Federal Regulations* (10 CFR), Part 50, Section 50.46 "Acceptance criteria for emergency core cooling systems for light-water nuclear power reactors," and Appendix K to 10 CFR part 50, "ECCS (emergency core cooling system) Evaluation Models," to allow the use of Optimized ZIRLO fuel rod cladding in future core reload applications for North Anna Power Station, Unit Nos. 1 and 2 (NAPS), for Renewed Facility Operating License Nos. NPF–4 and NPF–7, and Surry Power Station, Unit Nos. 1 and 2 (Surry) for Renewed Facility Operating License Nos. DPR–32 and DPR–37, issued to Virginia Electric and Power Company (the licensee), for operation of NAPS and Surry located in Lake Anna, Virginia, and Surry, Virginia, respectively. Therefore, as required by 10 CFR 51.21, the NRC performed an environmental assessment. Based on the results of the environmental assessment, the NRC is issuing a finding of no significant impact.

### Environmental Assessment

*Identification of the Proposed Action*

The proposed action would add Optimized ZIRLO as an acceptable fuel rod cladding materials. The proposed action is in accordance with the licensee's applications dated May 6 (Agencywide Documents Access and Management System (ADAMS) Accession No. ML101260517) and February 10, 2010 (ADAMS Accession No. ML100470738).

*The Need for the Proposed Action*

The proposed action is needed because the regulation in 10 CFR 50.46 contains acceptance criteria for the ECCS for reactors that have fuel rods fabricated either with Zircaloy or ZIRLO. Appendix K to 10 CFR part 50, paragraph I.A.5, requires the Baker-Just equation to be used to predict the rates of energy release, hydrogen concentration, and cladding oxidation for the metal-water reaction. The Baker-Just equation assumed the use of a zirconium alloy different than Optimized ZIRLO; therefore, an exemption is required.

*Environmental Impacts of the Proposed Action*

The NRC has completed its evaluation of the proposed action and concludes that the exemption does not present undue risk to public health and safety, and is consistent with common defense and security.

The proposed action will not significantly increase the probability or consequences of accidents. No changes are being made in the types of effluents that may be released offsite. There is no significant increase in the amount of any effluent released offsite. There is no significant increase in occupational or public radiation exposure. Therefore, there are no significant radiological environmental impacts associated with the proposed action.

Based on the nature of the exemption, the proposed action does not result in changes to land use or water use, or result in changes to the quality or quantity of non-radiological effluents. No changes to the National Pollution Discharge Elimination System permit are needed. No effects on the aquatic or terrestrial habitat in the vicinity of the plant, or to threatened, endangered, or protected species under the Endangered Species Act, or impacts to essential fish habitat covered by the Magnuson-Stevens Act are expected. There are no impacts to the air or ambient air quality. There are no impacts to historic and cultural resources. There would be no noticeable effect on socioeconomic conditions in the region.

Accordingly, the NRC concludes that there are no significant environmental impacts associated with the proposed action.

*Environmental Impacts of the Alternatives to the Proposed Action*

As an alternative to the proposed action, the NRC staff considered denial of the proposed action (*i.e.,* the ''no-action'' alternative). Denial of the application would result in no change in current environmental impacts. The environmental impacts of the proposed action and the alternative action are similar.

*Alternative Use of Resources*

The action does not involve the use of any different resources than those previously considered in the "Final Environmental Statement Related to the Continuation of Construction and the Operation," for NAPS dated April 1973, and Surry dated May 1972 and June 1972, respectively, as supplemented through the "Generic Environmental Impact Statement for License Renewal of Nuclear Plants: Supplements 6 and 7 Regarding Surry and NAPS—Final Report (NUREG–1437, Supplements 6 and 7)," dated November 2002.

*Agencies and Persons Consulted*

In accordance with its stated policy, on May 5, 2010, the staff consulted with the Virginia State official, Leslie P. Foldesi, Director of the Division of Radiological Health, regarding the environmental impact of the proposed action. The State official had no comments.

### Finding of No Significant Impact

On the basis of the environmental assessment, the NRC concludes that the proposed action will not have a significant effect on the quality of the human environment. Accordingly, the NRC has determined not to prepare an environmental impact statement for the proposed action.

For further details with respect to the proposed action, see the licensee's letters dated May 6 and February 10, 2010. Documents may be examined, and/or copied for a fee, at the NRC's Public Document Room (PDR), located at One White Flint North, Public File Area O1 F21, 11555 Rockville Pike (first floor), Rockville, Maryland. Publicly available records will be accessible electronically from the Agencywide Documents Access and Management System (ADAMS) Public Electronic Reading Room on the Internet at the NRC Web site, *http://www.nrc.gov/reading-rm/adams.html.* Persons who do not have access to ADAMS or who encounter problems in accessing the documents located in ADAMS should contact the NRC PDR Reference staff by telephone at 1–800–397–4209 or 301–415–4737, or send an e-mail to *pdr.resource@nrc.gov.*

Dated at Rockville, Maryland, this 26th day of August 2010.

For The Nuclear Regulatory Commission.

**Karen Cotton,**

*Project Manager, Plant Licensing Branch 2–1, Division of Operating Reactor Licensing, Office of Nuclear Reactor Regulation.*

[FR Doc. 2010–21944 Filed 9–1–10; 8:45 am]

BILLING CODE 7590–01–P

## NUCLEAR REGULATORY COMMISSION

**[Docket Nos. 52–025–COL and 52–026–COL; ASLBP No.10–903–01–COL–BD02]**

## Southern Nuclear Operating Company Establishment of Atomic Safety And Licensing Board

Pursuant to delegation by the Commission dated December 29, 1972, published in the **Federal Register**, 37 FR 28,710 (1972), and the Commission's regulations, *see* 10 CFR 2.104, 2.300, 2.303, 2.309, 2.311, 2.318, and 2.321, notice is hereby given that an Atomic Safety and Licensing Board (Board) is being established to preside over the following proceeding:

**Southern Nuclear Operating Company; (Vogtle Electric Generating Plant, Units 3 and 4)**

This proceeding arises from the August 12, 2010 submission of a request for admission of a new contention to challenge the application of Southern Nuclear Operating Company's application for a combined license for Vogtle Electric Generating Plant, Units 3 and 4, to be located in Burke County, Georgia. The request was submitted by the Blue Ridge Environmental Defense League, the Center for a Sustainable Coast, and Georgia Women's Action for New Directions for Clean Energy.[1]

The Board is comprised of the following administrative judges: G. Paul Bollwerk, III, Chairman, Atomic Safety and Licensing Board Panel, U.S. Nuclear Regulatory Commission, Washington, DC 20555–0001.

Nicholas G. Trikouros, Atomic Safety and Licensing Board Panel, U.S. Nuclear Regulatory Commission, Washington, DC 20555–0001.

James F. Jackson, Atomic Safety and Licensing Board Panel, U.S. Nuclear Regulatory Commission, Washington, DC 20555–0001.

All correspondence, documents, and other materials shall be filed in accordance with the NRC E-Filing rule, which the NRC promulgated in August 2007 (72 FR 49,139).

[1] On May 19, 2010, a Board that previously was established to adjudicate the contested portion of this proceeding granted summary disposition in favor of applicant, Southern Nuclear Operating Company, on the only admitted contention. Because that decision was not appealed to the Commission, and because the Commission did not take sua sponte review, the contested proceeding was terminated and the prior Board was divested of jurisdiction, thus necessitating the establishment of the instant Board to consider the August 12, 2010 submission. *See* Commission Order (Aug. 25, 2010) at 1 (unpublished); Licensing Board Memorandum (Referring Request to Admit New Contention to the Commission) (Aug. 17, 2010) at 2–3 (unpublished).

Issued at Rockville, Maryland, this 27th day of August 2010.

**E. Roy Hawkens,**

*Chief Administrative Judge, Atomic Safety and Licensing Board Panel.*

[FR Doc. 2010–21940 Filed 9–1–10; 8:45 am]

BILLING CODE 7590–01–P

## NUCLEAR REGULATORY COMMISSION

**[Docket No. STN 50–530; NRC–2010–0281]**

## Arizona Public Service Company, et al., Palo Verde Nuclear Generating Station, Unit 3; Temporary Exemption

### 1.0 Background

Arizona Public Service Company (APS, the licensee) is the holder of Facility Operating License No. NPF–74, which authorizes operation of the Palo Verde Nuclear Generating Station (PVNGS), Unit 3. The license provides, among other things, that the facility is subject to all rules, regulations, and orders of the Nuclear Regulatory Commission (NRC, the Commission) now or hereafter in effect.

The facility consists of a pressurized-water reactor located in Maricopa County, Arizona.

### 2.0 Request/Action

Pursuant to Title 10 of the *Code of Federal Regulations* (10 CFR), Section 50.12, "Specific exemptions," APS has, by letter dated November 2, 2009, and supplemented by letter dated May 12, 2010 (Agencywide Documents Access and Management System (ADAMS) Accession Nos. ML093160596 and ML101410262, respectively), requested a temporary exemption from 10 CFR 50.46, "Acceptance criteria for emergency core cooling systems for light-water nuclear power reactors," and Appendix K to 10 CFR part 50, "ECCS Evaluation Models," (Appendix K). The regulations in 10 CFR 50.46 contain acceptance criteria for the emergency core cooling system (ECCS) for reactors fueled with zircaloy or ZIRLO cladding. In addition, Appendix K to 10 CFR part 50 requires that the Baker-Just equation be used to predict the rates of energy release, hydrogen concentration, and cladding oxidation from the metal-water reaction. The temporary exemption request relates solely to the specific types of cladding material specified in these regulations. As written, the regulations presume the use of zircaloy or ZIRLO fuel rod cladding. Thus, an exemption from the requirements of 10 CFR 50.46 and Appendix K is needed to irradiate lead fuel assemblies (LFAs) comprised of different cladding alloys at PVNGS, Unit 3.

The temporary exemption requested by the licensee would allow up to eight LFAs manufactured by Westinghouse Electric Company LLC (Westinghouse) with fuel rods clad with Optimized ZIRLO™ to be inserted into the PVNGS, Unit 3, core during the fall 2010 refueling outage. The temporary exemption would allow the LFAs to be used for up to three operating cycles (Cycles 16, 17, and 18).

### 3.0 Discussion

Pursuant to 10 CFR 50.12, the Commission may, upon application by any interested person or upon its own initiative, grant exemptions from the requirements of 10 CFR part 50 when (1) the exemptions are authorized by law, will not present an undue risk to public health or safety, and are consistent with the common defense and security; and (2) when special circumstances are present. Under 10 CFR 50.12(a)(2), special circumstances include, among other things, when application of the specific regulation in the particular circumstance would not serve, or is not necessary to achieve, the underlying purpose of the rule.

*Authorized by Law*

This exemption would allow up to eight LFAs with Optimized ZIRLO™ cladding to be inserted into the PVNGS, Unit 3 reactor core during the fall 2010 refueling outage. It would also allow the LFAs to be used for up to three operating cycles (Cycles 16, 17, and 18). The Optimized ZIRLO™ cladding is of a slightly different material composition than the zircaloy or ZIRLO cladding explicitly identified in 10 CFR 50.46, and implicitly assumed in 10 CFR part 50, Appendix K, for light water reactor fuel. However, the fundamental requirements regarding ECCS performance can still be satisfied by the LFAs with the Optimized ZIRLO™ cladding. As stated above, 10 CFR 50.12 allows the NRC to grant exemptions from the requirements of 10 CFR part 50. The NRC staff has determined that granting of the licensee's proposed exemption will not result in a violation of the Atomic Energy Act of 1954, as amended, or the Commission's regulations. Therefore, the exemption is authorized by law.

*No Undue Risk to Public Health and Safety*

The underlying purpose of 10 CFR 50.46 is to establish acceptance criteria for ECCS performance. Westinghouse topical reports WCAP–16500–P–A, Revision 0, "CE [Combustion Engineering] 16x16 Next Generation Fuel Core Reference Report," dated

August 2007, and WCAP–12610–P–A & CENPD–404–P–A, "Optimized ZIRLO™," dated July 2006, contain the justification to use Optimized ZIRLO™ as a fuel cladding material in addition to Zircaloy-4 and ZIRLO (these topical reports are non-publicly available because they contain proprietary information). The NRC staff approved the use of these topical reports, subject to the conditions stated in the staff's safety evaluations for each. In these topical reports, Westinghouse evaluated the structural and material properties of Optimized ZIRLO™ and determined that the use of Optimized ZIRLO™ as cladding would have either no significant impact or would produce a reduction in corrosion or oxidation and a corresponding reduction in hydrogen pickup. Westinghouse also evaluated the impact of Optimized ZIRLO™ fuel cladding on the LOCA and non-LOCA accident analyses. The evaluations determined that the LOCA analyses for fuel with Optimized ZIRLO™ cladding complied with 10 CFR 50.46, and that there was a negligible difference in the non-LOCA analyses between fuel clad with standard ZIRLO and fuel clad with Optimized ZIRLO™.

The underlying purpose of 10 CFR part 50, Appendix K, Section I.A.5, "Metal-Water Reaction Rate," is to ensure that cladding oxidation and hydrogen generation are appropriately limited during a LOCA and conservatively accounted for in the ECCS evaluation model. Appendix K of 10 CFR part 50 requires that the Baker-Just equation be used in the ECCS evaluation model to determine the rate of energy release, cladding oxidation, and hydrogen generation. Westinghouse has shown in WCAP–12610–P–A that the Baker-Just model is conservative in all post-LOCA scenarios with respect to the use of the Optimized ZIRLO™ advanced alloy as a fuel cladding material.

In its exemption request dated November 2, 2009, APS commits to evaluate the performance of the Next Generation Fuel (NGF) LFAs with Optimized ZIRLO™ cladding with respect to the PVNGS safety analyses. The analyses to be performed as part of that evaluation, which the licensee commits to being due October 30, 2010, shall include thermal hydraulic compatibility, loss-of-coolant accident (LOCA) and non-LOCA criteria, mechanical design, thermal hydraulics, seismic, core physics, and neutronic capability of the NGF LFAs in the PVNGS, Unit 3 reactor core. The thermal-hydraulic compatibility analyses for the LFAs shall include evaluations of departure from nucleate boiling (DNB) performance, guide tube heating, core bypass flow, fuel centerline melt, rod bow, and LOCA. The neutronic compatibility evaluation will compare design characteristics of the LFAs to co-resident fuel to ensure compatibility. Furthermore, APS commits to having a compatibility study performed to ensure that insertion of the LFAs will not cause the remaining Westinghouse fuel to exceed its operating limits and ensure there is no adverse impact on the fuel performance or mechanical integrity. In order to ensure compatibility, the study shall include detailed evaluations in several functional areas, such as structural/seismic analyses, ECCS performance, LOCA dose assessment, thermal hydraulics, and mechanical design. In addition, the evaluations will determine the impact on the analyses of record, if any. The licensee commits to a due date of October 30, 2010, for the compatibility study. In addition, the licensee commits to poolside examinations of the ongoing assembly and cladding performance as detailed in the "Commitments, Conditions, and Limitations" section below.

APS shall place the LFAs in non-limiting power locations where the predicted peak pin power is less than or equal to 0.95 of the predicted cycle maximum peak pin power in the core. Therefore, the LFAs will not contain the lead rod in the core and will have margin relative to cycle maximum peak power. Since the LFAs will not be in the highest core power density locations, their operation will be bounded by the safety analyses performed for the existing fuel assemblies. Additionally, the maximum LFA integrated fuel rod burnup shall be maintained less than or equal to 60 gigawatt days per metric ton uranium.

The PVNGS, Unit 3, temporary exemption request relates solely to the specific types of cladding material specified in the regulations. No new or altered design limits for purposes of 10 CFR part 50, Appendix A, General Design Criterion 10, "Reactor Design," need to be applied or are required for this exemption.

Based on the use of approved models and methods, expected material performance, and the placement of the LFAs in non-limiting core locations, the NRC staff concludes that the irradiation of up to eight LFAs in the PVNGS, Unit 3, core will not result in unsafe operation or violation of specified acceptable fuel design limits. Furthermore, in the event of a design-basis accident, these LFAs will not cause consequences beyond those previously analyzed. Based upon results from experimental data using Optimized ZIRLO™ cladding for its cooling performance, and the results of the calculations of rate of energy release, hydrogen generation, and cladding oxidation from the metal-water reaction, which ensure the applicability of ECCS models and acceptance criteria, and the use of approved LOCA evaluation models to ensure that LFAs satisfy 10 CFR 50.46 acceptance criteria, the NRC staff considers the LFAs acceptable for use in the PVNGS, Unit 3, core as proposed, subject to the additional commitments made by APS.

Based on the above, no new accident precursors are created by allowing the use of the LFAs with Optimized ZIRLO™ cladding material in the PVNGS, Unit 3, core during Operating Cycles 16, 17, and 18. Also, based on the above, the consequences of postulated accidents are not increased. Therefore, there is no undue risk to public health and safety in granting this temporary exemption.

*Consistent With Common Defense and Security*

The proposed exemption would allow the use of up to 8 LFAs with advanced cladding material. This change to the plant has no relation to security issues. Therefore, the common defense and security is not impacted by this exemption.

*Special Circumstances*

Special circumstances, in accordance with 10 CFR 50.12(a)(2)(ii), are present whenever application of the specific regulation in the particular circumstance would not serve, or is not necessary to achieve, the underlying purpose of the rule. The underlying purpose of 10 CFR 50.46 and Appendix K to 10 CFR part 50 is to establish acceptance criteria for ECCS performance. The wording of the regulations in 10 CFR 50.46 and Appendix K is not directly applicable to Optimized ZIRLO™ cladding, even though the evaluations above show that the intent of the regulations is met. Therefore, since the underlying purpose of 10 CFR 50.46 and Appendix K is achieved with the use of the Optimized ZIRLO™ cladding, the special circumstances required by 10 CFR 50.12(a)(2)(ii) for the granting of an exemption exist.

*Commitments, Conditions, and Limitations*

In its letter dated November 2, 2009, the licensee made the following regulatory commitments:

1. Prior to startup for Unit 3 Cycle 17, poolside examinations will be

performed to evaluate ongoing assembly and cladding performance. (Due 4/30/2012)

2. Prior to startup for Unit 3 Cycle 18, poolside examinations will be performed to evaluate ongoing assembly and cladding performance. (Due 10/30/2013)

3. After completion of Unit 3 Cycle 18 (the third and final irradiation cycle), poolside examinations will be performed to evaluate assembly and cladding performance. (Due 6/30/2015)

4. The Westinghouse NGF LFAs will be modeled in the PVNGS core physics models, including the Zirconium diboride integral fuel burnable absorber (IFBA). As such, the impact of the LFAs will be included in the PVNGS cycle-specific core physics calculations supporting the reload effort for each cycle during use of the LFAs. (Due 10/30/2010, 4/30/2012, and 10/30/2013, respectively)

5. Evaluations will verify performance of the Westinghouse NGF LFAs with respect to the safety analysis. The analyses will include thermal-hydraulic compatibility, loss-of-coolant accident (LOCA) and non-LOCA criteria, mechanical design, thermal hydraulic, seismic, core physics, and neutronic compatibility of the LFAs in the PVNGS Unit 3 core. The evaluations will make use of the fact that the LFAs will be operated in non-limiting locations and will verify the reload analyses are not adversely impacted. The results will be documented in a final design report. (Due 10/30/2010)

6. A compatibility study will be performed to ensure that insertion of the Westinghouse NGF LFAs will not cause the remaining Westinghouse fuel to exceed its operating limits and ensure there is no adverse impact on fuel performance or mechanical integrity. The results of the compatibility study will be documented in a final design report. (Due 10/30/2010)

In addition, since APS referenced Westinghouse Topical Report WCAP–12610–P–A & CENPD–404–P–A, Addendum 1–A, "Optimized ZIRLO™," dated July 2006, in its request for the exemption to use LFAs with Optimized ZIRLO™ cladding, the licensee shall ensure compliance with the conditions and limitations listed in Section 5.0 of the NRC staff's Safety Evaluation Report for that report.

### 4.0 Conclusion

Accordingly, the Commission has determined that, pursuant to 10 CFR 50.12, the exemption is authorized by law, will not present an undue risk to the public health and safety, and is consistent with the common defense and security. Also, special circumstances are present. Therefore, the Commission hereby grants APS a temporary exemption from the requirements of 10 CFR 50.46 and Appendix K to allow the use of fuel rods clad with an advanced alloy, Optimized ZIRLO™, in the PVNGS, Unit 3, core in non-limiting locations during Operating Cycles 16, 17, and 18.

Pursuant to 10 CFR 51.32, the Commission has determined that the granting of this exemption will not have a significant effect on the quality of the human environment as published in the **Federal Register** on August 24, 2010 (75 FR 52045).

This exemption is effective upon issuance.

Dated at Rockville, Maryland, this 26th day of August 2010.

For The Nuclear Regulatory Commission.

**Joseph G. Giitter,**

*Director, Division of Operating Reactor Licensing, Office of Nuclear Reactor Regulation.*

[FR Doc. 2010–21942 Filed 9–1–10; 8:45 am]

**BILLING CODE 7590–01–P**

## SECURITIES AND EXCHANGE COMMISSION

### Submission for OMB Review; Comment Request

Upon Written Request, Copies Available From: Securities and Exchange Commission, Office of Investor Education and Advocacy, Washington, DC 20549–0213.

*Extension:*

Rule 15Ba2–1 and Form MSD; SEC File No. 270–0088; OMB Control No. 3235–0083.

Notice is hereby given that pursuant to the Paperwork Reduction Act of 1995 (44 U.S.C. 3501 *et seq.*), the Securities and Exchange Commission ("Commission") has submitted to the Office of Management and Budget a request for extension of the previously approved collection of information provided for in Rule 15Ba2–1 (17 CFR 240.15Ba2–1) under the Securities Exchange Act of 1934 ("Exchange Act") (17 U.S.C. 78a *et seq.*)

Rule 15Ba2–1 provides that an application for registration with the Commission by a bank municipal securities dealer must be filed on Form MSD (17 CFR 249.1100). The Commission uses the information contained in Form MSD to determine whether bank municipal securities dealers meet the standards for registration set forth in the Exchange Act, to develop a central registry where members of the public may obtain information about particular bank municipal securities dealers, and to develop statistical information about bank municipal securities dealers.

Based upon past submissions, the staff estimates that approximately 41 respondents will utilize this application procedure annually. The staff estimates that the average number of hours necessary to comply with the requirements of Rule 15Ba2–1 is 1.5 hours per respondent, for a total burden of 61.5 hours. The average cost per hour is approximately $67. Therefore, the total cost of compliance for the respondents is approximately $4,120.

Rule 15Ba2–1 does not contain an explicit recordkeeping requirement, but the rule does require the prompt correction of any information on Form MSD that becomes inaccurate, meaning that bank municipal securities dealers need to maintain a current copy of Form MSD indefinitely. Providing the information on the application is mandatory in order to register with the Commission as a bank municipal securities dealer. The information contained in the application will not be kept confidential. An agency may not conduct or sponsor, and a person is not required to respond to, a collection of information unless it displays a currently valid control number.

Comments should be directed to: (i) Desk Officer for the Securities and Exchange Commission, Office of Information and Regulatory Affairs, Office of Management and Budget, Room 10102, New Executive Office Building, Washington, DC 20503 or send an e-mail to: *Sagufta_Ahmed@omb.eop.gov* and (ii) Charles Boucher, Director/Chief Information Officer, Securities and Exchange Commission, c/o Remi Pavlik-Simon, 6432 General Green Way, Alexandria, VA 22312 or send an e-mail to: *PRA_Mailbox@sec.gov.* Comments must be submitted to OMB within 30 days of this notice.

Dated: August 27, 2010.

**Florence E. Harmon,**

*Deputy Secretary.*

[FR Doc. 2010–21935 Filed 9–1–10; 8:45 am]

**BILLING CODE 8010–01–P**

## SECURITIES AND EXCHANGE COMMISSION

### Submission for OMB Review; Comment Request

Upon Written Request, Copies Available From: Securities and Exchange Commission, Office of Investor Education and Advocacy, Washington, DC 20549–0213.

Extension:

Rule 15Bc3–1 and Form MSDW; SEC File No. 270–93; OMB Control No. 3235–0087.

Notice is hereby given that, pursuant to the Paperwork Reduction Act of 1995 (44 U.S.C. 3501 *et seq.*), the Securities and Exchange Commission ("Commission") has submitted to the Office of Management and Budget ("OMB") a request for approval of extension of the previously approved collection provided for in Rule 15Bc3–1 (17 CFR 240.15Bc3–1) and Form MSDW (17 CFR 249.1110) under the Securities Exchange Act of 1934 ("Exchange Act") (17 U.S.C. 78a *et seq.*).

Rule 15Bc3–1 provides that a notice of withdrawal from registration with the Commission as a bank municipal securities dealer must be filed on Form MSDW. The Commission uses the information submitted on Form MSDW in determining whether it is in the public interest to permit a bank municipal securities dealer to withdraw its registration. This information is also important to the municipal securities dealer's customers and to the public, because it provides, among other things, the name and address of a person to contact regarding any of the municipal securities dealer's unfinished business.

The staff estimates that the average number of hours necessary to comply with the requirements of Rule 15Bc3–1 is 0.5 hours. Based upon submissions for the last three years, the staff estimates that approximately 12 respondents will utilize this notice annually, with a total burden for all respondents of 6 hours. The average cost per hour is approximately $101. Therefore, the total cost of compliance for the respondents is $606 ($101 × 0.5 × 12 = $606).

Providing the information on the application is mandatory in order to register with the Commission as a bank municipal securities dealer. The information contained in the application will not be kept confidential. Persons should note that an agency may not conduct or sponsor, and a person is not required to respond to, a collection of information unless it displays a currently valid control number.

Comments should be directed to: (i) Desk Officer for the Securities and Exchange Commission, Office of Information and Regulatory Affairs, Office of Management and Budget, Room 10102, New Executive Office Building, Washington, DC 20503 or send an e-mail to: *Sagufta_Ahmed@omb.eop.gov* and (ii) Charles Boucher, Director/Chief Information Officer, Securities and Exchange Commission, c/o Remi Pavlik-Simon, 6432 General Green Way, Alexandria, VA 22312 or send an e-mail to: *PRA_Mailbox@sec.gov.* Comments must be submitted to OMB within 30 days of this notice.

Dated: August 27, 2010.

**Florence E. Harmon**

*Deputy Secretary*

[FR Doc. 2010–21936 Filed 9–1–10; 8:45 am]

**BILLING CODE 8010–01–P**

---

## SECURITIES AND EXCHANGE COMMISSION

**[Release No. 34–62784]**

## Notice Regarding the Requirement To Use eXtensible Business Reporting Language Format To Make Publicly Available the Information Required Pursuant to Rule 17g–2(d) of the Exchange Act

**AGENCY:** Securities and Exchange Commission ("Commission").

**ACTION:** Notice.

**SUMMARY:** The Commission is providing notice that the List of XBRL Tags for NRSROs ("List of XBRL Tags") to be used for the ratings history disclosure requirements in paragraph (d) of Rule 17g–2 has been published on the Commission's Internet Web site. An NRSRO subject to the disclosure provisions of paragraph (d) of Rule 17g–2 shall make this information available in an interactive data file on its corporate Internet Web site in XBRL format using the List of XBRL Tags beginning no later than 60 days after the publication of this Notice in the **Federal Register**.

**DATES:** The date an NRSRO is required to begin using an XBRL format and the List of XBRL Tags for the purpose of Rule 17g–2(d) is November 1, 2010.

**FOR FURTHER INFORMATION CONTACT:** Michael A. Macchiaroli, Associate Director, at (202) 551–5525; Thomas K. McGowan, Deputy Associate Director, at (202) 551–5521; Randall W. Roy, Assistant Director, at (202) 551–5522; Raymond A. Lombardo, Branch Chief, at (202) 551–5755; or Rebekah E. Goshorn, Attorney, at (202) 551–5514; Division of Trading and Markets, Securities and Exchange Commission; 100 F Street, NE., Washington, DC 20549–7010.

**SUPPLEMENTARY INFORMATION:** The Credit Rating Agency Reform Act of 2006 ("Rating Agency Act") [1] defined the term "nationally recognized statistical rating organization" ("NRSRO") and provided authority for the Securities and Exchange Commission ("Commission") to implement registration, recordkeeping, financial reporting, and oversight rules with respect to registered credit rating agencies. The regulations implemented by the Commission pursuant to this mandate include Securities Exchange Act of 1934 ("Exchange Act") Rule 17g–2,[2] which requires an NRSRO to make and retain certain records relating to its business and to retain certain other business records made in the normal course of business operations. The Commission adopted Rule 17g–2 and the amendments thereto, in part, under authority to require NRSROs to make and keep for specified periods such records as the Commission prescribes as necessary or appropriate in the public interest, for the protection of investors, or otherwise in furtherance of the purposes of the Exchange Act.[3]

On February 2, 2009, the Commission adopted amendments to its NRSRO rules imposing additional requirements on NRSROs in order to address concerns about the integrity of their credit rating procedures and methodologies.[4] Among other things, the rule amendments added new paragraph (a)(8) and paragraph (d) (now paragraph (d)(2)) to Rule 17g–2. Paragraph (a)(8) of Rule 17g–2 requires an NRSRO to make and retain a record for each outstanding credit rating it maintains showing all rating actions (initial rating, upgrades, downgrades, placements on watch for upgrade or downgrade, and withdrawals) and the date of such actions identified by the name of the security or obligor rated and, if applicable, the CUSIP for the rated security or the Central Index Key (CIK) number for the rated obligor.[5] Paragraph (d)(2) of Rule 17g–2 requires an NRSRO to make publicly available, on a six-month delayed basis, the ratings histories for a random sample of 10% of the credit ratings paid for by the obligor being rated or by the issuer, underwriter, or sponsor of the security being rated ("issuer-paid credit ratings") pursuant to paragraph (a)(8) of Rule 17g–2 for each class of credit rating for which the NRSRO is registered and has issued 500 or more issuer-paid credit ratings.[6]

Paragraph (d)(2) of Rule 17g–2 further requires that this information be made

[1] Public Law 109–291 (2006).

[2] 17 CFR 240.17g–2.

[3] *See* Section 17(a)(1) of the Exchange Act (15 U.S.C. 78q(a)(1)).

[4] *See Amendments to Rules for Nationally Recognized Statistical Rating Organizations,* Exchange Act Release No. 59342 (February 2, 2009), 74 FR 6456 ("February 2009 Adopting Release").

[5] 17 CFR 240.17g–2(a)(8).

[6] 17 CFR 240.17g–2(d).

public on the NRSRO's corporate Internet Web site in eXtensible Business Reporting Language ("XBRL") format.[7] The rule provides that in preparing the XBRL disclosure, an NRSRO must use the List of XBRL Tags as specified on the Commission's Internet Web site.[8] The Commission established a compliance date of August 10, 2009 for this provision. On August 5, 2009, the Commission provided notice that an NRSRO subject to the disclosure provisions of paragraph (d) (now paragraph (d)(2)) of Rule 17g–2 could satisfy the requirement to make publicly available ratings history information in an XBRL format by using an XBRL format or any other machine-readable format, until such time as the Commission provides further notice.[9] The Commission today is providing notice that a List of XBRL Tags has been published on the Commission's Internet Web site and that NRSROs shall commence publishing the information required by Rule 17g–2(d)(2) in XBRL format using the List of the XBRL Tags beginning no later than November 1, 2010.

On November 23, 2009, the Commission further amended Rule 17g–2 to add paragraph (d)(3), which requires that an NRSRO must make publicly available on its corporate Internet Web site ratings action histories for all credit ratings initially determined on or after June 26, 2007 in an interactive data file that uses a machine-readable format.[10] In the case of issuer-paid credit ratings, each new ratings action is required to be reflected in such publicly disclosed histories no later than twelve months after it is taken; in the case of ratings actions that are not issuer-paid, each new ratings action is required to be reflected no later than twenty-four months after it is taken.[11] Rule 17g–2(d)(3) provides that an NRSRO may use any machine-readable format to make this data publicly available until 60 days after the date on which the Commission publishes a List of XBRL Tags for NRSROs on its Internet Web site, at which point the NRSRO is required to make the information available in XBRL format using the List of XBRL Tags for NRSROs as published by the Commission on its Internet Web site.[12] Today, the Commission is providing notice that the List of XBRL Tags has been published on the Commission's Internet Web site.[13]

The publication of the List of XBRL Tags on the Commission's Internet Web site automatically triggers the 60-day time frame for compliance with Rule 17(g)(2)(d)(3) using an XBRL format. However, for purposes of establishing a uniform compliance date for Rule 17g–2(d)(2) and Rule 17g–2(d)(3), the Commission will require that NRSROs make the information required under Rule 17g–2(d)(3) available on its corporate website in XBRL format using the List of XBRL Tags beginning no later than November 1, 2010.

The relief provided by the August 5, 2009 Notice is superseded by this Notice.

Dated: August 27, 2010.

By the Commission.

**Elizabeth M. Murphy,**

*Secretary.*

[FR Doc. 2010–21887 Filed 9–1–10; 8:45 am]

BILLING CODE 8010–01–P

[7] *Id.*

[8] *Id.* The *February 2009 Adopting Release* specified a compliance date of 180 days after publication in the **Federal Register.**

[9] *See* Securities Exchange Release No. 60451 (August 5, 2009) 74 FR 40246 (August 11, 2009) ("August 5, 2009 Notice").

[10] *See* Securities Exchange Release No. 61050 (November 23, 2009) 74 FR 63831 (December 4, 2009) ("November 2009 Adopting Release").

[11] *See* November 2009 Adopting Release at 63834.

[12] *See* November 2009 Adopting Release at 63834.

[13] *See* List of XBRL Tags available at [Web site url].

## SECURITIES AND EXCHANGE COMMISSION

**[Release No. 34–62771; File No. SR–NASDAQ–2010–102]**

## Self-Regulatory Organizations; The NASDAQ Stock Market LLC; Notice of Filing and Immediate Effectiveness of Proposed Rule Change To Amend Rule 2260 To Reflect Changes to Corresponding FINRA Rule

August 26, 2010.

Pursuant to Section 19(b)(1) of the Securities Exchange Act of 1934 ("Act"),[1] and Rule 19b–4 [2] thereunder, notice is hereby given that on August 16, 2010, The NASDAQ Stock Market LLC ("Nasdaq" or the "Exchange") filed with the Securities and Exchange Commission (the "Commission") the proposed rule change as described in Items I and II below, which Items have been prepared by the self-regulatory organization. The Commission is publishing this notice to solicit comments on the proposed rule change from interested persons.

[1] 15 U.S.C. 78s(b)(1).

[2] 17 CFR 240.19b–4.

### I. Self-Regulatory Organization's Statement of the Terms of Substance of the Proposed Rule Change

The Exchange proposes to amend NASDAQ Rule 2260 and IM–2260 to reflect recent changes to a corresponding rule of the Financial Industry Regulatory Authority ("FINRA"). The text of the proposed rule change is available at *http://nasdaq.cchwallstreet.com*, at the Exchange's principal office, at the Commission's Public Reference Room, and on the Commission's Web site at *http://www.sec.gov.*

### II. Self-Regulatory Organization's Statement of the Purpose of, and Statutory Basis for, the Proposed Rule Change

In its filing with the Commission, the Exchange included statements concerning the purpose of and basis for the proposed rule change and discussed any comments it received on the proposed rule change. The text of these statements may be examined at the places specified in Item IV below. The Exchange has prepared summaries, set forth in Sections A, B, and C below, of the most significant aspects of such statements.

*A. Self-Regulatory Organization's Statement of the Purpose of, and Statutory Basis for, the Proposed Rule Change*

1. Purpose

Many of NASDAQ's rules are based on rules of FINRA (formerly the National Association of Securities Dealers ("NASD")). During 2008, FINRA embarked on an extended process of moving rules formerly designated as "NASD Rules" into a consolidated FINRA rulebook. In many cases, FINRA has renumbered these rules, and in some cases has substantively amended them. Accordingly, NASDAQ has initiated a process of modifying its rulebook to ensure that NASDAQ rules corresponding to FINRA/NASD rules continue to mirror them as closely as practicable.

This filing addresses NASDAQ Rule 2260 and IM–2260, which incorporates the guidance previously contained in the corresponding NASD Rules relating to the forwarding of proxy and other materials by members and the rates of reimbursement for such actions. In SR–FINRA–2009–066,[3] FINRA combined NASD Rule 2260 and IM–2260 into FINRA Rule 2251 without material

[3] Securities Exchange Act Release No. 61052 (November 23, 2009), 74 FR 62857 (December 1, 2009) (SR–FINRA–2009–066).

amendment to the substance of the rule. FINRA also made minor clarifying changes and other changes primarily to reflect the new formatting and terminology conventions of the Consolidated FINRA Rulebook.[4] NASDAQ proposes to similarly combine NASDAQ Rule 2260 and IM–2260 into new NASDAQ Rule 2251, which will continue to incorporate the requirements of the corresponding FINRA rule.[5]

2. Statutory Basis

The Exchange believes that the proposed rule change is consistent with the provisions of Section 6 of the Act,[6] in general, and with Section 6(b)(5) of the Act,[7] in particular, in that the proposal is designed to prevent fraudulent and manipulative acts and practices, to promote just and equitable principles of trade, to foster cooperation and coordination with persons engaged in regulating, clearing, settling, processing information with respect to, and facilitating transactions in securities, to remove impediments to and perfect the mechanism of a free and open market and a national market system, and, in general, to protect investors and the public interest. The proposed changes will conform NASDAQ rules to recent changes made to the corresponding FINRA rules, to promote application of consistent regulatory standards.

*B. Self-Regulatory Organization's Statement on Burden on Competition*

The Exchange does not believe that the proposed rule change will result in any burden on competition that is not necessary or appropriate in furtherance of the purposes of the Act, as amended.

*C. Self-Regulatory Organization's Statement on Comments on the Proposed Rule Change Received From Members, Participants or Others*

Written comments were neither solicited nor received.

## III. Date of Effectiveness of the Proposed Rule Change and Timing for Commission Action

The foregoing rule change has become effective pursuant to Section 19(b)(3)(A) of the Act[8] and Rule 19b–4(f)(6)[9] thereunder in that it effects a change that: (i) Does not significantly affect the protection of investors or the public interest; (ii) does not impose any significant burden on competition; and (iii) by its terms, does not become operative for 30 days after the date of the filing, or such shorter time as the Commission may designate if consistent with the protection of investors and the public interest.[10] Nasdaq has requested that the Commission waive the 30-day operative delay.

The Commission has considered the Exchange's request to waive the 30-day operative delay. The Commission believes that waiving the 30-day operative delay is consistent with the protection of investors and the public interest. As noted above, Nasdaq rules cross-reference certain NASD rules that no longer exist, and have been updated in the consolidated FINRA rulebook. The proposed rule change will update certain of the references in the Exchange's rules that are outdated. The Commission also notes that these changes have previously been approved by the Commission for FINRA. The Commission believes that allowing this rule change to become immediately operative will facilitate the purpose of this rule change—namely, to eliminate any potential confusion arising from the existing rule's outdated cross-references. Based on the foregoing, the Commission finds that waiving the 30-day operative delay period is consistent with the protection of investors and the public interest, and the proposal is therefore deemed operative upon filing.[11]

At any time within 60 days of the filing of the proposed rule change, the Commission summarily may temporarily suspend such rule change if it appears to the Commission that such action is necessary or appropriate in the public interest, for the protection of investors, or otherwise in furtherance of the purposes of the Act.

## IV. Solicitation of Comments

Interested persons are invited to submit written data, views, and arguments concerning the foregoing, including whether the proposed rule change is consistent with the Act. Comments may be submitted by any of the following methods:

*Electronic Comments*

- Use the Commission's Internet comment form (*http://www.sec.gov/rules/sro.shtml*); or
- Send an e-mail to *rule-comments@sec.gov.* Please include File Number SR–NASDAQ–2010–102 on the subject line.

*Paper Comments*

- Send paper comments in triplicate to Elizabeth M. Murphy, Secretary, Securities and Exchange Commission, 100 F Street, NE., Washington, DC 20549–1090.

All submissions should refer to File Number SR–NASDAQ–2010–102. This file number should be included on the subject line if e-mail is used. To help the Commission process and review your comments more efficiently, please use only one method. The Commission will post all comments on the Commission's Internet Web site (*http://www.sec.gov/rules/sro.shtml*). Copies of the submission, all subsequent amendments, all written statements with respect to the proposed rule change that are filed with the Commission, and all written communications relating to the proposed rule change between the Commission and any person, other than those that may be withheld from the public in accordance with the provisions of 5 U.S.C. 552, will be available for website viewing and printing in the Commission's Public Reference Room, 100 F Street, NE., Washington, DC 20549, on official business days between the hours of 10 a.m. and 3 p.m. Copies of the filing also will be available for inspection and copying at the principal office of the Exchange. All comments received will be posted without change; the Commission does not edit personal identifying information from submissions. You should submit only information that you wish to make available publicly. All submissions should refer to File Number SR–NASDAQ–2010–102 and should be submitted on or before September 23, 2010.

[4] The Commission notes that, as part of those changes, FINRA deleted references to NASD Rule 2430. Since FINRA Rule 2251 no longer references NASD Rule 2430, and Nasdaq is conforming its rule to reflect the current FINRA rule, Nasdaq is also proposing to delete references to Nasdaq Rule 2430.

[5] NASDAQ intends to make a separate rule filing to incorporate changes required to this Rule by Section 957 of the Dodd-Frank Wall Street Reform and Consumer Protection Act.

[6] 15 U.S.C. 78f.

[7] 15 U.S.C. 78f(b)(5).

[8] 15 U.S.C. 78s(b)(3)(A).

[9] 17 CFR 240.19b–4(f)(6).

[10] 17 CFR 240.19b–4(f)(6). When filing a proposed rule change pursuant to Rule 19b–4(f)(6) under the Act, an Exchange is required to give the Commission written notice of its intent to file the proposed rule change, along with a brief description and text of the proposed rule change, at least five business days prior to the date of filing of the proposed rule change, or such shorter time as designated by the Commission. The Exchange has met this requirement.

[11] For the purposes only of waiving the operative date of this proposal, the Commission has considered the proposed rule's impact on efficiency, competition, and capital formation. *See* 15 U.S.C. 78c(f).

For the Commission, by the Division of Trading and Markets, pursuant to delegated authority.[12]

**Florence E. Harmon,**

*Deputy Secretary.*

[FR Doc. 2010–21929 Filed 9–1–10; 8:45 am]

**BILLING CODE 8010–01–P**

## SECURITIES AND EXCHANGE COMMISSION

**[Release No. 34–62772; File No. SR–ISE–2010–91]**

## Self-Regulatory Organizations; International Securities Exchange, LLC; Notice of Filing of Proposed Rule Change To Adopt a Pilot Program To List Additional Expiration Months for Each Class of Options Opened for Trading on the Exchange

August 26, 2010.

Pursuant to Section 19(b)(1) of the Securities Exchange Act of 1934 (the "Act") [1] and Rule 19b–4 thereunder,[2] notice is hereby given that on August 25, 2010, the International Securities Exchange, LLC (the "Exchange" or "ISE") filed with the Securities and Exchange Commission (the "Commission") the proposed rule change as described in Items I and II below, which Items have been prepared by the Exchange. The Commission is publishing this notice to solicit comments on the proposed rule change from interested persons.

### I. Self-Regulatory Organization's Statement of the Terms of Substance of the Proposed Rule Change

The ISE is proposing to amend its rules to adopt a pilot program to list additional expiration months for each class of options opened for trading on the Exchange. The text of the proposed rule change is provided below (*italics* indicate additions; [brackets] indicate deletions):

**Rule 504. Series of Options Contracts Open for Trading**

* * * * *

**Supplementary Material to Rule 504**

.01–.07 No Change

*.08 Additional Expiration Months Pilot Program ("Pilot Program"). For a Pilot Program expiring on [insert date 12 months from the next full month from approval], the Exchange may select up to 20 options classes for which it may list up to two (2) additional expiration months in addition to the expiration months the Exchange currently lists pursuant to Rule 504(e). Additional expiration months listed pursuant to this Supplementary Material .08 will be the nearest months that were not previously listed. The Exchange may also list additional expiration months for option classes that are selected by other securities exchanges that employ a similar program under their respective rules.*

* * * * *

### II. Self-Regulatory Organization's Statement of the Purpose of, and Statutory Basis for, the Proposed Rule Change

In its filing with the Commission, the self-regulatory organization included statements concerning the purpose of, and basis for, the proposed rule change and discussed any comments it received on the proposed rule change. The text of these statements may be examined at the places specified in Item IV below. The self-regulatory organization has prepared summaries, set forth in sections A, B and C below, of the most significant aspects of such statements.

*A. Self-Regulatory Organization's Statement of the Purpose of, and the Statutory Basis for, the Proposed Rule Change*

1. Purpose

The Exchange proposes to amend its rules to adopt a pilot program to list additional expiration months for each class of options opened for trading on the Exchange.

Pursuant to ISE Rule 504(e), the Exchange currently opens four expiration months for each class of options open for trading on the Exchange: the first two being the two nearest months, regardless of the quarterly cycle on which that class trades; the third and fourth being the next two months of the quarterly cycle previously designated by the Exchange for that specific class. For example, if the Exchange listed in late May a new equity option on a January-April-July-October quarterly cycle, the Exchange would list the two nearest term months (June and July) and the next two expiration months of the cycle (October and January). When the June series expires, the Exchange would add the August series as the next nearest month. And when the July series expire, the Exchange would add the September series as the next month of the cycle.

The Exchange believes that there is market demand for a greater number of expiration months. The Exchange therefore proposes to adopt a pilot program pursuant to which it will list up to an additional two expiration months, for a total of six expiration months for each class of options open for trading on the Exchange. The proposal will become effective on a pilot basis for a period twelve months to commence on the next full month after approval is received to establish the pilot program. Under the proposal, the additional months listed pursuant to the pilot program will result in four consecutive expiration months plus two months from the quarterly cycle. For example, for option classes in the January cycle that have expiration months of June, July, October, and January, the Exchange would additionally list the August and September series. For option classes in the February quarterly cycle that have expiration months of October, November, February and May, the Exchange would additionally list the December and January series. Under the proposal, no additional LEAP series will be created.

The Exchange seeks to limit the proposed rule change to the 20 most actively traded options classes. By limiting the pilot to a small number of classes, the Exchange will be able to gauge interest in the pilot while limiting any additional demands on system resources. ISE estimates that this pilot could add up to six or seven percent to current quote traffic, although changes in market maker quoting behavior will likely reduce that increase by up to half. The Exchange believes that a limited pilot is a prudent step to determine actual market demand for additional expiration months.

If the Exchange were to propose an extension or an expansion of the pilot program, or should the Exchange propose to make the pilot program permanent, ISE will submit, along with any filing proposing such amendments to the pilot program, a pilot program report ("Report") that will provide an analysis of the pilot program covering the first nine months of the pilot program and shall submit the Report to the Commission at least sixty (60) days prior to the expiration date of the pilot program. The Report will include, at a minimum: (1) Data and written analysis on the open interest and trading volume in the classes for which additional expiration months were opened; (2) an assessment of the appropriateness of the option classes selected for the pilot program; (3) an assessment of the impact of the pilot program on the capacity on ISE, OPRA and on market data vendors (to the extent data from market data vendors is available); (4) any capacity problems or other problems that arose during the operation of the pilot program and how

[12] 17 CFR 200.30–3(a)(12).

[1] 15 U.S.C. 78s(b)(1).

[2] 17 CFR 240.19b–4.

ISE addressed such problems; (5) any complaints that ISE received during the operation of the pilot program and how ISE addressed them; and (6) any additional information that would assist the Commission in assessing the operation of the pilot program.

Finally, the Exchange represents that it has the necessary systems capacity to support new options series that will result from the introduction of additional expiration months listed pursuant to this proposed rule change.

2. Statutory Basis

The proposed rule change is consistent with Section 6(b) [3] of the Securities Exchange Act of 1934 (the "Act"), in general, and furthers the objectives of Section 6(b)(5) [4] in particular, in that it is designed to prevent fraudulent and manipulative acts and practices, to promote just and equitable principles of trade, to foster cooperation and coordination with persons engaged in facilitating transactions in securities, and to remove impediments to and perfect the mechanisms of a free and open market and a national market system in a manner consistent with the protection of investors and the public interest. In particular, the Exchange believes listing additional near-term expiration months will offer investors more variety in trading options series that were previously not available. The Exchange believes this proposed rule change will also generate additional volume in these option classes without significantly taxing system resources.

*B. Self-Regulatory Organization's Statement on Burden on Competition*

The proposed rule change does not impose any burden on competition.

*C. Self-Regulatory Organization's Statement on Comments on the Proposed Rule Change Received From Members, Participants, or Others*

The Exchange has not solicited, and does not intend to solicit, comments on this proposed rule change. The Exchange has not received any unsolicited written comments from members or other interested parties.

**III. Date of Effectiveness of the Proposed Rule Change and Timing for Commission Action**

Within 45 days of the date of publication of this notice in the **Federal Register** or within such longer period up to 90 days (i) as the Commission may designate if it finds such longer period to be appropriate and publishes its reasons for so finding or (ii) as to which the self-regulatory organization consents, the Commission will:

(A) By order approve or disapprove such proposed rule change, or

(B) Institute proceedings to determine whether the proposed rule change should be disapproved.

**IV. Solicitation of Comments**

Interested persons are invited to submit written data, views, and arguments concerning the foregoing, including whether the proposed rule change is consistent with the Act. Comments may be submitted by any of the following methods:

*Electronic Comments*

- Use the Commission's Internet comment form (*http://www.sec.gov/rules/sro.shtml);* or
- Send an e-mail to *rule-comments@sec.gov.* Please include File Number SR–ISE–2010–91 on the subject line.

*Paper Comments*

- Send paper comments in triplicate to Elizabeth M. Murphy, Secretary, Securities and Exchange Commission, 100 F Street, NE., Washington, DC 20549–1090.

All submissions should refer to File Number SR–ISE–2010–91. This file number should be included on the subject line if e-mail is used. To help the Commission process and review your comments more efficiently, please use only one method. The Commission will post all comments on the Commission's Internet Web site (*http://www.sec.gov/rules/sro.shtml).* Copies of the submission, all subsequent amendments, all written statements with respect to the proposed rule change that are filed with the Commission, and all written communications relating to the proposed rule change between the Commission and any person, other than those that may be withheld from the public in accordance with the provisions of 5 U.S.C. 552, will be available for Web site viewing and printing in the Commission's Public Reference Room, 100 F Street, NE, Washington, DC 20549, on official business days between the hours of 10 a.m. and 3 p.m. Copies of the filing also will be available for inspection and copying at the principal office of the Exchange. All comments received will be posted without change; the Commission does not edit personal identifying information from submissions. You should submit only information that you wish to make available publicly. All submissions should refer to File Number SR–ISE–2010–91 and should be submitted on or before September 23, 2010.

For the Commission, by the Division of Trading and Markets, pursuant to delegated authority.[5]

**Florence E. Harmon,**

*Deputy Secretary.*

[FR Doc. 2010–21930 Filed 9–1–10; 8:45 am]

**BILLING CODE 8010–01–P**

[3] 15 U.S.C. 78f(b).

[4] 15 U.S.C. 78f(b)(5).

[5] 17 CFR 200.30–3(a)(12).

## SECURITIES AND EXCHANGE COMMISSION

**[Release No. 34–62774; File No. SR–BX–2010–058]**

## Self-Regulatory Organizations; NASDAQ OMX BX, Inc.; Notice of Filing and Immediate Effectiveness of Proposed Rule Change To Amend Rule 2260 To Reflect Changes to Corresponding FINRA Rule

August 26, 2010.

Pursuant to Section 19(b)(1) of the Securities Exchange Act of 1934 ("Act"),[1] and Rule 19b–4 thereunder,[2] notice is hereby given that on August 17, 2010, NASDAQ OMX BX, Inc. (the "Exchange" or "BX") filed with the Securities and Exchange Commission ("Commission") the proposed rule change as described in Items I and II below, which Items have been prepared by the Exchange. The Exchange has designated the proposed rule change as constituting a non-controversial rule change under Rule 19b–4(f)(6) under the Act,[3] which renders the proposal effective upon filing with the Commission. The Commission is publishing this notice to solicit comments on the proposed rule change from interested persons.

**I. Self-Regulatory Organization's Statement of the Terms of Substance of the Proposed Rule Change**

The Exchange proposes to amend BX Rule 2260 and IM–2260 to reflect recent changes to a corresponding rule of the Financial Industry Regulatory Authority ("FINRA"). The text of the proposed rule change is available at *http://nasdaq.cchwallstreet.com*, at the Exchange's principal office, at the Commission's Public Reference Room, and on the Commission's Web site at *http://www.sec.gov.*

[1] 15 U.S.C. 78s(b)(1).

[2] 17 CFR 240.19b–4.

[3] 17 CFR 240.19b–4(f)(6).

## II. Self-Regulatory Organization's Statement of the Purpose of, and Statutory Basis for, the Proposed Rule Change

In its filing with the Commission, the Exchange included statements concerning the purpose of and basis for the proposed rule change and discussed any comments it received on the proposed rule change. The text of these statements may be examined at the places specified in Item IV below. The Exchange has prepared summaries, set forth in Sections A, B, and C below, of the most significant aspects of such statements.

### A. Self-Regulatory Organization's Statement of the Purpose of, and Statutory Basis for, the Proposed Rule Change

1. Purpose

Many of the Exchange's rules are based on rules of FINRA (formerly the National Association of Securities Dealers ("NASD")). During 2008, FINRA embarked on an extended process of moving rules formerly designated as "NASD Rules" into a consolidated FINRA rulebook. In many cases, FINRA has renumbered these rules, and in some cases has substantively amended them. Accordingly, BX has initiated a process of modifying its rulebook to ensure that BX rules corresponding to FINRA/NASD rules continue to mirror them as closely as practicable.

This filing addresses BX Rule 2260 and IM–2260, which incorporates the guidance previously contained in the corresponding NASD Rules relating to the forwarding of proxy and other materials by members and the rates of reimbursement for such actions. In SR–FINRA–2009–066,[4] FINRA combined NASD Rule 2260 and IM–2260 into FINRA Rule 2251 without material amendment to the substance of the rule. FINRA also made minor clarifying changes and other changes primarily to reflect the new formatting and terminology conventions of the Consolidated FINRA Rulebook.[5] The Exchange proposes to similarly combine BX Rule 2260 and IM–2260 into new BX Rule 2251, which will continue to incorporate the requirements of the corresponding FINRA rule.[6]

2. Statutory Basis

The Exchange believes that the proposed rule change is consistent with the provisions of Section 6 of the Act,[7] in general, and with Section 6(b)(5) of the Act,[8] in particular, in that the proposal is designed to prevent fraudulent and manipulative acts and practices, to promote just and equitable principles of trade, to foster cooperation and coordination with persons engaged in regulating, clearing, settling, processing information with respect to, and facilitating transactions in securities, to remove impediments to and perfect the mechanism of a free and open market and a national market system, and, in general, to protect investors and the public interest. The proposed changes will conform the Exchange's rules to recent changes made to the corresponding FINRA rules, to promote application of consistent regulatory standards.

### *B. Self-Regulatory Organization's Statement on Burden on Competition*

The Exchange does not believe that the proposed rule change will result in any burden on competition that is not necessary or appropriate in furtherance of the purposes of the Act, as amended.

### *C. Self-Regulatory Organization's Statement on Comments on the Proposed Rule Change Received From Members, Participants or Others*

Written comments were neither solicited nor received.

## III. Date of Effectiveness of the Proposed Rule Change and Timing for Commission Action

The foregoing rule change has become effective pursuant to Section 19(b)(3)(A) of the Act[9] and Rule 19b–4(f)(6)[10] thereunder in that it effects a change that: (i) Does not significantly affect the protection of investors or the public interest; (ii) does not impose any significant burden on competition; and (iii) by its terms, does not become operative for 30 days after the date of the filing, or such shorter time as the Commission may designate if consistent with the protection of investors and the public interest.[11] The Exchange has requested that the Commission waive the 30-day operative delay.

The Commission has considered the Exchange's request to waive the 30-day operative delay. The Commission believes that waiving the 30-day operative delay is consistent with the protection of investors and the public interest. As noted above, BX rules cross-reference certain NASD rules that no longer exist, and have been updated in the consolidated FINRA rulebook. The proposed rule change will update certain of the references in the Exchange's rules that are outdated. The Commission also notes that these changes have previously been approved by the Commission for FINRA. The Commission believes that allowing this rule change to become immediately operative will facilitate the purpose of this rule change—namely, to eliminate any potential confusion arising from the existing rule's outdated cross-references. Based on the foregoing, the Commission finds that waiving the 30-day operative delay period is consistent with the protection of investors and the public interest, and the proposal is therefore deemed operative upon filing.[12]

At any time within 60 days of the filing of the proposed rule change, the Commission summarily may temporarily suspend such rule change if it appears to the Commission that such action is necessary or appropriate in the public interest, for the protection of investors, or otherwise in furtherance of the purposes of the Act.

## IV. Solicitation of Comments

Interested persons are invited to submit written data, views, and arguments concerning the foregoing, including whether the proposed rule change is consistent with the Act. Comments may be submitted by any of the following methods:

*Electronic Comments*

- Use the Commission's Internet comment form (*http://www.sec.gov/rules/sro.shtml*); or
- Send an e-mail to *rule-comments@sec.gov.* Please include File Number SR–BX–2010–058 on the subject line.

*Paper Comments*

- Send paper comments in triplicate to Elizabeth M. Murphy, Secretary,

[4] Securities Exchange Act Release No. 61052 (November 23, 2009), 74 FR 62857 (December 1, 2009) (SR–FINRA–2009–066).

[5] The Commission notes that, as part of those changes, FINRA deleted references to NASD Rule 2430. Since FINRA Rule 2251 no longer references NASD Rule 2430, and BX is conforming its rule to reflect the current FINRA rule, BX is also proposing to delete references to Nasdaq Rule 2430.

[6] BX intends to make a separate rule filing to incorporate changes required to this Rule by Section 957 of the Dodd-Frank Wall Street Reform and Consumer Protection Act.

[7] 15 U.S.C. 78f.

[8] 15 U.S.C. 78f(b)(5).

[9] 15 U.S.C. 78s(b)(3)(A).

[10] 17 CFR 240.19b–4(f)(6).

[11] 17 CFR 240.19b–4(f)(6). When filing a proposed rule change pursuant to Rule 19b–4(f)(6) under the Act, an Exchange is required to give the Commission written notice of its intent to file the proposed rule change, along with a brief description and text of the proposed rule change, at least five business days prior to the date of filing of the proposed rule change, or such shorter time as designated by the Commission. The Exchange has met this requirement.

[12] For the purposes only of waiving the operative date of this proposal, the Commission has considered the proposed rule's impact on efficiency, competition, and capital formation. *See* 15 U.S.C. 78c(f).

Securities and Exchange Commission, 100 F Street, NE., Washington, DC 20549–1090.

All submissions should refer to File Number SR–BX–2010–058. This file number should be included on the subject line if e-mail is used. To help the Commission process and review your comments more efficiently, please use only one method. The Commission will post all comments on the Commission's Internet Web site (*http://www.sec.gov/rules/sro.shtml*). Copies of the submission, all subsequent amendments, all written statements with respect to the proposed rule change that are filed with the Commission, and all written communications relating to the proposed rule change between the Commission and any person, other than those that may be withheld from the public in accordance with the provisions of 5 U.S.C. 552, will be available for Web site viewing and printing in the Commission's Public Reference Room, 100 F Street, NE., Washington, DC 20549, on official business days between the hours of 10 a.m. and 3 p.m. Copies of the filing also will be available for inspection and copying at the principal office of the Exchange. All comments received will be posted without change; the Commission does not edit personal identifying information from submissions. You should submit only information that you wish to make available publicly. All submissions should refer to File Number SR–BX–2010–058 and should be submitted on or before September 23, 2010.

For the Commission, by the Division of Trading and Markets, pursuant to delegated authority.[13]

**Florence E. Harmon,**

*Deputy Secretary.*

[FR Doc. 2010–21931 Filed 9–1–10; 8:45 am]

**BILLING CODE 8010–01–P**

[13] 17 CFR 200.30–3(a)(12).

## SECURITIES AND EXCHANGE COMMISSION

**[Release No. 34–62782; File No. SR–NASDAQ–2010–107]**

## Self-Regulatory Organizations; The NASDAQ Stock Market LLC; Notice of Filing of Proposed Rule Change To Modify the Eligibility Criteria for the Second Compliance Period for a Bid Price Deficiency on the Nasdaq Capital Market

August 27, 2010.

Pursuant to Section 19(b)(1) of the Securities Exchange Act of 1934 ("Act"),[1] and Rule 19b–4 thereunder,[2] notice is hereby given that on August 25, 2010, The NASDAQ Stock Market LLC ("Nasdaq") filed with the Securities and Exchange Commission ("Commission") the proposed rule change as described in Items I and II below, which Items have been substantially prepared by Nasdaq. The Commission is publishing this notice to solicit comments on the proposed rule change from interested persons.

### I. Self-Regulatory Organization's Statement of the Terms of the Substance of the Proposed Rule Change

Nasdaq proposes to modify the eligibility criteria for a company to receive a second compliance period for a bid price deficiency on the Nasdaq Capital Market. The text of the proposed rule change is below. Proposed new language is in italics; proposed deletions are in brackets.[3]

* * * * *

5810. Notification of Deficiency by the Listing Qualifications Department

When the Listing Qualifications Department determines that a Company does not meet a listing standard set forth in the Rule 5000 Series, it will immediately notify the Company of the deficiency. As explained in more detail below, deficiency notifications are of four types:

(1)–(4) No change.

Notifications of deficiencies that allow for submission of a compliance plan or an automatic cure or compliance period may result, after review of the compliance plan or expiration of the cure or compliance period, in issuance of a Staff Delisting Determination or a Public Reprimand Letter.

(a)–(b) No change.

IM–5810–1 No change.

(c) Types of Deficiencies and Notifications

The type of deficiency at issue determines whether the Company will be immediately suspended and delisted, or whether it may submit a compliance plan for review or is entitled to an automatic cure or compliance period before a Staff Delisting Determination is issued. In the case of a deficiency not specified below, Staff will issue the Company a Staff Delisting Determination or a Public Reprimand Letter.

(1)–(2) No change.

IM–5810–2 No change.

(3) Deficiencies for which the Rules Provide a Specified Cure or Compliance Period

With respect to deficiencies related to the standards listed in (A)—(E) below, Staff's notification will inform the Company of the applicable cure or compliance period provided by these Rules and discussed below. If the Company does not regain compliance within the specified cure or compliance period, the Listing Qualifications Department will immediately issue a Staff Delisting Determination letter.

(A) Bid Price

A failure to meet the continued listing requirement for minimum bid price shall be determined to exist only if the deficiency continues for a period of 30 consecutive business days. Upon such failure, the Company shall be notified promptly and shall have a period of 180 calendar days from such notification to achieve compliance. Compliance can be achieved during any compliance period by meeting the applicable standard for a minimum of 10 consecutive business days during the applicable compliance period, unless Staff exercises its discretion to extend this 10 day period as discussed in Rule 5810(c)(3)(F).

(i) Global Select Market and Global Market

If a Company listed on The Nasdaq Global Market has not been deemed in compliance prior to the expiration of the 180 day compliance period, it may transfer to The Nasdaq Capital Market, provided that it meets *the applicable market value of publicly held shares requirement for continued listing and* all *other* applicable requirements for initial listing on the Capital Market [, other than the minimum] *(except for the* bid price requirement*) based on the Company's most recent public filings and market information and notifies Nasdaq of its intent to cure this deficiency.* [A Company listed on The Nasdaq Global Market transferring to The Nasdaq Capital Market must pay any applicable entry fees set forth in Rule 5920(a). The Company may also request a hearing to remain on The Nasdaq Global Market pursuant to the

[1] 15 U.S.C. 78s(b)(1).

[2] 17 CFR 240.19b–4.

[3] Changes are marked to the rule text that appears in the electronic manual of Nasdaq found at *http://nasdaqomx.cchwallstreet.com.*

Rule 5800 Series.] Following a transfer to The Nasdaq Capital Market, the Company will be afforded the remainder of [any] *the applicable* compliance period set forth in [Rule 5810(c)(3)(A) or] Rule 5810(c)(3)(A)(ii) [as if the Company had been listed on The Nasdaq Capital Market]*, unless it does not appear to Nasdaq that it is possible for the Company to cure the deficiency. The Company may also request a hearing to remain on The Nasdaq Global Market pursuant to the Rule 5800 Series.* Any time spent in the hearing process will not extend the length of the remaining applicable compliance periods on The Nasdaq Capital Market afforded by this rule.

(ii) Capital Market

If a Company listed on the Capital Market is not deemed in compliance before the expiration of the 180 day compliance period, it will be afforded an additional 180 day compliance period, provided that on the 180th day of the first compliance period[, the Company demonstrates that] it meets *the applicable market value of publicly held shares requirement for continued listing and* all *other* applicable standards for initial listing on the Capital Market (except the bid price requirement) based on the Company's most recent public filings and market information *and notifies Nasdaq of its intent to cure this deficiency. If a Company does not indicate its intent to cure the deficiency, or if it does not appear to Nasdaq that it is possible for the Company to cure the deficiency, the Company will not be eligible for the second grace period.* If the Company has publicly announced information (*e.g.,* in an earnings release) indicating that it no longer satisfies the applicable [initial] listing criteria, it shall not be eligible for the additional compliance period under this rule.

(B)–(F) No change.

(4) No change.

(d) No change.

* * * * *

## II. Self-Regulatory Organization's Statement of the Purpose of, and Statutory Basis for, the Proposed Rule Change

In its filing with the Commission, Nasdaq included statements concerning the purpose of and basis for the proposed rule change and discussed any comments it received on the proposed rule change. The text of these statements may be examined at the places specified in Item IV below. Nasdaq has prepared summaries, set forth in Sections A, B, and C below, of the most significant aspects of such statements.

*A. Self-Regulatory Organization's Statement of the Purpose of, and Statutory Basis for, the Proposed Rule Change*

1. Purpose

Nasdaq proposes to modify the requirements for the second compliance period available to companies that fall below the continued listing price requirement. Under the present rules, once a company has a closing bid price below $1 for 30 consecutive days it becomes deficient and receives written notice that it has a 180 day "grace" period to regain compliance. Compliance can be achieved by maintaining a minimum $1 closing bid price for ten consecutive days. At the expiration of the 180 day period, a company can receive an additional 180 day grace period, provided it is either already listed on the Capital Market or transfers to that market and satisfies all of the Capital Market's initial listing criteria, except for bid price.

Nasdaq has observed that many companies fail to qualify for the second grace period because they do not meet the market value of publicly held shares requirement for initial listing on the Capital Market. Eligibility for the second grace period is quite important as it allows more time to regain compliance before the company must undertake a reverse stock split to increase its stock price, and therefore frees company management to focus on running their business and not on remaining listed or addressing related investor concerns.

The link between failure to comply with the bid price requirement and failure to meet the initial listing requirement for market value of publicly held shares—and thus qualify for the second grace period—is clear, given that the market value of publicly held shares is directly derived from the price of the security.[4] Accordingly, Nasdaq proposes to ease the requirements for the second grace period on the Capital Market by allowing a company to qualify if it satisfies the lower continued listing requirement for market value of publicly held shares, thereby enabling more companies to be eligible for the second grace period.[5] The company would still need to meet all of the other initial listing criteria for Capital Market other than bid price. In addition, the company will need to notify Nasdaq of its intent to cure the bid price deficiency. If a company does not indicate its intent to cure the deficiency, or if it does not appear to Nasdaq staff that it is possible for the company to cure the deficiency, the company would not be eligible for the second grace period. A company listed on the Global or Global Select Markets would be permitted to transfer to the Capital Market if it meets the applicable market value of publicly held shares requirement for continued listing and all other applicable requirements for initial listing on the Capital Market (except for the bid price requirement) and notifies Nasdaq of its intent to cure the bid price deficiency. Once on the Capital Market, the company would be eligible for the second grace period on the Capital Market, unless it does not appear to Nasdaq staff that it is possible for the Company to cure the deficiency.

While certain companies that do not currently qualify for the second grace period could receive additional time, the proposed rule change would not extend the overall maximum of 360 days available to companies. Further, Nasdaq's grace periods would remain stricter than those of NYSE Amex, which has no $1 continued listing requirement and therefore permits companies to remain listed indefinitely at a price below $1.[6]

Nasdaq is also proposing non-substantive changes to Rule 5810(c)(3)(A)(i) and (ii) to clarify and reorder the rule language and conform the language in these two sections. These changes are consistent with how Nasdaq currently interprets the rule. Nasdaq also proposes to remove language about the payment of fees by a company which transfers to the Capital Market because no fees are applicable under Rule 5920(a) to such a company, making the existing language confusing.

2. Statutory Basis

Nasdaq believes that the proposed rule change is consistent with the provisions of Section 6 of the Act,[7] in general and with Section 6(b)(5) of the

[4] Nasdaq has previously recognized this link in other contexts. *See, e.g.,* Securities Exchange Act Release No. 58809 (October 17, 2008), 73 FR 63222 (October 23, 2008) (SR–NASDAQ–2008–082, suspending both the bid price and market value of publicly held shares requirements in light of the financial crisis).

[5] The initial listing requirements for market value of publicly held shares for common stock on the Capital Market range from $5 million to $15 million, depending on the listing standard under which the company qualifies; the continued listing requirement is $1 million. *See* Rules 5505(b) and 5555(a)(4).

[6] *Cf.* Section 1003(f)(v) of the NYSE Amex Company Guide (stating that NYSE Amex would consider delisting a common stock that sells for a substantial period of time at a low price per share, if the issuer fails to effect a reverse split of such shares within a reasonable time after being notified that the Exchange deems such action to be appropriate under all the circumstances).

[7] 15 U.S.C. 78f.

Act,[8] in particular in that it is designed to prevent fraudulent and manipulative acts and practices, to promote just and equitable principles of trade, to foster cooperation and coordination with persons engaged in regulating, clearing, settling, processing information with respect to, and facilitating transactions in securities, to remove impediments to and perfect the mechanism of a free and open market and a national market system, and, in general, to protect investors and the public interest. The proposed rule change is consistent with these requirements in that it would permit reasonable periods of time for companies to address instances of noncompliance with Nasdaq's price requirement and would not adversely affect investors or the national market system.

*B. Self-Regulatory Organization's Statement on Burden on Competition*

Nasdaq does not believe that the proposed rule change will result in any burden on competition that is not necessary or appropriate in furtherance of the purposes of the Act, as amended.

*C. Self-Regulatory Organization's Statement on Comments on the Proposed Rule Change Received From Members, Participants, or Others*

Written comments were neither solicited nor received.

**III. Date of Effectiveness of the Proposed Rule Change and Timing for Commission Action**

Within 45 days of the date of publication of this notice in the **Federal Register** or within such longer period up to 90 days (i) as the Commission may designate if it finds such longer period to be appropriate and publishes its reasons for so finding or (ii) as to which the self-regulatory organization consents, the Commission will:

(A) By order approve or disapprove the proposed rule change, or

(B) Institute proceedings to determine whether the proposed rule change should be disapproved.

**IV. Solicitation of Comments**

Interested persons are invited to submit written data, views, and arguments concerning the foregoing, including whether the proposed rule change, as amended, is consistent with the Act. Comments may be submitted by any of the following methods:

*Electronic Comments*

- Use the Commission's Internet comment form (*http://www.sec.gov/rules/sro.shtml*); or
- Send an e-mail to *rule-comments@sec.gov.* Please include File Number SR–NASDAQ–2010–107 on the subject line.

*Paper Comments*

- Send paper comments in triplicate to Elizabeth M. Murphy, Secretary, Securities and Exchange Commission, 100 F Street, NE., Washington, DC 20549–1090.

All submissions should refer to File Number SR–NASDAQ–2010–107. This file number should be included on the subject line if e-mail is used. To help the Commission process and review your comments more efficiently, please use only one method. The Commission will post all comments on the Commission's Internet Web site (*http://www.sec.gov/rules/sro.shtml*). Copies of the submission, all subsequent amendments, all written statements with respect to the proposed rule change that are filed with the Commission, and all written communications relating to the proposed rule change between the Commission and any person, other than those that may be withheld from the public in accordance with the provisions of 5 U.S.C. 552, will be available for Web site viewing and printing in the Commission's Public Reference Room, 100 F Street, NE., Washington, DC 20549, on official business days between the hours of 10 a.m. and 3 p.m. Copies of such filing also will be available for Web site viewing and printing at the principal office of Nasdaq. All comments received will be posted without change; the Commission does not edit personal identifying information from submissions. You should submit only information that you wish to make available publicly. All submissions should refer to File Number SR–NASDAQ–2010–107 and should be submitted on or before September 23, 2010.

For the Commission, by the Division of Trading and Markets, pursuant to delegated authority.[9]

**Florence E. Harmon,**

*Deputy Secretary.*

[FR Doc. 2010–21932 Filed 9–1–10; 8:45 am]

**BILLING CODE 8010–01–P**

[8] 15 U.S.C. 78f(b)(5).

[9] 17 CFR 200.30–3(a)(12).

## SECURITIES AND EXCHANGE COMMISSION

**[Release No. 34–62785; File No. SR–NASDAQ–2010–106]**

## Self-Regulatory Organizations; The NASDAQ Stock Market LLC; Notice of Filing and Immediate Effectiveness of Proposed Rule Change To Modify Fees Assessed to Members Using the NASDAQ Market Center

August 27, 2010.

Pursuant to Section 19(b)(1) of the Securities Exchange Act of 1934 ("Act"),[1] and Rule 19b–4 thereunder,[2] notice is hereby given that on August 25, 2010, The NASDAQ Stock Market LLC ("NASDAQ") filed with the Securities and Exchange Commission ("Commission") the proposed rule change as described in Items I, II, and III below, which Items have been prepared by NASDAQ. The Commission is publishing this notice to solicit comments on the proposed rule change from interested persons.

**I. Self-Regulatory Organization's Statement of the Terms of the Substance of the Proposed Rule Change**

NASDAQ proposes to modify pricing assessed to NASDAQ members using the NASDAQ Market Center. NASDAQ will implement the proposed change on September 1, 2010. The text of the proposed rule change is available at *http://nasdaqomx.cchwallstreet.com/*, at NASDAQ's principal office, and at the Commission's Public Reference Room.

**II. Self-Regulatory Organization's Statement of the Purpose of, and Statutory Basis for, the Proposed Rule Change**

In its filing with the Commission, NASDAQ included statements concerning the purpose of and basis for the proposed rule change and discussed any comments it received on the proposed rule change. The text of these statements may be examined at the places specified in Item IV below. NASDAQ has prepared summaries, set forth in Sections A, B, and C below, of the most significant aspects of such statements.

*A. Self-Regulatory Organization's Statement of the Purpose of, and Statutory Basis for, the Proposed Rule Change*

1. Purpose

NASDAQ is proposing to reduce fees assessed members for routing odd-lot directed orders. NASDAQ assesses

[1] 15 U.S.C. 78s(b)(1).

[2] 17 CFR 240.19b–4.

different fees for orders directed to the New York Stock Exchange ("NYSE") that do not attempt to execute in the Nasdaq Market Center prior to routing based on whether the order is an odd-lot or round-lot. In this regard, NASDAQ currently assesses a fee of $0.0021 for round-lot directed orders that execute on the NYSE, an amount equal to the fee assessed NASDAQ by NYSE for executing such orders. NASDAQ assesses a fee of $0.03 on directed orders that do not attempt to execute in the Nasdaq Market Center prior to routing and that execute at the NYSE as an odd-lot transaction, and $0.01 for the odd-lot portion of a [sic] partial round-lot orders that do not attempt to execute in the Nasdaq Market Center prior to routing and that execute at the NYSE. The NYSE executes odd-lot orders on the Odd-lot System, a separate system designed to execute odd-lot interest that does not expose odd-lot orders to the market in the NYSE Display Book, but rather executes such interest against a designated maker as a contra party using a complex pricing formula to determine the execution price.

The NYSE recently made technical changes that allow odd-lot interest to be exposed to, and executed against, the general market in its Display Book and is thus decommissioning its separate Odd-lot System.[3] In light of the elimination of any distinction between how odd-lot and round-lot orders are handled by the NYSE,[4] NASDAQ is making minor modifications to its pricing schedule for the routing of odd-lot orders directed to the NYSE through the NASDAQ Market Center. NASDAQ is proposing to lower the fees assessed for these directed odd-lot orders to $0.0021 so that the fee is harmonized with the fee assessed NASDAQ by the NYSE for any executed directed order.

2. Statutory Basis

NASDAQ believes that the proposed rule change is consistent with the provisions of Section 6 of the Act,[5] in general, and with Section 6(b)(4) of the Act,[6] in particular, in that it provides for the equitable allocation of reasonable dues, fees and other charges among members and issuers and other persons using any facility or system which NASDAQ operates or controls. NASDAQ believes that, because NYSE no longer handles routed round-lot and routed odd-lot orders differently and assesses a single uniform fee for such orders, it is appropriate for NASDAQ to assess a uniform fee for routing both types of orders. The harmonized fees also equal the amount assessed NASDAQ by NYSE for executing such orders. Accordingly, NASDAQ believes that the reduced fees are both reasonable and equitably allocated to members.

*B. Self-Regulatory Organization's Statement on Burden on Competition*

NASDAQ does not believe that the proposed rule change will result in any burden on competition that is not necessary or appropriate in furtherance of the purposes of the Act, as amended. To the contrary, NASDAQ believes that the reduced fee will lower costs and encourage competition. Because the market for order execution and routing is extremely competitive, members may readily direct orders to NASDAQ's competitors if they object to the proposed rule change.

*C. Self-Regulatory Organization's Statement on Comments on the Proposed Rule Change Received From Members, Participants, or Others*

Written comments were neither solicited nor received.

## III. Date of Effectiveness of the Proposed Rule Change and Timing for Commission Action

The foregoing rule change has become effective pursuant to Section 19(b)(3)(A)(ii) of the Act.[7] At any time within 60 days of the filing of the proposed rule change, the Commission summarily may temporarily suspend such rule change if it appears to the Commission that such action is necessary or appropriate in the public interest, for the protection of investors, or otherwise in furtherance of the purposes of the Act. If the Commission takes such action, the Commission shall institute proceedings to determine whether the proposed rule should be approved or disapproved.

## IV. Solicitation of Comments

Interested persons are invited to submit written data, views, and arguments concerning the foregoing, including whether the proposed rule change is consistent with the Act. Comments may be submitted by any of the following methods:

*Electronic Comments*

- Use the Commission's Internet comment form (*http://www.sec.gov/rules/sro.shtml*); or
- Send an e-mail to *rule-comments@sec.gov.* Please include File Number SR–NASDAQ–2010–106 on the subject line.

*Paper Comments*

- Send paper comments in triplicate to Elizabeth M. Murphy, Secretary, Securities and Exchange Commission, 100 F Street, NE., Washington, DC 20549–1090.

All submissions should refer to File Number SR–NASDAQ–2010–106. This file number should be included on the subject line if e-mail is used.

To help the Commission process and review your comments more efficiently, please use only one method. The Commission will post all comments on the Commission's Internet Web site (*http://www.sec.gov/rules/sro.shtml).* Copies of the submission, all subsequent amendments, all written statements with respect to the proposed rule change that are filed with the Commission, and all written communications relating to the proposed rule change between the Commission and any person, other than those that may be withheld from the public in accordance with the provisions of 5 U.S.C. 552, will be available for Web site viewing and printing in the Commission's Public Reference Room on official business days between the hours of 10 a.m. and 3 p.m. Copies of such filing also will be available for inspection and copying at the principal offices of the Exchange. All comments received will be posted without change; the Commission does not edit personal identifying information from submissions. You should submit only information that you wish to make available publicly. All submissions should refer to File Number SR–NASDAQ–2010–106, and should be submitted on or before September 23, 2010.

For the Commission, by the Division of Trading and Markets, pursuant to delegated authority.[8]

**Florence E. Harmon,**

*Deputy Secretary.*

[FR Doc. 2010–21933 Filed 9–1–10; 8:45 am]

**BILLING CODE 8010–01–P**

[3] On July 27, 2010, the Commission approved a proposed rule change by the NYSE to incorporate the receipt and execution of odd-lot interest into the round lot market and decommission the use of the NYSE's "Odd-lot System." Securities Exchange Act Release No. 62578 (July 27, 2010), 75 FR 45185 (August 2, 2010) (SR–NYSE–2010–43).

[4] The NYSE is transitioning securities on a rolling basis during the month of August 2010. *See http://www.nyse.com/attachment/Trading_In_Shares_Rollout_List.xls.*

[5] 15 U.S.C. 78f.

[6] 15 U.S.C. 78f(b)(4).

[7] 15 U.S.C. 78s(b)(3)(a)(ii).

[8] 17 CFR 200.30–3(a)(12).

## SECURITIES AND EXCHANGE COMMISSION

**[Release No. 34–62787; File No. SR–FINRA–2010–045]**

## Self-Regulatory Organizations; Financial Industry Regulatory Authority, Inc.; Notice of Filing and Immediate Effectiveness of Proposed Rule Change To Amend the Security Futures Risk Disclosure Statement

August 27, 2010.

Pursuant to Section 19(b)(1) of the Securities Exchange Act of 1934 ("Act") [1] and Rule 19b-4 thereunder,[2] notice is hereby given that on August 16, 2010, Financial Industry Regulatory Authority, Inc. ("FINRA") filed with the Securities and Exchange Commission ("SEC" or "Commission") the proposed rule change as described in Items I, and II, which Items have been prepared by FINRA. The Commission is publishing this notice to solicit comments on the proposed rule change from interested persons.

### I. Self-Regulatory Organization's Statement of the Terms of Substance of the Proposed Rule Change

FINRA is proposing a supplement to the security futures risk disclosure statement to accommodate proposed changes by OneChicago, LLC to list a class of security futures for which adjustments will be made for ordinary dividends.

The text of the proposed rule change is available on FINRA's Web site at *http://www.finra.org,* at the principal office of FINRA and at the Commission's Public Reference Room.

### II. Self-Regulatory Organization's Statement of the Purpose of, and Statutory Basis for, the Proposed Rule Change

In its filing with the Commission, FINRA included statements concerning the purpose of and basis for the proposed rule change and discussed any comments it received on the proposed rule change. The text of these statements may be examined at the places specified in Item IV below. FINRA has prepared summaries, set forth in sections A, B, and C below, of the most significant aspects of such statements.

[1] 15 U.S.C. 78s(b)(1).

[2] 17 CFR 240.19b–4.

*A. Self-Regulatory Organization's Statement of the Purpose of, and Statutory Basis for, the Proposed Rule Change*

1. Purpose

In 2002, FINRA developed sales practice rules governing security futures.[3] Among those rules' requirements is the obligation of every member to deliver the current security futures risk disclosure statement ("Statement") to each customer at or prior to the time such customer's account is approved for trading security futures.[4] The current Statement was approved by the SEC in 2002.[5] FINRA is proposing a supplement to the Statement to accommodate proposed changes by OneChicago, LLC to list a class of security futures for which adjustments will be made for ordinary dividends. The proposed supplement is intended to be read in conjunction with the Statement.

FINRA will announce the implementation date of the proposed rule change in a *Regulatory Notice* to be published no later than 60 days following Commission notice of the filing of the rule change for immediate effectiveness. The implementation date will be no later than 90 days after the date of the filing.

2. Statutory Basis

FINRA believes that the proposed rule change is consistent with the provisions of Section 15A(b)(6) of the Act,[6] which requires, among other things, that FINRA rules must be designed to prevent fraudulent and manipulative acts and practices, to promote just and equitable principles of trade, and, in general, to protect investors and the public interest. FINRA believes that the proposed rule change, which will be provided to customers, will help to accurately inform customers of the characteristics and risks of security futures.

*B. Self-Regulatory Organization's Statement on Burden on Competition*

FINRA does not believe that the proposed rule change will result in any burden on competition that is not necessary or appropriate in furtherance of the purposes of the Act.

[3] *See* Securities Exchange Act Release No. 46663 (October 15, 2002), 67 FR 64944 (October 22, 2002) (Order Approving File No. SR–NASD–2002–040).

[4] FINRA Rule 2370(b)(11).

[5] *See* Securities Exchange Act Release No. 46612 (October 7, 2002), 67 FR 64151 (October 17, 2002) (Notice of Filing and Summary Effectiveness of File No. SR–NASD–2002–128).

[6] 15 U.S.C. 78o–3(b)(6).

*C. Self-Regulatory Organization's Statement on Comments on the Proposed Rule Change Received From Members, Participants, or Others*

Written comments were neither solicited nor received.

### III. Date of Effectiveness of the Proposed Rule Change and Timing for Commission Action

Because the foregoing proposed rule change does not: (i) Significantly affect the protection of investors or the public interest; (ii) impose any significant burden on competition; and (iii) become operative for 30 days from the date on which it was filed, or such shorter time as the Commission may designate, it has become effective pursuant to Section 19(b)(3)(A) of the Act [7] and Rule 19b–4(f)(6) thereunder.[8]

At any time within 60 days of the filing of the proposed rule change, the Commission summarily may temporarily suspend such rule change if it appears to the Commission that such action is necessary or appropriate in the public interest, for the protection of investors, or otherwise in furtherance of the purposes of the Act.

### IV. Solicitation of Comments

Interested persons are invited to submit written data, views and arguments concerning the foregoing, including whether the proposed rule change is consistent with the Act. Comments may be submitted by any of the following methods:

*Electronic Comments*

- Use the Commission's Internet comment form (*http://www.sec.gov/rules/sro.shtml*); or
- Send an e-mail to *rule-comments@sec.gov.* Please include File Number SR–FINRA–2010–045 on the subject line.

*Paper Comments*

- Send paper comments in triplicate to Elizabeth M. Murphy, Secretary, Securities and Exchange Commission, 100 F Street, NE., Washington, DC 20549–1090.

All submissions should refer to File Number SR–FINRA–2010–045. This file number should be included on the subject line if e-mail is used. To help the Commission process and review your comments more efficiently, please use

[7] 15 U.S.C. 78s(b)(3)(A).

[8] 17 CFR 240.19b–4(f)(6). In addition, Rule 19b–4(f)(6) requires a self-regulatory organization to give the Commission written notice of its intent to file the proposed rule change at least five business days prior to the date of filing of the proposed rule change, or such shorter time as designated by the Commission. FINRA has satisfied this requirement.

only one method. The Commission will post all comments on the Commission's Internet Web site (*http://www.sec.gov/rules/sro.shtml*). Copies of the submission, all subsequent amendments, all written statements with respect to the proposed rule change that are filed with the Commission, and all written communications relating to the proposed rule change between the Commission and any person, other than those that may be withheld from the public in accordance with the provisions of 5 U.S.C. 552, will be available for Web site viewing and printing in the Commission's Public Reference Room, 100 F Street, NE., Washington, DC 20549, on official business days between the hours of 10 a.m. and 3 p.m. Copies of such filing also will be available for inspection and copying at the principal office of FINRA. All comments received will be posted without change; the Commission does not edit personal identifying information from submissions. You should submit only information that you wish to make available publicly. All submissions should refer to File Number SR–FINRA–2010–045 and should be submitted on or before September 23, 2010.

For the Commission, by the Division of Trading and Markets, pursuant to delegated authority.[9]

**Florence E. Harmon,**

*Deputy Secretary.*

[FR Doc. 2010–21934 Filed 9–1–10; 8:45 am]

BILLING CODE 8010–01–P

[9] 17 CFR 200.30–3(a)(12).

## DEPARTMENT OF TRANSPORTATION

### Office of the Secretary

### Notice of Applications for Certificates of Public Convenience and Necessity and Foreign Air Carrier Permits Filed Under Subpart B (Formerly Subpart Q) During the Week Ending August 14, 2010

The following Applications for Certificates of Public Convenience and Necessity and Foreign Air Carrier Permits were filed under Subpart B (formerly Subpart Q) of the Department of Transportation's Procedural Regulations (*See* 14 CFR 301.201 *et. seq.*). The due date for Answers, Conforming Applications, or Motions to Modify Scope are set forth below for each application. Following the Answer period DOT may process the application by expedited procedures. Such procedures may consist of the adoption of a show-cause order, a tentative order, or in appropriate cases a final order without further proceedings.

*Docket Number:* DOT–OST–2010–0215.

*Date Filed:* August 13, 2010.

*Due Date for Answers, Conforming Applications, or Motion to Modify Scope:* September 3, 2010.

*Description:* Application of National Air Cargo Group, Inc. d/b/a National Airlines requesting it's certificate of public convenience and necessity is amended to include authority for foreign charter air transportation of persons, property and mail.

**Renee V. Wright,**

*Program Manager, Docket Operations, Federal Register Liaison.*

[FR Doc. 2010–21943 Filed 9–1–10; 8:45 am]

BILLING CODE 4910–9X–P

## DEPARTMENT OF TRANSPORTATION

### Office of the Secretary: Notice of Applications for Certificates of Public Convenience and Necessity and Foreign Air Carrier Permits Filed Under Subpart B (Formerly Subpart Q)

Notice of Applications for Certificates of Public Convenience and Necessity and Foreign Air Carrier Permits Filed Under Subpart B (formerly Subpart Q) during the week ending August 21, 2010. The following Applications for Certificates of Public Convenience and Necessity and Foreign Air Carrier Permits were filed under Subpart B (formerly Subpart Q) of the Department of Transportation's Procedural Regulations (*See* 14 CFR 301.201 *et. seq.*). The due date for Answers, Conforming Applications, or Motions to Modify Scope are set forth below for each application. Following the answer period DOT may process the application by expedited procedures. Such procedures may consist of the adoption of a show-cause order, a tentative order, or in appropriate cases a final order without further proceedings.

*Docket Number:* DOT–OST–2005–22228.

*Date Filed:* August 17, 2010.

*Due Date for Answers, Conforming Applications, or Motion to Modify Scope:* September 7, 2010.

*Description:* Application of Atlas Air, Inc. requesting renewal of its certificate of public convenience and necessity for blanket route integration, awarded by Order 2006–1–1.

**Renee V. Wright,**

*Program Manager, Docket Operations Federal Register Liaison.*

[FR Doc. 2010–21941 Filed 9–1–10; 8:45 am]

BILLING CODE 4910–9X–P

## DEPARTMENT OF TRANSPORTATION

### Federal Transit Administration

**[FTA Docket No. FTA–2010–0032]**

### Notice of Request for the Extension of Currently Approved Information Collection

**AGENCY:** Federal Transit Administration (FTA), DOT.

**ACTION:** Notice of Request for Comments.

**SUMMARY:** In accordance with the Paperwork Reduction Act of 1995, this notice announces the intention of the Federal Transit Administration (FTA) to request the Office of Management and Budget (OMB) to approve the following information collection: Pre-Award and Post-Delivery Review Requirements.

**DATES:** Comments must be submitted before November 1, 2010.

**ADDRESSES:** To ensure that your comments are not entered more than once into the docket, submit comments identified by the docket number by only one of the following methods:

1. *Web site: www.regulations.gov.* Follow the instructions for submitting comments on the U.S. Government electronic docket site. (**Note:** The U.S. Department of Transportation's (DOT's) electronic docket is no longer accepting electronic comments.) All electronic submissions must be made to the U.S. Government electronic docket site at *http://www.regulations.gov.* Commenters should follow the directions below for mailed and hand-delivered comments.

2. *Fax:* 202–366–7951.

3. *Mail:* U.S. Department of Transportation, 1200 New Jersey Avenue, SE., Docket Operations, M–30, West Building, Ground Floor, Room W12–140, Washington, DC 20590–0001.

4. *Hand Delivery:* U.S. Department of Transportation, 1200 New Jersey Avenue, SE., Docket Operations, M–30, West Building, Ground Floor, Room W12–140, Washington, DC 20590–0001 between 9 a.m. and 5 p.m., Monday through Friday, except Federal holidays.

*Instructions:* You must include the agency name and docket number for this notice at the beginning of your comments. Submit two copies of your

comments if you submit them by mail. For confirmation that FTA has received your comments, include a self-addressed stamped postcard. Note that all comments received, including any personal information, will be posted and will be available to Internet users, without change, to *http://www.regulations.gov*. You may review DOT's complete Privacy Act Statement in the **Federal Register** published April 11, 2000, (65 FR 19477), or you may visit *http://www.regulations.gov*.

*Docket:* For access to the docket to read background documents and comments received, go to *http://www.regulations.gov* at any time. Background documents and comments received may also be viewed at the U.S. Department of Transportation, 1200 New Jersey Avenue, SE., Docket Operations, M–30, West Building, Ground Floor, Room W12–140, Washington, DC 20590–0001 between 9 a.m. and 5 p.m., Monday through Friday, except Federal holidays.

**FOR FURTHER INFORMATION CONTACT:** Richard Wong, FTA Office of Chief Counsel (202) 366–0675, or e-mail: *richard.wong@dot.gov.*

**SUPPLEMENTARY INFORMATION:** Interested parties are invited to send comments regarding any aspect of this information collection, including: (1) The necessity and utility of the information collection for the proper performance of the functions of the FTA; (2) the accuracy of the estimated burden; (3) ways to enhance the quality, utility, and clarity of the collected information; and (4) ways to minimize the collection burden without reducing the quality of the collected information. Comments submitted in response to this notice will be summarized and/or included in the request for OMB approval of this information collection.

*Title:* Pre-Award and Post-Delivery Review Requirements.

(*OMB Number: 2132–0544).*

*Background:* Under the Federal Transit Laws, at 49 U.S.C. Section 5323(m), grantees must certify that pre-award and post-delivery reviews will be conducted when using FTA funds to purchase rolling stock and maintain these certifications on file. FTA implements this requirement in 49 CFR part 663 by describing the certificates that must be submitted by each bidder to assure compliance with the Buy America contract specification and vehicle safety requirements for rolling stock. The information collected on the certification forms is necessary for FTA grantees to meet the requirements of 49 U.S.C. Section 5323(m).

*Respondents:* State and local government, business or other for-profit institutions, non-profit institutions, and small business organizations.

*Estimated Annual Burden on Respondents:* 3.98 hours for each of the 700 respondents.

*Estimated Total Annual Burden:* 2,786 hours.

*Frequency:* Annual.

Issued: August 24, 2010.

**Ann M. Linnertz,**

*Associate Administrator for Administration.*

[FR Doc. 2010–21888 Filed 9–1–10; 8:45 am]

**BILLING CODE 4910–57–P**

---

## DEPARTMENT OF TRANSPORTATION

### National Highway Traffic Safety Administration

**[U.S. DOT Docket Number NHTSA–2010–0120]**

### Reports, Forms, and Record keeping Requirements

**AGENCY:** National Highway Traffic Safety Administration (NHTSA), Department of Transportation.

**ACTION:** Request for public comment on an extension of a currently approved collection.

**SUMMARY:** Before a Federal agency can collect certain information from the public, it must receive approval from the Office of Management and Budget (OMB). Under procedures established by the Paperwork Reduction Act of 1995, before seeking OMB approval, Federal agencies must solicit public comment on proposed collections of information, including extensions and reinstatement of previously approved collections.

This document describes one collection of information for which NHTSA intends to seek OMB approval.

**DATES:** Comments must be received on or before November 1, 2010.

**ADDRESSES:** Comments must refer to the docket notice numbers cited at the beginning of this notice and be submitted to Docket Management, Room W12–140, ground level, 1200 New Jersey Ave., SE., Washington, DC 20590 by any of the following methods.

- *Federal eRulemaking Portal: http://www.regulations.gov.* Follow the instructions for submitting comments.
- *Mail:* Docket Management Facility; U.S. Department of Transportation, 1200 New Jersey Avenue, SE., West Building Ground Floor, Room W12–140, Washington, DC 20590.
- *Hand Delivery/Courier:* 1200 New Jersey Avenue, SE., West Building Ground Floor, Room W12–140, Washington, DC 20590, between 9 am and 5 pm, Monday through Friday, except Federal Holidays. Telephone: 1–800–647–5527.
- *Fax:* (202) 493–2251.

*Instructions:* For detailed instructions on submitting comments and additional information on the rulemaking process, see the Public Participation heading of the Supplementary Information section of this document. Note that all comments received will be posted without change to *http://www.regulations.gov*, including any personal information provided. Please see the Privacy Act heading below.

*Privacy Act*: Anyone is able to search the electronic form of all comments received into any of our dockets by the name of the individual submitting the comment (or signing the comment, if submitted on behalf of an association, business, labor union, etc.). You may review DOT's complete Privacy Act Statement in the **Federal Register** published on April 11, 2000 (65 FR 19477–78) or you may visit *http://Docket Info.dot.gov.*

*Docket:* For access to the docket to read background documents or comments received, go to the street address listed above. The Internet access to the docket will be at *http://www.regulations.gov*. Follow the online instructions for accessing the dockets.

**FOR FURTHER INFORMATION CONTACT:** Complete copies of each request for collection of information may be obtained at no charge from Deborah Mazyck, NHTSA 1200 New Jersey Ave., SE., Room W43–443, NVS–131, Washington, DC 20590. Ms. Mazyck's telephone number is (202) 366–0846. Please identify the relevant collection of information by referring to its OMB Control Number.

**SUPPLEMENTARY INFORMATION:** Under the Paperwork Reduction Act of 1995, before an agency submits a proposed collection of information to OMB for approval, it must first publish a document in the **Federal Register** providing a 60-day comment period and otherwise consult with members of the public and affected agencies concerning each proposed collection of information. The OMB has promulgated regulations describing what must be included in such a document. Under OMB's regulation (at 5 CFR 1320.8(d)), an agency must ask for public comment on the following:

(i) Whether the proposed collection of information is necessary for the proper performance of the functions of the agency, including whether the information will have practical utility;

(ii) The accuracy of the agency's estimate of the burden of the proposed collection of information, including the validity of the methodology and assumptions used;

(iii) How to enhance the quality, utility, and clarity of the information to be collected and;

(iv) How to minimize the burden of the collection of information on those who are to respond, including the use of appropriate automated, electronic, mechanical, or other technological collection techniques or other forms of information technology, *e.g.* permitting electronic submission of responses.

In compliance with these requirements, NHTSA asks for public comments on the following proposed collections of information:

*Title:* Automobile Parts Content Labeling for 49 CFR Part 583

*OMB Control Number:* 2127–0573.

*Form Number:* None.

*Affected Public:* Vehicle manufacturers.

*Requested Expiration Date of Approval:* Three years from approval date.

*Abstract:* Part 583 establishes requirements for the disclosure of information relating to the countries of origin of the equipment of new passenger motor vehicles. This information will be used by NHTSA to determine whether manufacturers are complying with the American Automobile Labeling Act (49 U.S.C. 32304). The American Automobile Labeling Act requires all new passenger motor vehicles (including passenger cars, certain small buses, all light trucks and multipurpose passenger vehicles with a gross vehicle weight rating of 8,500 pounds or less), to bear labels providing information about domestic and foreign content of their equipment. With the affixed label on the new passenger motor vehicles, it serves as an aid to potential purchasers in the selection of new passenger motor vehicles by providing them with information about the value of the U.S./Canadian and foreign parts of each vehicle, the countries of origin of the engine and transmission, and the site of the vehicle's final assembly.

*Estimated Annual Burden:* NHTSA anticipates approximately 22 vehicle manufacturers will be affected by these reporting requirements. NHTSA does not believe that any of these 22 manufacturers are a small business (*i.e.,* one that employs less than 500 persons) since each manufacturer employs more than 500 persons. Manufacturers of new passenger motor vehicles, including passenger cars, certain small buses, and light trucks with a gross vehicle weight rating of 8,500 pounds or less, must file a report annually.

NHTSA estimates that the vehicle manufacturers will incur a total reporting annual hour burden and cost burden of 55,484 hours and $2,467,000. The amount includes annual burden hours incurred by multi-stage manufacturers and motor vehicle equipment suppliers.

*Number of Respondents:* 22.

*Comments are invited on:* Whether the proposed collection of information is necessary for the proper performance of the functions of the Department, including whether the information will have practical utility; the accuracy of the Department's estimate of the burden of the proposed information collection; ways to enhance the quality, utility and clarity of the information to be collected; and ways to minimize the burden of the collection of information on respondents, including the use of automated collection techniques or other forms of information technology.

Issued on: August 30, 2010.

**Joseph S. Carra,**

*Acting Associate Administrator for Rulemaking.*

[FR Doc. 2010–21947 Filed 9–1–10; 8:45 am]

BILLING CODE 4910–59–P

---

## DEPARTMENT OF TRANSPORTATION

### Federal Aviation Administration

### Fifty-Second Meeting: RTCA Special Committee 186: Automatic Dependent Surveillance—Broadcast (ADS–B)

**AGENCY:** Federal Aviation Administration (FAA), DOT.

**ACTION:** Notice of RTCA Special Committee 186: Automatic Dependent Surveillance—Broadcast (ADS–B) meeting.

**SUMMARY:** The FAA is issuing this notice to advise the public of a meeting of RTCA Special Committee 186: Automatic Dependent Surveillance—Broadcast (ADS–B).

**DATES:** The meeting will be held September 20–24, 2010 from 8 a.m. on September 24th (at RTCA)/9 a.m. (NLR) on the other days unless stated otherwise.

**ADDRESSES:** The meeting will be held at the Dutch National Aerospace Laboratory (NLR) Anthony Fokkerweg 2, 1059 CM Amsterdam and RTCA Conference Rooms at 1828 L Street, NW., Suite 805, Washington, DC 20036.

**FOR FURTHER INFORMATION CONTACT:** (1) RTCA Secretariat, 1828 L Street, NW., Suite 805, Washington, DC 20036, (202) 833–9339; fax (202) 833–9434; Web site *http://www.rtca.org.*

**SUPPLEMENTARY INFORMATION:** Pursuant to section 10(a)(2) of the Federal Advisory Committee Act (Pub. L. 92–463, 5 U.S.C., Appendix 2), notice is hereby given for a Special Committee 186: Automatic Dependent Surveillance—Broadcast (ADS–B) meeting. The agenda will include:

**Specific Working Group Sessions**

*Monday, September 20*

- NLR—All Day, Requirements Focus Group (RFG)
- NLR—All Day, WG–4, Application Technical Requirements

*Tuesday, September 21*

- NLR—All Day, Requirements Focus Group (RFG)
- NLR—All Day, WG–4, Application Technical Requirements

*Wednesday, September 22*

- NLR—All Day, Requirements Focus Group (RFG)
- NLR—All Day, WG–4, Application Technical Requirements, Colson Board Room

*Thursday, September 23*

- NLR—All Day, Requirements Focus Group (RFG)
- NLR—All Day, WG–4, Application Technical Requirements, Colson Board Room

*Friday, September 24*

- NLR & RTCA

Plenary Session—See Agenda Below

Joint RTCA SC–186/EUROCAE WG–51

**Agenda—Plenary Session—Agenda**

*September 24, 2010*

Two Locations:

Primary—NLR—Amsterdam; RTCA—Washington, DC—MacIntosh-NBAA Room & Hilton-ATA Room; Starting at 8 a.m. at RTCA and 2 p.m. in Europe for Agenda Items 4 & 6

(WebEx and Phone Bridge information to be provided upon request)

- Chairman's Introductory Remarks, Review of Meeting Agenda.
- Review/Approval of the Fifty-First Meeting Summary, RTCA Paper No. 089–10/SC186–298.
- Consider for Approval—New Document—Safety, Performance and Interoperability Requirements Document for ADS–B Airport Surface Surveillance Application (ADS–B–APT), RTCA Paper No. 132–10/SC–186–301.
- Consider for Approval—New Document—Safety, Performance and

Interoperability Requirements Document for ATSA–SURF Application, RTCA Paper No. 111–10/SC186–299.

• Consider for Approval—New Document—Safety, Performance and Interoperability Requirements Document for Enhanced Traffic Situational Awareness on the Airport Surface with Indications and Alerts, RTCA Paper No. 120–10/SC186–300.

• FAA Surveillance and Broadcast Services (SBS) Program—Status.

• Review of EUROCAE WG–51 Activities.

• Date, Place and Time of Next Meeting.

• Working Group Reports.

• WG–1—Operations and Implementation

• WG–2—TIS–B MASPS

• WG–3—1,090 MHz MOPS

• WG–4—Application Technical Requirements

• WG–5—UAT MOPS

• WG–6—ADS–B MASPS

• RFG—Requirements Focus Group

• ADS–B IM Coordination with SC–214 for Data Link Requirements—Discussion—Status

• Revised Terms of Reference (TOR)—Discussion—Review/Approval

• New Business.

• Other Business.

• Review Action Items/Work Programs.

• Adjourn Plenary.

Attendance is open to the interested public but limited to space availability. With the approval of the chairmen, members of the public may present oral statements at the meeting. Persons wishing to present statements or obtain information should contact the person listed in the **FOR FURTHER INFORMATION CONTACT** section. Members of the public may present a written statement to the committee at any time.

Issued in Washington, DC, on August 24, 2010.

**Robert L. Bostiga,**

*RTCA Advisory Committee.*

[FR Doc. 2010–21927 Filed 9–1–10; 8:45 am]

**BILLING CODE 4910–13–P**

## DEPARTMENT OF TRANSPORTATION

### Federal Aviation Administration

### Commercial Space Transportation Advisory Committee—Open Meeting

**AGENCY:** Federal Aviation Administration (FAA), DOT.

**ACTION:** Notice of Commercial Space Transportation Advisory Committee Open Meeting.

**SUMMARY:** Pursuant to Section 10(a)(2) of the Federal Advisory Committee Act (Pub. L. 92–463, 5 U.S.C. App. 2), notice is hereby given of a meeting of the Commercial Space Transportation Advisory Committee (COMSTAC). The meeting will take place on Thursday, October 7, 2010, starting at 8 a.m. at the National Housing Center, 1201 15th Street, NW., Washington, DC 20005.

The proposed agenda for this meeting will feature discussions on:

—Orbital debris and related issues;

—The issues the working groups propose to address; and

—The role of commercial space as part of the United States' Space Policy.

There will be discussions and activity reports by the chairpersons of the COMSTAC working groups.

Mr. Philip McAlister of the National Aeronautics and Space Administration's (NASA) Commercial Crew Transportation office has been invited to speak.

Interested members of the public may submit relevant written statements for the COMSTAC members to consider under the advisory process. Statements may concern the issues and agenda items mentioned above or additional issues that may be relevant for the U.S. commercial space transportation industry. Interested parties wishing to submit written statements should contact Susan Lender, DFO, (the Contact Person listed below) in writing (mail or e-mail) by September 15, 2010, so that the information can be made available to COMSTAC members for their review and consideration prior to the October 7, 2010, meeting. Written statements should be supplied in the following formats: One hard copy with original signature or one electronic copy via e-mail.

Subject to approval, a portion of the October 7th meeting will be closed to the public (starting at 3:45 pm).

An agenda will be posted on the FAA Web site at *http://www.faa.gov/go/ast.* For specific information concerning the times and locations of the COMSTAC working group meetings, contact the Contact Person listed below.

The FAA is committed to providing equal access to this meeting for all participants. If you need alternative formats or services because of a disability, please inform the contact person by telephone or e-mail with your request by close of business September 15, 2010.

**FOR FURTHER INFORMATION, CONTACT:** Susan Lender (AST–100), Office of Commercial Space Transportation (AST), 800 Independence Avenue, SW., Room 331, Washington, DC 20591, telephone (202) 267–8029; E-mail *susan.lender@faa.gov.* Complete information regarding COMSTAC is available on the FAA Web site at: *http://www.faa.gov/about/office_org/headquarters_offices/ast/advisory_committee/.*

Issued in Washington, DC, August 27, 2010.

**George C. Nield,**

*Associate Administrator for Commercial Space Transportation.*

[FR Doc. 2010–21910 Filed 9–1–10; 8:45 am]

**BILLING CODE 4910–13–P**

## DEPARTMENT OF TRANSPORTATION

### National Highway Traffic Safety Administration

**[Docket No. NHTSA–2010–0119; Notice 1]**

### Notice of Receipt of Petition for Decision That Nonconforming 1987–1988 Leyland Motors Olympian Open Top Model Double Decker Buses Are Eligible for Importation

**AGENCY:** National Highway Traffic Safety Administration, DOT.

**ACTION:** Notice of receipt of petition.

**SUMMARY:** This document announces receipt by the National Highway Traffic Safety Administration (NHTSA) of a petition for a decision that 1987–1988 Leyland Motors Olympian open top model double decker buses that were not originally manufactured to comply with all applicable Federal Motor Vehicle Safety Standards (FMVSS) are eligible for importation into the United States because they have safety features that comply with, or are capable of being altered to comply with, all such standards.

**DATES:** The closing date for comments on the petition is October 4, 2010.

**ADDRESSES:** Comments should refer to the docket and notice numbers above and be submitted by any of the following methods:

• *Federal eRulemaking Portal:* Go to *http://www.regulations.gov.* Follow the online instructions for submitting comments.

• *Mail:* Docket Management Facility: U.S. Department of Transportation, 1200 New Jersey Avenue SE., West Building Ground Floor, Room W12–140, Washington, DC 20590–0001.

• *Hand Delivery or Courier:* West Building Ground Floor, Room W12–140, 1200 New Jersey Avenue, SE., between 9 a.m. and 5 p.m. ET, Monday through Friday, except Federal holidays.

• *Fax:* 202–493–2251.

*Instructions:* Comments must be written in the English language, and be no greater than 15 pages in length,

although there is no limit to the length of necessary attachments to the comments. If comments are submitted in hard copy form, please ensure that two copies are provided. If you wish to receive confirmation that your comments were received, please enclose a stamped, self-addressed postcard with the comments. Note that all comments received will be posted without change to *http://www.regulations.gov,* including any personal information provided. Please see the Privacy Act heading below.

*Privacy Act:* Anyone is able to search the electronic form of all comments received into any of our dockets by the name of the individual submitting the comment (or signing the comment, if submitted on behalf of an association, business, labor union, etc.). You may review DOT's complete Privacy Act Statement in the **Federal Register** published on April 11, 2000 (65 FR 19477–78).

*How to Read Comments submitted to the Docket:* You may read the comments received by Docket Management at the address and times given above. You may also view the documents from the Internet at *http://www.regulations.gov.*

Follow the online instructions for accessing the dockets. The docket ID number and title of this notice are shown at the heading of this document notice. Please note that even after the comment closing date, we will continue to file relevant information in the Docket as it becomes available. Further, some people may submit late comments. Accordingly, we recommend that you periodically search the Docket for new material.

**FOR FURTHER INFORMATION CONTACT:** Coleman Sachs, Office of Vehicle Safety Compliance, NHTSA (202–366–3151).

**SUPPLEMENTARY INFORMATION:**

## Background

Under 49 U.S.C. 30141(a)(1)(B), a motor vehicle that was not originally manufactured to conform to all applicable FMVSS, and has no substantially similar U.S.-certified counterpart, shall be refused admission into the United States unless NHTSA has decided that the motor vehicle has safety features that comply with, or are capable of being altered to comply with, all applicable FMVSS based on destructive test data or such other evidence as NHTSA decides to be adequate.

Petitions for eligibility decisions may be submitted by either manufacturers or importers who have registered with NHTSA pursuant to 49 CFR Part 592. As specified in 49 CFR 593.7, NHTSA publishes notices in the **Federal Register** for each petition that it receives, and affords interested persons an opportunity to comment on the petitions. At the close of the comment period, NHTSA decides, on the basis of the petitions and any comments that it has received, whether the vehicle(s) is eligible for importation. The agency then publishes their decision in the **Federal Register**.

G&K Automotive Conversion, Inc. of Santa Ana, California (G&K) (Registered Importer 90–007) has petitioned NHTSA to decide whether nonconforming 1987–1988 Leyland Motors Olympian open top model double decker buses are eligible for importation into the United States.

G&K submitted information with its petition intended to demonstrate that non-U.S. certified 1987–1988 Leyland Motors Olympian open top model double decker buses, as originally manufactured, conform to many FMVSS, or are capable of being altered to conform to those standards.

Specifically, the petitioner claims that non-U.S. certified 1987–1988 Leyland Motors Olympian open top model double decker buses, as originally manufactured, comply with Standard Nos. 102 *Transmission Shift Lever Sequence, Starter Interlock, and Transmission Braking Effect,* 103 *Windshield Defrosting and Defogging Systems,* 104 *Windshield Wiping and Washing Systems,* 105 *Vehicle Identification Number—Basic Requirements,* 106 *Brake Hoses,* 107 *Reflecting Surfaces,* 111 *Rearview Mirrors,* 119 *New Pneumatic Tires for Vehicles other than Passenger Cars,* 121 *Air Brake Systems,* 124 *Accelerator Control Systems,* 205 *Glazing Materials,* 207 *Seating Systems,* 217 *Bus Emergency Exits and Window Retention and Release,* and 302 *Flammability of Interior Materials.*

With regard to Standard No. 121 *Air Brake Systems,* the petition asserts that all elements of the braking system comply with the applicable FMVSS No. 121 requirements. The petitioner further explains that the subject vehicle's brake system is similar to that installed on the 1972 to 1977 Bristol VRT double decker buses that NHTSA determined eligible for importation by Registered Importers under VCP–4 and VCP–10. NHTSA is concerned that the brake system on the vehicles that are the subject of the petition may not, in fact, have been originally manufactured to comply with all requirements of Standard No. 121. As a consequence, the agency is soliciting specific comments with respect to this issue.

Petitioner also contends that the vehicle is capable of being altered to meet the following standards, in the manners indicated:

Standard No. 101 *Controls and Displays:* Installation of a seat belt telltale lamp and label to ensure that these displays meet the requirements of this standard.

Standard No. 108 *Lamps, Reflective Devices and Associated Equipment:* Installation of the following U.S.-conforming components: (a) Headlamps; (b) clearance lamps; (c) identification lamps; (d) side marker lamps; (e) reflex reflectors; and (f) license plate lamps as necessary to meet the requirements of this standard.

Standard No. 120 *New Pneumatic Tires for Vehicles Other than Passenger Cars:* Installation of a tire information placard.

Standard No. 208 *Occupant Crash Protection:* Installation of a driver's seat belt and an audible seat belt warning system to meet the requirements of this standard.

Standard No. 209 *Seat Belt Assemblies:* Installation of driver's seat belt that meets the requirements of this standard.

Standard No. 210 *Seat Belt Assembly Anchorages:* Installation of driver's seat belt anchorages that meet the requirements of this standard.

All comments received before the close of business on the closing date indicated above will be considered, and will be available for examination in the docket at the above addresses both before and after that date. To the extent possible, comments filed after the closing date will also be considered. Notice of final action on the petition will be published in the **Federal Register** pursuant to the authority indicated below.

**Authority:** 49 U.S.C. 30141(a)(1)(A) and (b)(1); 49 CFR 593.8; delegations of authority at 49 CFR 1.50 and 501.8.

Issued on: August 26, 2010.

**Claude H. Harris,**

*Director, Office of Vehicle Safety Compliance.*

[FR Doc. 2010–21926 Filed 9–1–10; 8:45 am]

BILLING CODE 4910–59–P

## DEPARTMENT OF THE TREASURY

### Office of Thrift Supervision

### Imperial Savings and Loan Association, Martinsville, VA; Notice of Appointment of Receiver

Notice is hereby given that, pursuant to the authority contained in section 5(d)(2) of the Home Owners' Loan Act,

the Office of Thrift Supervision has duly appointed the Federal Deposit Insurance Corporation as sole Receiver for Imperial Savings and Loan Association, Martinsville, Virginia (OTS No. 7270) on August 20, 2010.

Dated: August 26, 2010.

By the Office of Thrift Supervision.

**Sandra E. Evans,**

*Federal Register Liaison.*

[FR Doc. 2010–21856 Filed 9–1–10; 8:45 am]

**BILLING CODE 6720–01–M**

# Reader Aids

**Federal Register**

Vol. 75, No. 170

Thursday, September 2, 2010

## CUSTOMER SERVICE AND INFORMATION

| | |
|---|---|
| **Federal Register/Code of Federal Regulations** | |
| General Information, indexes and other finding aids | **202–741–6000** |
| **Laws** | **741–6000** |
| **Presidential Documents** | |
| Executive orders and proclamations | **741–6000** |
| **The United States Government Manual** | **741–6000** |
| **Other Services** | |
| Electronic and on-line services (voice) | **741–6020** |
| Privacy Act Compilation | **741–6064** |
| Public Laws Update Service (numbers, dates, etc.) | **741–6043** |
| TTY for the deaf-and-hard-of-hearing | **741–6086** |

## ELECTRONIC RESEARCH

### World Wide Web

Full text of the daily Federal Register, CFR and other publications is located at: **http://www.gpoaccess.gov/nara/index.html**

Federal Register information and research tools, including Public Inspection List, indexes, and links to GPO Access are located at: **http://www.archives.gov/federal__register**

### E-mail

**FEDREGTOC-L** (Federal Register Table of Contents LISTSERV) is an open e-mail service that provides subscribers with a digital form of the Federal Register Table of Contents. The digital form of the Federal Register Table of Contents includes HTML and PDF links to the full text of each document.

To join or leave, go to **http://listserv.access.gpo.gov** and select *Online mailing list archives, FEDREGTOC-L, Join or leave the list (or change settings);* then follow the instructions.

**PENS** (Public Law Electronic Notification Service) is an e-mail service that notifies subscribers of recently enacted laws.

To subscribe, go to **http://listserv.gsa.gov/archives/publaws-l.html** and select *Join or leave the list (or change settings);* then follow the instructions.

**FEDREGTOC-L** and **PENS** are mailing lists only. We cannot respond to specific inquiries.

**Reference questions.** Send questions and comments about the Federal Register system to: **fedreg.info@nara.gov**

The Federal Register staff cannot interpret specific documents or regulations.

**Reminders.** Effective January 1, 2009, the Reminders, including Rules Going Into Effect and Comments Due Next Week, no longer appear in the Reader Aids section of the Federal Register. This information can be found online at **http://www.regulations.gov.**

**CFR Checklist.** Effective January 1, 2009, the CFR Checklist no longer appears in the Federal Register. This information can be found online at **http://bookstore.gpo.gov/.**

## FEDERAL REGISTER PAGES AND DATE, SEPTEMBER

53563–53840 ..... 1
53841–54004 ..... 2

## CFR PARTS AFFECTED DURING SEPTEMBER

At the end of each month, the Office of the Federal Register publishes separately a List of CFR Sections Affected (LSA), which lists parts and sections affected by documents published since the revision date of each title.

**3 CFR**

**Proclamations:**
8549 ..... 53563
**Executive Orders:**
13551 ..... 53837

**7 CFR**

6 ..... 53565

**12 CFR**

740 ..... 53841
745 ..... 53841

**14 CFR**

39 ..... 53843, 53846, 53849, 53851, 53855, 53857, 53859, 53861
73 ..... 53863
**Proposed Rules:**
39 ..... 53609
71 ..... 53876

**15 CFR**

730 ..... 53864
732 ..... 53864
734 ..... 53864
736 ..... 53864
738 ..... 53864
740 ..... 53864
742 ..... 53864
743 ..... 53864
744 ..... 53864
746 ..... 53864
747 ..... 53864
748 ..... 53864
750 ..... 53864
752 ..... 53864
754 ..... 53864
756 ..... 53864
758 ..... 53864
760 ..... 53864
762 ..... 53864
764 ..... 53864
766 ..... 53864
768 ..... 53864
770 ..... 53864
772 ..... 53864
774 ..... 53864
922 ..... 53567
**Proposed Rules:**
806 ..... 53611

**20 CFR**

641 ..... 53786

**21 CFR**

1310 ..... 53867

**27 CFR**

**Proposed Rules:**
9 ..... 53877

**33 CFR**

165 ..... 53572, 53574, 53870

**38 CFR**

**Proposed Rules:**
5 ..... 53744

**40 CFR**

180 ..... 53577, 53581, 53586
**Proposed Rules:**
51 ..... 53613
52 ..... 53613, 53883, 53892, 53907
60 ..... 53908
72 ..... 53613
78 ..... 53613
97 ..... 53613
140 ..... 53914

**49 CFR**

107 ..... 53593
171 ..... 53593
172 ..... 53593
173 ..... 53593
176 ..... 53593
177 ..... 53593
179 ..... 53593
180 ..... 53593

**50 CFR**

17 ..... 53598
20 ..... 53774
635 ..... 53871
648 ..... 53871
665 ..... 53606
679 ..... 53606, 53608, 53873, 53874, 53875
**Proposed Rules:**
17 ..... 53615
223 ..... 53925
648 ..... 53939

## LIST OF PUBLIC LAWS

This is a continuing list of public bills from the current session of Congress which have become Federal laws. It may be used in conjunction with "P L U S" (Public Laws Update Service) on 202–741–6043. This list is also available online at *http://www.archives.gov/federal-register/laws.html*.

The text of laws is not published in the **Federal Register** but may be ordered in "slip law" (individual pamphlet) form from the Superintendent of Documents, U.S. Government Printing Office, Washington, DC 20402 (phone, 202–512–1808). The text will also be made available on the Internet from GPO Access at *http://www.gpoaccess.gov/plaws/index.html*. Some laws may not yet be available.

**H.R. 511/P.L. 111–231**
To authorize the Secretary of Agriculture to terminate certain easements held by the Secretary on land owned by the Village of Caseyville, Illinois, and to terminate associated contractual arrangements with the Village. (Aug. 16, 2010; 124 Stat. 2489)

**H.R. 2097/P.L. 111–232**
Star-Spangled Banner Commemorative Coin Act (Aug. 16, 2010; 124 Stat. 2490)

**H.R. 3509/P.L. 111–233**
Agricultural Credit Act of 2010 (Aug. 16, 2010; 124 Stat. 2493)

**H.R. 4275/P.L. 111–234**
To designate the annex building under construction for the Elbert P. Tuttle United States Court of Appeals Building in Atlanta, Georgia, as the "John C. Godbold Federal Building". (Aug. 16, 2010; 124 Stat. 2494)

**H.R. 5278/P.L. 111–235**
To designate the facility of the United States Postal Service located at 405 West Second Street in Dixon, Illinois, as the "President Ronald W. Reagan Post Office Building". (Aug. 16, 2010; 124 Stat. 2495)

**H.R. 5395/P.L. 111–236**
To designate the facility of the United States Postal Service located at 151 North Maitland Avenue in Maitland, Florida, as the "Paula Hawkins Post Office Building". (Aug. 16, 2010; 124 Stat. 2496)

**H.R. 5552/P.L. 111–237**
Firearms Excise Tax Improvement Act of 2010 (Aug. 16, 2010; 124 Stat. 2497)

**Last List August 16, 2010**

## Public Laws Electronic Notification Service (PENS)

**PENS** is a free electronic mail notification service of newly enacted public laws. To subscribe, go to *http://listserv.gsa.gov/archives/publaws-l.html*

**Note:** This service is strictly for E-mail notification of new laws. The text of laws is not available through this service. **PENS** cannot respond to specific inquiries sent to this address.