Federal Register

12–9–10 Thursday
Vol. 75 No. 236 Dec. 9, 2010

Pages 76611–76920

The **FEDERAL REGISTER** (ISSN 0097–6326) is published daily, Monday through Friday, except official holidays, by the Office of the Federal Register, National Archives and Records Administration, Washington, DC 20408, under the Federal Register Act (44 U.S.C. Ch. 15) and the regulations of the Administrative Committee of the Federal Register (1 CFR Ch. I). The Superintendent of Documents, U.S. Government Printing Office, Washington, DC 20402 is the exclusive distributor of the official edition. Periodicals postage is paid at Washington, DC.

The **FEDERAL REGISTER** provides a uniform system for making available to the public regulations and legal notices issued by Federal agencies. These include Presidential proclamations and Executive Orders, Federal agency documents having general applicability and legal effect, documents required to be published by act of Congress, and other Federal agency documents of public interest.

Documents are on file for public inspection in the Office of the Federal Register the day before they are published, unless the issuing agency requests earlier filing. For a list of documents currently on file for public inspection, see *www.federalregister.gov.*

The seal of the National Archives and Records Administration authenticates the Federal Register as the official serial publication established under the Federal Register Act. Under 44 U.S.C. 1507, the contents of the **Federal Register** shall be judicially noticed.

The **Federal Register** is published in paper and on 24x microfiche. It is also available online at no charge as one of the databases on GPO Access, a service of the U.S. Government Printing Office.

The online edition of the **Federal Register**, *www.gpoaccess.gov/nara,* available through GPO Access, is issued under the authority of the Administrative Committee of the Federal Register as the official legal equivalent of the paper and microfiche editions (44 U.S.C. 4101 and 1 CFR 5.10). It is updated by 6 a.m. each day the **Federal Register** is published and includes both text and graphics from Volume 59, Number 1 (January 2, 1994) forward.

For more information about GPO Access, contact the GPO Access User Support Team, call toll free 1-888-293-6498; DC area 202-512-1530; fax at 202-512-1262; or via e-mail at *gpoaccess@gpo.gov.* The Support Team is available between 7:00 a.m. and 9:00 p.m. Eastern Time, Monday–Friday, except official holidays.

The annual subscription price for the **Federal Register** paper edition is $749 plus postage, or $808, plus postage, for a combined **Federal Register, Federal Register** Index and List of CFR Sections Affected (LSA) subscription; the microfiche edition of the **Federal Register** including the **Federal Register** Index and LSA is $165, plus postage. Six month subscriptions are available for one-half the annual rate. The prevailing postal rates will be applied to orders according to the delivery method requested. The price of a single copy of the daily **Federal Register,** including postage, is based on the number of pages: $11 for an issue containing less than 200 pages; $22 for an issue containing 200 to 400 pages; and $33 for an issue containing more than 400 pages. Single issues of the microfiche edition may be purchased for $3 per copy, including postage. Remit check or money order, made payable to the Superintendent of Documents, or charge to your GPO Deposit Account, VISA, MasterCard, American Express, or Discover. Mail to: U.S. Government Printing Office—New Orders, P.O. Box 979050, St. Louis, MO 63197-9000; or call toll free 1-866-512-1800, DC area 202-512-1800; or go to the U.S. Government Online Bookstore site, see *bookstore.gpo.gov.*

There are no restrictions on the republication of material appearing in the **Federal Register.**

How To Cite This Publication: Use the volume number and the page number. Example: 75 FR 12345.

Postmaster: Send address changes to the Superintendent of Documents, Federal Register, U.S. Government Printing Office, Washington, DC 20402, along with the entire mailing label from the last issue received.

SUBSCRIPTIONS AND COPIES

PUBLIC

Subscriptions:

Paper or fiche	**202–512–1800**
Assistance with public subscriptions	**202–512–1806**

General online information **202–512–1530; 1–888–293–6498**

Single copies/back copies:

Paper or fiche	**202–512–1800**
Assistance with public single copies	**1–866–512–1800 (Toll-Free)**

FEDERAL AGENCIES

Subscriptions:

Paper or fiche	**202–741–6005**
Assistance with Federal agency subscriptions	**202–741–6005**

Printed on recycled paper.

Contents

Federal Register

Vol. 75, No. 236

Thursday, December 9, 2010

Agency for Healthcare Research and Quality
NOTICES
Agency Information Collection Activities; Proposals, Submissions, and Approvals, 76736–76739

Agriculture Department
See Forest Service

Bureau of Ocean Energy Management, Regulation and Enforcement

RULES
Oil and Gas and Sulphur Operations in the Outer Continental Shelf:
Increased Safety Measures for Energy Development; Correction, 76632
NOTICES
Agency Information Collection Activities; Proposals, Submissions, and Approvals, 76750–76751

Civil Rights Commission
NOTICES
Meetings; Sunshine Act, 76698

Coast Guard
RULES
Drawbridge Operation Regulations:
Upper Mississippi River, Hannibal, MO, 76632–76633
PROPOSED RULES
Drawbridge Operation Regulations:
Isle of Wight (Sinepuxent) Bay, Ocean City, MD, 76688–76691
NOTICES
Detecting Oil Leaks from Vessels into Water, 76742–76744

Commerce Department
See Economic Analysis Bureau
See Industry and Security Bureau
See International Trade Administration
See National Oceanic and Atmospheric Administration

Commodity Futures Trading Commission
PROPOSED RULES
Reporting, Recordkeeping, and Daily Trading Records Requirements for Swap Dealers and Major Swap Participants, 76666–76677
NOTICES
Agency Information Collection Activities; Proposals, Submissions, and Approvals, 76705
Joint Public Roundtables:
Issues Related to Capital and Margin Requirements for Swaps and Security-Based Swaps, 76705–76706
Public Submissions on a Study Mandated by the Dodd–Frank Wall Street Reform and Consumer Protection Act; etc., 76706–76708

Consumer Product Safety Commission
RULES
Publicly Available Consumer Product Safety Information Database, 76832–76872
NOTICES
Extension of Date by Which Youth All-Terrain Vehicles Must Be Tested and Certified, 76708–76710

Defense Acquisition Regulations System
PROPOSED RULES
Defense Federal Acquisition Regulation Supplement:
Business Systems—Definition and Administration, 76692

Defense Department
See Defense Acquisition Regulations System

Drug Enforcement Administration
NOTICES
Importers of Controlled Substance; Applications:
Mylan Pharmaceuticals, Inc., Morgantown, WV, 76755
Importers of Controlled Substances; Registrations:
Alltech Associates, Inc., Deerfield, IL, 76755–76756
Manufacturers of Controlled Substances; Registrations:
Johnson Matthey Pharmaceutical Materials, Inc., Devens, MA, 76756
Matthey Pharma Services, North Andover, MA, 76756–76757
Norac Inc., Azusa, CA, 76756

Economic Analysis Bureau
RULES
Direct Investment Surveys:
BE–577, Quarterly Survey of U.S. Direct Investment Abroad—Direct Transactions of U.S. Reporter with Foreign Affiliate, 76630–76631

Election Assistance Commission
NOTICES
Publication of State Plan Pursuant to Help America Vote Act, 76894–76920

Energy Department
See Federal Energy Regulatory Commission

Environmental Protection Agency
RULES
Oregon; Correction of Federal Authorization of State's Hazardous Waste Management Program, 76633–76636
Regulation of Fuel and Fuel Additives:
2011 Renewable Fuel Standards, 76790–76830
PROPOSED RULES
Oregon; Correction of Federal Authorization of the State's Hazardous Waste Management Program, 76691
NOTICES
Regional Project Waivers Buy American Section of American Recovery and Reinvestment Act:
Central Iowa Water Association, 76728–76729

Executive Office of the President
See Presidential Documents

Farm Credit Administration
NOTICES
Market Access Agreement, 76729–76731

Federal Aviation Administration
RULES
Airworthiness Directives:
Rolls–Royce Deutschland Ltd & Co KG Models BR700–710A1–10; BR700–710A2–20; and BR700–710C4–11 Turbofan Engines, 76624–76626

Standard Instrument Approach Procedures, and Takeoff Minimums and Obstacle Departure Procedures; Miscellaneous Amendments, 76626–76630
PROPOSED RULES
Establishment of Area Navigation Routes:
Western United States, 76648–76650, 76652–76653
Modification of Class E Airspace:
Bryce Canyon, UT, 76650–76651
Special Conditions:
Boeing Model 747–8 Airplanes, Systems and Data Networks Security – Isolation or Protection, etc., 76647–76648
NOTICES
Change in Use of Aeronautical Property:
Houlton International Airport, Houlton, ME, 76777
Requests to Release Airport Property:
Kearney Municipal Airport, Kearney, NE, 76778

Federal Communications Commission
NOTICES
Request for Comment for Report on In-State Broadcast Programming, 76731–76732

Federal Election Commission
NOTICES
Meetings; Sunshine Act, 76732

Federal Emergency Management Agency
NOTICES
Meetings:
National Disaster Housing Task Force, 76744
National Disaster Housing Task Force Concept of Operations, 76744–76745

Federal Energy Regulatory Commission
NOTICES
Combined Filings, 76710–76726
Complaints:
Transmission Technology Solutions, LLC, et al. v. California Independent System Operator, Inc., 76726
Initial Market-Based Rate Filings Including Requests for Blanket Section 204 Authorization:
Evergreen Wind Power III, LLC, 76727–76728
Red Mesa Wind, LLC, 76727
San Luis Solar, LLC, 76726–76727

Federal Housing Finance Agency
RULES
Use of Community Development Loans by Community Financial Institutions to Secure Advances:
Secured Lending by Federal Home Loan Banks to Members and their Affiliates; Transfer of Advances and New Business Activity Regulations, 76617–76624

Federal Housing Finance Board
RULES
Use of Community Development Loans by Community Financial Institutions to Secure Advances:
Secured Lending by Federal Home Loan Banks to Members and their Affiliates; Transfer of Advances and New Business Activity Regulations, 76617–76624

Federal Railroad Administration
NOTICES
Environmental Impact Statements; Availability, etc.:
Milwaukee, WI, to Minneapolis, MN, Rail Corridor, 76778–76780
Petitions for Waivers of Compliance:
Madison Railroad, 76780
Roger W. Stabler and Gloria J. Stabler, 76780–76781

Federal Reserve System
NOTICES
Federal Open Market Committee; Domestic Policy Directive, 76733
Formations of, Acquisitions by, and Mergers of Bank Holding Companies, 76733

Federal Trade Commission
NOTICES
Granting of Requests for Early Termination of the Waiting Period under the Premerger Notification Rules, 76733–76736

Food and Drug Administration
NOTICES
Determination of Regulatory Review Period for Purposes of Patent Extension; ILARIS, 76739–76740
Determinations of Regulatory Review Periods for Purposes of Patent Extension; BEPREVE, 76740–76741
Determinations of Regulatory Review Periods for Purposes of Patent Extension; SABRIL, 76741–76742

Forest Service
NOTICES
Request for Proposals:
2011 Woody Biomass Utilization Grant Program, 76695–76698

Geological Survey
NOTICES
Agency Information Collection Activities; Proposals, Submissions, and Approvals, 76752

Health and Human Services Department
See Agency for Healthcare Research and Quality
See Food and Drug Administration
See National Institutes of Health

Homeland Security Department
See Coast Guard
See Federal Emergency Management Agency
See U.S. Citizenship and Immigration Services
See U.S. Customs and Border Protection

Housing and Urban Development Department
NOTICES
Agency Information Collection Activities; Proposals, Submissions, and Approvals:
Application for HUD/FHA Insured Mortgage HOPE for Homeowners, 76749
Transformation Initiative; Homeless Families Grant Program, 76747–76749
Transformation Initiative; Natural Experiments Grant Program, 76749–76750
Transformation Initiative; Sustainable Communities Research Grant Program, 76746–76747

Industry and Security Bureau
PROPOSED RULES
Commerce Control List:
Revising Descriptions of Items and Foreign Availability, 76664–76666
Export Control Modernization:
Strategic Trade Authorization License Exception, 76653–76664

Interior Department
See Bureau of Ocean Energy Management, Regulation and Enforcement
See Geological Survey
See Land Management Bureau

International Trade Administration
NOTICES
Consolidated Decisions on Applications for Duty-Free Entry of Electron Microscopes:
University of Connecticut, et al., 76699
Correction to Final Results of Antidumping Duty Administrative Review:
Chlorinated Isocyanurates from the People's Republic of China, 76699
Decisions on Applications for Duty-Free Entry of Scientific Instruments:
University of Texas at Austin, et al., 76699
Final Results of Antidumping Duty Administrative Review:
Stainless Steel Sheet and Strip in Coils from Taiwan, 76700–76703

International Trade Commission
NOTICES
Complaints:
Certain Handbags, Luggage, Accessories and Packaging Thereof, 76753–76754
Termination of Five-Year Review:
Non-Frozen Apple Juice Concentrate from China, 76754

Justice Department
See Drug Enforcement Administration
NOTICES
Lodging of Consent Decrees Under the Residential Lead-Based Paint Hazard Reduction Act, 76754–76755

Land Management Bureau
NOTICES
Meetings:
Front Range Resource Advisory Council, 76753
Southeast Oregon Resource Advisory Council, 76752–76753
Proposed Reinstatement of Terminated Oil and Gas Lease MTM 91627, 76753

National Highway Traffic Safety Administration
RULES
Anthropomorphic Test Devices:
Hybrid III 6-Year-Old Child Test Dummy, Hybrid III 6-Year-Old Weighted Child Test Dummy, 76636–76646
PROPOSED RULES
Federal Motor Vehicle Safety Standards:
Small Business Impacts of Motor Vehicle Safety, 76692–76694
NOTICES
Agency Information Collection Activities; Proposals, Submissions, and Approvals, 76781–76784

National Institutes of Health
NOTICES
Meetings:
Center for Scientific Review, 76742
National Institute of Mental Health, 76742

National Oceanic and Atmospheric Administration
RULES
Fisheries of the Caribbean, Gulf of Mexico, and South Atlantic:
Snapper–Grouper Fishery off the South Atlantic States; Emergency Rule to Delay Effectiveness of Closure, 76890–76892
Snapper–Grouper Fishery off the Southern Atlantic States; Amendment 17A, 76874–76890
NOTICES
Applications:
Marine Mammals; File No. 15750, 76703
Meetings:
New England Fishery Management Council, 76703–76704
Permits:
Endangered Species; File Nos. 13307, 13544, and 14586, 76704–76705

National Science Foundation
NOTICES
Meetings; Sunshine Act, 76757

Nuclear Regulatory Commission
NOTICES
Applications for Renewal:
STP Nuclear Operating Co., South Texas Project, 76757
Charter Renewals:
Licensing Support Network Advisory Review Panel, 76757–76758

Overseas Private Investment Corporation
NOTICES
Meetings; Sunshine Act, 76758

Personnel Management Office
RULES
Federal Employees Health Benefits Program Miscellaneous Changes, 76615–76617

Presidential Documents
PROCLAMATIONS
Special Observances:
Arctic National Wildlife Refuge; 50th Anniversary (Proc. 8613), 76611–76612
National Pearl Harbor Remembrance Day (Proc. 8614), 76613–76614

Securities and Exchange Commission
NOTICES
Joint Public Roundtables:
Issues Related to Capital and Margin Requirements for Swaps and Security-Based Swaps, 76705–76706
Program for Allocation of Regulatory Responsibilities:
BATS Exchange, Inc., BATS Y–Exchange, Inc., Chicago Board Options Exchange, Inc., et al., 76758–76759
Public Submissions on a Study Mandated by the Dodd–Frank Wall Street Reform and Consumer Protection Act; etc., 76706–76708
Self-Regulatory Organizations; Proposed Rule Changes:
Chicago Board Options Exchange, Inc., 76767–76768, 76770–76771
EDGA Exchange, Inc., 76768–76770
EDGX Exchange, Inc., 76763–76766
NASDAQ OMX BX, Inc., 76766–76767
NASDAQ Stock Market LLC, 76762–76763
NYSE Amex LLC, 76759–76762

State Department
NOTICES
Designation of Fahd Mohammed Ahmed al-Quso et al., as a Specially Designated Global Terrorist, 76771–76772
Request for Grant Proposals:
Future Leaders Exchange Civic Education Workshop, 76772–76777

Transportation Department
See Federal Aviation Administration
See Federal Railroad Administration
See Federal Transit Administration
See National Highway Traffic Safety Administration

Treasury Department
PROPOSED RULES
Anti-Money Laundering Program and Suspicious Activity Report Filing Requirements:
Residential Mortgage Lenders and Originators, 76677–76688

U.S. Citizenship and Immigration Services
NOTICES
Agency Information Collection Activities; Proposals, Submissions, and Approvals:
Application for Waiver of Grounds of Inadmissibility, 76745–76746

U.S. Customs and Border Protection
NOTICES
Agency Information Collection Activities; Proposals, Submissions, and Approvals:
Declaration of Ultimate Consignee That Articles Were Exported for Temporary Scientific or Educational Purposes, 76746

Veterans Affairs Department
NOTICES
Privacy Act; Systems of Records, 76784–76787

Separate Parts In This Issue

Part II
Environmental Protection Agency, 76790–76830

Part III
Consumer Product Safety Commission, 76832–76872

Part IV
Commerce Department, National Oceanic and Atmospheric Administration, 76874–76892

Part V
Election Assistance Commission, 76894–76920

Reader Aids
Consult the Reader Aids section at the end of this page for phone numbers, online resources, finding aids, reminders, and notice of recently enacted public laws.

To subscribe to the Federal Register Table of Contents LISTSERV electronic mailing list, go to http://listserv.access.gpo.gov and select Online mailing list archives, FEDREGTOC-L, Join or leave the list (or change settings); then follow the instructions.

CFR PARTS AFFECTED IN THIS ISSUE

A cumulative list of the parts affected this month can be found in the Reader Aids section at the end of this issue.

3 CFR
Proclamations:
8613 76611
8614 76613

5 CFR
890 76615
892 76615

12 CFR
950 76617
980 76617
1264 76617
1266 76617
1269 76617
1272 76617

14 CFR
39 76624
97 (2 documents) 76626, 76628
Proposed Rules:
25 76647
71 (3 documents) 76648, 76650, 76652

15 CFR
806 76630
Proposed Rules:
732 76653
738 76653
740 76653
743 76653
758 76653
774 (2 documents) 76653, 76664

16 CFR
1102 76832

17 CFR
Proposed Rules:
23 76666

30 CFR
250 76632

31 CFR
Proposed Rules:
103 76677

33 CFR
117 76632
Proposed Rules:
117 76688

40 CFR
80 76790
271 76633
Proposed Rules:
271 76691

48 CFR
Proposed Rules:
215 76692
234 76692
242 76692
244 76692
245 76692
252 76692

49 CFR
572 76636
Proposed Rules:
501 76692
509 76692
510 76692
511 76692
512 76692
520 76692
523 76692
525 76692
526 76692
571 76692

50 CFR
622 (2 documents) 76874, 76890

Federal Register
Vol. 75, No. 236
Thursday, December 9, 2010

Presidential Documents

Title 3—

The President

Proclamation 8613 of December 6, 2010

50th Anniversary of the Arctic National Wildlife Refuge

By the President of the United States of America

A Proclamation

Our public lands represent the American spirit and reflect our history, culture, and deep respect for wild and beautiful places. As we celebrate the 50th anniversary of the establishment of the Arctic National Wildlife Refuge, we remember that this breathtaking terrain holds great significance to our Nation. Stretching from the plains of the Arctic Sea to the soaring mountains of the Brooks Range and lush boreal forests of the Alaskan lowlands, the rugged splendor of the Arctic Refuge is among the most profoundly beautiful places in America.

Following the efforts of visionary conservationists, the Arctic National Wildlife Range was created in 1960 by President Dwight D. Eisenhower "for the purpose of preserving unique wildlife, wilderness, and recreational values." In 1980, under President Jimmy Carter, the area was renamed the Arctic National Wildlife Refuge and expanded to further recognize and protect the stunning variety of wildlife in the area. For 50 years, the Fish and Wildlife Service of the Department of the Interior has managed the Arctic National Wildlife Refuge, carefully balancing the needs of wildlife and their vital habitats.

In the decades since its establishment, the Arctic National Wildlife Refuge has continued to be one of our Nation's most pristine and cherished areas. In the decades to come, it should remain a place where wildlife populations, from roaming herds of caribou to grizzly bears and wolf packs, continue to thrive. The 19.6 million acres that comprise the Arctic Refuge are also home to Native American tribes, including the Inupiat and Gwich'in, and the resources of the Refuge sustain these populations and protect their indigenous traditions and way of life.

Today, the Arctic National Wildlife Refuge remains distinct in the American landscape, and we must remain committed to making responsible choices and ensuring the continued conservation of these wild lands.

Our Nation's great outdoors, whether our stunning national parks and refuges or cherished green spaces in our local communities, are truly a hallmark of our American identity. In commemorating five decades of protection and conservation of the Arctic National Wildlife Refuge, I encourage all Americans to recognize the beauty and diversity of all of America's open spaces. We are all stewards and trustees of this land, and we must ensure that our treasured wilderness and other natural areas will be part of our national heritage for generations to come.

NOW, THEREFORE, I, BARACK OBAMA, President of the United States of America, by virtue of the authority vested in me by the Constitution and the laws of the United States, do hereby proclaim December 6, 2010, as the 50th Anniversary of the Arctic National Wildlife Refuge. I call upon all Americans to observe this anniversary with appropriate programs, ceremonies, and activities.

IN WITNESS WHEREOF, I have hereunto set my hand this sixth day of December, in the year of our Lord two thousand ten, and of the Independence of the United States of America the two hundred and thirty-fifth.

[FR Doc. 2010–31127
Filed 12–8–10; 8:45 am]
Billing code 3195–W1–P

Presidential Documents

Proclamation 8614 of December 7, 2010

National Pearl Harbor Remembrance Day, 2010

By the President of the United States of America

A Proclamation

Nearly 70 years ago, on December 7, 1941, our service members and civilians awoke on a quiet Sunday to a surprise attack on Pearl Harbor by Japanese forces. Employing whatever weapons were at hand, those who defended Hawaii that fateful morning stand as examples of the selfless heroism that has always characterized the Armed Forces of the United States. More than 3,500 Americans were killed or wounded, and the images of burning battleships and the grief for lives lost were forever seared into our national memory.

The deadly attack on Pearl Harbor did not accomplish its mission of breaking the American spirit. Instead, it reinforced our resolve. Americans responded with unity and courage to a tragedy that President Franklin D. Roosevelt called "a date which will live in infamy." In the aftermath of Pearl Harbor, thousands of resolute individuals immediately volunteered their service to a grieving Nation. Sixteen million of America's sons and daughters served during World War II, and more than 400,000 paid the ultimate sacrifice in defense of life and liberty. Countless other patriots served on the home front, aiding the war effort by working in manufacturing plants, participating in rationing programs, or planting Victory gardens. In the face of great loss, America once again showed the resilience and strength that have always characterized our great country.

The Allied Forces battled the scourge of tyranny and ultimately spread the transformative march of freedom. As we recognize the 65th anniversary of the end of World War II this year, we honor not only those who gave their lives that December day, but also all those in uniform who travelled to distant theaters of war to halt the progression of totalitarianism and hate. In honor of all who have borne the cost of battle throughout America's history, let us pledge to meet our debt of honor and uphold the ideals they fought to preserve.

The Congress, by Public Law 103–308, as amended, has designated December 7 of each year as "National Pearl Harbor Remembrance Day."

NOW, THEREFORE, I, BARACK OBAMA, President of the United States of America, do hereby proclaim December 7, 2010, as National Pearl Harbor Remembrance Day. I encourage all Americans to observe this solemn day of remembrance and to honor our military, past and present, with appropriate ceremonies and activities. I urge all Federal agencies and interested organizations, groups, and individuals to fly the flag of the United States at half-staff this December 7 in honor of those American patriots who died as a result of their service at Pearl Harbor.

IN WITNESS WHEREOF, I have hereunto set my hand this seventh day of December, in the year of our Lord two thousand ten, and of the Independence of the United States of America the two hundred and thirty-fifth.

[FR Doc. 2010–31128
Filed 12–8–10; 8:45 am]
Billing code 3195–W1–P

Rules and Regulations

Federal Register
Vol. 75, No. 236
Thursday, December 9, 2010

This section of the FEDERAL REGISTER contains regulatory documents having general applicability and legal effect, most of which are keyed to and codified in the Code of Federal Regulations, which is published under 50 titles pursuant to 44 U.S.C. 1510.

The Code of Federal Regulations is sold by the Superintendent of Documents. Prices of new books are listed in the first FEDERAL REGISTER issue of each week.

OFFICE OF PERSONNEL MANAGEMENT

5 CFR Parts 890 and 892

RIN 3206–AL95

Federal Employees Health Benefits Program Miscellaneous Changes

AGENCY: U.S. Office of Personnel Management.

ACTION: Final rule.

SUMMARY: The U.S. Office of Personnel Management (OPM) is issuing a final regulation to provide for continuation of Federal Employees Health Benefits (FEHB) coverage for certain former Senate Restaurant employees who transferred to employment with a private contractor; to add a new opportunity for eligible employees to enroll in the FEHB, or to change FEHB enrollment status, under provisions of the Children's Health Insurance Program Reauthorization Act of 2009; and to allow eligible FEHB plans to offer three options, without the requirement that one of the options be a high deductible health plan.

DATES: Effective December 9, 2010.

FOR FURTHER INFORMATION CONTACT: Ronald Brown, Policy Analyst, at (202) 606–0004 or *e-mail: ronald.brown@opm.gov.*

SUPPLEMENTARY INFORMATION: On April 19, 2010, OPM published proposed regulations (75 FR 20314) with miscellaneous changes, clarifications, and corrections. We received several comments requesting that the proposed change to FEHB Open Season dates begin in 2011 rather than in 2010. We received several comments that changing the FEHB Open Season dates to November 1st through November 30th each year may result in employee confusion and additional administrative inconvenience because the Open Season will end immediately after the Thanksgiving holiday weekend, instead of ending the second full work week in December. Additionally, there was one comment that the Open Season could begin or end on a weekend, instead of a week day as is currently the case. We also received a comment that enrollees eligible for Medicare would have less flexibility to make health plan decisions if the FEHB Open Season dates ended in November. Currently, Medicare enrollees have from November 15 to December 31 to make changes in their Medicare coverage. Changing the FEHB Open Season dates would adversely affect this important segment of the FEHB population. Therefore, we have decided not to amend this provision of the FEHB regulations.

One commenter asked that we continue the High Deductible Health Plans (HDHPs), including Health Savings Accounts, within the FEHB. We do not have any plans to discontinue offering HDHPs as a choice under the Program.

We received one comment from an FEHB Plan requesting permission to offer two benefit levels or, alternatively, three options without offering an HDHP. However, the Plan is allowed by Federal law to only offer two levels of benefits. The authority to permit the Plan to offer more than two levels of benefits is a matter for Congress to consider and enact, if it chooses to do so. While we continue to look for ways to ensure that the FEHB offers choice and value, we are unable to permit a carrier any flexibility not allowed by law. We have no administrative authority to permit this change by revised ruling.

Background

Senate Restaurants Employees

Public Law 110–279, enacted July 17, 2008, provides for certain Federal employee benefits to be continued for certain employees of the Senate Restaurants after the operations of the Senate Restaurants are contracted to be performed by a private business concern. The law provides that a Senate Restaurants employee, who was an employee of the Architect of the Capitol on the date of enactment and who accepted employment by the private business concern as part of the transition, may elect to continue certain Federal benefits during continuous employment with the business concern. We are revising the FEHB regulations to address coverage for these individuals pursuant to relevant of Public Law 110–279. We are adding § 890.112 to subpart A.

New Enrollment Opportunities

Public Law 111–3, the Children's Health Insurance Program (CHIP) Reauthorization Act of 2009 (the Act), enacted on February 4, 2009, allows States to subsidize health insurance premium payments for certain low-income children who have access to qualified employer-sponsored health insurance coverage. FEHB-eligible enrollees who meet the criteria for child health assistance are eligible to receive State premium subsidy assistance payments to help them pay for their FEHB plan premiums. Current FEHB Program regulations already allow an eligible enrollee who loses coverage under the FEHB Program or another group health plan, including loss of eligibility or assistance under Medicaid or CHIP, to enroll or change enrollment from self only to self and family within the period beginning 31 days before and ending 60 days after the date of loss of coverage. The Act provides new opportunities for eligible employees to enroll in the FEHB Program or to change enrollment from self only to self and family when the employee or an eligible family member becomes eligible for premium assistance under CHIP. Employees must request the change in enrollment within 60 days after the date the employee or eligible family member is determined to be eligible for assistance. Employees may make these enrollment changes regardless of whether they are covered under premium conversion (pay premiums with pre-tax dollars). We are amending the regulations to reflect this enrollment opportunity. We are adding § 890.301(m).

Change in Options Offered

The current regulations state that an FEHB plan shall not have more than two options and a high deductible health plan. We are revising the regulations to allow employee organization plans and health maintenance organizations to both offer two options and a high deductible health plan or to offer three options, without the requirement that one of the options be a high deductible health plan. These plans are eligible by statute to offer more than two options.

This change will provide for more flexibility in contracting with health plans for modern types of benefits. These changes can be found in 890.201(b)(3)(i) and 890.201(b)(3)(ii).

Paperwork Reduction Act

The Paperwork Reduction Act of 1995 (PRA) imposes certain requirements on Federal agencies in connection with their conducting or sponsoring any collection of information as defined by the PRA. Certain provisions of this final rulemaking would result in new collection of information requirements within the meaning of the PRA. The Office of Personnel Management (OPM) therefore is revising a health benefits election form, Standard Form 2809.

In the future, the OPM intends to publish a 60-day **Federal Register** Notice including the revised form that ties to this final rulemaking. The information collected in the notice will be submitted to the Office of Management and Budget (OMB) for review. The OMB assigned collection control number for this form is: 3206–0160.

Regulatory Flexibility Act

I certify that this regulation will not have a significant economic impact on a substantial number of small entities because the regulation only affects health insurance benefits of Federal employees and annuitants. Executive Order 12866,

Regulatory Review

This rule has been reviewed by the Office of Management and Budget in accordance with Executive Order 12866.

Federalism

We have examined this rule in accordance with Executive Order 13132, Federalism, and have determined that this rule will not have any negative impact on the rights, roles, and responsibilities of State, local, or Tribal governments.

List of Subjects in 5 CFR Parts 890 and 892

Administrative practice and procedure, Employee benefit plans, Government employees, Reporting and recordkeeping requirements, Retirement.

U.S. Office of Personnel Management.

John Berry,

Director.

■ Accordingly, OPM is amending 5 CFR part 890 and part 892 as follows:

PART 890—FEDERAL EMPLOYEES HEALTH BENEFITS PROGRAM

■ 1. The authority citation for part 890 is revised to read as follows:

Authority: 5 U.S.C. 8913; Sec. 890.301 also issued under sec. 311 of Pub. L. 111–03, 123 Stat. 64; Sec. 890.111 also issued under section 1622(b) of Pub. L. 104–106, 110 Stat. 521; Sec. 890.112 also issued under section 1 of Pub. L. 110–279, 122 Stat. 2604; 5 U.S.C. 8913; Sec. 890.803 also issued under 50 U.S.C. 403p, 22 U.S.C. 4069c and 4069c–1; subpart L also issued under sec. 599C of Pub. L. 101–513, 104 Stat. 2064, as amended; Sec. 890.102 also issued under sections 11202(f), 11232(e), 11246 (b) and (c) of Pub. L. 105–33, 111 Stat. 251; and section 721 of Pub. L. 105–261, 112 Stat. 2061.

Subpart A—Administration and General Provisions

■ 2. Add § 890.112 to subpart A to read as follows:

§ 890.112 Continuation of coverage for certain Senate Restaurants employees.

(a) A Senate Restaurants employee who was an employee of the Architect of the Capitol on July 17, 2008, who accepted employment with the private business concern to which the Senate Restaurants' food service operations were transferred as described in section 1 of Public Law 110–279, and who elected to continue his or her Federal employee retirement benefits is deemed to be an employee for purposes of this part during continuous employment with the private business concern or its successor. The individual shall be entitled to the benefits of, and be subject to all conditions under, the FEHB Program on the same basis as if the individual were an employee of the Federal Government.

(b) Cessation of employment with the private business concern or its successor for any period terminates eligibility for coverage under the FEHB Program as an employee during any subsequent employment by the private business concern.

(c) The private business concern or its successor must make arrangements for the withholding from pay of an individual described by paragraph (a) of this section of an amount equal to the premiums withheld from Federal employees' pay for FEHB coverage and, in accordance with procedures established by OPM, pay into the Employees Health Benefits Fund the amounts deducted from the individual's pay.

(d) The private business concern or its successor shall, in accordance with procedures established by OPM, pay into the Employees Health Benefits Fund amounts equal to any agency contributions required under the FEHB Program.

Subpart B—Health Benefits Plans

■ 3. Revise § 890.201(b)(3) to read as follows:

§ 890.201 Minimum standards for health benefits plans.

* * * * *

(b) * * *

(3)(i) Have more than two options and a high deductible health plan (26 U.S.C. 223(c)(2)(A)) if the plan is described under 5 U.S.C. 8903(1) or (2); or

(ii) Have either more than three options, or more than two options and a high deductible health plan (26 U.S.C. 223(c)(2)(A)) if the plan is described under 5 U.S.C. 8903(3) or (4).

* * * * *

Subpart C—Enrollment

■ 4. Add a new paragraph (m) to § 890.301 to read as follows:

§ 890.301 Opportunities for employees who are not participants in premium conversion to enroll or change enrollment; effective dates.

* * * * *

(m) An employee or eligible family member becomes eligible for premium assistance under Medicaid or a State Children's Health Insurance Program (CHIP). An eligible employee may enroll and an enrolled employee may change his or her enrollment from self only to self and family, from one plan or option to another, or make any combination of these changes when the employee or an eligible family member of the employee becomes eligible for premium assistance under a Medicaid plan or CHIP. An employee must enroll or change his or her enrollment within 60 days after the date the employee or family member is determined to be eligible for assistance.

PART 892—FEDERAL FLEXIBLE BENEFITS PLAN: PRE-TAX PAYMENT OF HEALTH BENEFITS PREMIUMS

■ 5. The authority citation for part 892 is revised to read as follows:

Authority: 5 U.S.C 8913; 5 U.S.C. 1103(a)(7); 26 U.S.C. 125; Sec. 892.101 also issued under sec. 311 of Pub. L. 111–3, 123 Stat. 64.

Subpart A—Administration and General Provisions

■ 6. In § 892.101, amend the definition of *qualifying life event* by adding a new paragraph (13) to read as follows:

§ 892.101 Definitions.

* * * * *

*Qualifying life event * * **

(13) An employee or eligible family member becomes eligible for premium assistance under Medicaid or a State Children's Health Insurance Program (CHIP). An eligible employee may enroll and an enrolled employee may change his or her enrollment from self only to self and family, from one plan or option to another, or make any combination of these changes when the employee or an eligible family member of the employee becomes eligible for premium assistance under a Medicaid plan or a State Children's Health Insurance Program. An employee must enroll or change his or her enrollment within 60 days after the date the employee or family member is determined to be eligible for assistance.

[FR Doc. 2010–30962 Filed 12–8–10; 8:45 am]

BILLING CODE 6325–39–P

FEDERAL HOUSING FINANCE BOARD

12 CFR Parts 950 and 980

FEDERAL HOUSING FINANCE AGENCY

12 CFR Parts 1264, 1266, 1269, and 1272

RIN 2590–AA24

Use of Community Development Loans by Community Financial Institutions To Secure Advances; Secured Lending by Federal Home Loan Banks to Members and Their Affiliates; Transfer of Advances and New Business Activity Regulations

AGENCY: Federal Housing Finance Board, Federal Housing Finance Agency.

ACTION: Final rule.

SUMMARY: Section 1211 of the Housing and Economic Recovery Act of 2008 (HERA) amended the Federal Home Loan Bank Act (Bank Act) to expand the types of eligible collateral that community financial institution (CFI) members may pledge to secure Federal Home Loan Bank (Bank) advances to include secured loans for community development activities and to allow Banks to make long term advances to CFI members for purposes of financing community development activities. Section 1211 further provides that the Federal Housing Finance Agency (FHFA) shall define the term "community development activities" by regulation. To implement these provisions, FHFA is amending the advances regulation to allow CFI members to pledge community development loans as collateral for advances and is adopting a definition of "community development" as proposed. The final rule also will transfer the advances and new business activities rules from parts 950 and 980 of the Federal Housing Finance Board (FHFB) regulations, to new parts 1266 and 1272 of the FHFA regulations, respectively, and make other conforming amendments. Finally, the final rule will make a change to the advances regulation to incorporate a long-standing policy previously established by the FHFB that secured lending to a member of any Bank is an advance that must meet the requirements of the advances regulation. The final rule language has been clarified to assure that certain types of transactions, such as derivatives, will not be considered secured lending for the purposes of this provision. The new provision addressing secured lending does not include a prohibition on secured transactions with affiliates of members, as was initially proposed.

DATES: The final rule is effective on January 10, 2011.

FOR FURTHER INFORMATION CONTACT: Thomas E. Joseph, Senior Attorney Advisor, *thomas.joseph@fhfa.gov*, (202) 414–3095 (not a toll-free number); Office of General Counsel, Federal Housing Finance Agency, Fourth Floor, 1700 G Street, NW., Washington, DC 20552; or Julie Paller, Senior Financial Analyst, *julie.paller@fhfa.gov*, 202–408–2842 (not a toll-free number); Division of Federal Home Loan Bank Regulation, Federal Housing Finance Agency, 1625 Eye Street, NW., Washington, DC 20006. The telephone number for the Telecommunications Device for the Hearing Impaired is (800) 877–8339.

SUPPLEMENTARY INFORMATION:

I. Background

A. Establishment of FHFA

Effective July 30, 2008, Division A of HERA, Public Law 110–289, 122 Stat. 2654 (2008), created FHFA as an independent agency of the Federal government. HERA transferred the supervisory and oversight responsibilities over the Federal National Mortgage Association (Fannie Mae), the Federal Home Loan Mortgage Corporation (Freddie Mac) (collectively, Enterprises), the Banks, and the Bank System's Office of Finance, from the Office of Federal Housing Enterprise Oversight (OFHEO) and the FHFB to FHFA. FHFA is responsible for ensuring that the Enterprises and the Banks operate in a safe and sound manner, including being capitalized adequately, and that they carry out their public policy missions, including fostering liquid, efficient, competitive, and resilient national housing finance markets. The Enterprises and the Banks continue to operate under regulations promulgated by OFHEO and FHFB until FHFA issues its own regulations. *See* section 1302 Public Law 110–289, 122 Stat. 2795.

B. Statutory and Regulatory Background

Each Bank is a cooperative institution that is owned by its members. Any eligible institution (generally a federally insured depository institution or state-regulated insurance company) may become a member of a Bank if it satisfies certain criteria and purchases a specified amount of the Bank's capital stock. 12 U.S.C. 1424, 1426; 12 CFR part 1263. Only members or certain eligible housing associates (such as state housing finance agencies) may obtain access to secured loans, known as advances, or other products provided by a Bank. 12 U.S.C. 1426(a)(4), 1430(a), 1430b.

Prior to HERA, CFIs were defined under the Bank Act as depository institutions insured under the Federal Deposit Insurance Act (12 U.S.C. 1811 *et seq.*) with average total assets of less than $500 million, as adjusted annually for inflation thereafter. 12 U.S.C. 1422(13) (2008). Section 1211 of HERA raised the $500 million average total assets cap to $1 billion. *See* section 1211 Public Law No. 110–289, 122 Stat. 2790 (amending 12 U.S.C. 1422(10)). By Notice published in the **Federal Register** in February 2009, FHFA adjusted the $1 billion figure for inflation to $1.011 billion. 74 FR 7438 (Feb. 17, 2009). As part of FHFA's separate rulemaking addressing Bank membership for community development financial institutions, FHFA included a technical amendment to the definition of "CFI" to implement the average total asset cap increase to $1 billion made by HERA.[1] *See* 74 FR 22848, 22857 (May 15, 2009); 75 FR 678, 691 (Jan. 5, 2010).

Under the Bank Act, any member, including a CFI, that wishes to borrow from its Bank must pledge certain types of collateral to secure its repayment obligation on advances, and must otherwise demonstrate to the Bank that it is creditworthy. 12 U.S.C. 1430(a). Each Bank sets its own lending and collateral policies, which may vary from Bank to Bank and will apply to all borrowing members of that Bank. Prior to HERA, section 10(a)(3) of the Bank

[1] FHFA also relocated the part 925 regulations to part 1263 of the FHFA's regulations. 75 FR 678.

Act specified that a member may pledge the following types of collateral to secure an advance: (i) Fully disbursed, whole first mortgages on improved residential property not more than 90 days delinquent, or securities representing a whole interest in such mortgages; (ii) securities issued, insured or guaranteed by the U.S. Government or any agency thereof; (iii) cash or deposits of a Bank; (iv) other real estate related collateral acceptable to the Bank, provided the value of such collateral is readily ascertainable and the Bank can perfect its security interest in the collateral; and (v) for institutions that qualify as CFIs, secured loans for small business or agriculture, or securities representing a whole interest in such secured loans.[2] *See* 12 U.S.C. 1430(a)(3). Section 1211 of HERA amended section 10(a)(3)(E) of the Bank Act to broaden the collateral that may be pledged by CFI members to include secured loans for community development activities. Section 1211 Public Law 110–289, 122 Stat. 2790 (*amending* 12 U.S.C. 1430(a)(3)(E)).

In addition, prior to HERA, section 10(a)(2) of the Bank Act provided that a Bank could make a long-term advance to a member only for the purposes of providing funds to the member for residential housing finance, except that it also allowed long-term advances to CFI members for purposes of funding small business, small farm, and small agri-business lending.[3] 12 U.S.C. 1430(a)(2). Section 1211 of HERA amended section 10(a)(2)(B) of the Bank Act so that a Bank also may make long-term advances to a CFI member to fund community development activities. Section 1211, Public Law 110–289, 122 Stat. 2790 (*amending* 12 U.S.C. 1430(a)(2)(B)).

Section 1211 of HERA also amended section 10(a)(6) of the Bank Act to provide that the term "community development activities" shall have the meaning given such term by regulation by the Director of FHFA. *Id.* (*amending* 12 U.S.C. 1430(a)(6)). The legislative history of HERA does not further illuminate Congress' intent in making these amendments.

[2] In addition, the Banks under their Community Investment Cash Advance Programs (CICA) may provide advances to support economic development that benefit persons based on defined targeted income levels or targeted geographic areas. 12 CFR part 952.

[3] Applicable regulations define a long-term advance as one "with an original term to maturity of greater than five years."

C. Considerations of Differences Between the Banks and the Enterprises

Section 1201 of HERA requires the Director, when promulgating regulations relating to the Banks, to consider the following differences between the Banks and the Enterprises: cooperative ownership structure; mission of providing liquidity to members; affordable housing and community development mission; capital structure; and joint and several liability. *See* section 1201 Public Law 110–289, 122 Stat. 2782–83 (*amending* 12 U.S.C. 4513). The Director also may consider any other differences that are deemed appropriate. In preparing this final regulation, FHFA considered the differences between the Banks and the Enterprises as they relate to the above factors. As part of its proposed rulemaking, FHFA also requested comments from the public about whether differences related to these factors should result in any revisions to the proposal, but received no comments on this point in response.

II. The Final Regulation

A. The Proposed Rule and Comments Received

FHFA published a proposed rule in the **Federal Register** on February 23, 2010 to implement the provisions in HERA allowing CFIs to pledge "community development loans" as collateral for advances and the Banks to make long term advances to a CFI member to fund community development activities. 75 FR 7990 (Feb. 23, 2010). As part of its implementation of these provisions, FHFA proposed defining "community development" as having:

> the same meaning as under the definition set forth in the Community Reinvestment rule for the Federal Reserve System (12 CFR part 228), Federal Deposit Insurance Corporation (12 CFR part 345), the Office of Thrift Supervision (12 CFR part 563e) or the Office of the Comptroller of the Currency (12 CFR part 25), whichever is the CFI member's primary federal regulator.

Id. at 7994.

FHFA also proposed defining "community development loan" as:

> A loan that has as its primary purpose community development, but such loans shall not include: (1) Any loan or instrument that qualifies as eligible security for an advance under § 1266.7(a) of this part; or (2) Consumer loans or credit extended to one or more individuals for household, family or other personal expenditures.

Id.

The proposed rule also would have amended the advances regulation to incorporate a long-standing Finance Board policy that deemed any form of secured lending by a Bank to a Bank System member an advance subject to the rules governing advances. The proposal would have extended this policy to cover affiliates of any members, and, as a consequence, would have prohibited a Bank from entering into secured lending transactions with member affiliates. Finally, the proposed rule would have transferred the advances and the new business activity regulation, respectively, from parts 950 and 980 of the Finance Board regulations to parts 1266 and 1272 of the FHFA regulations.

FHFA received eleven comment letters on the proposed rule. Eleven of the twelve Banks commented, including a joint letter which was signed by three Banks. One letter came from an association representing municipal governments and one letter came from a private citizen. All the Bank comment letters addressed proposed § 1266.2(e) of the rule, which would have required secured transactions with the member of any Bank to meet the requirements of an advance and would have prohibited secured transactions between a Bank and an affiliate of a member of any Bank. As is discussed below, these letters generally suggested clarification to the proposed rule language so that any restriction did not carry unintended consequences and limit transactions beyond borrowings by members. These letters also stated that the proposed restrictions on secured transactions with affiliates of members would eliminate an important and safe liquidity investment for the Banks and urged that the provision be substantially revised in this respect or not be adopted.

Two comment letters, including the joint Bank letter, addressed the proposed provisions allowing "community development loans" to be pledged as collateral by CFIs. Both letters made similar comments and generally urged FHFA to expand the definitions of "community development" and "community development loan" and not tie the definition to criteria based on income targeting. These comments are also addressed more fully below. No comments were made on other aspects of the proposed rule. All comment letters are posted on the FHFA Internet Web site at *http://www.fhfa.gov.*

B. Final Rule Provisions

Definitions—§ 1266.1

FHFA proposed adding definitions for "community development" and "community development loan" to the advances regulation to help implement

the HERA provision allowing CFI members to pledge community development loans to secure advances. In the proposed rule, "community development" was defined with reference to the definition for this term adopted by CFI members' primary federal regulators under Community Reinvestment Act (CRA) regulations.[4] In turn, FHFA proposed to define "community development loan" as a loan that has community development as its primary purpose. Because FHFA did not intend the proposed definition to call into question the validity of any collateral allowed under the advances regulation to be pledged by all members, the proposed definition of "community development loan" excluded categories of eligible collateral identified in § 950.7(a) of the advances rule[5] from its scope. FHFA specifically requested comments on whether, and how, these proposed definitions might be altered to better help CFI members fund community development activities while continuing to assure that advances be secured only by high quality collateral. 75 FR at 7992.

FHFA received two comments on these definitions. Both comments urged FHFA to adopt a broader definition for "community development" that would not include the income targeting criteria inherent in the proposed definition. They argued (albeit for different reasons) that the proposed definition of "community lending" was contrary to Congressional intent in adopting section 1211 and that a broader definition would better meet Congress' reasons for including this provision in HERA. Instead of the proposed definition, the commenters suggested developing a definition based on the one used for "economic development projects" in FHFA's current Community Investment Cash Advance Programs (CICA) regulations.[6] One commenter proposed a specific definition for "community development" that included criteria that would limit the definition to projects or activities that were the recipient of any form of federal, state or local government support. The commenter believed such criteria would help identify the activity or project as one viewed by federal, state or local governments as important for the community in question.

FHFA has considered these comments, but generally does not find them persuasive. As noted when FHFA proposed its definition of "community development," the legislative history of HERA does not clearly illuminate Congressional intent in allowing secured loans for community development to be pledged as collateral by CFI members to support advances. Instead, section 1211(b) of HERA provided FHFA with broad flexibility to define the term "community development activities." More importantly, although HERA did not specify income targeting criteria in the provision concerning "community development," the concept of community development lending is not new in banking law and is a well-developed concept as evidenced by the Community Reinvestment Act, and the regulations adopted by federal banking regulators to implement that statute. As it noted in proposing this definition, FHFA is relying on this long-standing regulatory history in defining the term. Moreover, by linking the definition of "community development" to the Community Reinvestment Act rules of the banking regulators, FHFA will ensure that future changes and developments in this area will be captured in FHFA's definition of "community development".

FHFA believes that this approach will help CFI members to use advances to provide financing for their communities' development needs, as those needs are embodied by those members' CRA obligations. 75 FR at 7992. FHFA, therefore, is adopting the definition of "community development" as proposed.

FHFA also is adopting the definition of "community development loan" generally as proposed. In this respect, a community development loan is a loan that has community development as its primary purpose. The final rule, as adopted, also clarifies that the term "community development loan" includes a participation interest in a community development loan.

FHFA recognizes that many loans that are extended to support community development already will be acceptable collateral for advances under existing Bank Act provisions and FHFA regulations. As a consequence, the definition excludes from the meaning of "community development loan," any loan that qualifies as acceptable collateral under other provisions of the Bank Act and FHFA regulations. As explained when FHFA initially proposed this definition, FHFA does not intend to call into question the validity of any security pledged (or to be pledged) under the existing categories of eligible collateral. Thus, the definition of "community development loan" excludes from its scope, categories of eligible collateral now identified in § 950.7(a) of the advances rule,[7] which can be pledged by any member to secure an advance, as well as small agri-business loan, small business loan, or small farm loan, which currently are forms of acceptable collateral for CFI members.[8] The definition of "community development loan" also specifically excludes consumer loans or credit extended to one or more individuals for household, family, or other personal expenditures. This exclusion does not change the status of any loan that qualifies as eligible collateral for advances under existing categories of collateral in the Bank Act or current regulations. For example, the new language does not affect the status of home equity loans as other real estate-related collateral eligible to secure advances.

Commenters also urged that FHFA include municipal bonds within the definition of community development loans so that municipal bonds could be accepted as collateral from CFIs to secure advances. They noted that FHFA regulations already allow members to use municipal bonds as collateral to secure letters of credit where the letter of credit helps facilitate residential

[4] *See* 12 CFR 25.12, 228.12, 345.12, and 563e.12. Under this definition, "community development" would have encompassed affordable housing, community services targeted to low- and moderate-income individuals, economic development activities through financing of businesses and farms that meet size eligibility standards of the Small Business Administration's Development Company or Small Business Investment Company Programs or have gross annual revenues of $1 million or less, and activities that revitalize or stabilize low- or moderate-income geographies, designated disaster areas, or certain designated, distressed, or underserved non-metropolitan middle-income geographies.

[5] As part of the transfer of the advances regulation to part 1266, this provision will be redesignated as § 1266.7(a). This provision identifies collateral that can be pledged by all Bank members to secure advances.

[6] *See* 12 CFR 952.1.

[7] As part of the proposed transfer of the advances regulation to part 1266, this provision would be redesignated as § 1266.7(a).

[8] When proposing the definition of "community development loan," FHFA noted that because small agri-business, small business and small farm loans can be pledged only by CFI members, there was no need to exclude them from the definition of community development loan, despite likely overlap in these existing categories of collateral and community development loans. *See* 75 FR at 7992. Upon reconsideration, such overlap may nonetheless cause some confusion, especially when determining whether the new business activity requirements applied to a loan that may fall both within the definition of community development loan and the definition of one of the other categories of CFI member only collateral. Moreover, because small agri-business, small business, and small farm loans are defined as loans that are within legal lending limits of the CFI member and reported on specific regulatory financial reports of that member, these loans are easy to identify, and it will be straightforward to determine whether loans fall into one of the existing categories of eligible CFI collateral or whether the loans may qualify only as a "community development loan" to be pledged as collateral for an advance.

housing finance or community lending. 12 CFR 1269.2(c)(2).

Section 1266.7(b)(1) as amended by this rulemaking, however, already allows the Banks to accept from CFI members, as collateral for advances, any security to the extent that the security represents a whole interest in a secured, small agri-business, small business, small farm or community development loan. This restriction limiting the type of securities that can be pledged under the special CFI collateral provision is statutory, and the wording of § 1266.7(b)(1) closely follows that of the Bank Act. *See* 12 U.S.C. 1430(a)(3)(E). Extending the definition of community development loans to include all municipal securities would go beyond what is authorized in the Bank Act and would not be consistent with the statutory limitation.[9] FHFA, therefore, is not altering the final definition of community development loan as requested. CFI members, of course, can still pledge as collateral for advances any municipal bond to the extent allowed by § 1266.7(b)(1), as that provision is being amended by this rulemaking.

To implement the HERA provisions which allow CFIs to rely on long-term advances to fund "community development loans," FHFA proposed amending the definition of "residential housing finance assets" to incorporate "community development loans" into the definition. *See* 75 FR at 7993. To avoid confusion, FHFA also proposed removing the reference to "community lending" from the "residential housing finance assets" definition and incorporating each element of "community lending," as defined in § 900.2,[10] into the definition. Thus, the proposed definition specifically referred to "loans or investments providing financing for economic development projects for targeted beneficiaries" and for CFI members, to the extent not already included, "small business loans, small farm loans, small agri-business loans, or community development loans." Other than adding "community development loans," the proposed changes were editorial in nature and did not alter the scope of the definition for "residential housing finance assets." No comments were received on these changes and the definition of "residential housing finance assets" is being adopted as proposed.

FHFA also proposed adding to newly designated § 1266.1 definitions for "Bank Act," "advances," "Bank," and "targeted beneficiaries." These definitions were contained in § 900.1 or § 900.2 of the FHFB rules, and FHFA proposed to carry them over to newly designated part 1266 without substantive change.[11] No comments were received on these definitions and FHFA is adopting them as proposed.

Secured Lending—§ 1266.2(e)

FHFA proposed amending newly designated § 1266.2 of the advances regulation to incorporate a long-standing position that any secured lending by a Bank to members is deemed an advance subject to all requirements related to advances. This position was first taken by the FHFB in 1995 by resolution; this resolution has not been rescinded and is still in effect. Fin. Brd. Res. No. 95–13 (Aug. 9, 1995). FHFA proposed incorporating this position into the regulation to prevent Banks from using forms of secured lending to members, such as reverse repurchase transactions, to avoid specific requirements and obligations associated with making advances to members, including stock purchase requirements. To assure that the proposed provision could not be circumvented by a Bank extending secured credit to an affiliate of a member, the proposed provision also prohibited secured lending to any non-member, affiliate of a member, given that such non-member affiliates would not be eligible to receive an advance under the regulations.

Almost all the comment letters addressed proposed § 1266.2(e). Most of these commenters noted that the broad wording in the proposed amendment could prevent derivative transactions or similar transactions in which counterparties would be required to post collateral. Commenters suggested that the rule language should refer to secured transactions for "money borrowed" to distinguish reverse repurchase agreements and similar transaction from other types of transactions that may create credit exposures. FHFA agrees that the proposed provision is overly broad. It was not FHFA's intent to prevent the Banks from entering into derivative transactions or prohibit the Banks from requiring members that may be a derivative counterparty from posting collateral. Nor was it FHFA's intent to prevent Banks from accepting collateral to secure other types of member obligations to the Bank such as those arising under the members' credit enhancement obligations for mortgages sold to Banks under their AMA programs. *See* 12 CFR 955.3(b)(2).

FHFA is therefore adopting as part of the final rule language similar to that proposed in commenters' letters. The rule now refers to "all secured transactions, regardless of the form of the transaction, for money borrowed from a Bank by a member of any Bank," so that reverse repurchase type lending transactions will be covered, but not other member transactions or obligations that may create a credit exposure to a Bank but do not arise from the Bank lending cash funds to the member. As with the proposed rule, the final rule continues to cover these types of transactions if undertaken between a Bank and a member of any Bank, and does not apply only to transactions between a Bank and one of its own members.

Commenters also pointed out that most acceptable reverse repurchase agreement counterparties would be affiliates of a Bank System member, since most major financial institutions in the United States have at least one affiliate that is a member of some Bank. They also noted that reverse repurchase agreements were an important short term liquid investment for the Banks, especially in times of economic stress when unsecured money-market investments may be a less desirable option on a risk-adjusted basis. These commenters therefore urged that the rule exclude from the prohibition on secured transactions with affiliates of members: (i) Primary dealers in government securities and (ii) other counterparties meeting the credit and other risk management requirements established by a Bank. One commenter stated that the rule should exclude broker-dealer affiliates of members from the prohibition of the rule. A number of commenters also pointed out that the provision prohibiting a Bank from

[9] The comparison made by commenters to the provision in the letter of credit regulation is somewhat misplaced. Prior to adopting the letter of credit regulation, the Finance Board determined that, as a matter of law, the Bank Act did not require that letters of credit be collateralized. It did, however, conclude that such a requirement was advisable as a matter of safe and sound banking practice and provided for the acceptance of certain types of collateral for letters of credit that the Banks, by law, were not permitted to accept to secure advances. *See* Final Rule: Standby Letters of Credit, 63 FR 65693 (Nov. 30, 1998); and Office of General Counsel Opinion, 1998–GC–14 (Oct. 28, 1998). The HERA amendments that will be implemented by this rule, however, limit eligible advance collateral for a CFI member to secured community development loans or securities representing a whole interest in such secured loans.

[10] The definition of "residential housing finance assets" in § 950.1 of the Finance Board's advances regulations incorrectly states that "community lending" is defined in § 900.1 rather than in § 900.2.

[11] The definitions in part 900 of the FHFB rules apply only to regulations contained in chapter 9 of Title 12 of the Code of Federal Regulations. Thus, definitions in part 900 are no longer applicable to the advances and the new business activities regulations once they are transferred to new parts 1266 and 1272.

making a secured extension of credit to "an affiliate of any member" could technically prevent the Bank from making advances to members that were affiliates of other members and urged that the language prohibiting secured lending to affiliates of members be refined in this respect.

After consideration of the comments, FHFA has determined not to adopt, as part of the final rule, the proposed prohibition on reverse repurchase agreements and similar secured lending transactions with affiliates of members. While FHFA had an indication that certain Banks were considering entering into reverse repurchase agreements, each Bank with members of the other Bank, to help these members avoid additional stock purchases, FHFA has no indication that these transactions were being considered with affiliates of members as a way to avoid stock purchase requirements. FHFA decided that it should not prevent Banks from entering into important liquidity investments at this time on the possibility that Banks may use reverse repurchase agreements with affiliates of members as a way to effectively make secured extensions of credit to members without requiring member stock purchases. If FHFA becomes aware that the Banks are entering into reverse repurchase agreements with member affiliates, not for purposes of making liquidity investments, but as a means of facilitating member avoidance of additional stock purchase requirements, it may reconsider this position.

Long Term Advances—§ 1266.3

FHFA proposed to redesignate § 950.3 of the Finance Board's advances regulation as § 1266.3, and to make certain conforming changes to the provision. No comments were received on these changes, and FHFA is adopting § 1266.3 as proposed. *See* 75 FR at 7993. Section 1266.3 implements section 10(a)(2) of the Bank Act, as amended by HERA, and provides that a Bank shall make long-term advances only for the purpose of enabling a member to purchase or fund new or existing residential housing finance assets, a term defined in § 1266.1 to include, for CFI members, small business loans, small farm loans, small agri-business loans, and community development loans. Thus, the only change being made in § 1266.3 is to remove, as redundant, references to small business loans, small farm loans, and small agri-business loans that were contained in former § 950.3.

Community Development Loans as Collateral—§ 1266.7(b)(1)

FHFA proposed to implement the HERA provision allowing CFI members to pledge loans for community development activities as collateral for advances by adding "community development loans" to the list of CFI-specific collateral set forth in the redesignated § 1266.7(b)(1). No other changes were proposed to this provision. No comments were received on this provision and it is being adopted as proposed.

A Bank's acceptance of "community development loans" will need to meet the same requirements as its acceptance of other types of CFI collateral. Thus, community development loans pledged by CFI members to secure advances will need to be fully secured by collateral other than real estate. In addition, any eligible community development loan will have to have a readily ascertainable value, be able to be reliably discounted to account for liquidation or other risk, and be able to be liquidated in due course, and the Bank would have to be able to perfect a security interest in such loan. A Bank's acceptance of specific types of "community development loans" to secure an advance will also be subject to its first meeting the requirements of the new business activities rule, which will be redesignated as 12 CFR part 1272 by this rulemaking, and any other applicable FHFA regulations, guidance or policies. As already noted, the amendments being adopted here also will allow a Bank to accept, as collateral for advances, a security representing a whole interest in secured community development loans, subject to the Bank's first fulfilling any obligations under the new business activities rule.

Clarification of Provision—§ 1266.11

FHFA is also adopting language in newly designated § 1266.11 to make clear that the provision only applies to the one Bank that has not yet implemented the capital structure plan required under the Gramm-Leach-Bliley Act (GLB Act). The requirements in newly designated § 1266.11 were all adopted prior to the passage of the GLB Act in November 1999 and have not been amended since the passage of the GLB Act. *See* 64 FR 16788 (Apr. 6, 1999) and 58 FR 29456 (May 20, 1993). The provision addresses stock purchase and redemption requirements. The GLB Act changed these requirements for a Bank, once the Bank implemented its capital plan and converted to the capital structure required under the GLB Act. *See* 12 U.S.C. §§ 1426(a)(6) and (c). Banks that have converted to the GLB Act structure are required to set forth in their capital plans the requirements governing member stock purchases and member rights with regard to the redemption and repurchase of Bank stock, consistent with the regulations in 12 CFR parts 931 and 933. To avoid any confusion as to the application of § 1266.11, FHFA is amending this provision to clarify that it only applies to a Bank that has not converted to the GLB Act capital structure.

New Business Activities Regulation—Part 1272

As proposed, FHFA is transferring the new business activities rule from part 980 of the FHFB regulations to part 1272 of FHFA regulations, making only technical and conforming changes to the rule. *See* 75 FR at 7993–94.

Housing Associates and Letter of Credit Regulation—Parts 1264 and 1269

FHFA is also making conforming changes to part 1264 and part 1269 to change any cross references to former part 950 to correspond to the correct, newly designated sections in part 1266.

III. Paperwork Reduction Act

The information collection contained in the current Bank housing associates and advances regulations, entitled "Advances to Housing Associates," has been assigned control number 2590–0001 by the Office of Management and Budget (OMB). The amendments to those regulations made by this final rule do not substantively or materially modify the approved information collection. Further, the changes to the new business activity regulation do not contain any collections of information pursuant to the Paperwork Reduction Act of 1995 (44 U.S.C. 3501 *et seq.*). Therefore, FHFA has not submitted any information to the OMB for review.

IV. Regulatory Flexibility Act

The final rule applies only to the Banks, which do not come within the meaning of small entities as defined in the Regulatory Flexibility Act (RFA). *See* 5 U.S.C. 601(6). Therefore in accordance with section 605(b) of the RFA, FHFA certifies that this final rule will not have significant economic impact on a substantial number of small entities.

List of Subjects in 12 CFR Parts 950, 980, 1264, 1266, 1269 and 1272

Community development, Credit, Federal home loan banks, Housing, Reporting and recordkeeping requirements.

■ For the reasons stated in the preamble, the Federal Housing Finance Agency is amending chapters IX and XII of title 12 of the Code of Federal Regulations as follows:

CHAPTER IX—FEDERAL HOUSING FINANCE BOARD

CHAPTER XII—FEDERAL HOUSING FINANCE AGENCY

PART 950—[REDESIGNATED AS PART 1266]

■ 1. Redesignate 12 CFR part 950 as 12 CFR part 1266.

PART 980—[REDESIGNATED AS PART 1272]

■ 2. Redesignate 12 CFR part 980 as 12 CFR part 1272.

PART 1264—FEDERAL HOME LOAN BANK HOUSING ASSOCIATES

■ 3. The authority citation for part 1264 continues to read as follows:

Authority: 12 U.S.C. 1430b, 4511, 4513, and 4526.

§ 1264.3 Housing associate eligibility requirements.

■ 4. Amend § 1264.3(b) by removing the reference to "§ 950.17(b)(2) of this title" and adding in its place "§ 1266.17(b)(2) of this chapter".

PART 1266—ADVANCES

■ 5. The authority citation for newly redesignated part 1266 is revised to read as follows:

Authority: 12 U.S.C. 1426, 1429, 1430, 1430b, 1431, 4511(b), 4513, 4526(a).

■ 6. Amend the newly redesignated part 1266 as indicated in the table below:

Amend:	By removing the reference to:	And adding in its place:
§ 1266.1, Definition of *CFI member*	§ 925.1, each place that it appears	§ 1263.1.
§ 1266.1, Definition of *State housing finance agency*	§ 926.1	§ 1264.1.
§ 1266.4(g)(2)(i)	§ 950.2(b)(2)	§ 1266.2(b)(2).
§ 1266.4(g)(2)(ii)	§ 950.2(a)	§ 1266.2(a).
§ 1266.5(b)(2)(ii)	§ 917.4 of this chapter	§ 917.4 of this title.
§ 1266.6(a)	§ 917.4 of this chapter	§ 917.4 of this title.
§ 1266.9(a)(1)	§ 950.2(c)	§ 1266.2(c).
§ 1266.10(a)	§ 917.4 of this chapter	§ 917.4 of this title.
§ 1266.16	§§ 950.14 and 950.17	§§ 1266.14 and 1266.17.
§ 1266.17(a)	part 925	part 1263.
§ 1266.17(b)(2)(i) introductory text	§ 926.3(b)	§ 1264.3(b).
§ 1266.17(b)(2)(i)(A)	§ 950.7(a)(1) or (2)	§ 1266.7(a)(1) or (2).
§ 1266.17(b)(2)(i)(B)	§ 950.7(a)(3)	§ 1266.7(a)(3).
§ 1266.17(b)(2)(i)(B)	§ 926.3(b)	§ 1264.3(b).
§ 1266.17(b)(2)(i)(C)	§ 950.7(a)(4)	§ 1266.7(a)(4).
§ 1266.17(c)(2)(i)	§ 950.3(b), each time it appears	§ 1266.3(b).
§ 1266.17(c)(2)(ii)	§ 950.5(b)(2)	§ 1266.5(b)(2).
§ 1266.17(e)(2)	part 926	part 1264.
§ 1266.17(e)(3)	part 926	part 1264.

■ 7. In newly redesignated part 1266, revise all references to "Finance Board" to read "FHFA" and revise all references to "the Act" to read "the Bank Act".

■ 8. In newly redesignated § 1266.1, add in correct alphabetical order definitions for "Advance", "Bank", "Bank Act", "Community development", "Community development loan", "FHFA", and "Targeted beneficiaries", and revise the definition of "Residential housing finance assets" to read as follows:

§ 1266.1 Definitions.

* * * * *

Advance means a loan from a Bank that is:

(1) Provided pursuant to a written agreement;

(2) Supported by a note or other written evidence of the borrower's obligation; and

(3) Fully secured by collateral in accordance with the Bank Act and this part.

* * * * *

Bank, written in title case, means a Federal Home Loan Bank established under section 12 of the Bank Act, as amended (12 U.S.C. 1432).

Bank Act means the Federal Home Loan Bank Act, as amended (12 U.S.C. 1421 through 1449).

* * * * *

Community development has the same meaning as under the definition set forth in the Community Reinvestment rule for the Federal Reserve System (12 CFR part 228), Federal Deposit Insurance Corporation (12 CFR part 345), the Office of Thrift Supervision (12 CFR part 563e) or the Office of the Comptroller of the Currency (12 CFR part 25), whichever is the CFI member's primary Federal regulator.

Community development loan means a loan, or a participation interest in such loan, that has as its primary purpose community development, but such loans shall not include:

(1) Any loan or instrument that qualifies as eligible security for an advance under § 1266.7(a) of this part;

(2) Any loan that qualifies as a small agri-business loan, small business loan or small farm loan, under definitions set forth in this section; or

(3) Consumer loans or credit extended to one or more individuals for household, family or other personal expenditures.

* * * * *

FHFA means the Federal Housing Finance Agency.

* * * * *

Residential housing finance assets means any of the following:

(1) Loans secured by residential real property;

(2) Mortgage-backed securities;

(3) Participations in loans secured by residential real property;

(4) Loans or investments providing financing for economic development projects for targeted beneficiaries;

(5) Loans secured by manufactured housing, regardless of whether such housing qualifies as residential real property;

(6) Any loans or investments which FHFA, in its discretion, otherwise determines to be residential housing finance assets; and

(7) For CFI members, and to the extent not already included in categories (1)

through (6), small business loans, small farm loans, small agri-business loans, or community development loans.

* * * * *

Targeted beneficiaries has the meaning set forth in § 952.1 of this title.

■ 9. Amend newly redesignated § 1266.2 by adding new paragraph (e) to read as follows:

§ 1266.2 Authorization and application for advances; obligation to repay advances.

* * * * *

(e) *Status of secured lending.* All secured transactions, regardless of the form of the transaction, for money borrowed from a Bank by a member of any Bank shall be considered an advance subject to the requirements of this part.

■ 10. Revise newly redesignated § 1266.3 to read as follows:

§ 1266.3 Purpose of long-term advances; Proxy test.

(a) A Bank shall make long-term advances only for the purpose of enabling any member to purchase or fund new or existing residential housing finance assets.

(b)(1) Prior to approving an application for a long-term advance, a Bank shall determine that the principal amount of all long-term advances currently held by the member does not exceed the total book value of residential housing finance assets held by such member. The Bank shall determine the total book value of such residential housing finance assets, using the most recent Thrift Financial Report, Report of Condition and Income, financial statement or other reliable documentation made available by the member.

(2) Applications for CICA advances are exempt from the requirements of paragraph (b)(1) of this section.

■ 11. Amend newly redesignated § 1266.7 by revising paragraph (b)(1) to read as follows:

§ 1266.7 Collateral.

* * * * *

(b) * * *

(1) *General.* Subject to the requirements set forth in part 1272 of this chapter, a Bank is authorized to accept from CFI members or their affiliates as security for advances small business loans, small farm loans, small agri-business loans, or community development loans, in each case fully secured by collateral other than real estate, or securities representing a whole interest in such secured loans, provided that:

(i) Such collateral has a readily ascertainable value, can be reliably discounted to account for liquidation and other risks, and can be liquidated in due course; and

(ii) The Bank can perfect a security interest in such collateral.

* * * * *

■ 12. Revise newly redesignated § 1266.11 to read as follows:

§ 1266.11 Capital stock requirements; redemption of excess stock.

(a) *Capital stock requirement for advances.* For a Bank that has not converted to the capital structure authorized by the Gramm-Leach-Bliley Act, the aggregate amount of outstanding advance made by the Bank to a member shall not exceed 20 times the amount paid in by such member for capital stock in the Bank.

(b) *Unilateral Redemption of excess stock.* A Bank that has not converted to the capital structure authorized by the Gramm-Leach-Bliley Act:

(1) May, after providing 15 calendar days advance written notice to a member, require the redemption of that amount of the member's Bank capital stock that exceeds the applicable capital stock requirements in paragraph (a) of this section, provided that the member continues to comply with the minimum stock purchase requirement set forth in § 1263.20(a) of this chapter; and

(2) May not impose on, or accept from, a member a fee in lieu of redeeming a member's excess stock.

PART 1269—STANDBY LETTERS OF CREDIT

■ 13. The authority citation for part 1269 continues to read as follows:

Authority: 12 U.S.C. 1429, 1430, 1430b, 1431, 4511, 4513 and 4526.

■ 14. Amend part 1269 as indicated in the table below:

Amend:	By removing the reference to:	And adding in its place:
§ 1269.1, Definition of *community lending*	§ 950.1 of this title	§ 1266.1 of this chapter.
§ 1269.1, Definition of *Residential housing finance*	§ 950.1	§ 1266.1.
§ 1269.1, Definition of *SHFA associate*	§ 1269.1	§ 1264.1.
§ 1269.2(c)	§ 950.7 of this title	§ 1266.7 of this chapter.
§ 1269.3(a) introductory text	§§ 950.17(b)(1)(i) or (ii) of this title	§ 1266.17(b)(1)(i) or (ii) of this chapter.
§ 1269.3(b)	§ 950.17(b)(2)(i)(A),(B) or (C) of this title	§ 1266.17(b)(2)(i)(A),(B) or (C) of this chapter.
§ 1269.4(a)(1)	§ 950.17(b)(2)(i)(B)	§ 1266.17(b)(2)(i)(B).
§ 1269.4(a)(1)	§ 950.17(d)	§ 1266.17(d).
§ 1269.4(c)	part 950	part 1266.
§ 1269.5(b)(1)	§ 960.3	§ 1269.3.
§ 1269.5(b)(2)	§§ 950.7(d), 950.7(e), 950.8, 950.9 and 950.10 of this title.	§§ 1266.7(d), 1266.7(e), 1266.8, 1266.9 and 1266.10 of this chapter.

PART 1272—NEW BUSINESS ACTIVITIES

■ 15. The authority citation for newly redesignated part 1272 is revised to read as follows:

Authority: 12 U.S.C. 1431(a), 1432(a), 4511(b), 4513, 4526(a).

■ 16. Amend the references in the newly redesignated part 1272 as indicated in the table below:

Amend:	By removing the reference to:	And adding in its place:
§ 1272.1, Definition of *new business activity*	§ 950.7(a)(4)	§ 1266.7(a)(4).
§ 1272.1, Definition of *new business activity*	§ 950.7(b)	§ 1266.7(b).

Amend:	By removing the reference to:	And adding in its place:
§ 1272.3 introductory text	§ 980.4(b)	§ 1272.4(b).
§ 1272.3(b) introductory text	§ 950.7	§ 1266.7.
§ 1272.3(b)(2)	§ 917.4 of this chapter	§ 917.4 of this title.
§ 1272.3(b)(3)	§ 950.10	§ 1266.10.
§ 1272.4(a)	§ 980.3	§ 1272.3.
§ 1272.4(a)	§ 980.5(a)(1) through (4)	§ 1272.5(a)(1) through (4).
§ 1272.4(b)	§ 950.7(a)(4)	§ 1266.7(a)(4).
§ 1272.4(b)	§ 980.3	§ 1272.3.
§ 1272.4(c)	§ 980.6	§ 1272.6.
§ 1272.5(a) introductory text	§ 980.3	§ 1272.3.
§ 1272.5(a)(4)	§ 980.7	§ 1272.7.
§ 1272.5(a)(5)	§ 980.7	§ 1272.7.
§ 1272.5(b)	§ 980.6	§ 1272.6.

■ 17. Amend newly redesignated part 1272 by revising all references to "Finance Board" to read "FHFA".

■ 18. Amend newly redesignated § 1272.1 by adding in correct alphabetical order definitions for "Bank," "Bank Act" and "FHFA" to read as follows:

§ 1272.1 Definitions.

* * * * *

Bank, written in title case, means a Federal Home Loan Bank established under section 12 of the Bank Act, as amended (12 U.S.C. 1432).

Bank Act means the Federal Home Loan Bank Act, as amended (12 U.S.C. 1421 through 1449).

FHFA means the Federal Housing Finance Agency.

* * * * *

■ 19. In newly redesignated § 1272.5, amend paragraphs (a)(5) and (b) by revising the words "Finance Board's" to read "FHFA's".

Dated: November 30, 2010.

Edward J. DeMarco,

Acting Director, Federal Housing Finance Agency.

[FR Doc. 2010–30519 Filed 12–8–10; 8:45 am]

BILLING CODE 8070–01–P

DEPARTMENT OF TRANSPORTATION

Federal Aviation Administration

14 CFR Part 39

[Docket No. FAA–2010–0614; Directorate Identifier 2010–NE–24–AD; Amendment 39–16538; AD 2010–25–05]

RIN 2120–AA64

Airworthiness Directives; Rolls-Royce Deutschland Ltd & Co KG Models BR700–710A1–10; BR700–710A2–20; and BR700–710C4–11 Turbofan Engines

AGENCY: Federal Aviation Administration (FAA), DOT.

ACTION: Final rule.

SUMMARY: We are adopting a new airworthiness directive (AD) for the products listed above. This AD results from mandatory continuing airworthiness information (MCAI) issued by an aviation authority of another country to identify and correct an unsafe condition on an aviation product. The MCAI describes the unsafe condition as:

Due to manufacturing problems of BR700–710 HP stage 1 and 2 turbine discs it was necessary to re-calculate the Declared Safe Cyclic Life (DSCL) for all BR700–710 HP turbine discs. The analysis concluded that it is required to reduce the approved life limits for the HP turbine disc part numbers that are listed in Table 1 and Table 2 of this AD (MCAI). Exceeding the revised approved life limits could potentially result in non-contained disc failure.

We are issuing this AD to prevent-failure of the high-pressure turbine (HPT) stage 1 and stage 2 discs, uncontained engine failure, and damage to the airplane.

DATES: This AD becomes effective January 13, 2011.

ADDRESSES: The Docket Operations office is located at Docket Management Facility, U.S. Department of Transportation, 1200 New Jersey Avenue, SE., West Building Ground Floor, Room W12–140, Washington, DC 20590–0001.

FOR FURTHER INFORMATION CONTACT: Mark Riley, Aerospace Engineer, Engine Certification Office, FAA, Engine & Propeller Directorate, 12 New England Executive Park, Burlington, MA 01803; *e-mail: mark.riley@faa.gov;* telephone (781) 238–7758; fax (781) 238–7199.

SUPPLEMENTARY INFORMATION:

Discussion

We issued a notice of proposed rulemaking (NPRM) to amend 14 CFR part 39 to include an AD that would apply to the specified products. That NPRM was published in the **Federal Register** on August 23, 2010 (75 FR 51693). That NPRM proposed to correct an unsafe condition for the specified products. The MCAI states that:

Due to manufacturing problems of BR700–710 HP stage 1 and 2 turbine discs it was necessary to re-calculate the Declared Safe Cyclic Life (DSCL) for all BR700–710 HP turbine discs. The analysis concluded that it is required to reduce the approved life limits for the HP turbine disc part numbers that are listed in Table 1 and Table 2 of this AD (MCAI). Exceeding the revised approved life limits could potentially result in non-contained disc failure.

Comments

We gave the public the opportunity to participate in developing this AD. We received no comments on the NPRM or on the determination of the cost to the public.

Conclusion

We reviewed the available data and determined that air safety and the public interest require adopting the AD as proposed.

Costs of Compliance

Based on the service information, we estimate that this AD will affect about 1,026 BR700–710 engines of U.S. registry. We also estimate that no additional labor cost will be incurred to replace the discs. The average labor rate is $85 per work-hour. Required parts will cost about $6,000 per disc. Based on these figures, we estimate the cost of the AD on U.S. operators to be $6,156,000. Our cost estimate is exclusive of possible warranty coverage.

Authority for This Rulemaking

Title 49 of the United States Code specifies the FAA's authority to issue rules on aviation safety. Subtitle I, section 106, describes the authority of the FAA Administrator. "Subtitle VII: Aviation Programs," describes in more detail the scope of the Agency's authority.

We are issuing this rulemaking under the authority described in "Subtitle VII,

Part A, Subpart III, Section 44701: General requirements." Under that section, Congress charges the FAA with promoting safe flight of civil aircraft in air commerce by prescribing regulations for practices, methods, and procedures the Administrator finds necessary for safety in air commerce. This regulation is within the scope of that authority because it addresses an unsafe condition that is likely to exist or develop on products identified in this rulemaking action.

Regulatory Findings

We determined that this AD will not have federalism implications under Executive Order 13132. This AD will not have a substantial direct effect on the States, on the relationship between the national government and the States, or on the distribution of power and responsibilities among the various levels of government.

For the reasons discussed above, I certify this AD:

1. Is not a "significant regulatory action" under Executive Order 12866;
2. Is not a "significant rule" under the DOT Regulatory Policies and Procedures (44 FR 11034, February 26, 1979); and
3. Will not have a significant economic impact, positive or negative, on a substantial number of small entities under the criteria of the Regulatory Flexibility Act.

We prepared a regulatory evaluation of the estimated costs to comply with this AD and placed it in the AD docket.

Examining the AD Docket

You may examine the AD docket on the Internet at *http://www.regulations.gov;* or in person at the Docket Operations office between 9 a.m. and 5 p.m., Monday through Friday, except Federal holidays. The AD docket contains this AD, the regulatory evaluation, any comments received, and other information. The street address for the Docket Operations office (phone (800) 647–5527) is provided in the **ADDRESSES** section. Comments will be available in the AD docket shortly after receipt.

List of Subjects in 14 CFR Part 39

Air transportation, Aircraft, Aviation safety, Safety.

Adoption of the Amendment

■ Accordingly, under the authority delegated to me by the Administrator, the FAA amends 14 CFR part 39 as follows:

PART 39—AIRWORTHINESS DIRECTIVES

■ 1. The authority citation for part 39 continues to read as follows:

Authority: 49 U.S.C. 106(g), 40113, 44701.

§ 39.13 [Amended]

■ 2. The FAA amends § 39.13 by adding the following new AD:

2010–25–05 Rolls-Royce Deutschland Ltd & Co KG (formerly Rolls-Royce Deutschland GmbH, formerly BMW Rolls-Royce GmbH): Amendment 39–16538. Docket No. FAA–2010–0614; Directorate Identifier 2010–NE–24–AD.

Effective Date

(a) This airworthiness directive (AD) becomes effective January 13, 2011.

Affected ADs

(b) None.

Applicability

(c) This AD applies to Rolls-Royce Deutschland Ltd & Co KG models BR700–710A1–10, BR700–710A2–20, and BR700–710C4–11 turbofan engines with any of the high-pressure turbine (HPT) stage 1 and stage 2 discs installed as listed by part number (P/N) in Table 1 and Table 2 of this AD. These engines are installed on, but not limited to, Gulfstream model G–V and GV–SP airplanes, and Bombardier model BD–700–1A10 and BD–700–1A11 airplanes.

TABLE 1—DECLARED SAFE CYCLIC LIFE OF AFFECTED HPT STAGE 1 DISCS

HPT stage 1 disc P/N	Engine model	Declared safe cyclic life (flight cycles)
BRR21215	BR700–710A1–10	6,075
BRR21215	BR700–710A2–20	5,950
BRR22005	BR700–710A1–10	6,200
BRR22005	BR700–710A2–20	6,200
BRR22006	BR700–710A1–10	6,200
BRR22006	BR700–710A2–20	6,200
BRR22007	BR700–710A1–10	6,200
BRR22007	BR700–710A2–20	6,200
BRR22358	BR700–710A1–10	6,200
BRR22358	BR700–710A2–20	6,200
BRR23864	BR700–710A1–10	6,200
BRR23864	BR700–710A2–20	6,200
BRR23884	BR700–710A1–10	6,200
BRR23884	BR700–710A2–20	6,200
BRR23885	BR700–710A1–10	6,200
BRR23885	BR700–710A2–20	6,200
BRR23952	BR700–710A1–10	6,200
BRR23952	BR700–710A2–20	6,200
BRR23952	BR700–710C4–11 (Service Bulletin (SB) No. SB–BR700–72–101466 not incorporated).	6,200
BRR23952	BR700–710C4–11 (SB No. SB–BR700–72–101466 incorporated)	3,800
BRR23953	BR700–710A1–10	6,200
BRR23953	BR700–710A2–20	6,200
BRR23953	BR700–710C4–11 (SB No. SB–BR700–72–101466 not incorporated)	6,200
BRR23953	BR700–710C4–11 (SB No. SB–BR700–72–101466 incorporated)	3,800
BRR23954	BR700–710A1–10	6,200
BRR23954	BR700–710A2–20	6,200

TABLE 2—DECLARED SAFE CYCLIC LIFE OF AFFECTED HPT STAGE 2 DISCS

HPT stage 2 disc P/N	Engine model	Declared safe cyclic life (flight cycles)
BRR18291	BR700–710A1–10	9,300
BRR21214	BR700–710A1–10	9,600
BRR21214	BR700–710A2–20	9,600
BRR22008	BR700–710A1–10	10,500
BRR22008	BR700–710A2–20	10,500
BRR22008	BR700–710C4–11 (SB No. SB–BR700–72–101466 not incorporated)	10,500
BRR22008	BR700–710C4–11 (SB No. SB–BR700–72–101466 incorporated)	3,700
BRR22009	BR700–710A1–10	10,500
BRR22009	BR700–710A2–20	10,500
BRR22009	BR700–710C4–11 (SB No. SB–BR700–72–101466 not incorporated)	10,500
BRR22009	BR700–710C4–11 (SB No. SB–BR700–72–101466 incorporated)	3,700
BRR22010	BR700–710A1–10	10,500
BRR22010	BR700–710A2–20	10,500
BRR22359	BR700–710A1–10	10,500
BRR22359	BR700–710A2–20	10,500

Reason

(d) This AD results from mandatory continuing airworthiness information (MCAI) issued by an aviation authority of another country to identify and correct an unsafe condition on an aviation product. The MCAI states:

Due to manufacturing problems of BR700–710 HP stage 1 and 2 turbine discs it was necessary to re-calculate the Declared Safe Cyclic Life (DSCL) for all BR700–710 HP turbine discs. The analysis concluded that it is required to reduce the approved life limits for the HP turbine disc part numbers that are listed in Table 1 and Table 2 of this AD (MCAI). Exceeding the revised approved life limits could potentially result in non-contained disc failure.

We are issuing this AD to prevent failure of the HPT stage 1 and stage 2 discs, uncontained engine failure, and damage to the airplane.

Actions and Compliance

(e) Unless already done, do the following actions.

(1) Within 30 days after the effective date of this AD, or upon accumulating the declared safe cyclic life indicated in Table 1 or Table 2 of this AD as applicable, whichever occurs later, initially replace the HPT stage 1 or HPT stage 2 discs with serviceable discs.

(2) Thereafter, upon accumulating the declared safe cyclic life indicated in Table 1 or Table 2 of this AD, as applicable, repetitively replace the HPT stage 1 or HPT stage 2 discs with serviceable discs.

FAA AD Differences

(f) None.

Alternative Methods of Compliance (AMOCs)

(g) The Manager, Engine Certification Office, FAA, has the authority to approve AMOCs for this AD, if requested using the procedures found in 14 CFR 39.19.

Related Information

(h) Refer to European Aviation Safety Agency AD 2010–0075, dated April 20, 2010, and AD 2010–0076, dated April 20, 2010, for related information.

(i) Refer to Rolls-Royce Deutschland Ltd & Co KG SB No. SB–BR700–72–A900492, dated February 12, 2010, and SB No. SB–BR700–72–A900497, dated February 12, 2010, for related information. Contact Rolls-Royce Deutschland Ltd & Co KG, Eschenweg 11, Dahlewitz, 15827 Blankenfelde-Mahlow, Germany, telephone: +49 (0) 33–7086–1883, fax: +49 (0) 33–7086–3276, for a copy of this service information.

(j) Contact Mark Riley, Aerospace Engineer, Engine Certification Office, FAA, Engine & Propeller Directorate, 12 New England Executive Park, Burlington, MA 01803; *e-mail: mark.riley@faa.gov;* telephone (781) 238–7758; fax (781) 238–7199, for more information about this AD.

Issued in Burlington, Massachusetts, on November 30, 2010.

Peter A. White,

Assistant Manager, Engine and Propeller Directorate, Aircraft Certification Service.

[FR Doc. 2010–30832 Filed 12–8–10; 8:45 am]

BILLING CODE 4910–13–P

DEPARTMENT OF TRANSPORTATION

Federal Aviation Administration

14 CFR Part 97

[Docket No. 30756; Amdt. No. 3402]

Standard Instrument Approach Procedures, and Takeoff Minimums and Obstacle Departure Procedures; Miscellaneous Amendments

AGENCY: Federal Aviation Administration (FAA), DOT.

ACTION: Final rule.

SUMMARY: This establishes, amends, suspends, or revokes Standard Instrument Approach Procedures (SIAPs) and associated Takeoff Minimums and Obstacle Departure Procedures for operations at certain airports. These regulatory actions are needed because of the adoption of new or revised criteria, or because of changes occurring in the National Airspace System, such as the commissioning of new navigational facilities, adding new obstacles, or changing air traffic requirements. These changes are designed to provide safe and efficient use of the navigable airspace and to promote safe flight operations under instrument flight rules at the affected airports.

DATES: This rule is effective December 9, 2010. The compliance date for each SIAP, associated Takeoff Minimums, and ODP is specified in the amendatory provisions.

The incorporation by reference of certain publications listed in the regulations is approved by the Director of the Federal Register as of December 9, 2010.

ADDRESSES: Availability of matters incorporated by reference in the amendment is as follows:

For Examination—

1. FAA Rules Docket, FAA Headquarters Building, 800 Independence Avenue, SW., Washington, DC 20591;

2. The FAA Regional Office of the region in which the affected airport is located;

3. The National Flight Procedures Office, 6500 South MacArthur Blvd., Oklahoma City, OK 73169; or

4. The National Archives and Records Administration (NARA). For information on the availability of this material at NARA, call 202–741–6030, or go to: *http://www.archives.gov/federal_register/code_of_federal_regulations/ibr_locations.html.*

Availability—All SIAPs and Takeoff Minimums and ODPs are available online free of charge. Visit *http://www.nfdc.faa.gov* to register. Additionally, individual SIAP and Takeoff Minimums and ODP copies may be obtained from:

1. FAA Public Inquiry Center (APA–200), FAA Headquarters Building, 800 Independence Avenue, SW., Washington, DC 20591; or

2. The FAA Regional Office of the region in which the affected airport is located.

FOR FURTHER INFORMATION CONTACT: Harry J. Hodges, Flight Procedure Standards Branch (AFS–420), Flight Technologies and Programs Divisions, Flight Standards Service, Federal Aviation Administration, Mike Monroney Aeronautical Center, 6500 South MacArthur Blvd., Oklahoma City, OK 73169 (Mail Address: P.O. Box 25082, Oklahoma City, OK 73125) Telephone: (405) 954–4164.

SUPPLEMENTARY INFORMATION: This rule amends title 14 of the Code of Federal Regulations, part 97 (14 CFR part 97), by establishing, amending, suspending, or revoking SIAPS, Takeoff Minimums and/or ODPS. The complete regulators description of each SIAP and its associated Takeoff Minimums or ODP for an identified airport is listed on FAA form documents which are incorporated by reference in this amendment under 5 U.S.C. 552(a), 1 CFR part 51, and 14 CFR 97.20. The applicable FAA Forms are FAA Forms 8260–3, 8260–4, 8260–5, 8260–15A, and 8260–15B when required by an entry on 8260–15A.

The large number of SIAPs, Takeoff Minimums and ODPs, in addition to their complex nature and the need for a special format make publication in the **Federal Register** expensive and impractical. Furthermore, airmen do not use the regulatory text of the SIAPs, Takeoff Minimums or ODPs, but instead refer to their depiction on charts printed by publishers of aeronautical materials. The advantages of incorporation by reference are realized and publication of the complete description of each SIAP, Takeoff Minimums and ODP listed on FAA forms is unnecessary. This amendment provides the affected CFR sections and specifies the types of SIAPs and the effective dates of the associated Takeoff Minimums and ODPs. This amendment also identifies the airport and its location, the procedure, and the amendment number.

The Rule

This amendment to 14 CFR part 97 is effective upon publication of each separate SIAP, Takeoff Minimums and ODP as contained in the transmittal. Some SIAP and Takeoff Minimums and textual ODP amendments may have been issued previously by the FAA in a Flight Data Center (FDC) Notice to Airmen (NOTAM) as an emergency action of immediate flight safety relating directly to published aeronautical charts. The circumstances which created the need for some SIAP and Takeoff Minimums and ODP amendments may require making them effective in less than 30 days. For the remaining SIAPS and Takeoff Minimums and ODPS, an effective date at least 30 days after publication is provided.

Further, the SIAPs and Takeoff Minimums and ODPS contained in this amendment are based on the criteria contained in the U.S. Standard for Terminal Instrument Procedures (TERPS). In developing these SIAPS and Takeoff Minimums and ODPs, the TERPS criteria were applied to the conditions existing or anticipated at the affected airports. Because of the close and immediate relationship between these SIAPs, Takeoff Minimums and ODPs, and safety in air commerce, I find that notice and public procedures before adopting these SIAPS, Takeoff Minimums and ODPs are impracticable and contrary to the public interest and, where applicable, that good cause exists for making some SIAPs effective in less than 30 days.

Conclusion

The FAA has determined that this regulation only involves an established body of technical regulations for which frequent and routine amendments are necessary to keep them operationally current. It, therefore—(1) is not a "significant regulatory action" under Executive Order 12866; (2) is not a "significant rule " under DOT Regulatory Policies and Procedures (44 FR 11034; February 26,1979); and (3) does not warrant preparation of a regulatory evaluation as the anticipated impact is so minimal. For the same reason, the FAA certifies that this amendment will not have a significant economic impact on a substantial number of small entities under the criteria of the Regulatory Flexibility Act.

List of Subjects in 14 CFR Part 97

Air Traffic Control, Airports, Incorporation by reference, and Navigation (Air).

Issued in Washington, DC, on November 26, 2010.

Ray Towles,

Deputy Director, Flight Standards Service.

Adoption of the Amendment

■ Accordingly, pursuant to the authority delegated to me, title 14, Code of Federal Regulations, part 97 (14 CFR part 97) is amended by establishing, amending, suspending, or revoking Standard Instrument Approach Procedures and/or Takeoff Minimums and/or Obstacle Departure Procedures effective at 0902 UTC on the dates specified, as follows:

PART 97—STANDARD INSTRUMENT APPROACH PROCEDURES

■ 1. The authority citation for part 97 continues to read as follows:

Authority: 49 U.S.C. 106(g), 40103, 40106, 40113, 40114, 40120, 44502, 44514, 44701, 44719, 44721–44722.

■ 2. Part 97 is amended to read as follows:

Effective 13 JAN 2011

Fairbanks, AK, Fairbanks Intl, ILS OR LOC RWY 20R, ILS RWY 20R (SA CAT II), ILS RWY 20R, Amdt 23
Koyukuk, AK, Koyukuk, DIBVY TWO, Graphic Obstacle DP
Platinum, AK, Platinum, Takeoff Minimums and Obstacle DP, Amdt 1
Tucson, AZ, Tucson Intl, RNAV (GPS) RWY 3, Amdt 1
Tucson, AZ, Tucson Intl, RNAV (GPS) RWY 29L, Amdt 1
Bakersfield, CA, Meadows Field, RNAV (GPS) RWY 30R, Amdt 1A
Hayward, CA, Hayward Executive, Takeoff Minimums and Obstacle DP, Amdt 1
Watsonville, CA, Watsonville Muni, Takeoff Minimums and Obstacle DP, Amdt 5
Watsonville, CA, Watsonville Muni, Watsonville ONE Graphic Obstacle DP
Sarasota/Bradenton, FL, Sarasota/Bradenton Intl, ILS OR LOC RWY 14, Amdt 6
Sarasota/Bradenton, FL, Sarasota/Bradenton Intl, ILS OR LOC RWY 32, Amdt 8
Sarasota/Bradenton, FL, Sarasota/Bradenton Intl, RNAV (GPS) RWY 4, Amdt 2
Sarasota/Bradenton, FL, Sarasota/Bradenton Intl, RNAV (GPS) RWY 14, Amdt 3

Sarasota/Bradenton, FL, Sarasota/Bradenton Intl, RNAV (GPS) RWY 22, Amdt 2
Sarasota/Bradenton, FL, Sarasota/Bradenton Intl, RNAV (GPS) RWY 32, Amdt 3
Sarasota/Bradenton, FL, Sarasota/Bradenton Intl, VOR RWY 14, Amdt 18
Sarasota/Bradenton, FL, Sarasota/Bradenton Intl, VOR RWY 32, Amdt 10
Greenfield, IA, Greenfield Muni, RNAV (GPS) RWY 7, Orig
Greenfield, IA, Greenfield Muni, RNAV (GPS) RWY 25, Orig
Winterset, IA, Winterset-Madison County, RNAV (GPS) RWY 14, Orig
Winterset, IA, Winterset-Madison County, RNAV (GPS) RWY 32, Orig
Winterset, IA, Winterset-Madison County, VOR/DME–A, Amdt 2
Chicago/Rockford, IL, Chicago/Rockford Intl, RNAV (GPS) RWY 1, Amdt 1
Chicago/Rockford, IL, Chicago/Rockford Intl, RNAV (GPS) RWY 19, Amdt 1
Chicago/Rockford, IL, Chicago/Rockford Intl, RNAV (GPS) Z RWY 19, Orig-A, CANCELLED
Fort Wayne, IN, Smith Field, GPS RWY 13, Orig-A, CANCELLED
Fort Wayne, IN, Smith Field, RNAV (GPS) RWY 5, Orig
Fort Wayne, IN, Smith Field, RNAV (GPS) RWY 13, Orig
Fort Wayne, IN, Smith Field, RNAV (GPS) RWY 23, Orig
Fort Wayne, IN, Smith Field, RNAV (GPS) RWY 31, Orig
Fort Wayne, IN, Smith Field, VOR RWY 13, Amdt 10
Clay Center, KS, Clay Center Muni, GPS RWY 17, Orig, CANCELLED
Clay Center, KS, Clay Center Muni, NDB RWY 35, Amdt 2
Clay Center, KS, Clay Center Muni, RNAV (GPS) RWY 17, Orig
Clay Center, KS, Clay Center Muni, RNAV (GPS) RWY 35, Orig
Clay Center, KS, Clay Center Muni, Takeoff Minimums and Obstacle DP, Amdt 1
Herington, KS, Herington Rgnl, NDB RWY 17, Amdt 2
Herington, KS, Herington Rgnl, NDB RWY 35, Amdt 2
Herington, KS, Herington Rgnl, RNAV (GPS) RWY 17, Orig
Herington, KS, Herington Rgnl, RNAV (GPS) RWY 35, Orig
Washington, KS, Washington County Memorial, NDB–A, Amdt 1
Washington, KS, Washington County Memorial, RNAV (GPS) RWY 17, Orig
Washington, KS, Washington County Memorial, RNAV (GPS) RWY 35, Orig
Washington, KS, Washington County Memorial, Takeoff Minimums and Obstacles DP, Orig
Northampton, MA, Northampton, Takeoff Minimums and Obstacle DP, Amdt 4
Baltimore, MD, Martin State, RNAV (GPS) RWY 33, Amdt 1
Ada/Twin Valley, MN, Norman County Ada/Twin Valley, Takeoff Minimums and Obstacle DP, Orig
Buffalo, MN, Buffalo Muni, Takeoff Minimums and Obstacle DP, Orig
Tracy, MN, Tracy Muni, Takeoff Minimums and Obstacle DP, Orig
St Louis, MO, Lambert-St. Louis Intl, RNAV (GPS) RWY 30R, Amdt 1B
Winston-Salem, NC, Smith Reynolds, RNAV (GPS) RWY 15, Amdt 1
Stanley ND, Stanley Muni, Takeoff Minimums and Obstacle DP, Orig
Broken Bow, NE, Broken Bow Muni, Takeoff Minimums and Obstacle DP, Amdt 3
Scribner, NE, Scribner State, Takeoff Minimums and Obstacle DP, Orig
Reno, NV, Reno/Tahoe Intl, VOR–D, Amdt 7
Akron, OH, Akron-Canton Rgnl, ILS OR LOC RWY 1, Amdt 38
Akron, OH, Akron-Canton Rgnl, ILS OR LOC RWY 5, Orig
Akron, OH, Akron-Canton Rgnl, ILS OR LOC RWY 19, Amdt 8
Akron, OH, Akron-Canton Rgnl, ILS OR LOC RWY 23, Amdt 11
Akron, OH, Akron-Canton Rgnl, RADAR–1, Amdt 24
Akron, OH, Akron-Canton Rgnl, VOR RWY 5, Amdt 3
Akron, OH, Akron-Canton Rgnl, VOR RWY 23, Amdt 10
Bowling Green, OH, Wood County, RNAV (GPS) RWY 10, Orig-B
Bowling Green, OH, Wood County, RNAV (GPS) RWY 36, Orig-A
Port Clinton, OH, Carl R Keller Field, VOR/DME–A, Amdt 9A
Hinton, OK, Hinton Muni, Takeoff Minimums and Obstacle DP, Orig
Somerset, PA, Somerset County, NDB RWY 25, Amdt 7
Wilkes-Barre/Scranton, PA, Wilkes-Barre/Scranton Intl, NDB–A, Amdt 17
York, PA, York, Takeoff Minimums and Obstacle DP, Amdt 1
Bamberg, SC, Bamberg County, RNAV (GPS) RWY 5, Orig
Bamberg, SC, Bamberg County, RNAV (GPS) RWY 23, Orig
Bamberg, SC, Bamberg County, Takeoff Minimums and Obstacle DP, Orig
Sumter, SC, Sumter, ILS OR LOC/DME RWY 23, Orig
Sumter, SC, Sumter, RNAV (GPS) Z RWY 23, Amdt 1
Rapid City, SD, Rapid City Rgnl, ILS OR LOC RWY 32, Amdt 19
Bristol/Johnson/Kingsport, TN, Tri-Cities Rgnl TN/VA, Takeoff Minimums and Obstacle DP, Amdt 7
Bristol/Johnson/Kingsport, TN, Tri-Cities Rgnl TN/VA, TRICITIES ONE Graphic Obstacle DP
Childress, TX, Childress Muni, GPS RWY 35, Orig-A, CANCELLED
Childress, TX, Childress Muni, RNAV (GPS) RWY 36, Orig
Childress, TX, Childress Muni, VOR RWY 36, Amdt 10A
Salt Lake City, UT, Salt Lake City Intl, ILS OR LOC RWY 16L, ILS RWY 16L (CAT II), ILS RWY 16L (CAT III), Amdt 3
Salt Lake City, UT, Salt Lake City Intl, ILS OR LOC RWY 16R, ILS RWY 16R (CAT II), ILS RWY 16R (CAT III), Amdt 3
Salt Lake City, UT, Salt Lake City Intl, ILS OR LOC RWY 17, ILS RWY 17 (CAT II), Amdt 13
Salt Lake City, UT, Salt Lake City Intl, ILS OR LOC RWY 34L, ILS RWY 34L (CAT II), ILS RWY 34L (CAT III), Amdt 2
Salt Lake City, UT, Salt Lake City Intl, ILS OR LOC RWY 34R, ILS RWY 34R (CAT II), ILS RWY 34R (CAT III), Amdt 3
Salt Lake City, UT, Salt Lake City Intl, ILS OR LOC/DME RWY 35, Amdt 3
Salt Lake City, UT, Salt Lake City Intl, RNAV (GPS) RWY 16L, Amdt 1
Salt Lake City, UT, Salt Lake City Intl, RNAV (GPS) RWY 16R, Amdt 1
Salt Lake City, UT, Salt Lake City Intl, RNAV (GPS) RWY 17, Amdt 1
Crewe, VA, Crewe Muni, RNAV (GPS) RWY 15, Orig
Crewe, VA, Crewe Muni, RNAV (GPS) RWY 33, Orig
Crewe, VA, Crewe Muni, Takeoff Minimums and Obstacle DP, Orig
Galax/Hillsville, VA, Twin County, NDB–A, Amdt 6, CANCELLED
Kenbridge, VA, Lunenburg County, RNAV (GPS) RWY 2, Orig
Kenbridge, VA, Lunenburg County, RNAV (GPS) RWY 20, Orig
Kenbridge, VA, Lunenburg County, Takeoff Minimums and Obstacle DP, Orig
Williamsburg, VA, Williamsburg-Jamestown, RNAV (GPS)-C, Orig
Williamsburg, VA, Williamsburg-Jamestown, VOR–B, Amdt 3

[FR Doc. 2010–30586 Filed 12–8–10; 8:45 am]
BILLING CODE 4910–13–P

DEPARTMENT OF TRANSPORTATION

14 CFR Part 97

[Docket No. 30757; Amdt. No. 3403]

Standard Instrument Approach Procedures, and Takeoff Minimums and Obstacle Departure Procedures; Miscellaneous Amendments

AGENCY: Federal Aviation Administration (FAA), DOT.

ACTION: Final rule.

SUMMARY: This rule establishes, amends, suspends, or revokes Standard Instrument Approach Procedures (SIAPs) and associated Takeoff Minimums and Obstacle Departure Procedures for operations at certain airports. These regulatory actions are needed because of the adoption of new or revised criteria, or because of changes occurring in the National Airspace System, such as the commissioning of new navigational facilities, adding new obstacles, or changing air traffic requirements. These changes are designed to provide safe and efficient use of the navigable airspace and to promote safe flight operations under instrument flight rules at the affected airports.

DATES: This rule is effective December 9, 2010. The compliance date for each SIAP, associated Takeoff Minimums, and ODP is specified in the amendatory provisions.

The incorporation by reference of certain publications listed in the regulations is approved by the Director

of the Federal Register as of December 9, 2010.

ADDRESSES: Availability of matter incorporated by reference in the amendment is as follows:

For Examination—

1. FAA Rules Docket, FAA Headquarters Building, 800 Independence Avenue, SW., Washington, DC 20591;

2. The FAA Regional Office of the region in which the affected airport is located;

3. The National Flight Procedures Office, 6500 South MacArthur Blvd., Oklahoma City, OK 73169; or

4. The National Archives and Records Administration (NARA). For information on the availability of this material at NARA, call 202–741–6030, or go to: *http://www.archives.gov/federal_register/code_of_federal_regulations/ibr_locations.html.*

Availability—All SIAPs are available online free of charge. Visit *nfdc.faa.gov* to register. Additionally, individual SIAP and Takeoff Minimums and ODP copies may be obtained from:

1. FAA Public Inquiry Center (APA–200), FAA Headquarters Building, 800 Independence Avenue, SW., Washington, DC 20591; or

2. The FAA Regional Office of the region in which the affected airport is located.

FOR FURTHER INFORMATION CONTACT: Harry J. Hodges, Flight Procedure Standards Branch (AFS–420) Flight Technologies and Programs Division, Flight Standards Service, Federal Aviation Administration, Mike Monroney Aeronautical Center, 6500 South MacArthur Blvd., Oklahoma City, OK 73169 (Mail Address: P.O. Box 25082 Oklahoma City, OK 73125) telephone: (405) 954–4164.

SUPPLEMENTARY INFORMATION: This rule amends title 14, Code of Federal Regulations, part 97 (14 CFR part 97) by amending the referenced SIAPs. The complete regulatory description of each SIAP is listed on the appropriate FAA Form 8260, as modified by the National Flight Data Center (FDC)/Permanent Notice to Airmen (P–NOTAM), and is incorporated by reference in the amendment under 5 U.S.C. 552(a), 1 CFR part 51, and § 97.20 of Title 14 of the Code of Federal Regulations.

The large number of SIAPs, their complex nature, and the need for a special format make their verbatim publication in the **Federal Register** expensive and impractical. Further, airmen do not use the regulatory text of the SIAPs, but refer to their graphic depiction on charts printed by publishers of aeronautical materials. Thus, the advantages of incorporation by reference are realized and publication of the complete description of each SIAP contained in FAA form documents is unnecessary. This amendment provides the affected CFR sections and specifies the types of SIAP and the corresponding effective dates. This amendment also identifies the airport and its location, the procedure and the amendment number.

The Rule

This amendment to 14 CFR part 97 is effective upon publication of each separate SIAP as amended in the transmittal. For safety and timeliness of change considerations, this amendment incorporates only specific changes contained for each SIAP as modified by FDC/P–NOTAMs.

The SIAPs, as modified by FDC P–NOTAM, and contained in this amendment are based on the criteria contained in the U.S. Standard for Terminal Instrument Procedures (TERPS). In developing these changes to SIAPs, the TERPS criteria were applied only to specific conditions existing at the affected airports. All SIAP amendments in this rule have been previously issued by the FAA in a FDC NOTAM as an emergency action of immediate flight safety relating directly to published aeronautical charts. The circumstances which created the need for all these SIAP amendments requires making them effective in less than 30 days.

Because of the close and immediate relationship between these SIAPs and safety in air commerce, I find that notice and public procedure before adopting these SIAPs are impracticable and contrary to the public interest and, where applicable, that good cause exists for making these SIAPs effective in less than 30 days.

Conclusion

The FAA has determined that this regulation only involves an established body of technical regulations for which frequent and routine amendments are necessary to keep them operationally current. It, therefore—(1) is not a "significant regulatory action" under Executive Order 12866; (2) is not a "significant rule" under DOT regulatory Policies and Procedures (44 FR 11034; February 26, 1979); and (3) does not warrant preparation of a regulatory evaluation as the anticipated impact is so minimal. For the same reason, the FAA certifies that this amendment will not have a significant economic impact on a substantial number of small entities under the criteria of the Regulatory Flexibility Act.

List of Subjects in 14 CFR Part 97

Air Traffic Control, Airports, Incorporation by reference, and Navigation (Air).

Issued in Washington, DC, on November 26, 2010.

Ray Towles,

Deputy Director, Flight Standards Service.

Adoption of the Amendment

■ Accordingly, pursuant to the authority delegated to me, title 14, Code of Federal regulations, part 97, 14 CFR part 97, is amended by amending Standard Instrument Approach Procedures, effective at 0901 UTC on the dates specified, as follows:

PART 97—STANDARD INSTRUMENT APPROACH PROCEDURES

■ 1. The authority citation for part 97 continues to read as follows:

Authority: 49 U.S.C. 106(g), 40103, 40106, 40113, 40114, 40120, 44502, 44514, 44701, 44719, 44721–44722.

■ 2. Part 97 is amended to read as follows:

§§ 97.23, 97.25, 97.27, 97.29, 97.31, 97.33, and 97.35 [Amended]

By amending: § 97.23 VOR, VOR/DME, VOR or TACAN, and VOR/DME or TACAN; § 97.25 LOC, LOC/DME, LDA, LDA/DME, SDF, SDF/DME; § 97.27 NDB, NDB/DME; § 97.29 ILS, ILS/DME, MLS, MLS/DME, MLS/RNAV; § 97.31 RADAR SIAPs; § 97.33 RNAV SIAPs; and § 97.35 COPTER SIAPs, Identified as follows:

** * * Effective Upon Publication*

Airac date	State	City	Airport	FDC No.	FDC date	Subject
13–Jan–11	FL	Apalachicola	Apalachicola Regional	0/1222	11/22/10	NDB RWY 13, Amdt 1.
13–Jan–11	VA	Wakefield	Wakefield Muni	0/4184	11/22/10	RNAV (GPS) RWY 20, Orig.
13–Jan–11	IN	Alexandria	Alexandria	0/4211	11/15/10	VOR OR GPS RWY 27, Amdt 8.
13–Jan–11	TX	Pampa	Perry Lefors Field	0/4249	10/29/10	GPS RWY 17, Orig-A.
13–Jan–11	NY	White Plains	Westchester County	0/5983	11/12/10	RNAV (GPS) Y RWY 34, Amdt 3.

Airac date	State	City	Airport	FDC No.	FDC date	Subject
13–Jan–11 ...	NY	White Plains	Westchester County	0/5984	11/12/10	ILS OR LOC RWY 34, Amdt 4.
13–Jan–11 ...	NY	White Plains	Westchester County	0/5985	11/12/10	NDB RWY 16, Amdt 21B.
13–Jan–11 ...	NY	White Plains	Westchester County	0/5986	11/12/10	RNAV (GPS) Y RWY 16, Amdt 1.
13–Jan–11 ...	RQ	Aguadilla	Rafael Hernandez	0/6015	11/15/10	RNAV (GPS) RWY 8, Orig-A.
13–Jan–11 ...	RQ	Aguadilla	Rafael Hernandez	0/6017	11/15/10	VOR/DME RWY 8, Amdt 2A.
13–Jan–11 ...	RQ	Aguadilla	Rafael Hernandez	0/6018	11/15/10	VOR RWY 8, Amdt 6A.
13–Jan–11 ...	WI	Mineral Point	Iowa County	0/6108	11/9/10	NDB RWY 22, Amdt 5.
13–Jan–11 ...	NM	Deming	Deming Muni	0/6402	11/12/10	Takeoff Minimums and Obstacle DP, Amdt 2.
13–Jan–11 ...	NV	Las Vegas	North Las Vegas	0/6416	11/12/10	ILS OR LOC RWY 12L, Orig-B.
13–Jan–11 ...	NV	Elko	Elko Rgnl	0/6417	11/12/10	Takeoff Minimums and Obstacle DP, Amdt 5.
13–Jan–11 ...	AR	Fort Smith	Fort Smith Rgnl	0/6816	11/15/10	NDB RWY 25, Amdt 24D.
13–Jan–11 ...	AL	Huntsville	Huntsville Intl-Carl T Jones Field.	0/6879	11/15/10	Takeoff Minimums and Obstacle DP, Amdt 1.
13–Jan–11 ...	NY	Kingston	Kingston-Ulser	0/6886	11/15/10	VOR OR GPS A, Amdt 1.
13–Jan–11 ...	NY	Syracuse	Syracuse Hancock Intl	0/6891	11/17/10	ILS RWY 28, ILS RWY 28 (CAT II), Amdt 33B.
13–Jan–11 ...	TX	San Antonio	San Antonio Intl	0/6950	11/12/10	ILS OR LOC RWY 12R, Amdt 14.
13–Jan–11 ...	MO	Kansas City	Kansas City Intl	0/6951	11/15/10	ILS OR LOC RWY 1R, ILS RWY 1R (CAT II), ILS RWY 1R (CAT III), Amdt 3.
13–Jan–11 ...	MO	Kansas City	Kansas City Intl	0/6952	11/15/10	ILS OR LOC RWY 19R, ILS RWY 19R (CAT II), ILS RWY 19R (CAT III), Amdt 10.
13–Jan–11 ...	TX	San Antonio	San Antonio Intl	0/6979	11/12/10	ILS OR LOC RWY 30L, Amdt 10.
13–Jan–11 ...	NY	Syracuse	Syracuse Hancock Intl	0/7120	11/17/10	ILS OR LOC RWY 10, Amdt 12.
13–Jan–11 ...	PA	Zelienople	Zelienople Muni	0/7603	11/17/10	RNAV (GPS) RWY 35, Orig-A.
13–Jan–11 ...	MI	Ann Arbor	Ann Arbor Muni	0/7695	11/22/10	VOR RWY 6, Amdt 13A.
13–Jan–11 ...	MI	Ann Arbor	Ann Arbor Muni	0/7696	11/22/10	VOR RWY 24, Amdt 13A.
13–Jan–11 ...	UT	Fillmore	Fillmore Muni	0/8092	11/22/10	RNAV (GPS) RWY 4, Orig.
13–Jan–11 ...	UT	Fillmore	Fillmore Muni	0/8094	11/22/10	RNAV (GPS) RWY 22, Orig.

[FR Doc. 2010–30591 Filed 12–8–10; 8:45 am]

BILLING CODE 4910–13–P

DEPARTMENT OF COMMERCE

Bureau of Economic Analysis

15 CFR Part 806

[Docket No. 100202061–0573–02]

RIN 0691—AA75

Direct Investment Surveys: BE–577, Quarterly Survey of U.S. Direct Investment Abroad—Direct Transactions of U.S. Reporter With Foreign Affiliate

AGENCY: Bureau of Economic Analysis, Commerce.

ACTION: Final Rule.

SUMMARY: This final rule amends regulations of the Bureau of Economic Analysis (BEA), Department of Commerce, to set forth the reporting requirements for BE–577 quarterly survey of U.S. direct investment abroad. BEA conducts the survey quarterly and obtains sample data on transactions and positions between U.S.-owned foreign business enterprises and their U.S. parents.

Through this rule, BEA will modify items on the survey form and the reporting criteria. Changes will bring the BE–577 forms and related instructions into conformity with the 2009 BE–10, Benchmark Survey of U.S. Direct Investment Abroad, and will raise the threshold for reporting.

DATES: The final rule will be effective January 10, 2011.

FOR FURTHER INFORMATION CONTACT: David H. Galler, Chief, Direct Investment Division, BE–50, Bureau of Economic Analysis, U.S. Department of Commerce, Washington, DC 20230; phone (202) 606–9835 or e-mail *David.Galler@bea.gov.*

SUPPLEMENTARY INFORMATION: On September 1, 2010, BEA published a notice of proposed rulemaking that set forth revised reporting criteria for the BE–577, Quarterly Survey of U.S. Direct Investment Abroad—Direct Transactions of U.S. Reporter With Foreign Affiliate, (75 FR 53611–53612). No comments on the proposed rule were received. Thus, the proposed rule is adopted without change. This final rule amends 15 CFR part 806.14 to set forth the reporting requirements for the BE–577 quarterly survey of U.S. direct investment abroad.

The BE–577 survey is a mandatory quarterly survey of U.S. direct investment abroad conducted by BEA under the International Investment and Trade in Services Survey Act, 22 U.S.C. 3101–3108 (the Act). BEA will send BE–577 survey forms to potential respondents each quarter; responses will be due within 30 days after the end of each quarter, except for the final quarter of the fiscal year when reports will be due within 45 days of the end of the quarter.

Description of Changes

BEA is making a number of changes to the BE–577 survey. BEA is increasing the exemption level for reporting on Form BE–577 to $60 million and will discontinue collecting information on transactions classified as permanent debt and related interest payments between U.S. parent companies that are banks, bank holding companies, or financial holding companies and their bank foreign affiliates. Recent changes in international standards call for the bank permanent debt previously classified as direct investment to be classified as other investment, for which statistics are collected by the Treasury Department through the Treasury International Capital System. BEA is

changing the title of Form BE–577 to "Quarterly Survey of U.S. Direct Investment Abroad—Direct Transactions of U.S. Reporter With Foreign Affiliate."

The exemption level was last changed in 2006 following the 2004 Benchmark Survey of U.S. Direct Investment Abroad. The exemption level is stated in terms of the foreign affiliate's assets, sales, and net income. U.S. parent companies must report data for their foreign affiliates if the affiliates have total assets, sales or gross operating revenues, or net income greater than $60 million (positive or negative). BEA expects about 14,500 survey forms to be reported each quarter, compared to 17,500 under the previous threshold for filing. About 3,000 affiliates—accounting for less than 1.5 percent of the statistics for income and direct investment position—will drop out of the sample and will be estimated based on reports received on the benchmark survey.

Survey Background

BEA, U.S. Department of Commerce, conducts the BE–577 survey under the authority of the International Investment and Trade in Services Survey Act (22 U.S.C. 3101–3108), hereinafter, "the Act." Section 4(a) of the Act (22. U.S.C. 3103(a)) provides that, with respect to United States direct investment abroad, the President shall, to the extent he deems necessary and feasible, conduct a regular data collection program to secure current information on international capital flows and other information related to international investment and trade in services including (but not limited to) such information that may be necessary for computing and analyzing the United States balance of payments, the employment and taxes of United States parents and affiliates, and the international investment and trade in services position of the United States.

Executive Order 12866

This final rule has been determined to be not significant for purposes of E.O. 12866.

Executive Order 13132

This final rule does not contain policies with Federalism implications as that term is defined in E.O. 13132.

Paperwork Reduction Act

This collection-of-information in this final rule has been submitted to the Office of Management and Budget (OMB) under the Paperwork Reduction Act (PRA). OMB approved the information collection under control number 0608–0004.

Notwithstanding any other provisions of the law, no person is required to respond to, nor shall any person be subject to a penalty for failure to comply with, a collection-of-information subject to the requirements of the PRA unless that collection displays a currently valid OMB control number.

The BE–577 survey is expected to result in the filing of about 14,500 foreign affiliate reports by an estimated 1,750 U.S. parent companies. A parent company must file one form per affiliate. The respondent burden for this collection of information is estimated to vary from one-half hour to three hours per response, with an average of one hour per response, including time for reviewing instructions, searching existing data sources, gathering and maintaining the data needed, and completing and reviewing the collection of information. Because reports are filed 4 times per year, 58,000 responses annually are expected. Thus, the total annual respondent burden of the survey is estimated at 58,000 hours (14,500 respondents filing 4 times per year multiplied by 1 hour average burden). The survey's estimated respondent burden of 58,000 hours compares with a total respondent burden of 62,000 hours in the current OMB inventory of burden hours for this collection of information. The reduction in burden is a result of raising the threshold for filing.

Written comments regarding the burden-hour estimates or any other aspect of the collection-of-information requirements contained in the final rule should be sent both to the Bureau of Economic Analysis via mail to U.S. Department of Commerce, Bureau of Economic Analysis, Office of the Chief, Direct Investment Division, BE–50, Washington, DC 20230; via e-mail at *David.Galler@bea.gov;* or by FAX at (202) 606–5311, and to the Office of Management and Budget, O.I.R.A., Paperwork Reduction Project 0608–0004, Attention PRA Desk Officer for BEA, via e-mail at *pbugg@omb.eop.gov,* or by FAX at (202) 395–7245.

Regulatory Flexibility Act

The Chief Counsel for Regulation, Department of Commerce, has certified to the Chief Counsel for Advocacy, Small Business Administration (SBA), under the provisions of the Regulatory Flexibility Act (5 U.S.C. 605(b)), that this final rule will not have a significant economic impact on a substantial number of small entities. The factual basis for the certification was published in the proposed rule and is not repeated here. No comments were received regarding the certification or the economic impact of the rule more generally. No final regulatory flexibility analysis was prepared.

List of Subjects in 15 CFR Part 806

Economic statistics, International transactions, Penalties, Reporting and recordkeeping requirements, U.S. investment abroad.

Dated: November 18, 2010.

Brian C. Moyer,

Acting Director, Bureau of Economic Analysis.

■ For the reasons set forth in the preamble, BEA amends 15 CFR Part 806 as follows:

PART 806—DIRECT INVESTMENT SURVEYS

■ 1. The authority citation for 15 CFR Part 806 continues to read as follows:

Authority: 5 U.S.C. 301; 22 U.S.C. 3101–3108; E.O. 11961 (3 CFR, 1977 Comp., p. 86), as amended by E.O. 12318 (3 CFR, 1981 Comp., p. 173); E.O. 12518 (3 CFR, 1985 Comp., p. 348).

■ 2. Section 806.14(e) is revised to read as follows:

§ 806.14 U.S. direct investment abroad.

* * * * *

(e) *Quarterly report form.* BE–577, Quarterly Survey of U.S. Direct Investment Abroad—Direct Transactions of U.S. Reporter With Foreign Affiliate: One report is required for each foreign affiliate exceeding an exemption level of $60 million except that a report need not be filed by a U.S. Reporter to report direct transactions with one of its foreign affiliates in which it does not hold a direct equity interest unless an intercompany balance for the quarter exceeds $1 million.

* * * * *

[FR Doc. 2010–30970 Filed 12–8–10; 8:45 am]

BILLING CODE 3510–06–P

DEPARTMENT OF THE INTERIOR

Bureau of Ocean Energy Management, Regulation and Enforcement

30 CFR Part 250

[Docket ID BOEM–2010–0034]

RIN 1010–AD68

Oil and Gas and Sulphur Operations in the Outer Continental Shelf—Increased Safety Measures for Energy Development on the Outer Continental Shelf; Correction

AGENCY: Bureau of Ocean Energy Management, Regulation and Enforcement (BOEMRE), Interior.

ACTION: Interim final rule; correction.

SUMMARY: BOEMRE published an interim final rule implementing certain safety measures recommended for improving the safety of oil and gas exploration and development on the Outer Continental Shelf. This document contains a correction to the final regulations published on October 14, 2010, which inadvertently deleted one sentence from the existing regulations. The correction being made is non-substantive and is necessary for clarification purposes only.

DATES: *Effective Date:* This correction is effective December 9, 2010.

FOR FURTHER INFORMATION CONTACT: Amy C. White, (703) 787–1665.

SUPPLEMENTARY INFORMATION:

Background

BOEMRE published an interim final rule in the **Federal Register** on October 14, 2010 (75 FR 63346), titled "Increased Safety Measures for Energy Development on the Outer Continental Shelf."

On page 63372 of the **Federal Register** publication of the interim final rule, the first sentence in § 250.415(d) was inadvertently deleted.

List of Subjects in 30 CFR Part 250

Administrative practice and procedure, Continental shelf, Incorporation by reference, Oil and gas exploration, Public lands—mineral resources, Reporting and recordkeeping requirements.

Dated: November 30, 2010.

Ned Farquhar,

Deputy Assistant Secretary—Land and Minerals Management.

■ Accordingly, Bureau of Ocean Energy Management, Regulation and Enforcement is making the correcting amendment to 30 CFR Part 250 as follows:

PART 250—OIL AND GAS AND SULPHUR OPERATIONS IN THE OUTER CONTINENTAL SHELF

■ 1. The authority citation for part 250 continues to read as follows:

Authority: 31 U.S.C. 9701, 43 U.S.C. 1334.

■ 2. In § 250.415, revise paragraph (d) to read as follows:

§ 250.415 What must my casing and cementing programs include?

* * * * *

(d) In areas containing permafrost, setting depths for conductor and surface casing based on the anticipated depth of the permafrost. Your program must provide protection from thaw subsidence and freezeback effect, proper anchorage, and well control;

* * * * *

[FR Doc. 2010–30990 Filed 12–8–10; 8:45 am]

BILLING CODE 4310–MR–P

DEPARTMENT OF HOMELAND SECURITY

Coast Guard

33 CFR Part 117

[Docket No. USCG–2010–1080]

Drawbridge Operation Regulation; Upper Mississippi River, Hannibal, MO

AGENCY: Coast Guard, DHS.

ACTION: Notice of temporary deviation from regulations.

SUMMARY: The Commander, Eighth Coast Guard District, has issued a temporary deviation from the regulation governing the operation of the Hannibal Railroad Drawbridge across the Upper Mississippi River, mile 309.9, at Hannibal, Missouri. The deviation is necessary to allow the bridge owner time to replace critical control components that are essential to the continued safe operation of the drawbridge. The work is scheduled in the winter, when the impact on navigation is minimal, instead of scheduling the work at other times in the year, when river traffic is prevalent. This deviation allows the bridge to remain in the closed-to-navigation position during work performance.

DATES: This deviation is effective from 12:01 a.m., January 5, 2011 to 12:01 a.m., January 26, 2011.

ADDRESSES: Documents mentioned in this preamble as being available in the docket are part of docket USCG–2010–1080 and are available online by going to *http://www.regulations.gov,* inserting USCG–2010–1080 in the "Keyword" box and then clicking "Search". They are also available for inspection or copying at the Docket Management Facility (M–30), U.S. Department of Transportation, West Building Ground Floor, Room W12–140, 1200 New Jersey Avenue, SE., Washington, DC 20590, between 9 a.m. and 5 p.m., Monday through Friday, except Federal holidays.

FOR FURTHER INFORMATION CONTACT: If you have questions on this rule, call or e-mail Eric A. Washburn, Bridge Administrator, Western Rivers, Coast Guard; telephone 314–269–2378, e-mail *Eric.Washburn@uscg.mil.* If you have questions on viewing the docket, call Renee V. Wright, Program Manager, Docket Operations, telephone 202–366–9826.

SUPPLEMENTARY INFORMATION: The Norfolk Southern Railroad requested a temporary deviation for the Hannibal Railroad Drawbridge, across the Upper Mississippi River, mile 309.9, at Hannibal, Missouri to remain in the closed-to-navigation position for 21 days from 12:01 a.m., January 5, 2011 to 12:01 a.m., January 26, 2011 to allow the bridge owner time for preventive maintenance. The Hannibal Railroad Drawbridge currently operates in accordance with 33 CFR 117.5, which states the general requirement that drawbridges shall open promptly and fully for the passage of vessels when a request to open is given in accordance with the subpart.

There are no alternate routes for vessels transiting this section of the Upper Mississippi River.

Winter conditions on the Upper Mississippi River coupled with the closure of Army Corps of Engineer's Lock No. 20 (Mile 343.2 UMR), Lock No. 21 (Mile 324.9 UMR) and Lock No. 22 (Mile 301.2 UMR) from January 3, 2011 to March 4, 2011 will preclude any significant navigation demands for the drawspan opening.

The Hannibal Railroad Drawbridge, in the closed-to-navigation position, provides a vertical clearance of 21.1 feet above normal pool. Navigation on the waterway consists primarily of commercial tows and recreational watercraft. The drawbridge will remain in the closed-to-navigation position for the 21-day period, January 5, 2011 to January 25, 2011. This temporary deviation has been coordinated with waterway users.

In accordance with 33 CFR 117.35(e), the drawbridge must return to its regular operating schedule immediately at the end of the designated time period. This deviation from the operating regulations is authorized under 33 CFR 117.35.

Dated: November 30, 2010.

Eric A. Washburn,

Bridge Administrator.

[FR Doc. 2010–30928 Filed 12–8–10; 8:45 am]

BILLING CODE 9110–04–P

ENVIRONMENTAL PROTECTION AGENCY

40 CFR Part 271

[EPA–R10–RCRA–2010–0947; FRL–9236–8]

Oregon; Correction of Federal Authorization of the State's Hazardous Waste Management Program

AGENCY: Environmental Protection Agency (EPA).

ACTION: Direct final rule.

SUMMARY: On January 7, 2010, EPA published a final rule under docket EPA–R10–RCRA 2009–0766 granting final authorization for changes the State of Oregon made to its federally authorized RCRA Hazardous Waste Management Program. These authorized changes included, among others, the federal Recycled Used Oil Management Standards; Clarification rule, promulgated on July 30, 2003. During a post-authorization review of the State of Oregon's regulations, EPA identified that the Oregon Administrative Rules (OAR), related to the federal used oil management requirements (OAR 340–100–0002), had not been updated to include the adoption of the federal Recycled Used Oil Management Standards; Clarification rule. Therefore, the State did not have an effective state rule and EPA inaccurately referenced this rule in the State's Final Authorization Action published and effective on January 7, 2010. This action will correct the State of Oregon's federally authorized program, by removing the inaccurate authorization reference to the Federal Recycled Used Oil Management Standards; Clarification rule.

DATES: This rule is effective February 7, 2011, unless the EPA receives adverse comment on this revision by the close of business January 10, 2011. If the EPA receives such comments, EPA will publish a timely withdrawal of this direct final rule in the Federal Register informing the public that the rule will not take effect.

ADDRESSES: Submit your comments, identified by Docket ID No. EPA–R10–RCRA–2010–0947, by one of the following methods:

- *http://www.regulation.gov:* Follow the on-line instructions for submitting comments.
- *E-mail: Kocourek.Nina@epa.gov.*
- *Mail:* Nina Kocourek, U.S. Environmental Protection Agency, Region 10, Office of Air, Waste & Toxics, Mail Stop AWT–122, 1200 Sixth Avenue, Suite 900, Seattle, WA 98101.

Instructions: Direct your comments to Docket ID No. EPA–R10–RCRA–2010–0947. EPA's policy is that all comments received will be included in the public docket without change and may be made available online at *http://www.regulations.gov,* including any personal information provided, unless the comment includes information claimed to be Confidential Business Information (CBI) or other information whose disclosure is restricted by statute. Do not submit information that you consider to be CBI or otherwise protected through *http://www.regulations.gov,* or e-mail. The *http://www.regulations.gov* Web site is an "anonymous access" system, which means EPA will not know your identity or contact information unless you provide it in the body of your comment. If you send an e-mail comment directly to EPA without going through *http://www.regulations.gov,* your e-mail address will be automatically captured and included as part of the comment that is placed in the public docket and made available on the Internet. If you submit an electronic comment, EPA recommends that you include your name and other contact information in the body of your comment and with any disk or CD–ROM you submit. If EPA cannot read your comment due to technical difficulties and cannot contact you for clarification, EPA may not be able to consider your comment. Electronic files should avoid the use of special characters or any form of encryption, and be free of any defects or viruses. For additional information about EPA's public docket, visit the EPA Docket Center homepage at *http://www.epa.gov/epahome/dockets.htm.*

Docket: All documents in the docket are listed in the *http://www.regulations.gov* index. Although listed in the index, some information is not publicly available, *e.g.,* CBI or other information whose disclosure is restricted by statute. Certain other material, such as copyrighted material, will be publicly available only in hard copy. Publicly available docket materials are available either electronically in *http://www.regulations.gov* or in hard copy during normal business hours at the U.S. Environmental Protection Agency, Region 10, Office of Air, Waste & Toxics, Mailstop AWT–122, 1200 Sixth Avenue, Suite 900, Seattle, Washington 98101, contact: Nina Kocourek, phone number: (206) 553–6502; or the Oregon Department of Environmental Quality, 811 SW. Sixth Avenue, Portland, Oregon, 97204, contact: Scott Latham, phone number: (503) 229–5953.

FOR FURTHER INFORMATION CONTACT: Nina Kocourek, U.S. Environmental Protection Agency, Region 10, Office of Air, Waste & Toxics (AWT–122), 1200 Sixth Avenue, Suite 900, Seattle, Washington 98101, *phone number:* (206) 553–6502, *e-mail: kocourek.nina@epa.gov.*

SUPPLEMENTARY INFORMATION:

A. Why are revisions to state programs necessary?

States which have received final authorization from EPA under RCRA section 3006(b), 42 U.S.C. 6926(b), must maintain a hazardous waste program that is equivalent to, consistent with, and no less stringent than the Federal program. As the Federal program changes, States must change their programs and ask EPA to authorize the changes. Changes to State programs may be necessary when Federal or State statutory or regulatory authority is modified or when certain other changes occur. Most commonly, States must change their programs because of changes to EPA's regulations codified in Title 40 of the Code of Federal Regulations (CFR) Parts 124, 260 through 268, 270, 273, and 279.

B. What decisions have we made in this rule?

This action will correct the State of Oregon's federally authorized program by removing the inaccurate authorization reference to the Federal Recycled Used Oil Management Standards; Clarification rule promulgated on July 30, 2003 (68 FR 44659) pursuant to the Final Authorization Rule promulgated and effective on January 7, 2010 (75 FR 918) under docket EPA–R10–RCRA–2009–0766. During a post-authorization review of the State of Oregon's regulations, EPA identified that the Oregon Administrative Rules (OAR), related to the federal used oil management requirements (OAR 340–100–0002), had not been updated to include the adoption of the Federal Recycled Used Oil Management Standards; Clarification rule. Therefore, the State did not have an effective state rule and EPA inaccurately referenced this rule in the State's Final Authorization Action published and effective on January 7, 2010.

The Federal Recycled Used Oil Management Standards; Clarification rule addresses three aspects of the used

oil management standards: (1) It clarifies when used oil contaminated with PCBs is regulated under RCRA used oil management standards and when it is not; (2) It explains that used oil mixed with Conditionally Exempt Small Quality Generators (CESQG) waste is subject to RCRA used oil management standards irrespective of how this mixture is to be recycled; (3) It explains that the initial marketer of on-specification used oil must keep a record of the shipment of used oil to the facility to which the initial marketer delivers the used oil. The Federal Used Oil Management Standards; Clarification rule (68 FR 44659, July 30, 2003) is promulgated pursuant to non-HSWA authority and is no more stringent than the current Federal requirements. This federal rule is considered to be an optional rule which States are not required to adopt and seek authorization for this rule, although the State of Oregon intends to revise its OAR to adopt the Federal Recycled Used Oil Management Standards; Clarification rule (68 FR 44665) at a later date.

With this correction to Oregon's federally authorized RCRA Hazardous Waste Management Program, the State will continue to have responsibility for permitting Treatment, Storage, and Disposal Facilities (TSDFs) within its borders, except in Indian country (18 U.S.C. 1151), and for carrying out the aspects of the RCRA program, subject to the limitations of the Hazardous and Solid Waste Amendments of 1984 (HSWA). New Federal requirements and prohibitions imposed by Federal regulations that EPA promulgates under the authority of HSWA, and which are not less stringent than existing requirements, take effect in authorized States before the States are authorized for the requirements. Thus, EPA will implement those requirements and prohibitions in Oregon, including issuing permits, until the State is granted authorization to do so.

C. What is the effect of this authorization decision?

This action will correct the State of Oregon's federally authorized program by removing the inaccurate authorization reference to the Federal Recycled Used Oil Management Standards; Clarification rule promulgated on July 30, 2003 (68 FR 44659), from the State of Oregon's Federally Authorized Program Authorization Revision Final Rule, promulgated and effective on January 7, 2010 (75 FR 918). The effect of this action is a facility in Oregon subject to RCRA will have to comply with the accurately identified authorized State requirements in order to comply with RCRA. Such persons will have to comply with any applicable Federal requirements, such as, for example, HSWA regulations issued by EPA for which the State has not received authorization, and RCRA requirements that are not supplanted by authorized State-issued requirements. Oregon continues to have enforcement responsibilities under its State hazardous waste management program for violations of this program, but EPA retains its authority under RCRA sections 3007, 3008, 3013, and 7003, which includes, among others, the authority to:

- Conduct inspections; require monitoring, tests, analyses, or reports;
- Enforce RCRA requirements; suspend, terminate, modify or revoke permits; and
- Take enforcement actions regardless of whether the State has taken its own actions.

This revision will not impose additional requirements on the regulated community.

D. Why wasn't there a proposed rule before this rule?

The EPA did not publish a proposal before today's rule because we view this as a correction to the existing federally authorized program and do not expect comments that oppose this approval. We are providing an opportunity for public comment now. In addition to this rule, in the Proposed Rules section of today's **Federal Register**, we are publishing a separate document that proposes to correct Oregon's federally authorized program. If we receive comments, which oppose this authorization, that document will serve as a proposal to authorize these changes.

E. What happens if EPA receives comments on this action?

If EPA receives comments that oppose this action, EPA will publish a document in the **Federal Register** withdrawing this rule before it takes effect. EPA will then address public comments in a later final rule based on the proposed rule in this **Federal Register**. You may not have another opportunity to comment. If you want to comment on this authorization, you must do so at this time.

F. What has Oregon previously been authorized for?

Oregon initially received final authorization on January 30, 1986, effective January 31, 1986 (51 FR 3779), to implement the RCRA hazardous waste management program. EPA granted authorization for changes to Oregon's program on March 30, 1990, effective on May 29, 1990 (55 FR 11909); August 5, 1994, effective October 4, 1994 (59 FR 39967); June 16, 1995, effective August 15, 1995 (60 FR 31642); October 10, 1995, effective December 7, 1995 (60 FR 52629); September 10, 2002, effective September 10, 2002 (67 FR 57337); June 26, 2006, effective June 26, 2006 (71 FR 36216); and January 7, 2010, effective January 7, 2010 (75 FR 918).

G. What changes are we authorizing with this action?

On January 7, 2010, EPA published a final rule under docket EPA–R10–RCRA 2009–0766 granting final authorization for changes the State of Oregon made to its federally authorized RCRA Hazardous Waste Management Program. These authorized changes included, among others, the Federal Recycled Used Oil Management Standards; Clarification rule, promulgated on July 30, 2003. This action will remove the inaccurate authorization reference to the Federal Recycled Used Oil Management Standards; Clarification rule, promulgation on July 30, 2003 (68 FR 44659) from the State of Oregon's federally authorized RCRA Hazardous Waste Management Program.

H. Who handles permits after the authorization takes effect?

This authorization does not affect the status of State permits and those permits issued by the EPA because no substantive requirements are a part of this correction. Oregon will continue to issue permits for all the provisions for which it is authorized and administer the permits it issues. If EPA issued permits prior to authorizing Oregon for these revisions, these permits would continue in force until the effective date of the State's issuance or denial of a State hazardous waste permit, at which time EPA would modify the existing EPA permit to expire at an earlier date, terminate the existing EPA permit for cause, or allow the existing EPA permit to otherwise expire by its terms, except for those facilities located in Indian Country. EPA will not issue new permits or new portions of permits for provisions for which Oregon is authorized after the effective date of this authorization. EPA will continue to implement and issue permits for HSWA requirements for which Oregon is not yet authorized.

I. What is codification and is EPA codifying Oregon's hazardous waste program as authorized in this proposed rule?

Codification is the process of placing the State's statutes and regulations that comprise the State's authorized hazardous waste program into the Code of Federal Regulations. This is done by referencing the authorized State rules in 40 CFR part 272. EPA is reserving the amendment of 40 CFR part 272, subpart MM for codification to a later date.

J. How would authorizing Oregon for this correction affect Indian country (18 U.S.C. 1151) in Oregon?

Oregon is not authorized to carry out its hazardous waste program in Indian country, as defined in 18 U.S.C. 1151. Indian country includes: (1) All lands within the exterior boundaries of Indian reservations within or abutting the State of Oregon; (2) any land held in trust by the U.S. for an Indian tribe; and (3) any other land, whether on or off an Indian reservation, that qualifies as Indian country. Therefore, this action has no effect on Indian country. EPA will continue to implement and administer the RCRA program on these lands.

K. Statutory and Executive Order Reviews

This action corrects the State of Oregon's federally authorized hazardous waste program pursuant to section 3006 of RCRA and imposes no requirements other than those currently imposed by State law. This action complies with applicable executive orders and statutory provisions as follows:

1. Executive Order 12866

This action is not a "significant regulatory action" under the terms of Executive Order (EO) 12866 (58 FR 51735, October 4, 1993) and is therefore not subject to review under the EO.

2. Paperwork Reduction Act

This action does not impose an information collection burden under the provisions of the Paperwork Reduction Act, 44 U.S.C. 3501 *et seq.* Burden is defined at 5 CFR 1320.3(b). This action does not establish or modify any information or recordkeeping requirements for the regulated community. EPA has determined that it is not subject to the provisions of the Paperwork Reduction Act.

3. Regulatory Flexibility Act

The Regulatory Flexibility Act (RFA), as amended by the Small Business Regulatory Enforcement Fairness Act (SBREFA), 5 U.S.C. 601 *et seq.,* generally requires Federal agencies to prepare a regulatory flexibility analysis of any rule subject to notice and comment rulemaking requirements under the Administrative Procedure Act or any other statute unless the agency certifies that the rule will not have a significant economic impact on a substantial number of small entities. Small entities include small businesses, small organizations, and small governmental jurisdictions. For purposes of assessing the impacts of this direct final rule on small entities, small entity is defined as: (1) A small business, as codified in the Small Business Size Regulations at 13 CFR part 121; (2) a small governmental jurisdiction that is a government of a city, county, town, school district or special district with a population of less than 50,000; and (3) a small organization that is any not-for-profit enterprise which is independently owned and operated and is not dominant in its field. EPA has determined that this action will not have a significant impact on small entities because the action will only have the effect of correcting pre-existing authorized requirements under State law. After considering the economic impacts of this action, I certify that this action will not have a significant economic impact on a substantial number of small entities.

4. Unfunded Mandates Reform Act

This action contains no Federal mandates under the provisions of Title II of the Unfunded Mandates Reform Act of 1995 (UMRA), 2 U.S.C. 1531–1538 for State, local, or tribal governments or the private sector. This action imposes no new enforceable duty on any State, local or tribal governments or the private sector. This action contains no regulatory requirements that might significantly or uniquely affect small government entities. Thus, EPA has determined that the requirements of section 203 of the UMRA do not apply to this action.

5. Executive Order 13132: Federalism

This action does not have federalism implications. It will not have substantial direct effects on the States, on the relationship between the national government and the States, or on the distribution of power and responsibilities among the various levels of government, as specified in Executive Order 13132 (64 FR 43255, August 10, 1999). This action authorizes preexisting State rules. Therefore, EO 13132 does not apply to this action. Although section 6 of EO 13132 does not apply to this action, because EPA did consult with officials of the State of Oregon, Department of Environmental Quality in developing this action.

6. Executive Order 13175: Consultation and Coordination With Indian Tribal Governments

This action does not have tribal implications, as specified in Executive Order 13175. This action revises an existing authorized State hazardous waste program in Oregon. This action does not have tribal implications, as specified in EO 13175 because EPA retains its authority over Indian County. Thus, EPA has determined that EO 13175 does not apply to this action.

7. Executive Order 13045: Protection of Children From Environmental Health and Safety Risks

EPA interprets Executive Order 13045 (62 FR 19885, April 23, 1997) as applying only to those regulatory actions that concern health or safety risks, such that the analysis required under section 5–501 of the EO has the potential to influence the regulation. This action is not subject to EO 13045 because it corrects an approved state program.

8. Executive Order 13211: Actions That Significantly Affect Energy Supply, Distribution, or Use

This action is not subject to Executive Order 13211 (66 FR 28355, May 22, 2001), because it is not a "significant regulatory action" as defined under EO 12866.

9. National Technology Transfer and Advancement Act

Section 12(d) of the National Technology Transfer and Advancement Act of 1995 ("NTTAA"), Public Law 104–113, section 12(d) (15 U.S.C. 272) directs EPA to use voluntary consensus standards in its regulatory activities unless to do so would be inconsistent with applicable law or otherwise impractical. Voluntary consensus standards are technical standards (*e.g.,* materials specifications, test methods, sampling procedures, and business practices) that are developed or adopted by voluntary consensus bodies. The NTTAA directs EPA to provide Congress, through the OMB, explanations when the Agency decides not to use available and applicable voluntary consensus standards bodies. EPA has determined that this action does not involve "technical standards" as defined by the NTTAA. Therefore, EPA is not considering the use of any voluntary consensus standards.

10. Executive Order 12898: Federal Actions To Address Environmental Justice in Minority Populations and Low-Income Populations

Executive Order 12898 (59 FR 7629 (Feb. 16, 1994) establishes Federal executive policy on environmental justice. Its main provision directs Federal agencies, to the greatest extent practicable and permitted by law, to make environmental justice part of their mission by identifying and addressing, as appropriate, disproportionately high and adverse human health or environmental effects of their programs, policies, and activities on minority populations and low-income populations in the United States.

EPA has determined that this action will not have disproportionately high and adverse human health or environmental effects on minority or low-income populations because it does not affect the level of protection provided to human health or the environment. This action addresses a revision of the authorized hazardous waste program in the State of Oregon. EPA has determined that the action is not subject to EO 12898.

11. Congressional Review Act

The Congressional Review Act, 5 U.S.C. 801 *et seq.,* as amended by the Small Business Regulatory Enforcement Fairness Act of 1996, generally provides that before a rule may take effect, the agency promulgating the rule must submit a rule report, which includes a copy of the rule, to each House of the Congress and to the Comptroller General of the United States. EPA will submit a report containing this document and other required information to the U.S. Senate, the U.S. House of Representatives, and the Comptroller General of the United States prior to publication in the **Federal Register**. A major rule cannot take effect until 60 days after it is published in the **Federal Register**. This action is not a "major rule" as defined by 5 U.S.C. 804(2). This action will be effective February 7, 2011.

List of Subjects in 40 CFR Part 271

Environmental protection, Administrative practice and procedure, Confidential business information, Hazardous materials transportation, Hazardous waste, Indians—lands, Intergovernmental relations, Penalties, Reporting and recordkeeping requirements.

Authority: This action is issued under the authority of sections 2002(a), 3006 and 7004(b) of the Solid Waste Disposal Act, as amended, 42 U.S.C. 6912(a), 6926, 6974(b).

Dated: December 1, 2010.

Dennis J. McLerran,

Regional Administrator, EPA Region 10.

[FR Doc. 2010–31012 Filed 12–8–10; 8:45 am]

BILLING CODE 6560–50–P

DEPARTMENT OF TRANSPORTATION

National Highway Traffic Safety Administration

49 CFR Part 572

[Docket No. NHTSA–2010–0147]

RIN 2127–AK34

Anthropomorphic Test Devices; Hybrid III 6-Year-Old Child Test Dummy, Hybrid III 6-Year-Old Weighted Child Test Dummy

AGENCY: National Highway Traffic Safety Administration, Department of Transportation.

ACTION: Final rule.

SUMMARY: This final rule makes two changes to the agency's specifications for the Hybrid III six-year-old child dummy, and the Hybrid III six-year-old weighted child test dummy. First, to improve the durability of the dummies' femurs we are changing the design of and material used for the femur assembly. Second, we correct the drawings for the abdomen insert so that the abdominal insert dimensions on the drawings reflect actual parts in the field. The correction responds to a petition for rulemaking submitted by Denton ATD and First Technology Safety Systems.

DATES: The effective date of this final rule is June 7, 2011. The incorporation by reference of certain publications listed in the regulations is approved by the Director of the Federal Register as of June 7, 2011.

Petitions for reconsideration: Petitions for reconsideration of this final rule must be received not later than January 24, 2011.

Privacy Act: Anyone is able to search the electronic form of all submissions received into any of our dockets by the name of the individual submitting the comment (or signing the comment, if submitted on behalf of an association, business, labor union, *etc.*). You may review DOT's complete Privacy Act Statement in the **Federal Register** published on April 11, 2000 (Volume 65, Number 70; Pages 19477–78).

ADDRESSES: Petitions for reconsideration of this final rule must refer to the docket and notice number set forth above and be submitted to the Administrator, National Highway Traffic Safety Administration, 1200 New Jersey Avenue, SE., Washington, DC 20590. (A copy of the petition will be placed in the docket.)

FOR FURTHER INFORMATION CONTACT: For non-legal issues, you may call Peter Martin, NHTSA Office of Crashworthiness Standards (telephone 202–366–5668) (fax 202–493–2990). For legal issues, you may call Deirdre Fujita, NHTSA Office of Chief Counsel (telephone 202–366–2992) (fax 202–366–3820). The mailing address for these officials is the National Highway Traffic Safety Administration, 1200 New Jersey Avenue, SE., Washington, DC 20590.

SUPPLEMENTARY INFORMATION:

Table of Contents

I. Overview
II. Femur Improvements
a. Femur Design Changes
b. Analysis of the New Femur Design
1. Stress Analysis of the Fillet Effect
2. Dynamic Evaluation
i. Comparing Test Results of the Modified HIII–6C Test in the Marathon, Boulevard, and Decathlon Child Restraint Systems
ii. Comparing the Results of the Britax Marathon Test of the Modified HIII–6C (test H06337) to Those of a Test of an Original HIII–6C Where Femur Failure Occurred (test H06120)
iii. Effect on FMVSS No. 213 Injury Metrics
iv. Effect on Dummy Kinematics
v. Dummy Response Biofidelity
vi. Hip Lock
III. Abdominal Insert
IV. Effective Date
V. Rulemaking Analyses and Notices

I. Overview

This final rule makes two changes to the agency's specifications for the Hybrid III six-year-old child dummy (HIII–6C) set forth in 49 CFR part 572, Subpart N, and for the Hybrid III six-year-old weighted child test dummy (HIII–6CW) in 49 CFR part 572, Subpart S. The notice of proposed rulemaking (NPRM) upon which this final rule is based was published October 21, 2009, 74 FR 53987, Docket No. NHTSA–09–0166.

First, to improve the durability of the dummies' femurs, we are changing the design of and material used for the femur assembly. The primary modifications include the addition of a ¼-inch (6.35 millimeter (mm)) fillet between the femur clamp and the connecting segment (these components are described in detail in section II.b of the NPRM preamble) of the machined femur, removal of material from the connecting segment, and a material change from aluminum bronze to 4340 steel. These changes are made by replacing the drawings of the femur in

the drawing package specified in 49 CFR part 572, Subpart N ("Six-year-old child test dummy") and in Subpart S ("Six-year-old weighted child test dummy"), the parts lists, and the "Procedures for Assembly, Disassembly, and Inspection" ("PADI") documents incorporated by reference into those regulations.

The second change corrects the drawings for the abdomen insert so that the abdominal insert dimensions on the drawings reflect actual parts in the field.

The October 21, 2009 NPRM provided a detailed discussion of the femur failures that were occurring with the HIII–6C dummy, the proposed solution to those failures, and how the agency proposed to amend the specifications for the HIII–6C and the HIII–6CW dummies.

NHTSA received no comments on the October 21, 2009 NPRM. We are adopting the changes proposed in the NPRM for the reasons discussed in that document.

II. Femur Improvements

The present design of the HIII–6C femur is specified in 49 CFR part 572, Subpart N.[1] [2] The HIII–6C machined femur, which is one of the femur assembly parts, is illustrated in Figure 1 below. This one-piece part is machined from bar stock and serves to couple the main femur shaft to a smaller shaft protruding from the femur ball (a representation of a human femur head). The portion of the part that is attached to the femur shaft is referred to as the "femur clamp" and the portion that is attached to the ball shaft is referred to as the "connecting segment." The femur ball shaft, retaining flange, and femur ball connect the machined femur to the dummy's pelvis. Similar to a human hip joint, the ball in the HIII–6C femur assembly allows for rotation of the dummy hip joint. The flange is used to attach the femur assembly to the pelvis. The entire femur assembly is found within the lower torso, and the material specification for this assembly, including the machined femur, shaft, flange and ball was originally Aluminum Bronze C–624 AMC0–18. (The femur load cell, the response of which is discussed in the "dynamic evaluation" section below, is located in the distal portion of the upper leg (*i.e.,* farther from the pelvis) and not in the area of the machined femur.)

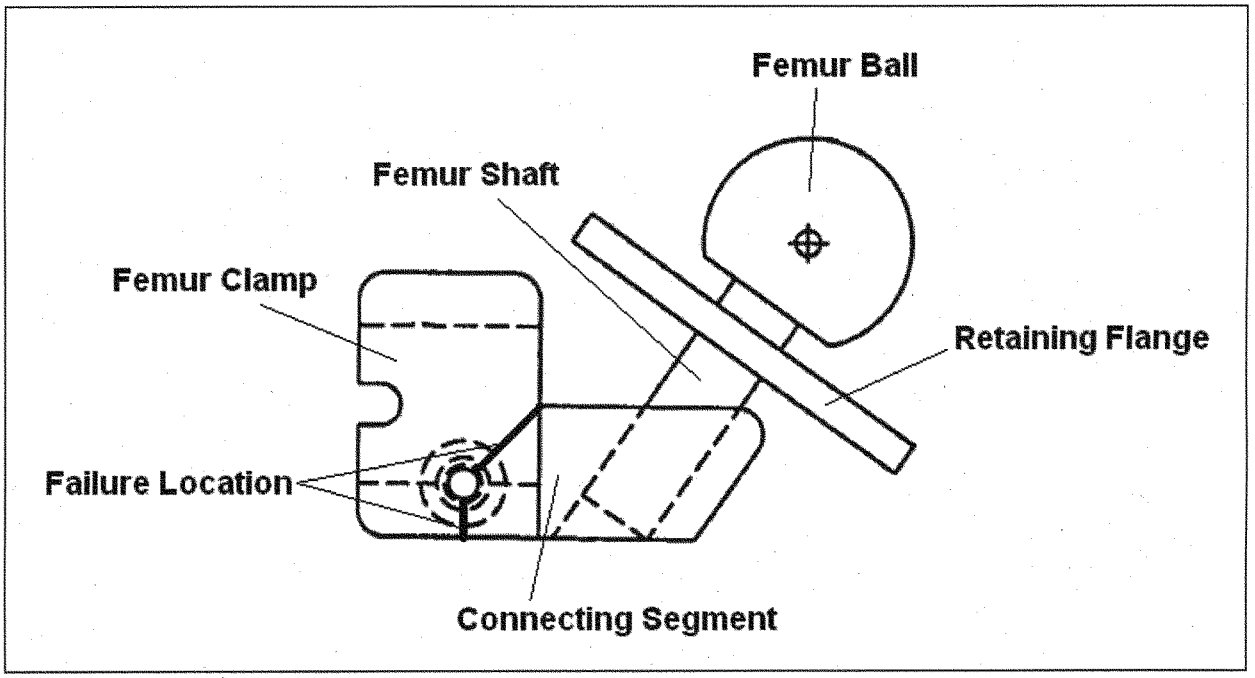

Figure 1: Illustration of femur assembly

Failures of the HIII–6C femur appear to have initiated at a sharp corner between the femur clamp and connecting segment sections of the machined femur. The approximate location of the femur failure is depicted in Figure 1. The fracture was observed from this corner to the bolt hole within the femur clamp, at an angle of approximately 45°. The failure continued through the thin section of material directly beneath the bolt hole, causing complete separation of the machined femur. Additionally, in one failed component, small indents on the inner diameter of the retaining flange were observed, indicating potential contact between the flange and shaft. Pictures of a fractured part can be found in the technical report docketed with the NPRM (Docket NHTSA–09–0166–0007.1).

a. Femur Design Changes

The modification made today to improve the femur's durability increases the strength and durability of the femur assembly by fabricating the machined femur and shaft from 4340 steel, which has a higher yield strength than the original material, Aluminum Bronze C–624 AMC0–18, while keeping the ball and retaining flange as the original aluminum bronze material. A ¼-inch (6.35 mm) fillet is added between the

[1] Complete drawings for the current HIII–6C femur can be found in Docket No. NHTSA–2002–12541.

[2] The HIII–6CW is based on the HIII–6C, with weight added (10 pounds) to represent larger children. The femur assembly is the same for both the HIII–6CW and the HIII–6C dummies. The discussion set forth in this section applies to the HIII–6CW as well, unless otherwise noted.

femur clamp and the connecting segment to eliminate stress risers that were present on the original femur, and a portion of the connecting segment material near the femur clamp is removed. The weight of the modified femur is only 0.002 lb (0.001 kilograms (kg)) heavier than the original femur. Table 1 below compares the weights and material properties of the original femur and the new femur.

TABLE 1—WEIGHT AND MATERIAL PROPERTIES FOR THE ORIGINAL AND NEW HIII–6C FEMUR DESIGN

	Femur design measured weight	Material and yield strength	
Original	0.532 lb (0.241 kg)	Aluminum Bronze C–624 AMC0–18	48,000 psi
New	0.534 lb (0.242 kg)	4340 Steel	114,000 psi

To implement this change in femur design and material, the following changes are made to the materials describing the HIII–6C in 49 CFR part 572. Drawings 127–3017–1&–2, "6 YR H3–FEMUR MACHINED" is replaced with drawings 127–3017–1S&–2S, which show the new machined femur.[3] The femur assembly drawings (127–3016–1&–2) are also replaced due to the new femur design, with new part numbers 127–3016–1S&–2S. Higher assembly drawings including 127–3000, "LOWER TORSO ASSEMBLY" and the complete assembly drawings (127–0000) are amended to show the modified part. These revisions are noted on drawing SA572–127DRL–2. The PADI is also updated so that it shows the new machined femur in figures, and reports the proper lower torso assembly and total weight for the dummy. Finally, the part numbers for the machined femur and the femur assembly are changed in the Parts/Drawings list, along with the revision letters for higher assembly drawings, as appropriate.

Copies of the HIII–6C drawing package, PADI, and Parts/Drawings list that include the change in femur design can be obtained online at *http://www.regulations.gov*, in the same docket as this final rule.

b. Analysis of the New Femur Design

NHTSA has determined that the changes to the femur prevent the femur from failing and do not compromise the utility of the test dummy. This determination is based on an analysis showing the stress is reduced by the addition of the fillet, and on an analysis of dynamic test results, as discussed below.

1. Stress Analysis of the Fillet Effect

The one-piece HIII–6C machined femur—which couples the main femur shaft to the femur ball shaft—forms a ninety-degree angle where the femur clamp intersects the connecting segment. Originally, the corner radius at this intersection was very sharp. This sharp corner led to high stresses when the femur was loaded. We have estimated that adding a fillet to increase the corner radius will reduce stresses by approximately 1.6 to two times those in the femur without the fillet. It is noted that this is only an estimate, as the loading conditions present in the femur during a FMVSS No. 213 type sled test were highly simplified in order to provide a rough estimate of the fillet benefit. Details about the stress reduction approximation can be found in the technical report accompanying the NPRM (Docket NHTSA–09–0166–0007.1). Because the fillet design results in substantially reduced stress in the femur of the dummy, we believe that adding the fillet and using the 4340 steel material will avoid femur failure.

2. Dynamic Evaluation

NHTSA evaluated the new femur in April 2006 at the MGA testing facility. To assess the effect of the component modification, we tested a HIII–6C with the new femurs (which we refer to as a "modified HIII–6C" or "modified dummy") in a Britax Marathon child restraint, Britax Boulevard and Britax Decathlon to the FMVSS No. 213 test conditions, and compared the results.[4] To obtain a greater understanding of the loading experienced by the femur assembly, instrumentation was added to the dummy to allow measurement of triaxial accelerations in the pelvis and forces and moments in the femurs. Additionally, to determine the effect of the new femur, we compared test results from a test in which the femur had failed to those of a test with a modified dummy, under conditions that had previously caused failure, i.e., the modified HIII–6C dummy was tested in the Britax Marathon to the FMVSS No. 213 sled pulse.

In all tests of the new femurs, there were no femur failures. In addition, test data relating to left and right femur moments, FMVSS No. 213 injury measures, dummy kinematics, and other factors concerning the performance of the dummy raised no concerns about the new femur design. The testing indicated that use of the new femur in the HIII–6C and the HIII–6CW will not affect FMVSS testing, except to make the dummies more durable.

i. Comparing Test Results of the Modified HIII–6C Test in the Marathon, Boulevard, and Decathlon Child Restraint Systems

NHTSA measured and compared maximum forces and moments measured in the femur load cells (over both legs) of the modified HIII–6C dummy in the Britax Marathon, Boulevard, and Decathlon. The Marathon and Boulevard showed similar maximum forces, while the Decathlon had a higher maximum femur force. All maximum forces occurred along the Z-axis, and all maximum moments were about the Y-axis.

[3] The femur shaft, drawing 127–3021, with material specification Aluminum Bronze 3/8 rnd C–624 AMC0–18, is replaced with drawing 127–3021S with material specification 4340 Steel.

[4] The Boulevard and Decathlon models were each tested with a modified HIII–6C and with a HIII–6CW with the modified femur design. No femur failure occurred in any of the tests. For simplicity and because the test results of the HIII–6CW are not comparable to those of the HIII–6C, tests of the HIII–6CW dummy are not generally discussed in this preamble. However, results for all tests of the HIII–6CW are discussed in the technical report accompanying the NPRM (Docket NHTSA–09–0166–0007.1), including test numbers, maximum head, chest and pelvis accelerations and left and right femur maximum moments and forces.

TABLE 2—MAXIMUM FORCES AND MOMENTS MEASURED IN THE FEMUR LOAD CELLS OF MODIFIED HIII–6C DUMMIES IN A FMVSS NO. 213 COMPLIANCE TESTING ENVIRONMENT

Femur measure	Britax Marathon *	Britax Decathlon *	Britax Boulevard
Max Force (N)	1492.9	2264.7	1578.4
Max Moment (Nm)	−78	−63.9	−70

* *Marathon:* Restraint changed from upright to reclined during test. Decathlon: Top tether webbing separated at the attachment clip and the restraint changed position from upright to reclined.

At the time of maximum moment there were visible differences in the degree of knee extension (test video pictures are provided in the technical report accompanying the NPRM, Docket NHTSA–09–0166–0007.1). These visual differences in response are consistent with the differences in force and moment magnitude seen in the tests.

Maximum left and right femur forces from the tests of the modified HIII–6C dummy with the new femur are displayed in Figure 2, while Figure 3 shows the maximum moments measured in the left and right legs during each test. In general, force and moment measurements made in the left and right femurs were similar, though not identical. This may give some insight into why failures were observed in the left leg, right leg, or both legs in any given test. We believe that the failures were caused by stresses exceeding the material strength of the femur, so the occurrence of one femur failure, rather than both, may be due to the fact that the forces present during the test were unevenly distributed.

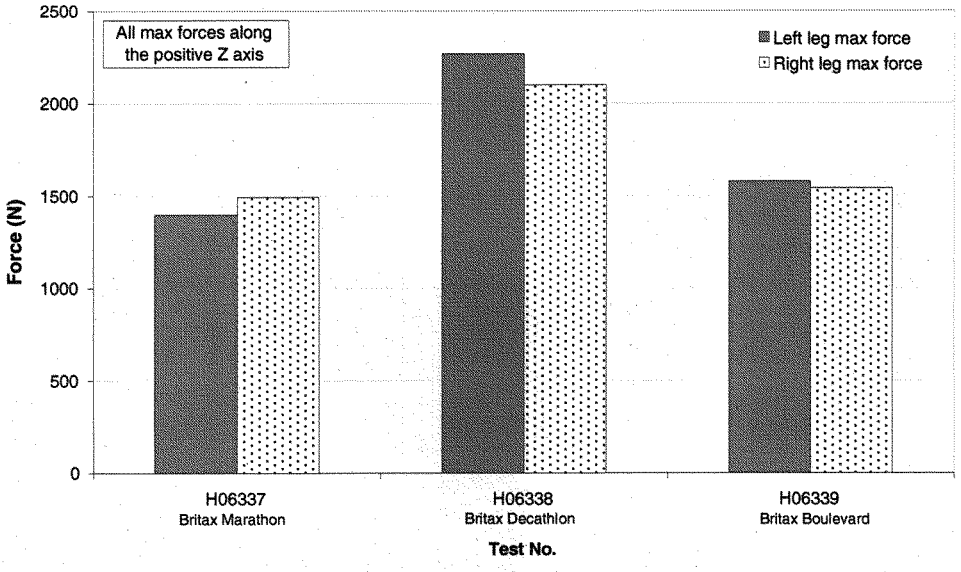

Figure 2: Magnitude of maximum femur forces measured in FMVSS No. 213 Tests in modified HIII-6C dummies with the new femur design.

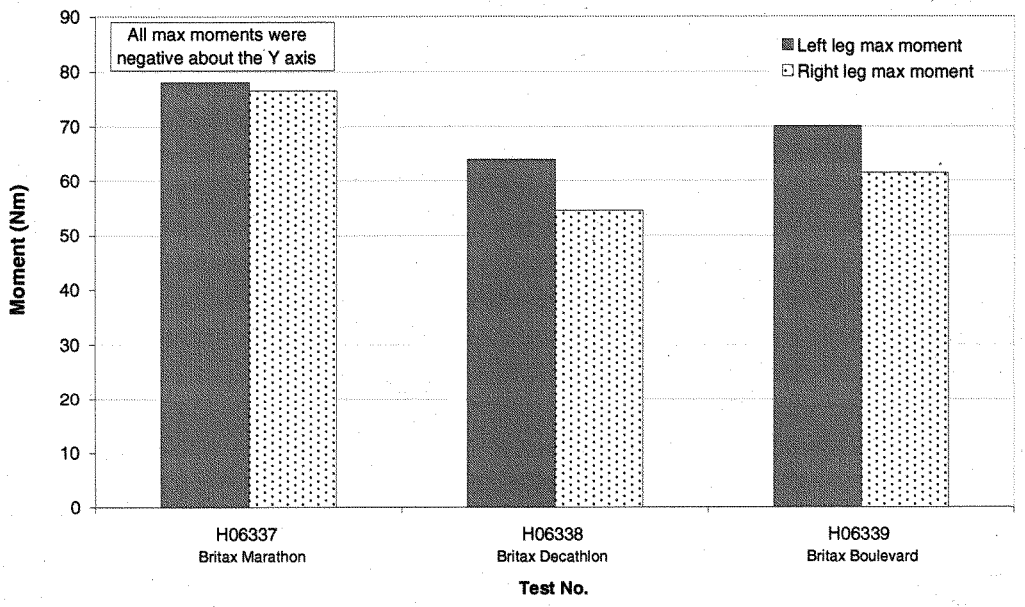

Figure 3: Magnitude of maximum femur moments measured in FMVSS No. 213 tests in modified HIII-6C dummies with the new femur design.

ii. Comparing the Results of the Britax Marathon Test of the Modified HIII–6C (test H06337) to Those of a Test of an Original HIII–6C Where Femur Failure Occurred (test H06120)

Both tests were performed using the same dummy (S/N 158).[5] In test H06120 (with the original femurs), the left femur failed and detached completely. The right knee of this dummy was in a fully extended position, which could have resulted from the change in kinematics due to loss of one leg. In test H06337 (modified dummy), there were no femur failures and both legs remained attached to the dummy.[6]

iii. Effect on FMVSS No. 213 Injury Metrics

In these two tests, we compared the maximum head and chest accelerations.

[5] Both tests were performed using the same dummy (S/N 158). However, because FMVSS No. 213 does not require measurement of femoral loads, no femoral force data was available for test H06120 with the original femurs. Therefore, comparisons were made between pre- and post-test positioning, head and chest measurements, and dummy position throughout the test, as indicated by the test videos. This is discussed in the technical report accompanying the NPRM.

[6] We note that in test H06337 (modified dummy), the child restraint had multiple cracks in its base following the test, and during the test the restraint position shifted from upright to reclined. However, these factors are not likely linked to the performance of the new femur.

As seen in Figure 4, these measures were similar for both tests, suggesting that the new femur does not affect the dummy head or chest response significantly. Specifically, peak chest resultant acceleration, an FMVSS No. 213 injury criterion, increased only 2.42 percent from 41.4 g with the current Part 572 femur to 42.4 g with the new femur. However, we note that the maximum head Z and resultant accelerations occurred after the time of femur failure in test H06120. Therefore, it is possible that the acceleration magnitude or response in time was affected by the loss of one limb.

We also compared the 36 millisecond (ms) head injury criterion (HIC) values. These values are displayed in Table 3 and Figure 5, along with the previously-discussed peak chest accelerations (Figure 6). The response measured in the modified HIII–6C resulted in a 5.65 percent decrease in HIC over the response of the original HIII–6C. These relatively low changes in response suggest that HIC and chest g's are not significantly altered by the femur replacement.

Table 3: HIC 36 and peak chest acceleration values for matched FMVSS No. 213 tests. (These results are presented in Figures 5 and 6, below.)

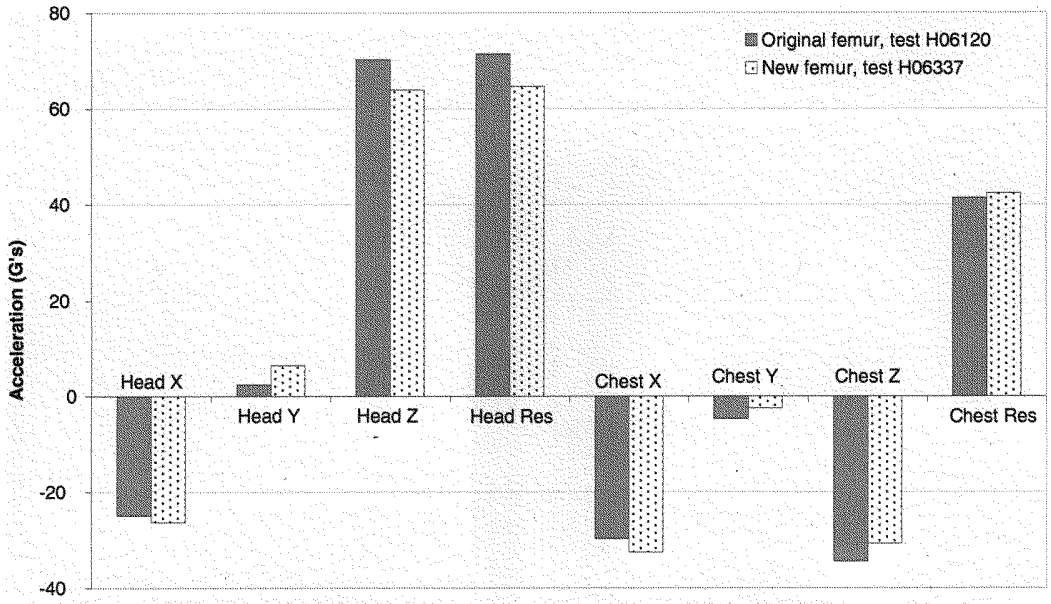

Figure 4: Maximum head and chest accelerations during FMVSS No. 213 tests using a Britax Marathon seat. See notes in the Technical Report accompanying the NPRM (Docket NHTSA-09-0166-0007.1) for information on Head X and Y accelerations.

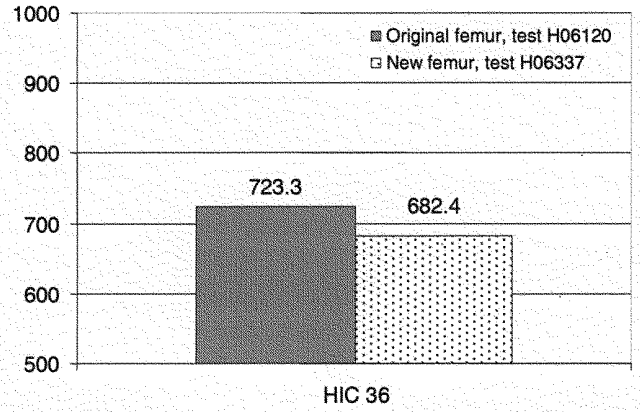

Figure 5: HIC 36 values for tests of the Britax Marathon child seat where the original femur failed (H06120) and for a new femur which did not fail (H06337).

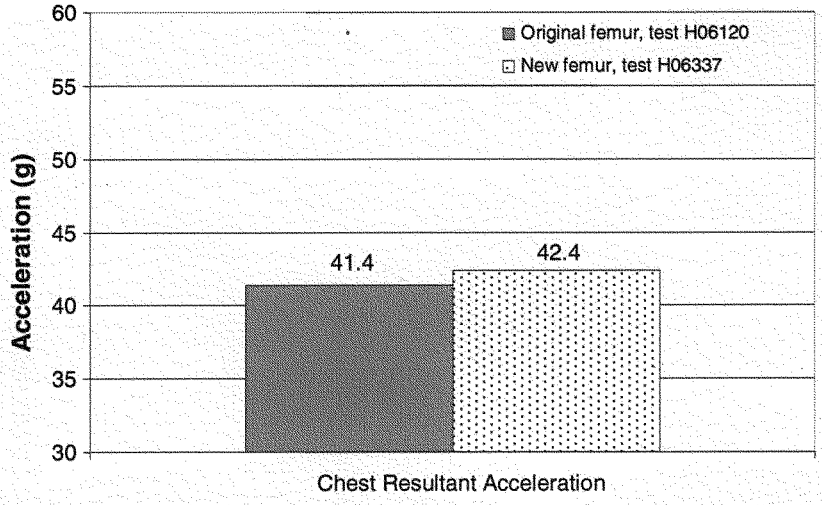

Figure 6: Peak chest acceleration values for tests of the Britax Marathon child seat where the original femur failed (H06120) and for a new femur which did not fail (H06337).

iv. Effect on Dummy Kinematics

We have determined that use of the new femur does not change the dummy's kinematic response. We analyzed test video comparing the kinematics of the dummy in tests H06337 (modified dummy) and H06120 (femur failure). (Photographs from the video are presented in the technical report accompanying the NPRM, Docket NHTSA–09–0166–0007.1.) Until the time of maximum femur force, the position of the dummy in each test is fairly similar. At maximum force, the dummy's knees in H06337 (modified dummy) are only slightly more extended and lower than the knees in H06120 (femur failure). Although at the approximate time of femur failure in test H06120 the positions of the two dummies are different, they are only slightly so, and the fully extended left knee of the dummy in test H06120 (femur failure) and the additional excursion of the leg (as noted by the position of the knee marker) may be indicative of the failing femur component. Similarly, after femur failure at 100 ms, there are slight differences in dummy position which could be attributable to the loss of one leg in the test H06120. All in all, there is no indication that the new femur significantly alters dummy response.

v. Dummy Response Biofidelity

Since the new femur has the same geometry as the original femurs where it interfaces with the pelvis, the new femur does not behave any differently than the original femur. As discussed in the previous sections, little difference in head and chest measurements and dummy kinematics was observed in the dummy with the new versus the current Part 572 femur. There is no indication that the slight modification in femur design and material affects dummy biofidelity.

vi. Hip Lock

The new femur was inspected for indications of susceptibility to hip lock. Hip lock is a condition where flexion of the dummy's hip joint is mechanically limited due to contact between the femur and the retaining ring or other pelvis structure.[7] There was no evidence of excessive wear near the retaining ring/ball joint of the new femurs. Some wear was noticed on the upper leg of dummy S/N 155 where the femur clamp was fastened to the upper leg weldment. However, because this wear is located at a fastening site, metal-to-metal contact is inevitable and is not indicative of hip lock.

III. Abdominal Insert

This final rule changes Drawing No. 127–8210 of the HIII–6C drawing package, which depicts the abdominal insert for the dummy. It makes a similar change to the HIII–6CW drawing package.[8] This change responds to a petition from FTSS and Denton. Both manufacturers sought to revise the abdomen insert drawing to match the part mold dimensions.

In the NPRM, the agency granted the request but proposed to revise the drawing of the abdominal insert based on dimensions of actual abdominal inserts, rather than dimensions of the mold for the inserts. Nearly all changes were in agreement with the petitioners' mold-based dimensions.

Table 4 shows the changes this final rule makes to key abdomen dimensions. "Fig. Ref" numbers in the table refer to Figure 7, which shows the original dimensions.

TABLE 4—HIII–6C KEY ABDOMEN DIMENSIONS

Description	Fig. ref.	Adopted spec.
Overall height (in.)	1	3.81 +/− .20
Ledge height (in.)	2lt	1.53 +/− .20

[7] Hip lock in the HIII–50th percentile male femur led to design modifications that prevented "hard" (*i.e.,* metal-to-metal contact) hip lock from occurring (61 FR 67953, Dec. 26, 1996). In that adult dummy, hard hip lock was characterized by spikes in the unfiltered pelvis and chest accelerometer readings, high and sharply-pointed chest z acceleration traces, non-unimodal chest x and resultant accelerations, and a high tension component in the lumbar z force (Klinich *et al,* "Evaluation of a Proposed Hybrid III Hip Modification," Stapp Paper No. 952730, 1995).

[8] The HIII–6CW is the HIII–6C with weight added (10 pounds) to represent larger children. The abdominal insert drawing is the same for both the HIII–6CW and the HIII–6C dummies. Thus, the discussion set forth in this section applies to the HIII–6CW as well.

TABLE 4—HIII–6C KEY ABDOMEN DIMENSIONS—Continued

Description	Fig. ref.	Adopted spec.
	3rt	1.53 +/− .20
Depth excl.plug (in.)	4	2.80 +/− .20
Depth incl. plug (in.)	5	2.80 +/− .20
Taper angle of cone (degrees)	6lt	121/129
	7rt	121/129
Notch Half Width (in.)	8	1.50 +/− .20
Notch Depth (in.)	9	1.40 +/− .20
Width Bottom of Cone (in.)	10	5.40 +/− .40

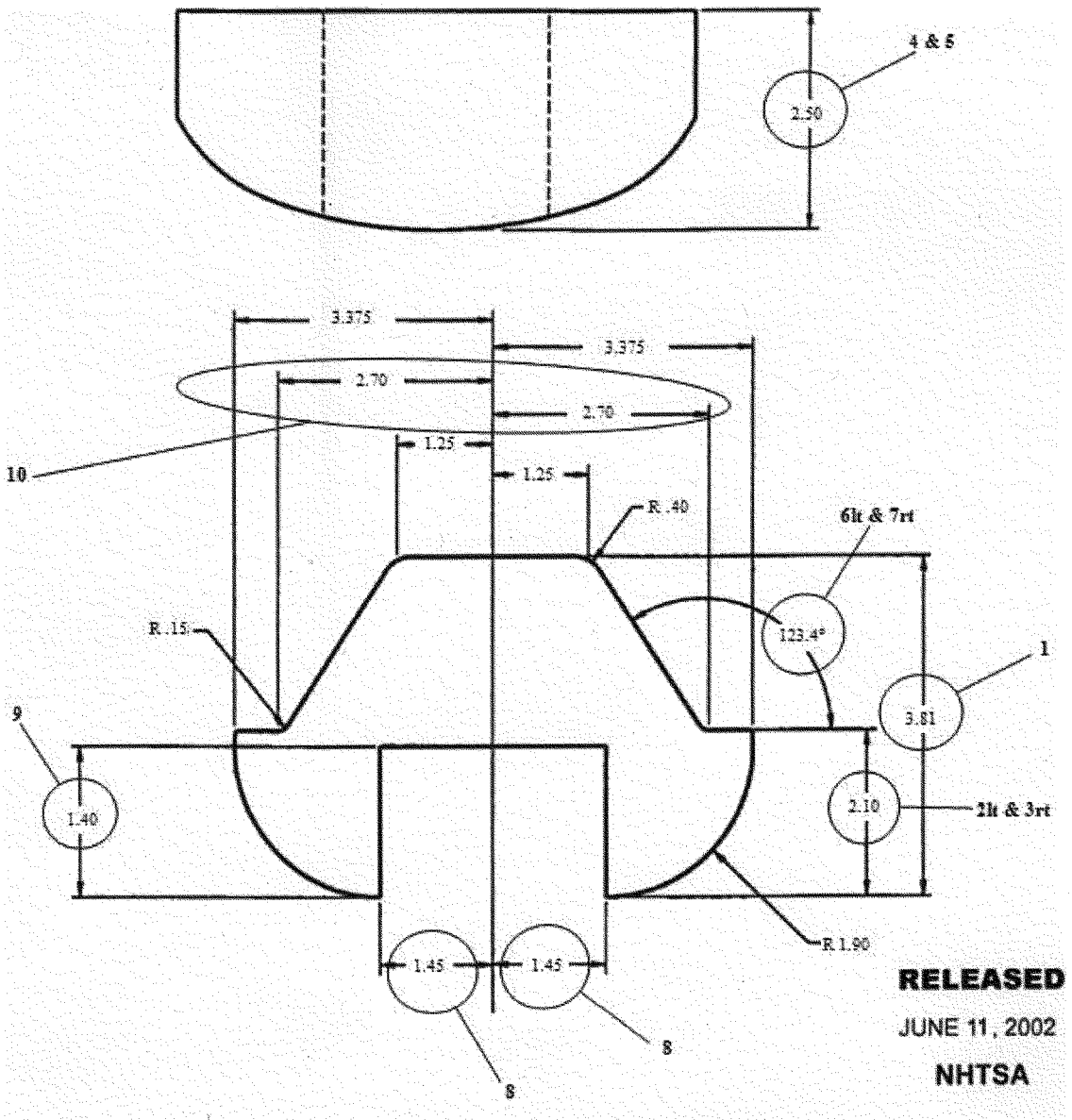

Figure 7: Portions of the HIII-6C abdomen insert drawing

IV. Effective Date

The changes to the femur design of the HIII–6C and HIII–6CW are effective 180 days after publication of this final rule. The changes to the abdomen insert drawing are effective on the same date. Although the NPRM proposed that the corrections to the abdomen insert drawing be effective 45 days after publication of a final rule, the agency has decided to make all the changes to the drawing package effective on the same date to simplify the incorporation by reference of the changed drawings in the drawing package.

V. Rulemaking Analyses And Notices

Executive Order 12866 and DOT Regulatory Policies and Procedures

This rulemaking action is not considered a significant regulatory action under Executive Order 12866 or the Department of Transportation's (DOT's) regulatory policies and procedures (44 FR 11034, February 26, 1979).

This rule will only affect the HIII–6C and HIII–6CW test dummies by adding a ¼-inch fillet between the femur clamp and the connecting segment of the machined femur, removing material from the connecting segment, and changing the material from Aluminum Bronze C–624 AMC0–18 to 4340 steel. We stated in the final rule [9] that adopted the HIII–6C into 49 CFR part 572 that the cost of an uninstrumented HIII–6C dummy is approximately $30,000 and that instrumentation will add approximately $25,000 to $40,000 to the cost, depending on the number of data channels the user chooses to collect. We do not expect the amendments of this final rule to significantly affect the cost of the dummy.

Further, this final rule does not impose any requirements on anyone. NHTSA will only use HIII–6C and HIII–6CW dummies for compliance testing that meet all of the criteria specified in this rule, but the agency does not require manufacturers to test with the Part 572 test dummies. Businesses will only be indirectly affected by this final rule, to the extent that they choose to manufacture or test with the dummy. Because the economic impacts of this final rule are so minimal, no further regulatory evaluation is necessary.

Regulatory Flexibility Act

Pursuant to the Regulatory Flexibility Act (5 U.S.C. 601 *et seq.,* as amended by the Small Business Regulatory Enforcement Fairness Act (SBREFA) of 1996), whenever an agency is required to publish a proposed or final rule, it must prepare and make available for public comment a regulatory flexibility analysis that describes the effect of the rule on small entities (*i.e.,* small businesses, small organizations, and small governmental jurisdictions), unless the head of the agency certifies the rule will not have a significant economic impact on a substantial number of small entities. The Small Business Administration's regulations at 13 CFR part 121 define a small business, in part, as a business entity "which operates primarily within the United States." (13 CFR 121.105(a)).

We have considered the effects of this rulemaking under the Regulatory Flexibility Act. I hereby certify that this final rule will not have a significant economic impact on a substantial number of small entities. Changing the femur design and correcting the abdominal insert drawing will not impose any requirements on anyone. NHTSA does not require anyone to manufacture or redesign the HIII–6C or HIII–6CW or to test vehicles or child restraints with the devices.

National Environmental Policy Act

NHTSA has analyzed this final rule for the purposes of the National Environmental Policy Act and has determined that it will not have any significant impact on the quality of the human environment.

Executive Order 13132 (Federalism)

NHTSA has examined today's final rule pursuant to Executive Order 13132 (64 FR 43255, August 10, 1999) and concluded that no additional consultation with States, local governments or their representatives is mandated beyond the rulemaking process. The agency has concluded that the final rule does not have federalism implications because the rule does not have "substantial direct effects on the States, on the relationship between the national government and the States, or on the distribution of power and responsibilities among the various levels of government." This rule does not impose any requirements on anyone. Businesses will be affected only if they choose to manufacture or test with the HIII–6C or HIII–6CW dummies.

Further, no consultation is needed to discuss the preemptive effect of today's final rule. NHTSA's safety standards can have preemptive effect in two ways. This final rule would amend 49 CFR part 572 and is not a safety standard.[10] This Part 572 final rule does not impose any requirements on anyone.

Civil Justice Reform

With respect to the review of the promulgation of a new regulation, section 3(b) of Executive Order 12988, "Civil Justice Reform" (61 FR 4729, February 7, 1996) requires that Executive agencies make every reasonable effort to ensure that the regulation: (1) Clearly specifies the preemptive effect; (2) clearly specifies the effect on existing Federal law or regulation; (3) provides a clear legal standard for affected conduct, while promoting simplification and burden reduction; (4) clearly specifies the retroactive effect, if any; (5) adequately defines key terms; and (6) addresses other important issues affecting clarity and general draftsmanship under any guidelines issued by the Attorney General. This document is consistent with that requirement. Pursuant to this Order, NHTSA notes as follows.

The issue of preemption is discussed above in connection with E.O. 13132. NHTSA notes further that there is no requirement that individuals submit a petition for reconsideration or pursue other administrative proceeding before they may file suit in court.

Paperwork Reduction Act

Under the Paperwork Reduction Act of 1995, a person is not required to respond to a collection of information by a Federal agency unless the collection displays a valid control number from the Office of Management and Budget (OMB). This final rule does not have any requirements that are considered to be information collection requirements as defined by the OMB in 5 CFR part 1320.

National Technology Transfer and Advancement Act

Section 12(d) of the National Technology Transfer and Advancement Act of 1995 (NTTAA), Public Law 104–113, section 12(d) (15 U.S.C. 272) directs NHTSA to use voluntary consensus standards in its regulatory activities unless doing so would be inconsistent with applicable law or otherwise impractical. Voluntary consensus standards are technical standards (e.g., materials specifications, test methods, sampling procedures, and business practices) that are developed or adopted by voluntary consensus standards bodies. The NTTAA directs NHTSA to provide Congress, through OMB, explanations when the agency decides not to use available and applicable voluntary consensus standards. There are no voluntary

[9] 65 FR 2059; January 13, 2000; Docket NHTSA–99–6714.

[10] With respect to the safety standards, the National Traffic and Motor Vehicle Safety Act contains an express preemptive provision: "When a motor vehicle safety standard is in effect under this chapter, a State or a political subdivison of a State may prescribe or continue in effect a standard applicable to the same aspect of performance of a motor vehicle or motor vehicle equipment only if the standard is identical to the standard prescribed under this chapter." 49 U.S.C. 30103(b)(1). Second, the Supreme Court has recognized the possibility of implied preemption: State requirements imposed on motor vehicle manufacturers, including sanctions imposed by State tort law, can stand as an obstacle to the accomplishment and execution of a NHTSA safety standard. When such a conflict exists, the Supremacy Clause of the Constitution makes the conflicting State requirements unenforceable. *See Geier* v. *American Honda Motor Co.,* 529 U.S. 861 (2000).

consensus standards relevant to this final rule.

Unfunded Mandates Reform Act

Section 202 of the Unfunded Mandates Reform Act of 1995 (UMRA), Pub. L. 104–4, Federal requires agencies to prepare a written assessment of the costs, benefits, and other effects of proposed or final rules that include a Federal mandate likely to result in the expenditure by State, local, or tribal governments, in the aggregate, or by the private sector, of more than $100 million annually (adjusted for inflation with base year of 1995). Before promulgating a NHTSA rule for which a written statement is needed, section 205 of the UMRA generally requires the agency to identify and consider a reasonable number of regulatory alternatives and adopt the least costly, most cost-effective, or least burdensome alternative that achieves the objectives of the rule.

This final rule would not impose any unfunded mandates under the UMRA. This final rule does not meet the definition of a Federal mandate because it does not impose requirements on anyone. It amends 49 CFR part 572 by changing the femur design of two test dummies that the agency uses, and corrects a drawing of an abdominal insert for the dummies. This final rule affects only those businesses that choose to manufacture or test with the dummies. It does not result in costs of $100 million or more to either State, local, or tribal governments, in the aggregate, or to the private sector.

Plain Language

Executive Order 12866 requires each agency to write all rules in plain language. Application of the principles of plain language includes consideration of the following questions:

—Has the agency organized the material to suit the public's needs?
—Are the requirements in the rule clearly stated?
—Does the rule contain technical language or jargon that is not clear?
—Would a different format (grouping and order of sections, use of headings, paragraphing) make the rule easier to understand?
—Would more (but shorter) sections be better?
—Could the agency improve clarity by adding tables, lists, or diagrams?
—What else could the agency do to make this rulemaking easier to understand?

If you have any responses to these questions, please send them to NHTSA.

Regulation Identifier Number

The Department of Transportation assigns a regulation identifier number (RIN) to each regulatory action listed in the Unified Agenda of Federal Regulations. The Regulatory Information Service Center publishes the Unified Agenda in April and October of each year. You may use the RIN contained in the heading at the beginning of this document to find this action in the Unified Agenda.

List of Subjects in 49 CFR Part 572

Motor vehicle safety, Incorporation by reference.

■ In consideration of the foregoing, NHTSA amends 49 CFR Part 572 as follows:

PART 572—ANTHROPOMORPHIC TEST DUMMIES

■ 1. The authority citation for Part 572 continues to read as follows:

Authority: 49 U.S.C. 322, 30111, 30115, 30117 and 30166; delegation of authority at 49 CFR 1.50.

Subpart N—Six-Year-Old Child Test Dummy, Beta Version

■ 2. Section 572.120 is amended by revising the introductory paragraph of (a)(1), paragraph (a)(1) through (a)(4), and paragraphs (b) and (c)(1), to read as follows:

§ 572.120 Incorporation by reference.

(a) * * *

(1) A drawings and inspection package entitled, "Parts List and Drawings, Part 572 Subpart N, Hybrid III Six-Year Old Child Crash Test Dummy (H–III6C, Beta Version), June 2009," consisting of:

(i) Drawing No. 127–1000, 6-year H3 Head Complete, incorporated by reference in § 572.122,

(ii) Drawing No. 127–1015, Neck Assembly, incorporated by reference in § 572.123,

(iii) Drawing No. 127–2000, Upper Torso Assembly, incorporated by reference in § 572.124,

(iv) Drawing No. 127–3000, Lower Torso Assembly, incorporated by reference in § 572.125,

(v) Drawing No. 127–4000–1 and 4000–2, Leg Assembly, incorporated by reference in § 572.126,

(vi) Drawing No. 127–5000–1 and 5000–2, Arm Assembly, incorporated by reference in §§ 572.121, 572.124, and 572.125 as part of a complete dummy assembly, and,

(vii) Parts List and Drawings, Hybrid III Six-year-old Child Test Dummy (H–III6C, Beta Version), dated June 1, 2009, incorporated by reference in § 572.121;

(2) A procedures manual entitled "Procedures for Assembly, Disassembly, and Inspection (PADI) of the Hybrid III 6-year-old Child Crash Test Dummy (H–III6C), Beta Version, June 1, 2009," incorporated by reference in § 572.121;

(3) SAE Recommended Practice J211–1995, "Instrumentation for Impact Tests—Parts 1 and 2, dated March, 1995," incorporated by reference in § 572.127;

(4) SAE J1733 Information Report, titled "Sign Convention for Vehicle Crash Testing," dated December 1994, incorporated by reference in § 572.127.

(b) The Director of the Federal Register approved the materials incorporated by reference in accordance with 5 U.S.C. 552(a) and 1 CFR part 51. Copies of the materials may be inspected at the Department of Transportation, Docket Operations, Room W12–140, 1200 New Jersey Avenue, SE., Washington, DC 20590, telephone (202) 366–9826, and at the National Archives and Records Administration (NARA), and in electronic format through Regulations.gov. For information on the availability and inspection of this material at NARA, call 202–741–6030, or go to: *http://www.archives.gov/federal_register/code_of_federal_regulations/ibr_locations.html.* For information on the availability and inspection of this material at Regulations.gov, call 1–877–378–5457, or go to: *http://www.regulations.gov.*

(c) * * *

(1) The drawings and specifications package, the parts list, and the PADI document referred to in paragraphs (a)(1), and (a)(2) of this section, are available in electronic format through *www.Regulations.gov* and in paper format from Leet-Melbrook, Division of New RT, 18810 Woodfield Road, Gaithersburg, MD 20879, (301) 670–0090.

* * * * *

■ 3. Section 572.121 is amended by revising paragraph (a)(2) introductory text (the table is not amended) to read as follows:

§ 572.121 General description.

(a) * * *

(2) Procedures for Assembly, Disassembly, and Inspection (PADI) of the Hybrid III 6-year-old child crash test dummy (H–III6C), Beta version, dated June 1, 2009, incorporated by reference in § 572.120.

* * * * *

Subpart S—Hybrid III Six-Year-Old Weighted Child Test Dummy

■ 4. Section 572.160 is amended by revising the introductory paragraph of (a)(1), paragraph (a)(1)(iii), paragraph (a)(1)(v), (a)(2), and (a)(3), to read as follows:

§ 572.160 Incorporation by reference.

(a) * * *

(1) A drawings and specifications package entitled, "Parts List and Drawings, Part 572 Subpart S, Hybrid III 6–Year-Old Child Weighted Crash Test Dummy (H–III6CW)," dated June 2009, incorporated by reference in § 572.161 and consisting of:

* * * * *

(iii) Drawing No. 167–2020, Revision A, Spine Box Weight, incorporated by reference in §§ 572.161, 572.164, and 572.165 as part of a complete dummy assembly;

* * * * *

(v) Drawing No. 167–3010, Revision A, Lumbar Weight Base, incorporated by reference in §§ 572.161 and 572.165 as part of a complete dummy assembly; and

* * * * *

(2) A procedures manual entitled, "Procedures for Assembly, Disassembly, And Inspection (PADI) of the Part 572 Subpart S, Hybrid III 6–Year-Old Child Weighted Crash Test Dummy (H–III6CW), revised June 2009," incorporated by reference in § 572.161;

(3) The Director of the Federal Register approved the materials incorporated by reference in accordance with 5 U.S.C. 552(a) and 1 CFR part 51. Copies of the materials may be inspected at the Department of Transportation, Docket Operations, Room W12–140, 1200 New Jersey Avenue, SE., Washington, DC 20590, telephone (202) 366–9826, and at the National Archives and Records Administration (NARA), and in electronic format through Regulations.gov. For information on the availability and inspection of this material at NARA, call 202–741–6030, or go to: *http://www.archives.gov/federal_register/code_of_federal_regulations/ibr_locations.html.* For information on the availability and inspection of this material at Regulations.gov, call 1–877–378–5457, or go to: *http://www.regulations.gov.*

* * * * *

■ 5. Section 572.161 is amended by revising paragraph (a)(1) and paragraph (a)(3) introductory text (the table is not amended), to read as follows:

§ 572.161 General description.

(a) * * *

(1) "Parts List and Drawings, Part 572 Subpart S, Hybrid III 6–Year-Old Child Weighted Crash Test Dummy (H–III6CW)," dated June 2009 (incorporated by reference, see § 572.160);

* * * * *

(3) "Procedures for Assembly, Disassembly, And Inspection (PADI) of the Part 572 Subpart S, Hybrid III 6–Year-Old Child Weighted Crash Test Dummy (H–III6CW), revised June 2009" (incorporated by reference, *see* § 572.160).

* * * * *

Issued: November 26, 2010.

David L. Strickland,

Administrator.

[FR Doc. 2010–30357 Filed 12–8–10; 8:45 am]

BILLING CODE 4910–59–P

Proposed Rules

Federal Register
Vol. 75, No. 236
Thursday, December 9, 2010

This section of the FEDERAL REGISTER contains notices to the public of the proposed issuance of rules and regulations. The purpose of these notices is to give interested persons an opportunity to participate in the rule making prior to the adoption of the final rules.

DEPARTMENT OF TRANSPORTATION

Federal Aviation Administration

14 CFR Part 25

[Docket No. NM436; Special Conditions No. 25–10–01–SC]

Special Conditions: Boeing Model 747–8 Airplanes, Systems and Data Networks Security—Isolation or Protection From Unauthorized Passenger Domain Systems Access

AGENCY: Federal Aviation Administration (FAA), DOT.

ACTION: Notice of proposed special conditions.

SUMMARY: This action proposes special conditions for the Boeing Model 747–8 airplane. This airplane will have novel or unusual design features associated with connectivity of the passenger domain computer systems to the airplane critical systems and data networks. The applicable airworthiness regulations do not contain adequate or appropriate safety standards for these design features. These proposed special conditions contain the additional safety standards that the Administrator considers necessary to establish a level of safety equivalent to that established by the existing airworthiness standards.

DATES: Comments must be received on or before January 24, 2011.

ADDRESSES: Comments on this proposal may be mailed in duplicate to: Federal Aviation Administration, Transport Airplane Directorate, *Attention:* Rules Docket (ANM–113), Docket No. NM436, 1601 Lind Avenue, SW., Renton, Washington 98057–3356; or delivered in duplicate to the Transport Airplane Directorate at the above address. All comments must be marked Docket No. NM436. Comments may be inspected in the Rules Docket weekdays, except Federal holidays, between 7:30 a.m. and 4 p.m.

FOR FURTHER INFORMATION CONTACT: Will Struck, FAA, Airplane and Flight Crew Interface Branch, ANM–111, Transport Airplane Directorate, 1601 Lind Avenue, SW., Renton, Washington 98057–3356; telephone (425) 227–2764; facsimile (425) 227–1149.

SUPPLEMENTARY INFORMATION:

Comments Invited

The FAA invites interested persons to participate in this rulemaking by submitting written comments, data, or views. The most helpful comments reference a specific portion of the special conditions, explain the reason for any recommended change, and include supporting data. We ask that you send us two copies of written comments.

We will file in the docket all comments we receive as well as a report summarizing each substantive public contact with FAA personnel concerning these proposed special conditions. The docket is available for public inspection before and after the comment closing date. If you wish to review the docket in person, go to the address in the **ADDRESSES** section of this notice between 7:30 a.m. and 4 p.m., Monday through Friday, except Federal holidays.

We will consider all comments we receive on or before the closing date for comments. We will consider comments filed late if it is possible to do so without incurring expense or delay. We may change the proposed special conditions based on comments we receive.

If you want the FAA to acknowledge receipt of your comments on this proposal, include with your comments a pre-addressed, stamped postcard on which the docket number appears. We will stamp the date on the postcard and mail it back to you.

Background

On November 4, 2005, The Boeing Company, P.O. Box 3707, Seattle, WA 98124, applied for an amendment to Type Certificate Number A20WE to include the new Model 747–8 passenger airplane. The Model 747–8 is a derivative of the 747–400. The Model 747–8 is a four-engine jet transport airplane that will have a maximum takeoff weight of 975,000 pounds and new General Electric GEnx–2B67 engines. The Model 747–8 will have two flight crew and the capacity to carry 660 passengers.

Type Certification Basis

Under the provisions of Title 14, Code of Federal Regulations (14 CFR) 21.17, Boeing must show that the Model 747–8 (hereafter referred to as the 747–8) meets the applicable provisions of part 25, as amended by Amendments 25–1 through 25–117, except for §§ 25.809(a) and 25.812, which will remain at Amendment 25–115. These regulations will be incorporated into Type Certificate No. A20WE after type certification approval of the 747–8.

In addition, the certification basis includes other regulations, special conditions and exemptions that are not relevant to these proposed special conditions. Refer to Type Certificate No. A20WE for a complete description of the certification basis for this model airplane.

If the Administrator finds that the applicable airworthiness regulations (*i.e.,* 14 CFR part 25) do not contain adequate or appropriate safety standards for the 747–8 because of a novel or unusual design feature, special conditions are prescribed under the provisions of § 21.16.

In addition to the applicable airworthiness regulations and special conditions, the 747–8 must comply with the fuel vent and exhaust emission requirements of 14 CFR part 34 and the noise certification requirements of 14 CFR part 36.

Special conditions, as defined in § 11.19, are issued under § 11.38, and become part of the type certification basis under § 21.101.

Special conditions are initially applicable to the model for which they are issued. Should the type certificate for that model be amended later to include any other model that incorporates the same or similar novel or unusual design feature, or should any other model already included on the same type certificate be modified to incorporate the same or similar novel or unusual design feature, the special conditions would also apply to the other model under § 21.101.

Novel or Unusual Design Features

The Boeing Model 747–8 airplane will incorporate the following novel or unusual design features: Digital systems architecture composed of several connected networks. The proposed network architecture would be used for a diverse set of functions, including:

1. Flight-safety related control, communication, and navigation systems (Aircraft Control Domain),

2. Airline business and administrative support (Airline Information Domain),

3. Passenger information and entertainment systems (Passenger Entertainment Domain), and

4. The capability to allow access to or by external network sources.

Discussion

The proposed Model 747–8 integrated network configuration may allow increased connectivity with external network sources and will have more interconnected networks and systems, such as passenger entertainment and information services, than previous 747–8 airplane models. This may allow the exploitation of network security vulnerabilities and increase risks potentially resulting in unsafe conditions for the airplane and its occupants. This potential exploitation of security vulnerabilities may result in intentional or unintentional destruction, disruption, degradation, or exploitation of data and systems critical to the safety and maintenance of the airplane. The existing regulations and guidance material did not anticipate these types of system architectures. Furthermore, 14 CFR regulations and current system safety assessment policy and techniques do not address potential security vulnerabilities which could be exploited by unauthorized access to airplane networks and servers. Therefore, these special conditions and a means of compliance are proposed to ensure that the security (*i.e.,* confidentiality, integrity, and availability) of airplane systems is not compromised by unauthorized wired or wireless electronic connections between airplane systems and networks and the passenger domain.

Applicability

As discussed above, these proposed special conditions are applicable to Boeing Model 747–8 airplanes. Should Boeing apply at a later date for a change to the type certificate to include another model incorporating the same novel or unusual design features, these proposed special conditions would apply to that model as well under the provisions of § 21.101.

Conclusion

This action affects only certain novel or unusual design features of the Boeing Model 747–8 airplane. It is not a rule of general applicability.

List of Subjects in 14 CFR Part 25

Aircraft, Aviation safety, Reporting and recordkeeping requirements.

The authority citation for these Special Conditions is as follows:

Authority: 49 U.S.C. 106(g), 40113, 44701, 44702, 44704.

The Proposed Special Conditions

Accordingly, the Federal Aviation Administration (FAA) proposes the following special condition as part of the type certification basis for the Boeing Model 747–8 airplane.

The design must prevent all inadvertent or malicious changes to, and all adverse impacts upon, all systems, networks, hardware, software, and data in the Aircraft Control Domain and in the Airline Information Domain from all points within the Passenger Information and Entertainment Domain.

Issued in Renton, Washington, on November 30, 2010.

Jeffrey E. Duven,

Acting Manager, Transport Airplane Directorate, Aircraft Certification Service.

[FR Doc. 2010–30993 Filed 12–8–10; 8:45 am]

BILLING CODE 4910–13–P

DEPARTMENT OF TRANSPORTATION

Federal Aviation Administration

14 CFR Part 71

[Docket No. FAA–2010–1180; Airspace Docket No. 10–AWP–15]

Proposed Establishment of Area Navigation (RNAV) Routes; Western United States

AGENCY: Federal Aviation Administration (FAA), DOT.

ACTION: Notice of proposed rulemaking.

SUMMARY: This action proposes to establish seven High Altitude Area Navigation (RNAV) routes in the Western United States (U.S.). These new routes would provide pilots and air traffic controllers with efficient direct routes enhancing safety and improving the efficient use of the National Airspace System (NAS).

DATES: Comments must be received on or before January 24, 2011.

ADDRESSES: Send comments on the proposal to the U.S. Department of Transportation, Docket Operations, M–30, 1200 New Jersey Avenue, SE., West Building Ground Floor, Room W12–140, Washington, DC 20590–0001; *telephone:* (202) 366–9826. You must identify FAA Docket No. FAA–2010–1180 and Airspace Docket No. 10–AWP–15 at the beginning of your comments. You may also submit comments through the Internet at *http://www.regulations.gov.*

FOR FURTHER INFORMATION CONTACT: Ken McElroy, Airspace Regulation and ATC Procedures Group, Office of Mission Support Services, Federal Aviation Administration, 800 Independence Avenue, SW., Washington, DC 20591; *telephone:* (202) 267–8783.

SUPPLEMENTARY INFORMATION:

Comments Invited

Interested parties are invited to participate in this proposed rulemaking by submitting such written data, views, or arguments as they may desire. Comments that provide the factual basis supporting the views and suggestions presented are particularly helpful in developing reasoned regulatory decisions on the proposal. Comments are specifically invited on the overall regulatory, aeronautical, economic, environmental, and energy-related aspects of the proposal.

Communications should identify both docket numbers (FAA Docket No. FAA–2010–1180 and Airspace Docket No. 10–AWP–15) and be submitted in triplicate to the Docket Management Facility (*see* **ADDRESSES** section for address and phone number). You may also submit comments through the Internet at *http://www.regulations.gov.*

Commenters wishing the FAA to acknowledge receipt of their comments on this action must submit with those comments a self-addressed, stamped postcard on which the following statement is made: "Comments to FAA Docket No. FAA–2010–1180 and Airspace Docket No. 10–AWP–15." The postcard will be date/time stamped and returned to the commenter.

All communications received on or before the specified closing date for comments will be considered before taking action on the proposed rule. The proposal contained in this action may be changed in light of comments received. All comments submitted will be available for examination in the public docket both before and after the closing date for comments. A report summarizing each substantive public contact with FAA personnel concerned with this rulemaking will be filed in the docket.

Availability of NPRMs

An electronic copy of this document may be downloaded through the Internet at *http://www.regulations.gov.* Recently published rulemaking documents can also be accessed through the FAA's Web page at *http://www.faa.gov/air_traffic/publications/airspace_amendments/.*

You may review the public docket containing the proposal, any comments received, and any final disposition in person in the Dockets Office (*see* **ADDRESSES** section for address and phone number) between 9 a.m. and 5 p.m., Monday through Friday, except Federal holidays. An informal docket may also be examined during normal business hours at the office of the Western Service Center, Federal Aviation Administration, 1601 Lind Ave., SW., Renton, WA 98057.

Persons interested in being placed on a mailing list for future NPRMs should contact the FAA's Office of Rulemaking, (202) 267–9677, for a copy of Advisory Circular No. 11–2A, Notice of Proposed Rulemaking Distribution System, which describes the application procedure.

The Proposal

The FAA is proposing an amendment to Title 14 Code of Federal Regulations (14 CFR) part 71 to establish seven RNAV Q-routes in the Western United States. The RNAV routes described in this NPRM would enhance safety, and facilitate more flexible and efficient use of the navigable airspace for en route Instrument Flight Rules (IFR) operations within the NAS. Specifically these proposed routes would improve departure flow from the San Francisco/Oakland, CA, Terminal area by providing additional parallel departure routings and improve arrival flow from Salt Lake ARTCC to Reno, NV, and Sacramento, CA.

The High Altitude RNAV Routes are published in paragraph 2006 in FAA Order 7400.9U, Airspace Designations and Reporting Points, dated August 18, 2010, and effective September 15, 2010, which is incorporated by reference in 14 CFR 71.1. The airspace designations listed in this document would be published subsequently in the Order.

The FAA has determined that this proposed regulation only involves an established body of technical regulations for which frequent and routine amendments are necessary to keep them operationally current. Therefore, this proposed regulation: (1) Is not a "significant regulatory action" under Executive Order 12866; (2) is not a "significant rule" under Department of Transportation (DOT) Regulatory Policies and Procedures (44 FR 11034; February 26, 1979); and (3) does not warrant preparation of a regulatory evaluation as the anticipated impact is so minimal. Since this is a routine matter that will only affect air traffic procedures and air navigation, it is certified that this proposed rule, when promulgated, will not have a significant economic impact on a substantial number of small entities under the criteria of the Regulatory Flexibility Act.

The FAA's authority to issue rules regarding aviation safety is found in title 49 of the United States Code. Subtitle I, section 106 describes the authority of the FAA Administrator. Subtitle VII, Aviation Programs, describes in more detail the scope of the agency's authority.

This rulemaking is promulgated under the authority described in subtitle VII, part A, subpart I, section 40103. Under that section, the FAA is charged with prescribing regulations to assign the use of the airspace necessary to ensure the safety of aircraft and the efficient use of airspace. This regulation is within the scope of that authority as it proposes to establish RNAV routes in the Western United States.

Environmental Review

This proposal will be subject to an environmental analysis in accordance with FAA Order 1050.1E, "Environmental Impacts: Policies and Procedures," prior to any FAA final regulatory action.

List of Subjects in 14 CFR Part 71

Airspace, Incorporation by reference, Navigation (air).

The Proposed Amendment

In consideration of the foregoing, the Federal Aviation Administration proposes to amend 14 CFR part 71 as follows:

PART 71—DESIGNATION OF CLASS A, B, C, D, AND E AIRSPACE AREAS; AIR TRAFFIC SERVICE ROUTES; AND REPORTING POINTS

1. The authority citation for part 71 continues to read as follows:

Authority: 49 U.S.C. 106(g), 40103, 40113, 40120; E.O. 10854, 24 FR 9565, 3 CFR, 1959–1963 Comp., p. 389.

§ 71.1 [Amended]

2. The incorporation by reference in 14 CFR 71.1 of FAA Order 7400.9U, Airspace Designations and Reporting Points, dated August 18, 2010, and effective September 15, 2010, is amended as follows:

Paragraph 2006 United States Area Navigation Routes.

* * * * *

Q–120 SAC to RWF [New]

SAC	VORTAC	(Lat. 38°26′37″ N., long. 121°33′06″ W.)
ZORUN	WP	(Lat. 39°59′00″ N., long. 118°55′00″ W.)
GALLI	WP	(Lat. 40°19′10″ N., long. 118°07′18″ W.)
BPI	VOR/DME	(Lat. 42°34′46″ N., long. 110°06′33″ W.)
FOSIG	WP	(Lat. 43°49′03″ N., long. 101°25′18″ W.)
RWF	VOR/DME	(Lat. 44°28′02″ N., long. 095°07′42″ W.)

* * * * *

Q–122 MOGEE to FOD [New]

MOGEE	WP	(Lat. 38°20′10″ N., long. 121°23′23″ W.)
MACUS	WP	(Lat. 39°53′00″ N., long. 118°48′00″ W.)
MCORD	WP	(Lat. 40°12′00″ N., long. 118°01′00″ W.)
LCU	VORTAC	(Lat. 41°21′47″ N., long. 113°50′26″ W.)
BEARR	FIX	(Lat. 41°31′51″ N., long. 112°29′18″ W.)
KURSE	WP	(Lat. 42°04′30″ N., long. 105°09′36″ W.)
ONL	VORTAC	(Lat. 42°28′14″ N., long. 098°41′13″ W.)
FOD	VORTAC	(Lat. 42°36′40″ N., long. 094°17′41″ W.)

* * * * *

Q–124 MOGEE to WAATS [New]

MOGEE	WP	(Lat. 38°20′10″ N., long. 121°23′23″ W.)
MACUS	WP	(Lat. 39°53′00″ N., long. 118°48′00″ W.)
MCORD	WP	(Lat. 40°12′00″ N., long. 118°01′00″ W.)
SLOWN	WP	(Lat. 40°34′00″ N., long. 116°24′00″ W.)

FASTE	WP	(Lat. 40°42′00″ N., long. 114°30′00″ W.)
BVL	VORTAC	(Lat. 40°43′34″ N., long. 113°45′27″ W.)
WAATS	FIX	(Lat. 40°43′10″ N., long. 112°31′48″ W.)

* * * * *

Q–126 TIPRE to EKR [New]

TIPRE	WP	(Lat. 38°12′21″ N., long. 121°02′09″ W.)
INSLO	WP	(Lat. 38°40′45″ N., long. 117°17′53″ W.)
GAROT	WP	(Lat. 39°18′00″ N., long. 113°15′00″ W.)
EKR	VOR/DME	(Lat. 40°04′03″ N., long. 107°55′30″ W.)

* * * * *

Q–128 LIN to MEM [New]

LIN	VORTAC	(Lat. 38°04′29″ N., long. 121°00′14″ W.)
JSICA	WP	(Lat. 38°31′14″ N., long. 117°17′13″ W.)
EDLES	FIX	(Lat. 38°40′40″ N., long. 109°56′27″ W.)
FLOOD	FIX	(Lat. 38°20′24″ N., long. 105°05′38″ W.)
ZAROS	WP	(Lat. 37°59′22″ N., long. 102°20′22″ W.)
BVO	VOR/DME	(Lat. 36°50′03″ N., long. 096°01′06″ W.)
RZC	VORTAC	(Lat. 36°14′47″ N., long. 094°07′17″ W.)
PAMMO	WP	(Lat. 35°35′04″ N., long. 091°49′21″ W.)
MEM	VORTAC	(Lat. 35°00′54″ N., long. 089°58′60″ W.)

* * * * *

Q–130 LIN to PNH [New]

LIN	VORTAC	(Lat. 38°04′29″ N., long. 121°00′14″ W.)
JSICA	WP	(Lat. 38°31′14″ N., long. 117°17′13″ W.)
REANA	WP	(Lat. 38°24′00″ N., long. 114°20′00″ W.)
MRRNY	WP	(Lat. 37°49′42″ N., long. 111°59′60″ W.)
RSK	VORTAC	(Lat. 36°44′54″ N., long. 108°05′56″ W.)
DIXAN	FIX	(Lat. 36°16′51″ N., long. 105°57′20″ W.)
MIRME	WP	(Lat. 35°47′01″ N., long. 103°50′32″ W.)
PNH	VORTAC	(Lat. 35°14′06″ N., long. 101°41′56″ W.)

* * * * *

Q–132 WEBGO to MAGPY [New]

WEBGO	WP	(Lat. 39°28′00″ N., long. 120°21′00″ W.)
ANAHO	FIX	(Lat. 39°57′40″ N., long. 119°24′56″ W.)
MYBAD	WP	(Lat. 40°23′16″ N., long. 118°22′23″ W.)
ZERAM	WP	(Lat. 40°28′00″ N., long. 118°07′00″ W.)
MAGPY	WP	(Lat. 40°51′27″ N., long. 116°12′09″ W.)

Issued in Washington, DC, December 2, 2010.

Edith V. Parish,

Manager, Airspace Regulation and ATC Procedures Group.

[FR Doc. 2010–30999 Filed 12–8–10; 8:45 am]

BILLING CODE 4910–13–P

DEPARTMENT OF TRANSPORTATION

Federal Aviation Administration

14 CFR Part 71

[Docket No. FAA–2010–0961; Airspace Docket No. 10–ANM–12]

Proposed Modification of Class E Airspace; Bryce Canyon, UT

AGENCY: Federal Aviation Administration (FAA), DOT.

ACTION: Notice of proposed rulemaking (NPRM).

SUMMARY: This action proposes to modify Class E airspace at Bryce Canyon, UT to accommodate Area Navigation (RNAV) Global Positioning System (GPS) Standard Instrument Approach Procedures at Bryce Canyon Airport. The FAA is proposing this action to enhance the safety and management of Instrument Flight Rules (IFR) operations at Bryce Canyon Airport.

DATES: Comments must be received on or before January 24, 2011.

ADDRESSES: Send comments on this proposal to the U.S. Department of Transportation, Docket Operations, M–30, West Building Ground Floor, Room W12–140, 1200 New Jersey Avenue, SE., Washington, DC 20590; telephone (202) 366–9826. You must identify FAA Docket No. FAA–2010–0961; Airspace Docket No. 10–ANM–12, at the beginning of your comments. You may also submit comments through the Internet at *http://www.regulations.gov*.

FOR FURTHER INFORMATION CONTACT: Eldon Taylor, Federal Aviation Administration, Operations Support Group, Western Service Center, 1601 Lind Avenue, SW., Renton, WA 98057; telephone (425) 203–4537.

SUPPLEMENTARY INFORMATION:

Comments Invited

Interested parties are invited to participate in this proposed rulemaking by submitting such written data, views, or arguments, as they may desire. Comments that provide the factual basis supporting the views and suggestions presented are particularly helpful in developing reasoned regulatory decisions on the proposal. Comments are specifically invited on the overall regulatory, aeronautical, economic, environmental, and energy-related aspects of the proposal.

Communications should identify both docket numbers (FAA Docket No. FAA 2010–0961 and Airspace Docket No. 10–ANM–12) and be submitted in triplicate to the Docket Management System (*see* **ADDRESSES** section for address and phone number). You may also submit comments through the Internet at *http://www.regulations.gov*.

Commenters wishing the FAA to acknowledge receipt of their comments on this action must submit with those comments a self-addressed stamped postcard on which the following statement is made: "Comments to FAA Docket No. FAA–2010–0961 and Airspace Docket No. 10–ANM–12". The postcard will be date/time stamped and returned to the commenter.

All communications received on or before the specified closing date for comments will be considered before taking action on the proposed rule. The proposal contained in this action may be changed in light of comments received. All comments submitted will be available for examination in the public docket both before and after the closing date for comments. A report summarizing each substantive public contact with FAA personnel concerned with this rulemaking will be filed in the docket.

Availability of NPRMs

An electronic copy of this document may be downloaded through the Internet at *http://www.regulations.gov*. Recently published rulemaking documents can also be accessed through the FAA's Web page at *http://www.faa.gov/airports_airtraffic/air_traffic/publications/airspace_amendments/*.

You may review the public docket containing the proposal, any comments received, and any final disposition in person in the Dockets Office (see the **ADDRESSES** section for the address and phone number) between 9 a.m. and 5 p.m., Monday through Friday, except Federal holidays. An informal docket may also be examined during normal business hours at the Northwest Mountain Regional Office of the Federal Aviation Administration, Air Traffic Organization, Western Service Center, Operations Support Group, 1601 Lind Avenue, SW., Renton, WA 98057.

Persons interested in being placed on a mailing list for future NPRMs should contact the FAA's Office of Rulemaking, (202) 267–9677, for a copy of Advisory Circular No. 11–2A, Notice of Proposed Rulemaking Distribution System, which describes the application procedure.

The Proposal

The FAA is proposing an amendment to title 14 Code of Federal Regulations (14 CFR) part 71 by modifying Class E airspace extending upward from 700 feet above the surface at Bryce Canyon Airport, Bryce Canyon, UT. Controlled airspace is necessary to accommodate aircraft using the RNAV (GPS) Standard Instrument Approach Procedures at Bryce Canyon Airport, Bryce Canyon, UT. This action would enhance the safety and management of aircraft operations at the airport.

Class E airspace designations are published in paragraph 6005, of FAA Order 7400.9U, dated August 18, 2010, and effective September 15, 2010, which is incorporated by reference in 14 CFR 71.1. The Class E airspace designation listed in this document will be published subsequently in this Order.

The FAA has determined this proposed regulation only involves an established body of technical regulations for which frequent and routine amendments are necessary to keep them operationally current. Therefore, this proposed regulation; (1) is not a "significant regulatory action" under Executive Order 12866; (2) is not a "significant rule" under DOT Regulatory Policies and Procedures (44 FR 11034; February 26, 1979); and (3) does not warrant preparation of a regulatory evaluation as the anticipated impact is so minimal. Since this is a routine matter that will only affect air traffic procedures and air navigation, it is certified this proposed rule, when promulgated, would not have a significant economic impact on a substantial number of small entities under the criteria of the Regulatory Flexibility Act.

The FAA's authority to issue rules regarding aviation safety is found in Title 49 of the U.S. Code. Subtitle 1, section 106, describes the authority for the FAA Administrator. Subtitle VII, Aviation Programs, describes in more detail the scope of the agency's authority. This rulemaking is promulgated under the authority described in subtitle VII, part A, subpart I, section 40103. Under that section, the FAA is charged with prescribing regulations to assign the use of the airspace necessary to ensure the safety of aircraft and the efficient use of airspace. This regulation is within the scope of that authority as it modifies controlled airspace at Bryce Canyon Airport, Bryce Canyon, UT.

List of Subjects in 14 CFR Part 71

Airspace, Incorporation by reference, Navigation (air).

The Proposed Amendment

Accordingly, pursuant to the authority delegated to me, the Federal Aviation Administration proposes to amend 14 CFR part 71 as follows:

PART 71—DESIGNATION OF CLASS A, B, C, D AND E AIRSPACE AREAS; AIR TRAFFIC SERVICE ROUTES; AND REPORTING POINTS

1. The authority citation for 14 CFR part 71 continues to read as follows:

Authority: 49 U.S.C. 106(g), 40103, 40113, 40120; E.O. 10854, 24 FR 9565, 3 CFR, 1959–1963 Comp., p. 389.

§ 71.1 [Amended]

2. The incorporation by reference in 14 CFR 71.1 of the FAA Order 7400.9U, Airspace Designations and Reporting Points, dated August 18, 2010, and effective September 15, 2010 is amended as follows:

Paragraph 6005 Class E airspace areas extending upward from 700 feet or more above the surface of the earth.

* * * * *

ANM UT E5 Bryce Canyon, UT [Modified]

Bryce Canyon Airport, UT
(Lat. 37°42′23″ N., long. 112°08′45″ W.)

That airspace extending upward from 700 feet above the surface within 8 miles each side of the 047° and 227° bearing from the airport, extending 18 miles northeast and 15.9 miles southwest of the airport. That airspace extending upward from 1,200 feet above the surface bounded by a line beginning at lat. 38°21′00″ N., long. 112°34′00″ W.; to lat. 38°21′00″ N., long. 112°24′00″ W.; to lat. 38°12′00″ N., long. 112°15′00″ W.; to lat. 38°20′00″ N., long. 111°56′00″ W.; to lat. 38°18′00″ N., long. 111°41′00″ W.; to lat. 38°00′00″ N., long. 111°43′00″ W.; to lat. 37°45′00″ N., long. 111°02′00″ W.; to lat. 37°17′00″ N., long. 111°18′00″ W.; to lat. 37°19′00″ N., long. 111°48′00″ W.; to lat. 37°22′00″ N., long. 112°14′00″ W.; to lat. 37°13′00″ N., long. 112°33′00″ W.; to lat. 37°14′00″ N., long. 112°39′00″ W.; to lat. 37°29′00″ N., long. 112°42′00″ W.; to lat. 37°41′00″ N., long. 112°53′00″ W.; thence to point of origin, and excluding that airspace within Federal airways.

Issued in Seattle, Washington, on December 1, 2010.

John Warner,

Manager, Operations Support Group, Western Service Center.

[FR Doc. 2010–30989 Filed 12–8–10; 8:45 am]

BILLING CODE 4910–13–P

DEPARTMENT OF TRANSPORTATION

Federal Aviation Administration

14 CFR Part 71

[Docket No. FAA–2010–1179; Airspace Docket No. 10–ANM–9]

RIN 2120–AA66

Proposed Establishment of Area Navigation (RNAV) Routes; Western United States

AGENCY: Federal Aviation Administration, DOT.

ACTION: Notice of proposed rulemaking (NPRM).

SUMMARY: This action proposes to establish six High Altitude Area Navigation (RNAV) routes in the Western United States (U.S.). These new routes would provide pilots and air traffic controllers with efficient direct routes enhancing safety and improving the efficient use of the National Airspace System (NAS).

DATES: Comments must be received on or before January 24, 2011.

ADDRESSES: Send comments on the proposal to the U.S. Department of Transportation, Docket Operations, M–30, 1200 New Jersey Avenue, SE., West Building Ground Floor, Room W12–140, Washington, DC 20590–0001; *telephone:* (202) 366–9826. You must identify FAA Docket No. FAA–2010–1179 and Airspace Docket No. 10–ANM–9 at the beginning of your comments. You may also submit comments through the Internet at *http://www.regulations.gov.*

FOR FURTHER INFORMATION CONTACT: Ken McElroy, Airspace Regulation and ATC Procedures Group, Office of Mission Support Services, Federal Aviation Administration, 800 Independence Avenue, SW., Washington, DC 20591; telephone: (202) 267–8783.

SUPPLEMENTARY INFORMATION:

Comments Invited

Interested parties are invited to participate in this proposed rulemaking by submitting such written data, views, or arguments as they may desire. Comments that provide the factual basis supporting the views and suggestions presented are particularly helpful in developing reasoned regulatory decisions on the proposal. Comments are specifically invited on the overall regulatory, aeronautical, economic, environmental, and energy-related aspects of the proposal.

Communications should identify both docket numbers (FAA Docket No. FAA–2010–1179 and Airspace Docket No. 10–ANM–9) and be submitted in triplicate to the Docket Management Facility (*see* **ADDRESSES** section for address and phone number). You may also submit comments through the Internet at *http://www.regulations.gov.*

Commenters wishing the FAA to acknowledge receipt of their comments on this action must submit with those comments a self-addressed, stamped postcard on which the following statement is made: "Comments to FAA Docket No. FAA–2010–1179 and Airspace Docket No. 10–ANM–9." The postcard will be date/time stamped and returned to the commenter.

All communications received on or before the specified closing date for comments will be considered before taking action on the proposed rule. The proposal contained in this action may be changed in light of comments received. All comments submitted will be available for examination in the public docket both before and after the closing date for comments. A report summarizing each substantive public contact with FAA personnel concerned with this rulemaking will be filed in the docket.

Availability of NPRMs

An electronic copy of this document may be downloaded through the Internet at *http://www.regulations.gov.* Recently published rulemaking documents can also be accessed through the FAA's Web page at *http://www.faa.gov/air_traffic/publications/airspace_amendments/.*

You may review the public docket containing the proposal, any comments received, and any final disposition in person in the Dockets Office (*see* **ADDRESSES** section for address and phone number) between 9 a.m. and 5 p.m., Monday through Friday, except Federal holidays. An informal docket may also be examined during normal business hours at the office of the Western Service Center, Federal Aviation Administration, 1601 Lind Ave., SW., Renton, WA 98057.

Persons interested in being placed on a mailing list for future NPRMs should contact the FAA's Office of Rulemaking, (202) 267–9677, for a copy of Advisory Circular No. 11–2A, Notice of Proposed Rulemaking Distribution System, which describes the application procedure.

The Proposal

The FAA is proposing an amendment to Title 14 Code of Federal Regulations (14 CFR) part 71 to establish six RNAV Q-routes in the Western United States. The RNAV routes described in this NPRM would enhance safety, and facilitate more flexible and efficient use of the navigable airspace for en route Instrument Flight Rules (IFR) operations within the NAS. Specifically, these proposed routes would be designed to improve arrival flow from the Denver, CO, Terminal area to the San Francisco/Oakland, CA, Terminal area and improve arrival flow from and through Salt Lake ARTCC to the San Francisco/Oakland, CA, Terminal area.

High Altitude RNAV Routes are published in paragraph 2006 in FAA Order 7400.9U, Airspace Designations and Reporting Points, dated August 18, 2010, and effective September 15, 2010, which is incorporated by reference in 14 CFR 71.1. The airspace designations listed in this document would be published subsequently in the Order.

The FAA has determined that this proposed regulation only involves an established body of technical regulations for which frequent and routine amendments are necessary to keep them operationally current. Therefore, this proposed regulation: (1) Is not a "significant regulatory action" under Executive Order 12866; (2) is not a "significant rule" under Department of Transportation (DOT) Regulatory Policies and Procedures (44 FR 11034; February 26, 1979); and (3) does not warrant preparation of a regulatory evaluation as the anticipated impact is so minimal. Since this is a routine matter that will only affect air traffic procedures and air navigation, it is certified that this proposed rule, when promulgated, will not have a significant economic impact on a substantial number of small entities under the criteria of the Regulatory Flexibility Act.

The FAA's authority to issue rules regarding aviation safety is found in Title 49 of the United States Code. Subtitle I, Section 106 describes the authority of the FAA Administrator. Subtitle VII, Aviation Programs, describes in more detail the scope of the agency's authority.

This rulemaking is promulgated under the authority described in Subtitle VII, Part A, Subpart I, Section 40103. Under that section, the FAA is charged with prescribing regulations to assign the use of the airspace necessary to ensure the safety of aircraft and the efficient use of airspace. This regulation is within the scope of that authority as it proposes to establish RNAV routes in the Western United States.

Environmental Review

This proposal will be subject to an environmental analysis in accordance with FAA Order 1050.1E, "Environmental Impacts: Policies and Procedures,'' prior to any FAA final regulatory action.

List of Subjects in 14 CFR Part 71

Airspace, Incorporation by reference, Navigation (air).

The Proposed Amendment

In consideration of the foregoing, the Federal Aviation Administration proposes to amend 14 CFR part 71 as follows:

PART 71—DESIGNATION OF CLASS A, B, C, D, AND E AIRSPACE AREAS; AIR TRAFFIC SERVICE ROUTES; AND REPORTING POINTS

1. The authority citation for part 71 continues to read as follows:

Authority: 49 U.S.C. 106(g), 40103, 40113, 40120; E.O. 10854, 24 FR 9565, 3 CFR, 1959–1963 Comp., p. 389.

§ 71.1 [Amended]

2. The incorporation by reference in 14 CFR 71.1 of FAA Order 7400.9U, Airspace Designations and Reporting Points, dated August 18, 2010, and effective September 15, 2010, is amended as follows:

Paragraph 2006 United States Area Navigation Routes.

* * * * *

Q–134 DUGLE to VOAXA [New]

DUGLE	FIX	(Lat. 37°51′54″ N., long. 120°40′04″ W.)
TATOO	WP	(Lat. 38°19′42″ N., long. 117°16′50″ W.)
JULIK	FIX	(Lat. 39°09′11″ N., long. 112°31′33″ W.)
HERSH	WP	(Lat. 39°30′46″ N., long. 109°59′07″ W.)
VOAXA	FI	(Lat. 39°47′18″ N., long. 106°31′58″ W.)

Q–136 OAL to VOAXA [New]

OAL	VORTAC	(Lat. 38°00′12″ N., long. 117°46′14″ W.)
RUMPS	WP	(Lat. 38°07′10″ N., long. 117°16′15″ W.)
KATTS	WP	(Lat. 38°20′00″ N., long. 116°20′00″ W.)
WEEMN	WP	(Lat. 39°21′57″ N., long. 109°58′03″ W.)
VOAXA	FIX	(Lat. 39°47′18″ N., long. 106°31′58″ W.)

Q–138 ILA to ABR [New]

ILA	VORTAC	(Lat. 39°04′16″ N., long. 122°01′38″ W.)
FIMUV	WP	(Lat. 39°49′05″ N., long. 120°11′17″ W.)
JENSA	WP	(Lat. 40°11′36″ N., long. 119°13′27″ W.)
PUHGI	WP	(Lat. 40°47′38″ N., long. 117°45′32″ W.)
ROOHZ	WP	(Lat. 41°14′12″ N., long. 116°12′58″ W.)
PARZZ	WP	(Lat. 41°36′15″ N., long. 115°02′10″ W.)
UROCO	WP	(Lat. 42°51′52″ N., long. 110°50′25″ W.)
RICCO	WP	(Lat. 43°48′29″ N., long. 107°02′30″ W.)
MOTLY	WP	(Lat. 44°45′50″ N., long. 102°25′43″ W.)
ABR	VOR/DME	(Lat. 45°25′02″ N., long. 098°22′07″ W.)

Q–121 PARZZ to TOUGH [New]

PARZZ	WP	(Lat. 41°36′15″ N., long. 115°02′10″ W.)
PIH	VORTAC	(Lat. 42°52′13″ N., long. 112°39′08″ W.)
TOUGH	WP	(Lat. 46°13′58″ N., long. 105°12′52″ W.)

Q–123 PARZZ to COKEE [New]

PARZZ	WP	(Lat. 41°36′15″ N., long. 115°02′10″ W.)
COKEE	WP	(Lat. 47°22′25″ N., long. 106°51′49″ W.)

Q–125 PARZZ to WLLES [New]

PARZZ	WP	(Lat. 41°36′15″ N., long. 115°02′10″ W.)
WLLES	WP	(Lat. 48°57′33″ N., long. 110°08′18″ W.)

Issued in Washington, DC, December 2, 2010.

Edith V. Parish,

Manager, Airspace Regulation and ATC Procedures Group.

[FR Doc. 2010–31002 Filed 12–8–10; 8:45 am]

BILLING CODE 4910–13–P

DEPARTMENT OF COMMERCE

Bureau of Industry and Security

15 CFR Parts 732, 738, 740, 743, 758, and 774

[Docket No. 100923470–0569–01]

RIN 0694–AF03

Export Control Modernization: Strategic Trade Authorization License Exception

AGENCY: Bureau of Industry and Security, Commerce.

ACTION: Proposed rule.

SUMMARY: This proposed rule would add a new license exception to the Export Administration Regulations (EAR). The exception would allow exports, reexports and transfers (in-country) of specified items to destinations that pose little risk of unauthorized use of those items. To provide assurance against diversion to unauthorized destinations, transactions under this license exception would be subject to notification, destination control statement and consignee statement requirements. This proposed rule is part of the Administration's Export Control Reform Initiative undertaken as a result of the fundamental review of the U.S. export control system announced by the President in August 2009.

DATES: Comments must be received by BIS no later than February 7, 2011.

ADDRESSES: Comments on this rule may be submitted to the Federal rulemaking portal (*http://www.regulations.gov*). The regulations.gov ID for this rule is: BIS–2010–0038. Comments may also be

submitted via e-mail to *publiccomments.bis.doc.gov* or on paper to Regulatory Policy Division, Bureau of Industry and Security, Room 2705, U.S. Department of Commerce, Washington, DC 20230. Please refer to RIN 0694–AF03 in all comments and in the subject line of e-mail comments.

FOR FURTHER INFORMATION CONTACT: William Arvin, Regulatory Policy Division, Bureau of Industry and Security, *warvin@bis.doc.gov* or 202–482–2440.

SUPPLEMENTARY INFORMATION:

Background

In August 2009, the President directed a broad-based interagency review of the U.S. export control system with the goal of strengthening national security and the competitiveness of key U.S. manufacturing and technology sectors by focusing on current threats and adapting to the changing economic and technological landscape. The review determined that the current export control system is overly complicated, contains too many redundancies, and, in trying to protect too much, diminishes our ability to focus our efforts on the most critical national security priorities. *See, e.g.,* October 30, 2010 press release by the White House, Office of the Press Secretary at *http://www.whitehouse.gov/the-press-office/2010/08/30/president-obama-lays-foundation-a-new-export-control-system-strengthen-n.*

As a result, the Administration has begun the Export Control Reform Initiative, which will fundamentally reform the U.S. export control system. The Export Control Reform Initiative is designed to enhance U.S. national security and strengthen the United States' ability to counter threats such as the proliferation of weapons of mass destruction. The Administration determined that fundamental reform is needed in each of the export control system's four component areas with transformation to a single control list, a single licensing agency, a single information technology system, and a single primary enforcement coordination agency. The Administration is implementing the reform in three phases. The first two phases build toward the third phase of the single control list, licensing agency, information technology system, and enforcement coordination agency. Under this approach, new criteria for determining what items need to be controlled and a common set of policies for determining when an export license is required will be implemented. The control list criteria will be based on transparent rules, which will reduce the uncertainty faced by our allies, U.S. industry, and its foreign partners, and will allow the government to erect higher walls around the most sensitive items in order to enhance national security.

A New License Exception To Begin a More Precise Focus

This proposed rule would implement one part of the reform initiative. It would revise licensing policies by creating a new license exception for transactions involving certain items subject to the Export Administration Regulations (EAR) to certain destinations. The new License Exception Strategic Trade Authorization (STA) would be in § 740.20 of the EAR.

The new license exception would authorize exports, reexports and transfers (in-country) to destinations that pose little risk of unauthorized uses, and for which U.S. national security and foreign policy justify authorizing transactions without the delay and expense of obtaining an export license. To provide safeguards against possible reexports to destinations that are not authorized under License Exception STA, where there is a greater risk of diversion to unauthorized end-uses, the license exception would also impose certain notification, destination control statement and consignee statement requirements. Use of this license exception would be optional. Parties would be free to use other license exceptions that would authorize a planned transaction or to apply for a license if they prefer to do so.

This license exception would be a step in the President's Export Control Reform Initiative. With its associated specific safeguards, this license exception would further focus export controls on the most critical national security priorities. The Administration will continue to work on other parts of the initiative, including implementing the control list criteria and transitioning the Commerce Control List (CCL) into a tiered structure to further target dual-use controls on the most sensitive items.

As described in the Notice of Inquiry the Department of Commerce entitled "Request for Public Comments on How the Descriptions of Items on the Commerce Control List Could be (1) More Clear and 'Positive' and (2) 'Tiered' based on Their (a) Significance and (b) Availability Outside of Certain Countries" issued simultaneously with this proposed rule, the Administration is continuing its review of items on the CCL to determine which paragraphs or subparagraphs within each Export Control Classification Number (ECCN) should be identified as within the scope of Tier 1, Tier 2, or Tier 3. Any items the Administration ultimately determines to be within the scope of Tier 1—*i.e.,* items that are critical to maintaining a military or intelligence advantage for the United States and almost exclusively available from the United States—will not be within the scope of License Exception STA. In particular, the Administration is focusing on whether items within the scope of the following ECCNs would, in whole or in part, not be eligible for License Exception STA: 0A919, 1A002, 3A001, 3A002, 3A003, 3A201, 3A228, 3A229, 3A232, 4A001, 4A003, 5A001, 6A001, 6A002, 6A003, 6A004, 6A005, 6A006, 7A001, 7A002, 7A003, 7A004, 7A006, 8A001, 8A018, 9A001, 9A004, 9A012 and 9A018. The Administration's focus on these ECCNs includes a focus on whether the technology controls related to such items and other items, such as in ECCNs 9E003, 6E001 and 6E002, meet, in whole or in part, the Tier 1 criteria.

Specific License Exception Provisions

Scope

The license exception would apply only to Commerce Control List-based license requirements. Transactions in which a license is required because of an end-use—such as a proliferation end-use described in part 744 of the EAR or a proscribed end-user (such as a party on the Entity List in part 744 of the EAR)—or because the destination is subject to an embargo or special restrictions in part 746 of the EAR, would not be eligible for License Exception STA.

Items on the Commerce Control List that are subject to the short supply (SS), surreptitious listening (SL), missile technology (MT) or chemical weapons (CW) reasons for control would not be eligible for License Exception STA because of various requirements imposed by statutes, treaties or U.S. implementation of international commitments. Items in ECCNs 0A981 and 0A983 also would not be eligible. Those two ECCNs apply to equipment designed for the execution of human beings and specially designed implements of torture. The human rights concerns associated with those items are sufficiently great to justify precluding use of License Exception STA. License Exception STA would also not affect the requirements for License Exception ENC in § 740.17 of the EAR.

License Exception STA

This license exception would encompass three different authorizations, based on the reason(s) for control underlying the license requirements that would apply to the item in the particular transaction at issue, the destination, the sensitivity of the item and the end-use. One authorization would allow items subject to any (or all) of seven reasons for control to go to 37 destinations. Another authorization would allow less sensitive items subject to only national security reasons for control to go to two additional destinations. The third authorization would allow less sensitive items subject to only national security reasons for control to go to 125 additional destinations for civil end-uses. National security-controlled items that are ineligible for the last two authorizations would be identified by the new "STA exclusion paragraphs" in the "License Exceptions" sections of 50 ECCN entries on the Commerce Control List. Thus, the STA exclusion serves the opposite function of a typical list-based license exception paragraph, such as those setting forth license exceptions LVS (§ 740.3) and GBS (§ 740.4), which identifies items that are eligible for a license exception.

Authorization for Items Controlled for Multiple Reasons to 37 Countries

If the only reason(s) for control that impose(s) a license requirement on the *transaction* is (are) national security (NS); chemical or biological weapons (CB); nuclear nonproliferation (NP); regional stability (RS); encryption items (EI); crime control (CC) (but not ECCNs 0A981, 0A982, 0A983, 0A985 or 0E982); or significant items (SI), exports, reexports and transfers (in-country) to 37 destinations would be authorized. Two of the crime control ECCNs excluded from this authorization (0A981 and 0A983) involve human rights concerns of sufficient magnitude to justify exclusion. The other three excluded crime control ECCNs would continue to require a license to all destinations other than Canada.

Authorization for Less Sensitive National Security Items to 2 Additional Countries

If the only reason for control that imposes a license requirement on the *transaction* is national security (NS) and the item is not designated in the STA sensitive items exclusion paragraph in its ECCN, two destinations in addition to the 37 noted above would be authorized. The STA exclusion paragraphs closely track the Sensitive List of the Wassenaar Arrangement on Export Controls Conventional Arms and Dual-Use Goods and Technologies (Wassenaar Arrangement). This rule would add such paragraphs to 50 ECCNs.

Authorization for Less Sensitive National Security Items for Civil End-uses in 125 Additional Countries

If the only reason for control that imposes a license requirement on the *transaction* is national security (NS), the item that is the subject of the transaction is not designated by the STA exclusion paragraph in its ECCN and the item is being exported, reexported or transferred (in-country) for a civil end-use, 125 additional destinations would be authorized. Civil end-use is defined as an end-use that is not a military end-use as defined by § 744.21(f) or a proliferation activity described and prohibited by part 744 of the EAR.

Limitations on Subsequent Transactions That Apply to License Exception STA

Proposed § 740.20 would preclude use of License Exception APR paragraph (a) (§ 740.16(a)) for items that have been shipped pursuant to this License Exception STA.

Conditions That Apply to License Exception STA

Proposed § 740.20 would impose three conditions that would apply to transactions made pursuant to License Exception STA.

(1) Exporters would be required to furnish the consignee with the ECCN that applies to each item transferred under License Exception STA.

(2) Reexporters and transferors would be required to provide subsequent consignees with the ECCN provided by the exporter or prior reexporters or transferors.

(3) Exporters, reexporters and transferors would be required to obtain from their consignees, prior to the shipment, a written statement identifying the items to be shipped and restating the ECCN(s) provided to the consignees by the exporters, reexporters or transferors. The statement must also acknowledge that the consignee:

- Is aware that items will be shipped pursuant to License Exception STA;
- Has been informed of the description of the items and their ECCN(s) by the exporter, reexporter or transferor;
- Understands that shipment pursuant to License Exception STA precludes subsequent use of paragraph (a) of License Exception APR for the items;
- Agrees not to export, reexport or transfer these items to any destination, enduse or end-user prohibited by the EAR;
- Agrees that, for items subject to a civil end-use restriction, the only end-use of the items will be civil; and
- Agrees to provide copies of this document and all other export, reexport or transfer record (*i.e.,* the documents described in part 762 of the EAR) relevant to the items referenced in this statement to the U.S. Government as set forth in § 762.7.

(4) Exporters, reexporters and transferors using License Exception STA would be required to use a special destination control statement that applies to shipments made pursuant to License Exception STA. Like the destination control statement requirement that currently applies to most exports of items listed in specific entries on the Commerce Control List, the destination control statement that applies to License Exception STA would have to be placed on documents that accompany the shipment. Unlike the current destination control statement, this new destination control statement would apply to reexports and transfers (in-country) abroad. In addition to noting that the shipment is subject to the EAR and that any further disposition must be in accordance with those regulations, this new destination control statement would include the ECCN applicable to each item, explicitly state that the shipment is being made pursuant to License Exception STA and explicitly state that subsequent exports or reexports under paragraph (a) of License Exception APR are prohibited.

Addition of License Exception STA Exclusion Paragraphs to 50 ECCNs

As noted above, this rule adds such paragraphs to 50 ECCNs. The STA exclusion paragraphs, which closely track the Wassenaar Arrangement Sensitive List, designate certain items that would not be eligible for License Exception STA other than for the 37 destinations set forth in proposed § 740.20(c)(1).

Incidental Changes Necessary to Implement License Exception STA

Cross Reference to Wassenaar Arrangement Reporting Requirements

New § 740.20 would cross reference the Wassenaar Arrangement reporting requirements in § 743.1 of the EAR because Wassenaar Arrangement Sensitive List items exported pursuant to License Exception STA would be subject to the reporting requirements of § 743.1.

Revisions to § 732.4

Section 732.4 of the EAR explains how to identify and use license exceptions. This proposed rule would revise that section to note the License Exception STA exclusion paragraphs in ECCNs and to add License Exception STA to the list of license exceptions that are subject to the Wassenaar Arrangement reporting requirements of § 743.1 of the EAR.

Revision to § 738.2(d)(2)(i) Explaining the Use of the License Exception STA Exclusion Paragraphs in ECCNs

Section 738.2 of the EAR explains the workings of the Commerce Control List, and paragraph (d)(2)(i) of that section explains the "License Exception" paragraph of an ECCN. This proposed rule would revise that paragraph to explain the role of the STA exclusion paragraphs, which is different from that of the other license exception paragraphs that appear in ECCNs. The other license exception paragraphs signal eligibility to use a license exception and the limits of that eligibility. The STA exclusion paragraphs signal that two authorizing paragraphs of License Exception STA may not be used.

Revision to § 743.1 Wassenaar Arrangement Reporting

Wassenaar Arrangement member states, including the United States, are required to report to the Wassenaar Arrangement exports of Sensitive List items to non-member states for which a license was not issued. Section 743.1 of the EAR requires exporters using certain license exceptions for such exports to report the export to BIS. The information reported by the exporters is used to compile the report that the United States submits to the Wassenaar Arrangement. To enable the United States to meet its reporting obligations to the Wassenaar Arrangement, this proposed rule would add License Exception STA to § 743.1.

Revision to § 758.6

Section 758.6 of the EAR imposes a destination control statement that applies to exports of all items subject to the EAR that are not classified as EAR99, *i.e.,* to all items that are not controlled under a specific entry on the Commerce Control List. This rule would add language to § 758.6 to alert readers that transactions authorized by License Exception STA are subject to the destination control statement found in § 740.20(d)(3).

Rulemaking Requirements

1. This rule has been determined to be significant for purposes of Executive Order 12866.

2. Notwithstanding any other provision of law, no person is required to respond to, nor is subject to a penalty for failure to comply with, a collection of information, subject to the requirements of the Paperwork Reduction Act of 1995 (44 U.S.C. 3501 *et seq.*) (PRA), unless that collection of information displays a currently valid Office of Management and Budget (OMB) Control Number.

The proposed rule would affect a collection of information approved by OMB under control number 0607–0152 (the Automated Export System or AES). That collection is administered by the Census Bureau. For most exports of items subject to the EAR, the export license number, a license exception symbol or the designator NLR (no license required) must be entered into AES. BIS believes that this rule, if implemented in final form, would have no material impact on the burden imposed by that collection because this rule would, in effect, merely replace an existing requirement to enter the license number with a requirement to enter a license exception symbol instead.

This rule also amends a collection of information approved by OMB under control number 0694–0137 (License Exemptions and Exclusions). This control number is being amended to add the proposed requirement for exporters, reexporters and transferors to furnish ECCNs, to prepare and furnish a revised destination control statement and to obtain a statement of assurance from the consignee before shipping pursuant to the license exception that would be created by this rule. BIS expects the requirements are likely to increase the burden associated with control number 0694–0137 by about 3,200 hours (3,200 transactions @ 1 hour each). BIS believes that, in most instances, this new burden will be wholly or partially offset by a reduction in burden under control number 0694–0088 (Simplified Network Application Processing System) which authorizes, among other things, export license applications.

3. This rule does not contain policies with Federalism implications as that term is defined under E.O. 13132.

4. The Chief Counsel for Regulations of the Department of Commerce has certified to the Chief Counsel for Advocacy of the Small Business Administration that this proposed rule, if adopted in final form, would not have a significant economic impact on a substantial number of small entities.

Number of Small Entities

Currently, BIS does not collect data on the size of entities that currently apply for and are issued export licenses. Although BIS is unable to estimate the exact number of small entities that would be impacted by this rule, it does acknowledge that this rule will impact some unknown number.

Economic Impact

BIS believes that this rule would reduce the costs to small entities because it would provide an alternative to existing license requirements. Small entities (and all other entities) would be able to choose to: (1) Comply with the safeguard provisions of the license exception that would be created by this rule; (2) continue to apply for licenses before engaging in the transactions that would be affected by this rule; or (3) use any other license exception in the EAR that authorizes a particular transaction.

BIS believes that in many instances, small entities will elect to comply with the safeguard provisions and use the license exception that would be created by this rule because they are likely to find doing so less costly than the requirements of applying for and obtaining an export license as is currently required for most transactions that would be affected by this rule.

Obtaining an export license requires submitting a detailed product description and the names, addresses and contact information about most parties to the transaction. Moreover, the applicant is unable to engage in the transaction until it receives approval from the government to do so and thus incurs the costs associated with uncertainty and delay before it can make a sale. In many instances, approval is granted only with conditions that may impose notification requirements or end-use restrictions. In some instances, the applicant must also obtain an import or end-user certificate from its proposed consignee, a document that the consignee must obtain from its government. In other instances, the applicant must obtain a written statement from the proposed consignee describing the transactions and providing assurance that it will not reship the items in violation of the EAR.

Under the license exception proposed in this rule, the party wishing to ship the item need not contact BIS prior to the shipment for export control purposes. Instead, that party would inform its proposed consignee of the description of the items being exported, the ECCN under which they are classified and a standard set of restrictions on further shipments of the

items. The party may proceed with the transaction once it has obtained from its consignee a statement that includes: (1) A written acknowledgement of the receipt of that information; (2) a commitment to comply with the EAR; and (3) a commitment to furnish information about the transaction to the United States Government upon request.

Exporters of certain items that are subject to national security export controls would be required to report the transaction to BIS after the export takes place if the item is exported to a destination that is not a member of the Wassenaar Arrangement. However, currently such exports must be made pursuant to either an existing license exception or as authorized by a license. If the export is made pursuant to an existing license exception, it is already subject to this post-shipment reporting requirement so exporters who switch from an existing license exception to this new license exception would incur no new or increased burden as a result of this post-shipment reporting requirement. If an export currently is made as authorized, the exporter who elects to use this new license exception would be exchanging the burden of applying for a license and waiting to learn the results for the burden of submitting a post-shipment report.

Conclusion

BIS is unable to determine whether there are a substantial number of small entities affected by this rule. However, the effect of this rule on all entities is not likely to be a significant economic impact. In some instances, parties shipping under the license exception that this rule would create would be required to obtain documents from their consignees that they are not currently required to obtain. In some instances, parties shipping under the license exception that this rule would create would be required to provide a post-shipment report that they are not currently required to provide. However, any increase in costs arising from those two requirements is likely to be offset by the fact that parties who elect to use License Exception STA would no longer be required to submit detailed information to the government in advance and wait for authorization before proceeding. Moreover the fact that parties may elect to: (1) Use the new License Exception STA that would be created by this rule, (2) use any existing license exception that authorizes the transaction, or (3) comply with existing license requirements provides substantial assurance that the safeguards requirements of the new license exception would not be applied except in instances in which the party that wishes to transfer the items believes that those safeguard procedures impose a lesser cost than does any available existing license exception or the existing license procedure.

For the reasons above, the Chief Counsel for Regulation certified that this rule would not have a significant economic impact on a substantial number of small entities.

List of Subjects

15 CFR Parts 732, 740, and 758

Administrative practice and procedure, Exports, Reporting and recordkeeping requirements.

15 CFR Part 738

Exports.

15 CFR Part 743

Administrative practice and procedure, Reporting and recordkeeping requirements.

15 CFR Part 774

Exports, Reporting and recordkeeping requirements.

Accordingly, the Export Administration Regulations (15 CFR parts 730–774) are proposed to be amended as follows:

PART 732—[AMENDED]

1. The authority citation for part 732 continues to read as follows:

Authority: 50 U.S.C. app. 2401 *et seq.;* 50 U.S.C. 1701 *et seq.;* E.O. 13026, 61 FR 58767, 3 CFR, 1996 Comp., p. 228; E.O. 13222, 66 FR 44025, 3 CFR, 2001 Comp., p. 783; Notice of August 12, 2010, 75 FR 50681 (August 16, 2010).

2. Section 732.4 is amended by:

a. Adding two sentences immediately following the existing third sentence in paragraph (b)(3)(iii); and

b. Revising paragraph (b)(3)(iv) to read as follows:

§ 732.4 Steps regarding License Exceptions.

* * * * *

(b) * * *

(iii) * * * Some ECCNs contain License Exception STA exclusion paragraphs. Those paragraphs delineate items excluded from the License Exception STA provisions in § 740.20(c)(2) of the EAR. * * *

(iv) If you are exporting under License Exceptions GBS, CIV, LVS, STA, APP, TSR or GOV, you should review § 743.1 of the EAR to determine the applicability of certain reporting requirements.

* * * * *

PART 738—[AMENDED]

3. The authority citation for part 738 continues to read as follows:

Authority: 50 U.S.C. app. 2401 *et seq.;* 50 U.S.C. 1701 *et seq.;* 10 U.S.C. 7420; 10 U.S.C. 7430(e); 22 U.S.C. 287c; 22 U.S.C. 3201 *et seq.;* 22 U.S.C. 6004; 30 U.S.C. 185(s), 185(u); 42 U.S.C. 2139a; 42 U.S.C. 6212; 43 U.S.C. 1354; 15 U.S.C. 1824a; 50 U.S.C. app. 5; 22 U.S.C. 7201 *et seq.;* 22 U.S.C. 7210; E.O. 13026, 61 FR 58767, 3 CFR, 1996 Comp., p. 228; E.O. 13222, 66 FR 44025, 3 CFR, 2001 Comp., p. 783; Notice of August 12, 2010, 75 FR 50681 (August 16, 2010).

4. Section 738.2 is amended by adding two sentences immediately following the existing third sentence in paragraph (d)(2)(ii) to read as follows:

§ 738.2 Commerce Control List structure.

* * * * *

(d) * * *

(2) * * *

(ii) * * * Some ECCNs have License Exception STA exclusion paragraphs. These paragraphs identify items for which the License Exception STA provisions in § 740.20(c)(2)(i) and (ii) of the EAR may not be used, but do not otherwise affect License Exception STA availability. * * *

* * * * *

PART 740—[AMENDED]

5. The authority citation for part 740 continues to read as follows:

Authority: 50 U.S.C. app. 2401 *et seq.;* 50 U.S.C. 1701 *et seq.;* 22 U.S.C. 7201 *et seq.;* E.O. 13026, 61 FR 58767, 3 CFR, 1996 Comp., p. 228; E.O. 13222, 66 FR 44025, 3 CFR, 2001 Comp., p. 783; Notice of August 12, 2010, 75 FR 50681 (August 16, 2010).

6. Add § 740.20 to read as follows:

§ 740.20 License Exception Strategic Trade Authorization (STA).

(a) *Introduction.* This section authorizes exports, reexports and transfers (in-country) in lieu of a license that would otherwise be required pursuant to part 742 of the EAR. In this section, the term "transaction" means exports, reexports *and* transfers (in-country).

(b) *Requirements and limitations*—(1) *Requirements for using License Exception STA.* (i) All of the reasons for control that impose a part 742 license requirement on the *transaction* must be addressed in at least one authorizing paragraph of this section.

(ii) The party using License Exception STA must comply with all of the requirements in paragraph (d) of this section.

(2) *Limitations on use of License Exception STA.* (i) License Exception STA may not be used in lieu of any

license requirement imposed by: "Part 744—Control Policy: End User and End Use Based" or by "Part 746—Embargoes and other Special Controls" of the EAR.

(ii) License Exception STA may not be used for any transaction involving an item controlled under ECCNs 0A981 or 0A983.

(iii) License Exception STA may not be used for any transaction involving an item that is controlled for reason of short supply (SS), surreptitious listening (SL), missile technology (MT) or chemical weapons (CW).

(iv) License Exception STA may not be used for any transaction involving an item identified on the CCL as being subject to the export control jurisdiction of another agency, such as the Department of State, the Department of Energy, or the Nuclear Regulatory Commission.

(c) *Authorizing paragraphs*—(1) *Transactions subject to multiple reasons for control.* Transactions in which the only applicable reason(s) for control is (are): National security (NS); chemical or biological weapons (CB); nuclear nonproliferation (NP); regional stability (RS); encryption items (EI); crime control (CC), but not ECCNs 0A981, 0A982, 0A983, 0A985 or 0E982; and/or significant items (SI) are authorized for destinations in: Argentina, Australia, Austria, Belgium, Bulgaria, Canada, Croatia, Czech Republic, Denmark, Estonia, Finland, France, Germany, Greece, Hungary, Iceland, Ireland, Italy, Japan, Latvia, Lithuania, Luxembourg, Netherlands, New Zealand, Norway, Poland, Portugal, Romania, Slovakia, Slovenia, South Korea, Spain, Sweden, Switzerland, Turkey, Ukraine and the United Kingdom.

(2) *Transactions subject to national security controls of lesser sensitivity.* Transactions in which the only applicable reason for control *is* national security (NS) and the *item* being exported, reexported or transferred (in-country) *is not* designated in the "STA exclusion" paragraph in the ECCN that lists the item are authorized if:

(i) The destination is in Albania or Israel; *or*

(ii) The item is being exported, reexported or transferred (in-country) *for a civil end-use* and the destination is in Algeria, Andorra, Antigua and Barbuda, Armenia, Aruba, Azerbaijan, Bahamas, Bahrain, Bangladesh, Barbados, Belize, Benin, Bhutan, Bolivia, Bosnia and Herzegovina, Botswana, Brazil, Brunei, Burkina Faso, Burundi, Cambodia, Cameroon, Cape Verde, Central African Republic, Chad, Chile, Colombia, Comoros, Congo (Republic of the), Costa Rica, Djibouti, Dominica, Dominican Republic, East Timor, Ecuador, El Salvador, Equatorial Guinea, Ethiopia, Fiji, Gabon, Gambia (The), Georgia, Ghana, Grenada, Guatemala, Guinea, Guinea-Bissau, Guyana, Honduras, Hong Kong, India, Jamaica, Jordan, Kazakhstan, Kenya, Kiribati, Kosovo, Kuwait, Kyrgyzstan, Laos, Lesotho, Liechtenstein, Macedonia (Former Yugoslav Republic), Madagascar, Malawi, Maldives, Mali, Malta, Marshall Islands, Mauritania, Mauritius, Mexico, Micronesia (Federated States of), Moldova, Monaco, Mongolia, Montenegro, Morocco, Mozambique, Namibia, Nauru, Nepal, Netherlands Antilles, Nicaragua, Niger, Nigeria, Oman, Palau, Panama, Papua New Guinea, Paraguay, Peru, Philippines, Qatar, Rwanda, Saint Kitts & Nevis, Saint Lucia, Saint Vincent and the Grenadines, Samoa, San Marino, Sao Tome & Principe, Saudi Arabia, Senegal, Seychelles, Singapore, Solomon Islands, South Africa, Surinam, Swaziland, Taiwan, Tajikistan, Tanzania, Thailand, Togo, Tonga, Trinidad & Tobago, Tunisia, Turkmenistan, Tuvalu, Uruguay, Uzbekistan, Vanuatu, Vatican City, Western Sahara and Zambia. For purposes of this section, civil end-use means an end-use other than a military end-use as defined in section 744.21(f) or a proliferation activity described and prohibited by part 744 of the EAR.

(d) *Conditions*—(1) *Requirement to furnish Export Control Classification Number.* (i) The exporter must furnish to the consignee the Export Control Classification Number of each item to be shipped pursuant to this section.

(ii) A reexporter or transferor must furnish to subsequent consignees the Export Control Classification Number, provided by the exporter or a prior reexporter or transferor, of each item to be shipped pursuant to this section.

(2) *Prior Consignee Statement.* The exporter, reexporter or transferor must obtain the following statement in writing from its consignee prior to shipping the item and must retain the statement in accordance with part 762 of the EAR.

[INSERT NAME OF CONSIGNEE]:

(i) Is aware that [INSERT DESCRIPTION AND APPLICABLE ECCNS OF ITEMS TO BE SHIPPED] will be shipped pursuant to License Exception Strategic Trade Authorization (STA) in § 740.20 of the United States Export Administration Regulations (15 CFR 740.20);

(ii) Has been informed of the ECCNs noted above by [INSERT NAME OF EXPORTER, REEXPORTER OR TRANSFEROR];

(iii) Understands that items shipped pursuant to License Exception STA may not subsequently be reexported pursuant to paragraph (a) of License Exception APR (15 CFR 740.16(a));

(iv) Agrees not to export, reexport or transfer these items to any destination, use or user prohibited by the United States Export Administration Regulations;

(v) Agrees that the items shipped pursuant to § 740.20(c)(1)(ii) will only be used in a civil end-use; and

(vi) Agrees to provide copies of this document and all other export, reexport or transfer record (*i.e.,* the documents described in 15 CFR part 762) relevant to the items referenced in this statement to the U.S. Government as set forth in 15 CFR 762.7.

(3) *Destination Control Statement.* The Destination Control Statement (DCS) must be entered by the exporter, reexporter or transferor on the invoice and on any other "export control document" that accompanies the shipment from its point of origin to the ultimate consignee or end-user for all export, reexports and transfers (in-country) made pursuant to License Exception STA. The person responsible for preparation of those documents is responsible for entry of the DCS. The DCS is required for all exports, reexports and transfers (in-country) made pursuant to this section. At a minimum, the DCS must state:

[INSERT NAME AND APPLICABLE ECCN FOR EACH ITEM INCLUDED IN THE SHIPMENT]

These commodities, technology or software are subject to the Export Administration Regulations (15 CFR 730–774) and were exported from the United States or reexported or transferred in accordance with License Exception Strategic Trade Authorization (STA). Any further reexport or transfer must be in accordance with the Export Administration Regulations. Paragraph (a) of License Exception APR (15 CFR 740.16(a)), which permits reexports from certain countries without additional U.S. Government authorization, may not be used as an authorization for any transactions involving these items.

(e) *Limitation on subsequent transactions.* If an item has been exported, reexported or transferred (in-country) pursuant to this section, it may not be subsequently exported, reexported or transferred (in-country) pursuant to paragraph (a) of License Exception APR (§ 740.16(a) of the EAR).

(f) *Applicability of Wassenaar Arrangement reporting requirements.* See § 743.1 of the EAR for special reporting requirements that apply to some exports made pursuant to this section.

PART 743—[AMENDED]

7. The authority citation for part 743 continues to read as follows:

Authority: 50 U.S.C. app. 2401 *et seq.;* 50 U.S.C. 1701 *et seq.;* E.O. 13222, 66 FR 44025, 3 CFR, 2001 Comp., p. 783; Notice of August 12, 2010, 75 FR 50681 (August 16, 2010).

8. Section 743.1 is amended by adding a paragraph (b)(4) to read as follows:

§ 743.1 Wassenaar Arrangement.

* * * * *

(b) * * *

(4) Exports authorized under License Exception STA (See § 740.20 of the EAR).

* * * * *

PART 758—[AMENDED]

9. The authority citation for part 758 continues to read as follows:

Authority: 50 U.S.C. app. 2401 *et seq.;* 50 U.S.C. 1701 *et seq.;* E.O. 13222, 66 FR 44025, 3 CFR, 2001 Comp., p. 783; Notice of August 12, 2010, 75 FR 50681 (August 16, 2010).

10. Section 758.6 is amended by adding a sentence at the end of the section to read as follows:

§ 758.6 Destination control statement.

* * * In addition to the destination control statement in this section, the destination control statement requirements of § 740.20(d)(3) of the EAR apply to exports, reexports and transfers (in-country) made pursuant to License Exception Strategic Trade Authorization (STA).

PART 774—[AMENDED]

11. The authority citation for part 774 continues to read as follows:

Authority: 50 U.S.C. app. 2401 *et seq.;* 50 U.S.C. 1701 *et seq.;* 10 U.S.C. 7420; 10 U.S.C. 7430(e); 22 U.S.C. 287c, 22 U.S.C. 3201 *et seq.,* 22 U.S.C. 6004; 30 U.S.C. 185(s), 185(u); 42 U.S.C. 2139a; 42 U.S.C. 6212; 43 U.S.C. 1354; 15 U.S.C. 1824a; 50 U.S.C. app. 5; 22 U.S.C. 7201 *et seq.;* 22 U.S.C. 7210; E.O. 13026, 61 FR 58767, 3 CFR, 1996 Comp., p. 228; E.O. 13222, 66 FR 44025, 3 CFR, 2001 Comp., p. 783; Notice of August 12, 2010, 75 FR 50681 (August 16, 2010).

12. In Supplement No. 1 to Part 774 (the Commerce Control List), Category 1, ECCN 1A002 is amended by adding at the end of the License Exception section, a new License Exception STA paragraph to read as follows:

Supplement No. 1 to Part 774—The Commerce Control List

* * * * *

1A002 "Composite" structures or laminates, having any of the following (see List of Items Controlled).

* * * * *

License Exceptions

* * * * *

STA: Paragraph (c)(2) of License Exception STA (§ 740.20(c)(2)) of the EAR may not be used for any item in this entry.

* * * * *

13. In Supplement No. 1 to Part 774 (the Commerce Control List), Category 1, ECCN 1C001 is amended by adding at the end of the License Exception section, a new License Exception STA paragraph to read as follows:

1C001 Materials specially designed for use as absorbers of electromagnetic waves, or intrinsically conductive polymers, as follows (see List of Items Controlled).

* * * * *

License Exceptions

* * * * *

STA: Paragraph (c)(2) of License Exception STA (§ 740.20(c)(2)) of the EAR may not be used for any item in this entry.

* * * * *

14. In Supplement No. 1 to Part 774 (the Commerce Control List), Category 1, ECCN 1C007 is amended by adding at the end of the License Exception section, a new License Exception STA paragraph to read as follows:

1C007 Ceramic base materials, non-"composite" ceramic materials, ceramic-"matrix" "composite" materials and precursor materials, as follows (see List of Items Controlled).

* * * * *

License Exceptions

* * * * *

STA: Paragraph (c)(2) of License Exception STA (§ 740.20(c)(2)) of the EAR may not be used for any item in 1C007.c or d.

* * * * *

15. In Supplement No. 1 to Part 774 (the Commerce Control List), Category 1, ECCN 1C010 is amended by adding at the end of the License Exception section, a new License Exception STA paragraph to read as follows:

1C010 "Fibrous or filamentary materials" as follows (see List of Items Controlled).

* * * * *

License Exceptions

* * * * *

STA: Paragraph (c)(2) of License Exception STA (§ 740.20(c)(2)) of the EAR may not be used for any item in 1C010.c or d.

* * * * *

16. In Supplement No. 1 to Part 774 (the Commerce Control List), Category 1, ECCN 1C012 is amended by adding at the end of the License Exception section, a new License Exception STA paragraph to read as follows:

1C012 Materials, as follows (see List of Items Controlled).

* * * * *

License Exceptions

* * * * *

STA: Paragraph (c)(2) of License Exception STA (§ 740.20(c)(2)) of the EAR may not be used for any item in this entry.

* * * * *

17. In Supplement No. 1 to Part 774 (the Commerce Control List), Category 1, ECCN 1D002 is amended by adding at the end of the License Exception section, a new License Exception STA paragraph to read as follows:

1D002 "Software" for the "development" of organic "matrix", metal "matrix" or carbon "matrix" laminates or "composites".

* * * * *

License Exceptions

* * * * *

STA: Paragraph (c)(2) of License Exception STA (§ 740.20(c)(2)) of the EAR may not be used for "software" for the "development" of organic "matrix", metal "matrix" or carbon "matrix" laminates or "composites" specified ECCN 1A002.

* * * * *

18. In Supplement No. 1 to Part 774 (the Commerce Control List), Category 1, ECCN 1E001 is amended by adding at the end of the License Exception section, a new License Exception STA paragraph to read as follows:

1E001 "Technology" according to the General Technology Note for the "development" or "production" of items controlled by 1A001.b, 1A001.c, 1A002, 1A003, 1A004, 1A005, 1A006.b, 1A007, 1A008, 1A101, 1B (except 1B999), or 1C (except 1C355, 1C980 to 1C984, 1C988, 1C990, 1C991, 1C995 to 1C999).

* * * * *

License Exceptions

* * * * *

STA: Paragraph (c)(2) of License Exception STA (§ 740.20(c)(2)) of the EAR may not be used for "technology" according to the General Technology Note for the "development" or "production" of equipment and materials specified by ECCNs 1A002, 1C001, 1C007.c or d, 1C010.c or d or 1C012.

* * * * *

19. In Supplement No. 1 to Part 774 (the Commerce Control List), Category 1, ECCN 1E002 is amended by adding at the end of the License Exception section, a new License Exception STA paragraph to read as follows:

1E002 Other "technology" as follows (see List of Items Controlled).

* * * * *

License Exceptions

* * * * *

STA: Paragraph (c)(2) of License Exception STA (§ 740.20(c)(2)) of the EAR may not be used for any item in 1E002.e or .f.

* * * * *

20. In Supplement No. 1 to Part 774 (the Commerce Control List), Category 2, ECCN 2D001 is amended by adding at the end of the License Exception section, a new License Exception STA paragraph to read as follows:

2D001 "Software", other than that controlled by 2D002, specially designed or modified for the "development", "production" or "use" of equipment controlled by 2A001 or 2B001 to 2B009.

* * * * *

License Exceptions

* * * * *

STA: Paragraph (c)(2) of License Exception STA (§ 740.20(c)(2)) of the EAR may not be used for "software", other than that specified by ECCN 2D002, specially designed for the "development" or "production" of equipment as follows:

ECCN 2B001 entire entry; or

"Numerically controlled" or manual machine tools as specified in 2B003.

* * * * *

21. In Supplement No. 1 to Part 774 (the Commerce Control List), Category 2, ECCN 2E001 is amended by adding at the end of the License Exception section, a new License Exception STA paragraph to read as follows:

2E001 "Technology" according to the General Technology Note for the "development" of equipment or "software" controlled by 2A (except 2A983, 2A984, 2A991, or 2A994), 2B (except 2B991, 2B993, 2B996, 2B997, or 2B998), or 2D (except 2D983, 2D984, 2D991, 2D992, or 2D994).

* * * * *

License Exceptions

* * * * *

STA: Paragraph (c)(2) of License Exception STA (§ 740.20(c)(2)) of the EAR may not be used for "technology" according to the General Technology Note for the "development" of "software" specified in the License Exception STA paragraph in the License Exception section of ECCN 2D001 or for the "development" of equipment as follows:

ECCN 2B001 entire entry; or

"Numerically controlled" or manual machine tools as specified in 2B003.

* * * * *

22. In Supplement No. 1 to Part 774 (the Commerce Control List), Category 2, ECCN 2E002 is amended by adding at the end of the License Exception section, a new License Exception STA paragraph to read as follows:

2E002 "Technology" according to the General Technology Note for the "production" of equipment controlled by 2A (except 2A983, 2A984, 2A991, or 2A994), or 2B (except 2B991, 2B993, 2B996, 2B997, or 2B998).

* * * * *

License Exceptions

* * * * *

STA: Paragraph (c)(2) of License Exception STA (§ 740.20(c)(2)) of the EAR may not be used for "technology" according to the General Technology Note for the "production" of equipment as follows:

ECCN 2B001 entire entry; or

"Numerically controlled" or manual machine tools as specified in 2B003.

* * * * *

23. In Supplement No. 1 to Part 774 (the Commerce Control List), Category 3, ECCN 3A002 is amended by adding at the end of the License Exception section, a new License Exception STA paragraph to read as follows:

3A002 General purpose electronic equipment and accessories therefor, as follows (see List of Items Controlled).

* * * * *

License Exceptions

* * * * *

STA: Paragraph (c)(2) of License Exception STA (§ 740.20(c)(2)) of the EAR may not be used for any item in 3A002.g.1.

* * * * *

24. In Supplement No. 1 to Part 774 (the Commerce Control List), Category 3, ECCN 3B001 is amended by adding at the end of the License Exception section, a new License Exception STA paragraph to read as follows:

3B001 Equipment for the manufacturing of semiconductor devices or materials, as follows (see List of Items Controlled) and specially designed components and accessories therefor.

* * * * *

License Exceptions

* * * * *

STA: Paragraph (c)(2) of License Exception STA (§ 740.20(c)(2)) of the EAR may not be used for any item in 3B001.a.2.

* * * * *

25. In Supplement No. 1 to Part 774 (the Commerce Control List), Category 3, ECCN 3D001 is amended by adding at the end of the License Exception section, a new License Exception STA paragraph to read as follows:

3D001 "Software" specially designed for the "development" or "production" of equipment controlled by 3A001.b to 3A002.g or 3B (except 3B991 and 3B992).

* * * * *

License Exceptions

* * * * *

STA: Paragraph (c)(2) of License Exception STA (§ 740.20(c)(2)) of the EAR may not be used for "software" specially designed for the "development" or "production" of equipment specified by 3A002.g.1 or 3B001.a.2.

* * * * *

26. In Supplement No. 1 to Part 774 (the Commerce Control List), Category 3, ECCN 3E001 is amended by adding at the end of the License Exception section, a new License Exception STA paragraph to read as follows:

3E001 "Technology" according to the General Technology Note for the "development" or "production" of equipment or materials controlled by 3A (except 3A292, 3A980, 3A981, 3A991 3A992, or 3A999), 3B (except 3B991 or 3B992) or 3C (except 3C992).

* * * * *

License Exceptions

* * * * *

STA: Paragraph (c)(2) of License Exception STA (§ 740.20(c)(2)) of the EAR may not be used for "technology" according to the General Technology Note for the "development" or "production" of equipment specified by ECCNs 3A002.g.1. or 3B001.a.2.

* * * * *

27. In Supplement No. 1 to Part 774 (the Commerce Control List), Category 4, ECCN 4A001 is amended by adding at the end of the License Exception section, a new License Exception STA paragraph to read as follows:

4A001 Electronic computers and related equipment, having any of the following (see List of Items Controlled), and "electronic assemblies" and specially designed components therefor.

* * * * *

License Exceptions

* * * * *

STA: Paragraph (c)(2) of License Exception STA (§ 740.20(c)(2)) of the EAR may not be used for any commodity in 4A001.a.2.

* * * * *

28. In Supplement No. 1 to Part 774 (the Commerce Control List), Category 4, ECCN 4D001 is amended by adding at the end of the License Exception section, a new License Exception STA paragraph to read as follows:

4D001 "Software" as follows (see List of Items Controlled).

* * * * *

License Exceptions

* * * * *

STA: Paragraph (c)(2) of License Exception STA (§ 740.20(c)(2)) of the EAR may not be used for "software" specially designed for the "development" or "production" of equipment specified by ECCN 4A001.a.2 or for the "development" or "production" of "digital computers" having an 'Adjusted Peak Performance' ('APP') exceeding 0.5 Weighted TeraFLOPS (WT).

* * * * *

29. In Supplement No. 1 to Part 774 (the Commerce Control List), Category 4,

ECCN 4E001 is amended by adding at the end of the License Exception section, a new License Exception STA paragraph to read as follows:

4E001 "Technology" as follows (see List of Items Controlled).

License Exceptions

* * * * *

STA: Paragraph (c)(2) of License Exception STA (§ 740.20(c)(2)) of the EAR may not be used for "technology" according to the General Technology Note for the "development" or "production" of any of the following equipment or "software":

a. Equipment specified by ECCN 4A001.a.2;

b. "Digital computers" having an 'Adjusted Peak Performance' ('APP') exceeding 0.5 Weighted TeraFLOPS (WT); or

c. "Software" specified in the License Exception STA paragraph found in the License Exception section of ECCN 4D001.

30. In Supplement No. 1 to Part 774 (the Commerce Control List), Category 5, Part 1, ECCN 5A001 is amended by adding at the end of the License Exception section, a new License Exception STA paragraph to read as follows:

5A001 Telecommunications systems, equipment, components and accessories, as follows (see List of Items Controlled).

* * * * *

License Exceptions

* * * * *

STA: Paragraph (c)(2) of License Exception STA (§ 740.20(c)(2)) of the EAR may not be used for any commodity in 5A001.b.3 or b.5

* * * * *

31. In Supplement No. 1 to Part 774 (the Commerce Control List), Category 5, Part 1, ECCN 5B001 is amended by adding at the end of the License Exception section, a new License Exception STA paragraph to read as follows:

5B001 Telecommunication test, inspection and production equipment, components and accessories, as follows (See List of Items Controlled).

* * * * *

License Exceptions

* * * * *

STA: Paragraph (c)(2) of License Exception STA (§ 740.20(c)(2)) of the EAR may not be used for 5B001.a equipment and specially designed components or accessories therefor, specially designed for the "development", "production" or "use" of equipment, functions or features specified by in ECCN 5A001.b.3 or b.5.

* * * * *

32. In Supplement No. 1 to Part 774 (the Commerce Control List), Category 5, Part 1, ECCN 5D001 is amended by adding at the end of the License Exception section, a new License Exception STA paragraph to read as follows:

5D001 "Software" as follows (see List of Items Controlled).

* * * * *

License Exceptions

* * * * *

STA: Paragraph (c)(2) of License Exception STA (§ 740.20(c)(2)) of the EAR may not be used for 5D001.a for "software" specially designed for the "development" or "production" of equipment, functions or features, specified by ECCN 5A001.b.3 or .b.5; and for 5D001.b. for "software" specially designed or modified to support "technology" specified by the STA paragraph in the License Exception section of ECCN 5E001.

* * * * *

33. In Supplement No. 1 to Part 774 (the Commerce Control List), Category 5, Part 1, ECCN 5E001 is amended by adding at the end of the License Exception section, a new License Exception STA paragraph to read as follows:

5E001 "Technology" as follows (see List of Items Controlled).

* * * * *

License Exceptions

* * * * *

STA: Paragraph (c)(2) of License Exception STA (§ 740.20(c)(2)) of the EAR may not be used for "technology" according to the General Technology Note for the "development" or "production" of equipment, functions or features specified by 5A001.b.3 or .b.5 or for "software" in 5D001.a that is specified in the STA paragraph in the License Exception section of ECCN 5D001.

* * * * *

34. In Supplement No. 1 to Part 774 (the Commerce Control List), Category 6, ECCN 6A001 is amended by adding at the end of the License Exception section, a new License Exception STA paragraph to read as follows:

6A001 Acoustic systems, equipment and components, as follows (see List of Items Controlled).

* * * * *

License Exceptions

* * * * *

STA: Paragraph (c)(2) of License Exception STA (§ 740.20(c)(2)) of the EAR may not be used for commodities in 6A001.a.1.b, 6A001.a.1.e or 6A001.a.2.

* * * * *

35. In Supplement No. 1 to Part 774 (the Commerce Control List), Category 6, ECCN 6A002 is amended by revising the ECCN heading and by adding at the end of the License Exception section, a new License Exception STA paragraph to read as follows:

6A002 Optical sensors or equipment and components therefore, as follows (see List of Items Controlled).

* * * * *

License Exceptions

* * * * *

STA: Paragraph (c)(2) of License Exception STA (§ 740.20(c)(2)) of the EAR may not be used for:

6A002.a.1.a., b. or c; or

6A002.a.2.a. in which the photocathode in described in 6A002.a.2.a 3.a is a Multialkali photocathode (e.g., S–20 and S–25) having a luminous sensitivity exceeding 700 μA/lm; or

6A002.a.2.b; or

6A002.a.3; or

6A002.b; or

6A002.c "Direct view" imaging equipment incorporating any of the following:

1. Image intensifier tubes having the characteristics listed in the description of 6A002.a.2.a earlier in this STA paragraph of License Exception section to this ECCN or 6A002.a.2.b; or

2. "Focal plane arrays" having the characteristics listed in the description of 6A002.a.3; or

6A002.e.

* * * * *

36. In Supplement No. 1 to Part 774 (the Commerce Control List), Category 6, ECCN 6A003 is amended by adding at the end of the License Exception section, a new License Exception STA paragraph to read as follows:

6A003 Cameras.

* * * * *

License Exceptions

* * * * *

STA: Paragraph (c)(2) of License Exception STA (§ 740.20(c)(2)) of the EAR may not be used for: 6A003.b.3 and b.4.

* * * * *

37. In Supplement No. 1 to Part 774 (the Commerce Control List), Category 6, ECCN 6A004 is amended by adding at the end of the License Exception section, a new License Exception STA paragraph to read as follows:

6A004 Optical equipment and components, as follows (see List of Items Controlled).

* * * * *

License Exceptions

* * * * *

STA: Paragraph (c)(2) of License Exception STA (§ 740.20(c)(2)) of the EAR may not be used for any commodity in 6A004.c and d.

* * * * *

38. In Supplement No. 1 to Part 774 (the Commerce Control List), Category 6, ECCN 6A006 is amended by adding at the end of the License Exception section, a new License Exception STA paragraph to read as follows:

6A006 "Magnetometers", "magnetic gradiometers", "intrinsic magnetic gradiometers", underwater electric field sensors, "compensation systems", and specially designed components therefor, as follows (see List of Items Controlled).

* * * * *

License Exceptions

* * * * *

STA: Paragraph (c)(2) of License Exception STA (§ 740.20(c)(2)) of the EAR may not be used for any commodity in:

6A006.a.1; or

6A006.a.2; or

6A006.c.1 "Magnetic gradiometers" using multiple "magnetometers" specified by 6A006.a.1 or 6.A006.a.2; or

6A006.d.

* * * * *

39. In Supplement No. 1 to Part 774 (the Commerce Control List), Category 6, ECCN 6A008 is amended by adding at the end of the License Exception section, a new License Exception STA paragraph to read as follows:

6A008 Radar systems, equipment and assemblies, having any of the following (see List of Items Controlled), and specially designed components therefor.

* * * * *

License Exceptions

* * * * *

STA: Paragraph (c)(2) of License Exception STA (§ 740.20(c)(2)) of the EAR may not be used for any commodity in 6A008.d, 6A008.h, 6A008.k or 6A008.l.3.

* * * * *

40. In Supplement No. 1 to Part 774 (the Commerce Control List), Category 6, ECCN 6B008 is amended by adding at the end of the License Exception section, a new License Exception STA paragraph to read as follows:

6B008 Pulse radar cross-section measurement systems having transmit pulse widths of 100 ns or less, and specially designed components therefor.

* * * * *

License Exceptions

* * * * *

STA: Paragraph (c)(2) of License Exception STA (§ 740.20(c)(2)) of the EAR may not be used for any commodity in this entry.

* * * * *

41. In Supplement No. 1 to Part 774 (the Commerce Control List), Category 6, ECCN 6D001 is amended by adding at the end of the License Exception section, a new License Exception STA paragraph to read as follows:

6D001 "Software" specially designed for the "development" or "production" of equipment controlled by 6A004, 6A005, 6A008 or 6B008.

* * * * *

License Exceptions

* * * * *

STA: Paragraph (c)(2) of License Exception STA (§ 740.20(c)(2)) of the EAR may not be used for "software" specially designed for the "development" or "production" of equipment specified by ECCNs 6A004.c, 6A004.d, 6A008.d, 6A008.h, 6A008.k, 6A008.1.3, or 6B008.

* * * * *

42. In Supplement No. 1 to Part 774 (the Commerce Control List), Category 6, ECCN 6D003 is amended by adding at the end of the License Exception section, a new License Exception STA paragraph to read as follows:

6D003 Other "software" as follows (see List of Items Controlled).

* * * * *

License Exceptions

* * * * *

STA: Paragraph (c)(2) of License Exception STA (§ 740.20(c)(2)) of the EAR may not be used for software in 6D003.a.

* * * * *

43. In Supplement No. 1 to Part 774 (the Commerce Control List), Category 6, ECCN 6E001 is amended by adding at the end of the License Exception section, a new License Exception STA paragraph to read as follows:

6E001 "Technology" according to the General Technology Note for the "development" of equipment, materials or "software" controlled by 6A (except 6A991, 6A992, 6A994, 6A995, 6A996, 6A997, or 6A998), 6B (except 6B995), 6C (except 6C992 or 6C994), or 6D (except 6D991, 6D992, or 6D993).

* * * * *

License Exceptions

* * * * *

STA: Paragraph (c)(2) of License Exception STA (§ 740.20(c)(2)) of the EAR may not be used for any technology in this entry.

* * * * *

44. In Supplement No. 1 to Part 774 (the Commerce Control List), Category 6, ECCN 6E002 is amended by adding at the end of the License Exception section, a new License Exception STA paragraph to read as follows:

6E002 "Technology" according to the General Technology Note for the "production" of equipment or materials controlled by 6A (except 6A991, 6A992, 6A994, 6A995, 6A996, 6A997 or 6A998), 6B (except 6B995) or 6C (except 6C992 or 6C994).

* * * * *

License Exceptions

* * * * *

STA: Paragraph (c)(2) of License Exception STA (§ 740.20(c)(2)) of the EAR may not be used for "technology" according to the General Technology Note for the "production" of equipment specified in the STA exclusion paragraphs found in the License Exception sections of by ECCNs 6A001, 6A002, 6A003, 6A004, 6A006, 6A008, or 6B008.

* * * * *

45. In Supplement No. 1 to Part 774 (the Commerce Control List), Category 7, ECCN 7D002 is amended by adding at the end of the License Exception section, a new License Exception STA paragraph to read as follows:

7D002 "Source code" for the "use" of any inertial navigation equipment, including inertial equipment not controlled by 7A003 or 7A004, or Attitude and Heading Reference Systems ('AHRS').

* * * * *

License Exceptions

* * * * *

STA: Paragraph (c)(2) of License Exception STA (§ 740.20(c)(2)) of the EAR may not be used for any software in this entry.

* * * * *

46. In Supplement No. 1 to Part 774 (the Commerce Control List), Category 7, ECCN 7D003 is amended by adding at the end of the License Exception section, a new License Exception STA paragraph to read as follows:

7D003 Other "software" as follows (see List of Items Controlled).

* * * * *

License Exceptions

* * * * *

STA: Paragraph (c)(2) of License Exception STA (§ 740.20(c)(2)) of the EAR may not be used for software in 7D003.a, b, c, d.1 to d.4 or d.7.

* * * * *

47. In Supplement No. 1 to Part 774 (the Commerce Control List), Category 7, ECCN 7E001 is amended by adding at the end of the License Exception section, a new License Exception STA paragraph to read as follows:

7E001 "Technology" according to the General Technology Note for the "development" of equipment or "software", controlled by 7A (except 7A994), 7B (except 7B994) or 7D (except 7D994).

* * * * *

License Exceptions

* * * * *

STA: Paragraph (c)(2) of License Exception STA (§ 740.20(c)(2)) of the EAR may not be used for any technology in this entry.

* * * * *

48. In Supplement No. 1 to Part 774 (the Commerce Control List), Category 7, ECCN 7E002 is amended by adding at the end of the License Exception section, a new License Exception STA paragraph to read as follows:

7E002 "Technology" according to the General Technology Note for the

"production" of equipment controlled by 7A (except 7A994) or 7B (except 7B994).

* * * * *

License Exceptions

* * * * *

STA: Paragraph (c)(2) of License Exception STA (§ 740.20(c)(2)) of the EAR may not be used for any technology in this entry.

* * * * *

49. In Supplement No. 1 to Part 774 (the Commerce Control List), Category 8, ECCN 8A001 is amended by adding at the end of the License Exception section, a new License Exception STA paragraph to read as follows:

8A001 Submersible vehicles and surface vessels, as follows (see List of Items Controlled).

* * * * *

License Exceptions

* * * * *

STA: Paragraph (c)(2) of License Exception STA (§ 740.20(c)(2)) of the EAR may not be used for any commodity in 8A001.b, 8A001.c or 8A001.d.

* * * * *

50. In Supplement No. 1 to Part 774 (the Commerce Control List), Category 8, ECCN 8A002 is amended by adding at the end of the License Exception section, a new License Exception STA paragraph to read as follows:

8A002 Marine systems, equipment and components, as follows (see List of Items Controlled).

* * * * *

License Exceptions

* * * * *

STA: Paragraph (c)(2) of License Exception STA (§ 740.20(c)(2)) of the EAR may not be used for any commodity in 8A002.b, h, j, o.3, or p.

* * * * *

51. In Supplement No. 1 to Part 774 (the Commerce Control List), Category 8, ECCN 8D001 is amended by adding at the end of the License Exception section, a new License Exception STA paragraph to read as follows:

8D001 "Software" specially designed or modified for the "development", "production" or "use" of equipment or materials, controlled by 8A (except 8A018 or 8A992), 8B or 8C.

* * * * *

License Exceptions

* * * * *

STA: Paragraph (c)(2) of License Exception STA (§ 740.20(c)(2)) of the EAR may not be used for "software" specially designed for the "development" or "production" of equipment in 8A001.b, 8A001.c, 8A001.d, 8A002.b, 8A002.h, 8A002.j, 8A002.o.3 or 8A002.p.

* * * * *

52. In Supplement No. 1 to Part 774 (the Commerce Control List), Category 8, ECCN 8D002 is amended by adding at the end of the License Exception section, a new License Exception STA paragraph to read as follows:

8D002 Specific "software" specially designed or modified for the "development", "production", repair, overhaul or refurbishing (re-machining) of propellers specially designed for underwater noise reduction.

* * * * *

License Exceptions

* * * * *

STA: Paragraph (c)(2) of License Exception STA (§ 740.20(c)(2)) of the EAR may not be used for any software in this entire entry.

* * * * *

53. In Supplement No. 1 to Part 774 (the Commerce Control List), Category 8, ECCN 8E001 is amended by adding at the end of the License Exception section, a new License Exception STA paragraph to read as follows:

8E001 "Technology" according to the General Technology Note for the "development" or "production" of equipment or materials, controlled by 8A (except 8A018 or 8A992), 8B or 8C.

* * * * *

License Exceptions

* * * * *

STA: Paragraph (c)(2) of License Exception STA (§ 740.20(c)(2)) of the EAR may not be used for "technology" according to the General Technology Note for the "development" or "production" of equipment specified by 8A001.b, 8A001.c, 8A001.d, 8A002.b, 8A002.h, 8A002.j, 8A002.o.3 or 8A002.p.

* * * * *

54. In Supplement No. 1 to Part 774 (the Commerce Control List), Category 8, ECCN 8E002 is amended by adding at the end of the License Exception section, a new License Exception STA paragraph to read as follows:

8E002 Other "technology" as follows (see List of Items Controlled).

* * * * *

License Exceptions

* * * * *

STA: Paragraph (c)(2) of License Exception STA (§ 740.20(c)(2)) of the EAR may not be used for technology in 8E002.a.

* * * * *

55. In Supplement No. 1 to Part 774 (the Commerce Control List), Category 9, ECCN 9B001 is amended by adding at the end of the License Exception section, a new License Exception STA paragraph to read as follows:

9B001 Equipment, tooling and fixtures, specially designed for manufacturing gas turbine blades, vanes or tip shroud castings, as follows (see List of Items Controlled).

* * * * *

License Exceptions

* * * * *

STA: Paragraph (c)(2) of License Exception STA (§ 740.20(c)(2)) of the EAR may not be used for commodities in 9B001.b

* * * * *

56. In Supplement No. 1 to Part 774 (the Commerce Control List), Category 9, ECCN 9D001 is amended by adding at the end of the License Exception section, a new License Exception STA paragraph to read as follows:

9D001 "Software" specially designed or modified for the "development" of equipment or "technology", controlled by 9A (except 9A018, 9A990 or 9A991), 9B (except 9B990 or 9B991) or 9E003.

* * * * *

License Exceptions

* * * * *

STA: Paragraph (c)(2) of License Exception STA (§ 740.20(c)(2)) of the EAR may not be used for "software" specially designed or modified for the "development" of equipment or "technology", specified by ECCNs 9B001.b. or 9E003.a.1, 9E003.a.2 to a.5, 9E003.a.8, or 9E003.h.

* * * * *

57. In Supplement No. 1 to Part 774 (the Commerce Control List), Category 9, ECCN 9D002 is amended by adding at the end of the License Exception section, a new License Exception STA paragraph to read as follows:

9D002 "Software" specially designed or modified for the "production" of equipment controlled by 9A (except 9A018, 9A990, or 9A991) or 9B (except 9B990 or 9B991).

* * * * *

License Exceptions

* * * * *

STA: Paragraph (c)(2) of License Exception STA (§ 740.20(c)(2)) of the EAR may not be used for "software" specially designed or modified for the "production" of equipment specified by 9B001.b.

* * * * *

58. In Supplement No. 1 to Part 774 (the Commerce Control List), Category 9, ECCN 9D004 is amended by adding at the end of the License Exception section, a new License Exception STA paragraph to read as follows:

9D004 Other "software" as follows (see List of Items Controlled).

* * * * *

License Exceptions

* * * * *

STA: Paragraph (c)(2) of License Exception STA (§ 740.20(c)(2)) of the EAR may not be used for software in 9D004.a and 9D004.c.

* * * * *

59. In Supplement No. 1 to Part 774 (the Commerce Control List), Category 9, ECCN 9E001 is amended by adding at the end of the License Exception section, a new License Exception STA paragraph to read as follows:

9E001 "Technology" according to the General Technology Note for the "development" of equipment or "software", controlled by 9A001.b, 9A004 to 9A012, 9B (except 9B990 or 9B991), or 9D (except 9D990 or 9D991).

* * * * *

License Exceptions

* * * * *

STA: Paragraph (c)(2) of License Exception STA (§ 740.20(c)(2)) of the EAR may not be used for any technology in this entry.

* * * * *

60. In Supplement No. 1 to Part 774 (the Commerce Control List), Category 9, ECCN 9E002 is amended by adding at the end of the License Exception section, a new License Exception STA paragraph to read as follows:

9E002 "Technology" according to the General Technology Note for the "production" of equipment controlled by 9A001.b, 9A004 to 9A011 or 9B (except 9B990 or 9B991).

* * * * *

License Exceptions

* * * * *

STA: Paragraph (c)(2) of License Exception STA (§ 740.20(c)(2)) of the EAR may not be used for any technology in this entry.

* * * * *

61. In Supplement No. 1 to Part 774 (the Commerce Control List), Category 9, ECCN 9E003 is amended by adding at the end of the License Exception section, a new License Exception STA paragraph to read as follows:

9E003 Other "technology" as follows (see List of Items Controlled).

* * * * *

License Exceptions

* * *

STA: Paragraph (c)(2) of License Exception STA (§ 740.20(c)(2)) of the EAR may not be used for any technology in 9E003.a.1, 9E003.a.2 to a.5, 9E003.a.8, or 9E003.h.

* * * * *

Dated: December 6, 2010.

Gary Locke,

Secretary of Commerce.

[FR Doc. 2010–30968 Filed 12–8–10; 8:45 am]

BILLING CODE 3510–33–P

DEPARTMENT OF COMMERCE

Bureau of Industry and Security

15 CFR Part 774

[Docket No. 101112562–0577–01]

Commerce Control List: Revising Descriptions of Items and Foreign Availability

AGENCY: Bureau of Industry and Security, Commerce.

ACTION: Advance notice proposed rulemaking.

SUMMARY: As part of the President's export control reform initiative, the Bureau of Industry and Security (BIS) seeks public comments on how the descriptions of items controlled on the Commerce Control List (CCL) of the Export Administration Regulations (EAR) could be more clear and positive and "tiered" in a manner consistent with the control criteria the Administration has developed as part of the reform effort. The request for comments on how items on the CCL could be tiered includes a request for comments on the degree to which a controlled item provides the United States with a critical, substantial, or significant military or intelligence advantage; and the availability of the item outside certain groups of countries.

DATES: Comments must be received by February 7, 2011.

ADDRESSES: Written comments on this notice of inquiry may be sent by e-mail to *publiccomments@bis.doc.gov.* Include "Notice of Inquiry—CCL" in the subject line of the message. Comments may also be submitted by mail or hand delivery to Timothy Mooney, Office of Exporter Services, Regulatory Policy Division, Bureau of Industry and Security, Department of Commerce, 1401 Constitution Avenue, NW., Room 2705, Washington, DC 20230, *ATTN:* Notice of Inquiry—CCL.

FOR FURTHER INFORMATION CONTACT: Timothy Mooney, Regulatory Policy Division, Bureau of Industry and Security, *Telephone:* (202) 482–2440, *E-mail: tmooney@bis.doc.gov.*

SUPPLEMENTARY INFORMATION:

Background

A core task of the Administration's Export Control Reform Initiative is to enhance national security by reviewing and revising, as necessary and to the extent permitted by law and regime obligations, the lists of items (*i.e.,* commodities, software, and technology) controlled for export and reexport so that they (1) are clearer and more "positive" in nature and (2) can more easily be screened into three tiers based upon a set of criteria. The Administration has developed a three-tiered set of criteria to help determine whether a license should be required or a license exception should be available to allow license-free export, reexport, or transfer (in-country) of a given item, with appropriate conditions, to various destinations. The three-tiered set of criteria has two primary elements—(a) the degree to which an item provides the United States with a military or intelligence advantage and (b) the availability of the item outside the United States, its close allies and multilateral export control regime partners.

1. Request for Comments on How To Make the CCL More Clear and "Positive"

a. Background—The Current Commerce Control List and the Reform Effort

The Commerce Control List (CCL), which is in Supplement No. 1 to part 774 of the Export Administration Regulations (EAR) (15 CFR part 774), is the list of items for which BIS controls the export, reexport, and transfer (in-country). The CCL's ten categories identify controlled items by five-character Export Control Classification Numbers (ECCNs). Items that are not listed on the CCL but are still "subject to the EAR" are designated as "EAR99" items.

Most items on the CCL are controlled in accordance with the United States' commitments to the four multilateral export control regimes, *i.e.,* the Wassenaar Arrangement on Export Controls for Conventional Arms and Dual-Use Goods and Technologies, the Missile Technology Control Regime, the Australia Group, and the Nuclear Suppliers Group. Members of the regimes have the discretion to clarify the descriptions of regime-controlled items on their domestic control lists.

BIS also has items on the CCL that are controlled unilaterally by the United States, and thus generally has the authority to clarify the descriptions of those items. For purposes of this notice, a unilaterally controlled item is any item listed on the CCL that is not listed on a control list of one of the four multilateral export control regimes. These unilaterally controlled items are typically listed in the "900" series on the CCL, such as ECCNs 1C998 or 9A980, but many multilaterally controlled items (i.e., items listed in the ECCNs in the "000", "100", "200" and "300" series) also include reasons for control that are unilateral, such as an item in the "000" series that is controlled for national

security (NS) reasons but is also controlled for antiterrorism (AT) reasons.

The CCL is mostly a "positive" control list that describes items using objective criteria, such as qualities to be measured (*e.g.,* accuracy, speed, and wavelength), units of measure (*e.g.,* hertz, horsepower, and microns), or other precise descriptions, rather than broad, open-ended, subjective, catch-all, or design intent-based criteria. However, not all ECCNs contain "positive" descriptions and some descriptions could be clearer and more specific. The Administration wants the lists of items controlled pursuant to export control laws and regulations (*i.e.,* the CCL and the United States Munitions List (USML) (22 CFR part 121) of the International Traffic in Arms Regulations (ITAR) (22 CFR parts 120 through 130)) to be sufficiently "positive," clear, and precise so that persons, including persons who are not knowledgeable about U.S. export controls, who understand the technical parameters, characteristics, and capabilities of an item ordinarily will be able to determine its export control classification and jurisdictional status without needing to consult the government for an interpretation. For these reasons, BIS seeks public comment on how to improve the descriptions of items on the CCL that are unclear or that use vague, open-ended, or subjective criteria.

b. The Types of Comments BIS Seeks Pertaining to the Text of the ECCNs

If possible, suggestions on ways to improve the descriptions of items on the CCL should reflect internationally accepted standards and use industry-standard terms and references. Where objective criteria are missing from ECCNs, BIS seeks specific suggestions on what technical parameters, characteristics, thresholds, and capabilities should be used to describe the item. All suggestions should include proposed revisions to the text of ECCNs or proposed Technical Notes to ECCNs that explain terms or phrases used in the ECCN. Suggestions may include proposed revisions to the text of ECCNs to rearrange the order of words or technical parameters to make the entries more clear. All suggestions should contain an explanation, with supporting materials if available, of why the proposed change is needed to the ECCN and why the proposed changes would make the ECCN more clear and positive than the current ECCN.

2. Request for Comments on the "Tiering" of Items on the CCL

a. Background—The Criteria Used in the Reform Effort for Evaluating Controlled Items

The Administration is considering whether to amend, to the extent permitted by law and U.S. regime obligations, the lists of export controlled items—the CCL and the USML—and related licensing policies to accord with new criteria that focus controls on the most sensitive items. These criteria would place items listed on these two control lists into three tiers. Tier 1 items are (a) weapons of mass destruction (WMD); (b) WMD-capable unmanned delivery system; (c) plants, facilities, or items specially designed for producing, processing, or using WMDs, special nuclear materials, or WMD-capable unmanned delivery systems; or (d) items almost exclusively available from the United States and which provide a critical military or intelligence advantage to the United States. Tier 2 items are almost exclusively available from regime partners or adherents and provide a substantial military or intelligence advantage to the United States, or make a substantial contribution to the indigenous development, production, use, or enhancement of a Tier 1 or Tier 2 item. Tier 3 items are more broadly available and provide a significant military or intelligence advantage to the United States or make a significant contribution to the indigenous development, production, use, or enhancement of a Tier 1, 2, or 3 item, or are otherwise controlled for national security, foreign policy, or human rights reasons. Thus, an aspect of the criteria the Administration has developed is the degree to which a controlled item is available outside of different groups of countries.

The following are definitions of several of the key terms and phrases used in the tiered criteria set forth above. The term "almost exclusively available" means that the item is only available from a very small number of other countries that have in place effective export controls on the item. The term "critical" means providing a capability with respect to which the United States cannot afford to fall to parity and that would pose a grave threat to U.S. national security if not controlled (*i.e.,* a "crown jewel"). Examples of "grave threat to U.S. national security" include: Armed hostilities against the United States or its allies; disruption of foreign relations vitally affecting the national security; the compromise of vital national defense plans or complex crypto-logic and communications intelligence systems; the revelation of sensitive intelligence operations; the disclosure of scientific or technological developments vital to national security; or critical assistance to foreign development or acquisition of WMD.

The term "substantial" means providing a capability with respect to which the United States must maintain parity and that would pose a serious threat to U.S. national security if not controlled. Examples of a "serious threat to the U.S. national security" include: Disruption of foreign relations significantly affecting the national security; substantial impairment of a program or policy directly related to the national security; revelation of significant military plans or intelligence operations; compromise of scientific or technological developments important to national security; or substantial assistance to foreign development or acquisition of a WMD.

The term "significant" means providing a capability that could be reasonably expected to cause damage to U.S. national security if not controlled. Examples of "damage to U.S. national security" include: Disruption of foreign relations affecting the national security; impairment of a program or policy directly related to the national security; revelation of military plans or intelligence operations; compromise of scientific or technological developments relating to national security; or assistance to foreign development or acquisition of a WMD.

The basic premise of this aspect of the Export Control Reform effort is that if an item type falls within the scope of one of the criteria's three tiers, the item should be controlled for export, reexport, and in-country transfer at the level set forth in the licensing policy the U.S. Government is developing for that tier. The licensing policies to be assigned to each tier are still under development but generally, the highest tier of control will carry the most comprehensive license and compliance requirements. If an item is determined not to be within the scope of any of the three tiers, it should not be on a control list. Items that do not meet one of the primary elements of the tiered criteria, such as being significant for maintaining a military or intelligence advantage, that must nonetheless be controlled for a separate foreign policy, statutory, or multilateral obligation, will be identified as Tier 3 items with the required licensing policy.

b. The Types of Information BIS Seeks Regarding the How Items on the CCL Could Be Tiered

As described above, there are two primary aspects to determining how an item on the CCL should be tiered—(i) the degree to which the item provides a military or intelligence advantage to the United States and (ii) its availability outside of certain groups of countries.

i. Request for Comments on How Items on the CCL Could Be Described Based on the Tier Criteria

BIS seeks public comments on whether items on the CCL that are controlled for other than solely Anti-Terrorism (AT) or Crime Control (CC) reasons provide a "critical," "substantial," or "significant" military or intelligence advantage to the United States, as these terms are defined above. This includes a request for comments on how existing ECCNs, down to the subparagraph level, could be further divided so that their descriptions are divided by technical or other objective characteristics consistent with the "critical," "substantial," and "significant" criteria. The U.S. Government will make the final decisions on what types of CCL-listed items are within the scope of any of the three tiers and, thus, may or may not accept suggestions regarding how items should be tiered. Nonetheless, BIS is interested in the public's comments on the issue of how CCL-listed items can be described so that they are distinguished even within ECCNs by tier.

ii. Request for Comments on the Availability of Items on the CCL

BIS also seeks public comments on whether items with the capabilities and characteristics described on the CCL, and controlled for other than solely anti-terrorism (AT) reasons or Crime Control (CC) reasons, are indigenously developed, produced, or enhanced (a) almost exclusively in the United States or (b) in destinations other than Argentina, Australia, Austria, Belgium, Bulgaria, Canada, Croatia, the Czech Republic, Denmark, Estonia, Finland, France, Germany, Greece, Hungary, Iceland, Ireland, Italy, Japan, Latvia, Lithuania, Luxembourg, Netherlands, New Zealand, Norway, Poland, Portugal, Romania, Slovakia, Slovenia, South Korea, Spain, Sweden, Switzerland, Turkey, Ukraine, or the United Kingdom. For purposes of this notice, "enhanced" means that (a) the basic characteristics, such as accuracy, capability, performance, or productivity of the item listed on the CCL are improved to provide greater functionality, and (b) the enhancement is effected in destinations outside the above-listed destinations. Information about the availability of these CCL-listed items will help BIS and the other relevant U.S. Government agencies determine the appropriate tier for these items.

Public comments should do more than merely state that specific items are available outside the United States or this group of countries. Rather, they should include specific, objectively verifiable information regarding the availability—that is, the indigenous development, production, or enhancement of the CCL-listed items. The types of availability information that will be most useful to BIS include, for example, those set out in EAR section 768.6, which are evidence that the item is (i) available-in-fact, (ii) from a non-U.S. source, (iii) in sufficient quantity, and (iv) of comparable quality.

For example, a public comment identifying a CCL-listed item as being manufactured outside the above-listed countries should ideally include (a) information about its foreign manufacturer(s), (b) relevant company catalogues or print-outs from company websites that describe the item's technical capabilities and parameters, and (c) a detailed, documented explanation of why these parameters equal or exceed those contained in the relevant ECCN entry. Company claims that are made in catalogues or Web sites that are based on accepted international standards or other internationally recognized certification authorities are more likely to be useful to BIS than claims that are more difficult to objectively verify.

3. Comments That Are Outside the Scope of This Notice

As a separate regulatory initiative, BIS and the State Department are planning to coordinate on the parallel publishing of proposed rules in the **Federal Register** that would create a definition of the term "specially designed" that would be common within the CCL and that would replace the definition of "specifically designed" in the ITAR. Accordingly, this notice of inquiry does not solicit comments pertaining to the use of this term. In addition, this notice does not seek public comment on whether an item should or should not be controlled on the CCL, whether the United States should ask any of the four export control regimes to change the controls on an item, or whether an item should be controlled differently for export and reexport to different countries. General comments on the overall reform process or the other aspects of current export controls are similarly outside the scope of this inquiry.

Comments should be submitted to BIS as described in the **ADDRESSES** section of this notice by February 7, 2011.

Dated: December 6, 2010.

Kevin J. Wolf,

Assistant Secretary of Commerce for Export Administration.

[FR Doc. 2010–30966 Filed 12–8–10; 8:45 am]

BILLING CODE 3510–33–P

COMMODITY FUTURES TRADING COMMISSION

17 CFR Part 23

RIN 3038–AC96

Reporting, Recordkeeping, and Daily Trading Records Requirements for Swap Dealers and Major Swap Participants

AGENCY: Commodity Futures Trading Commission.

ACTION: Notice of proposed rulemaking.

SUMMARY: The Commodity Futures Trading Commission (Commission or CFTC) is proposing regulations to implement new statutory provisions established under Title VII of the Dodd-Frank Wall Street Reform and Consumer Protection Act (Dodd-Frank Act). Section 731 of the Dodd-Frank Act added new sections 4s(f) and (g) to the Commodity Exchange Act (CEA), which set forth reporting and recordkeeping requirements and daily trading records requirements for swap dealers and major swap participants. The proposed rules would establish the regulatory standards for compliance with these new sections of the CEA.

DATES: Submit comments on or before February 7, 2011.

ADDRESSES: You may submit comments, identified by RIN number 3038–AC96 and Reporting, Recordkeeping, and Daily Trading Records Requirements for Swap Dealers and Major Swap Participants, by any of the following methods:

- *Agency Web site, via its Comments Online process: http://comments.cftc.gov.* Follow the instructions for submitting comments through the Web site.
- *Mail:* David A. Stawick, Secretary of the Commission, Commodity Futures Trading Commission, Three Lafayette Centre, 1155 21st Street, NW., Washington, DC 20581.
- *Hand Delivery/Courier:* Same as mail above.

• *Federal eRulemaking Portal: http://www.regulations.gov.* Follow the instructions for submitting comments. Please submit your comments using only one method.

All comments must be submitted in English, or if not, accompanied by an English translation. Comments will be posted as received to *http://www.cftc.gov.* You should submit only information that you wish to make available publicly. If you wish the Commission to consider information that may be exempt from disclosure under the Freedom of Information Act, a petition for confidential treatment of the exempt information may be submitted according to the established procedures in § 145.9 of the Commissions regulations, 17 CFR 145.9.

The Commission reserves the right, but shall have no obligation, to review, pre-screen, filter, redact, refuse or remove any or all of your submission from *http://www.cftc.gov* that it may deem to be inappropriate for publication, such as obscene language. All submissions that have been redacted or removed that contain comments on the merits of the rulemaking will be retained in the public comment file and will be considered as required under the Administrative Procedure Act and other applicable laws, and may be accessible under the Freedom of Information Act.

FOR FURTHER INFORMATION CONTACT:

Sarah E. Josephson, Associate Director, 202–418–5684, *sjosephson@cftc.gov;* Frank N. Fisanich, Special Counsel, 202–418–5949, *ffisanich@cftc.gov;* or Christopher Hower, Attorney Advisor, 202–418–6703, *chower@cftc.gov;* Division of Clearing and Intermediary Oversight, Commodity Futures Trading Commission, Three Lafayette Centre, 1155 21st Street, NW., Washington, DC 20581.

SUPPLEMENTARY INFORMATION:

I. Background

On July 21, 2010, President Obama signed the Dodd-Frank Act.[1] Title VII of the Dodd-Frank Act[2] amended the Commodity Exchange Act (CEA)[3] to establish a comprehensive regulatory framework to reduce risk, increase transparency, and promote market integrity within the financial system by, among other things: (1) Providing for the registration and comprehensive regulation of swap dealers and major swap participants; (2) imposing clearing and trade execution requirements on standardized derivative products; (3) creating rigorous recordkeeping and real-time reporting regimes; and (4) enhancing the Commission's rulemaking and enforcement authorities with respect to all registered entities and intermediaries subject to the Commission's oversight.

Section 731 of the Dodd-Frank Act amends the CEA by adding a new Section 4s, which sets forth a number of requirements for swap dealers and major swap participants. Specifically, sections 4s(f) and 4s(g) of the CEA establish reporting and recordkeeping requirements and daily trading records requirements for swap dealers and major swap participants.

Section 4s(f)(1) requires swap dealers and major swap participants to "make such reports as are required by the Commission by rule or regulation regarding the transactions and positions and financial condition of the registered swap dealer or major swap participant."[4] Under sections 4s(f)(1)(B)(i) and (ii), the Commission is authorized to prescribe the books and records requirements of "all activities related to the business of swap dealers or major swap participants," regardless of whether or not the entity has a prudential regulator. All books and records shall be open to inspection and examination by any representative of the Commission, and under section 4s(f)(1)(D), books and records relating to security-based swap agreements also must be open to inspection and examination by the Securities and Exchange Commission.

Section 4s(g)(1) requires that swap dealers and major swap participants "maintain daily trading records of the swaps of the registered swap dealer and major swap participant and all related records (including related cash and forward transactions) and recorded communications, including electronic mail, instant messages, and recordings of telephone calls." Section 4s(g)(3) requires that daily trading records for each swap transaction be identifiable by counterparty, and section 4s(g)(4) specifies that swap dealers and major swap participants maintain a "complete audit trail for conducting comprehensive and accurate trade reconstructions."

The Commission would adopt the regulations discussed below pursuant to authority granted under sections 4s(h)(1)(D), 4s(h)(3)(D), 4s(f), 4s(g), and 8a(5) of the CEA.[5] The Dodd-Frank Act requires the Commission to promulgate these provisions by July 15, 2011.

The proposed regulations reflect consultation with staff of the following agencies: (i) The Securities and Exchange Commission; (ii) the Board of Governors of the Federal Reserve System; (iii) the Office of the Comptroller of the Currency; and (iv) the Federal Deposit Insurance Corporation. Staff from each of these agencies has had the opportunity to provide oral and/or written comments to the proposal, and the proposed regulations incorporate elements of the comments provided.

The Commission requests comment on all aspects of the proposed regulations, as well as comment on the specific provisions and issues highlighted in the discussion below. The Commission further requests comment on an appropriate effective date for final regulations, including comment on whether it would be appropriate to have staggered or delayed effective dates for some regulations based on the nature or characteristics of the activities or entities to which they apply. Moreover, the Commission recognizes that there will be differences in the size and scope of the business of particular swap dealers and major swap participants. Therefore, comments are solicited on whether certain provisions of the proposed regulations should be modified or adjusted to reflect the differences among swap dealers and major swap participants.

II. Proposed Regulations

A. General Records Requirements

Section 4s(f)(1)(B) of the CEA requires registered swap dealers and major swap participants to keep records of all activities related to their business. Section 4s(f)(2) directs the Commission to adopt rules governing recordkeeping for swap dealers and major swap participants.

Proposed § 23.201 sets forth the records swap dealers and major swap participants must maintain. The records required under the proposed rule would include full and complete swap transaction information, including all documents on which swap information is originally recorded. Under proposed § 23.201(a)(1), such records would be required to be maintained in a manner

[1] *See* Dodd-Frank Wall Street Reform and Consumer Protection Act, Public Law 111–203, 124 Stat. 1376 (2010). The text of the Dodd-Frank Act may be accessed at *http://www.cftc.gov/LawRegulation/OTCDERIVATIVES/index.htm.*

[2] Pursuant to Section 701 of the Dodd-Frank Act, Title VII may be cited as the "Wall Street Transparency and Accountability Act of 2010."

[3] 7 U.S.C. 1 *et seq.*

[4] Recordkeeping related to the swap dealer's or major swap participant's financial condition reports will be prescribed in separate rulemaking proposals and are not included in the proposed rules below.

[5] Section 8a(5) of the CEA authorizes the Commission to promulgate such regulations as, in the judgment of the Commission, are reasonably necessary to effectuate any of the provisions or to accomplish any of the purposes of the CEA.

that is identifiable and searchable by transaction and by counterparty. The rule would require retention of all documents customarily generated in accordance with market practice that demonstrate the existence and nature of the transaction.

Proposed § 23.201(a)(2) would require retention of records of each position held by the swap dealer or major swap participant, identified by product and counterparty. Position records would be required to be linked to transaction records in a manner that permitted identification of the transaction that established the position. Position information would be retained in accordance with Commission regulations under part 45, which provides for unique product identifiers and unique counterparty identifiers.

Proposed § 23.201(a)(3) would require swap dealers and major swap participants to maintain records for transactions executed on a swap execution facility (SEF) or designated contract market (DCM) or cleared by a derivatives clearing organization (DCO). It should be noted, that for transactions that are executed on a SEF or DCM, or cleared on a DCO, many of the requirements of the daily trading record rule, described below, would be easily achieved through procedures established by the SEF, DCM, or DCO (*e.g.,* confirming the transaction, valuing the transaction, or margining the position).

Proposed § 23.201(b) would require that swap dealers and major swap participants keep basic business records, including, among other things, minutes from meetings of the entity's governing body, organizational charts, and documentation of audits conducted. Additionally, certain financial records,[6] records of complaints [7] against personnel, and marketing materials would be required to be kept. Under proposed § 23.201(c), swap dealers and major swap participants would be required to maintain records of information required to be submitted to a swap data repository.

Finally, under proposed § 23.201(d) swap dealers and major swap participants would be required to maintain records of information required to be reported on a real-time public basis and records of information relating to large notional swaps in accordance with proposed part 43 and CEA section 2(a)(13).[8] Specifically, with regard to large notional swaps, swap dealers and major swap participants should retain a record of the rationale for determining that the swap is a large notional swap in accordance with new part 43 of the Commission regulations. Additionally, for the purposes of real-time reporting under part 43, if less specific information relating to a required data field is reported to protect the identities of the parties to a swap (*e.g.,* underlying asset or tenor), a swap dealer or major swap participant must retain a record of the rationale for why reporting less specific information is necessary to protect the anonymity of the parties to the swap.

The Commission requests comment on all aspects of proposed § 23.201. In particular, the Commission solicits comment on the following questions:

- Should the Commission provide greater specificity on the requirement that transaction records be kept in a form and manner identifiable and searchable by transaction and counterparty?
- Are there additional types of records that should be required to be kept by swap dealers and major swap participants? For example, should drafts of documents be kept?

B. Daily Trading Records

Section 4s(g)(1) of the CEA requires that swap dealers and major swap participants maintain daily trading records of their swaps and "all related records (including related cash and forward transactions)." This section also requires that swap dealers and major swap participants maintain recorded communications, including electronic mail, instant messages, and recordings of telephone calls. Section 4s(g)(2) provides that the daily trading records shall include such information as the Commission shall require by rule or regulation. Section 4s(g)(3) requires that daily trading records for each swap transaction be identifiable by counterparty, and section 4s(g)(4) specifies that swap dealers and major swap participants maintain a "complete audit trail for conducting comprehensive and accurate trade reconstructions."

Proposed § 23.202 would prescribe daily trading record requirements, which would include trade information related to pre-execution, execution, and post-execution data. Proposed § 23.202(a) would require swap dealers and major swap participants to ensure (1) that they preserve all information necessary to conduct a comprehensive and accurate trade reconstruction for each swap, and (2) that they maintain each transaction record as a separate electronic file identifiable and searchable by transaction and counterparty.

Proposed § 23.202(a)(1) would require registrants to keep pre-execution trade information. This would include records of all oral and written communications that lead to the execution of a swap, whether communicated by telephone, voicemail, facsimile, instant messaging, chat rooms, electronic mail, mobile device, or other digital or electronic media. This rule would require swap dealers and major swap participants to maintain recordings of telephone calls and other communications created in the normal course of its business, but would not establish an affirmative new requirement to create recordings of all telephone conversations if the complete audit trail requirement can be met through other means, such as electronic messaging or trading.

Significant technological advancements in recent years, particularly with respect to the cost of capturing and retaining copies of electronic material, including telephone communications, have made the prospect of establishing recordkeeping requirements for digital and electronic communications more economically feasible and systemically prudent. Evidence of these trends was examined in March 2008 by the United Kingdom's Financial Services Authority ("FSA"), which studied the issue of mandating the recording and retention of voice conversations and electronic communications.[9] The FSA issued a Policy Statement detailing its findings and ultimately implemented rules relating to the recording and retention of such communications, including a recent determination that all financial service firms will be required to record any relevant communication by

[6] Financial condition reporting, including reporting for compliance with capital rules, will be proposed in a separate rulemaking.

[7] A complaint is defined in proposed rule 23.200 as any formal or informal complaint, grievance, criticism, or concern communicated to the swap dealer or major swap participant in any format relating to, arising from, or in connection with, any trading conduct or behavior or with the swap dealer or major swap participant's performance (or failure to perform) any of its regulatory obligations, and includes any and all observations, comments, remarks, interpretations, clarifications, notes, and examinations as to such conduct or behavior communicated or documented by the complainant, swap dealer, or major swap participant.

[8] The proposed real-time reporting rules under part 43 are available on the Commission's Web site at *http://www.cftc.gov.*

[9] Financial Services Authority, "Policy Statement: Telephone Recording: recording of voice conversations and electronic communications," (March 2008).

employees on their work cell phones.[10] Similar rules that mandate recording of certain voice and/or telephone conversations have been promulgated by the Hong Kong Securities and Futures Commission [11] and by the Autorité des Marchés Financiers in France,[12] and have been recommended by the International Organization of Securities Commissions (IOSCO).[13]

While technological advancements have made capturing and retaining such material more economically feasible, modern technologies likewise have altered the methods by which market participants conduct their business, especially the means through which such persons communicate solicitations, bids, offers, orders, instructions, trading, and prices.

On February 5, 2009, the Commission's Division of Market Oversight (DMO) issued an advisory, which made clear that the existing language of § 1.35 of the Commission's regulations "appl[ies] to records that are created or retained in an electronic format, including e-mail, instant messages, and other forms of communication created or transmitted electronically for all trading." [14] The advisory, which specifically addresses the Commission's recordkeeping requirements as applicable to futures commission merchants, introducing brokers, and DCM members, states that "[t]he Commission's recordkeeping regulations, by their terms, do not distinguish between whatever medium is used to record the information covered by the regulations, including e-mails, instant messages, and any other form of communication created or transmitted electronically."

It is also noteworthy that the Commission's enforcement success in cases involving market manipulation and false reporting often has correlated directly with the existence of high-quality recordings of voice communications and of electronic communications between the persons involved. Conversely, the Commission's enforcement capabilities have been limited in cases where such voice recordings and copies of electronic communications were not available.

Accordingly, the Commission is proposing § 23.202(a)(1), which would require swap dealers and major swap participants to maintain records of all communications provided or received concerning information that leads to the execution of a swap, whether conveyed by telephone, voicemail, facsimile, instant messaging, chat rooms, electronic mail, mobile device, or other digital or electronic media. As noted above, the proposed § 23.202(a) would require that each recorded communication be maintained as a separate electronic file identifiable and searchable by transaction and counterparty.

The Commission solicits comments on the potential costs and effects of requiring that all pre-execution communications be recorded. Additionally, the Commission requests comment on whether it should require a record of the source of quotations, including the source of any input if the quotation is generated by a formula or model. Comments also are requested regarding whether the retention period for pre-execution communications should be shorter than the retention period applicable to other business records.

Proposed § 23.202(a)(2) would require the recording of execution information, including all terms of each swap and the date and time, to the nearest minute, that the swap was executed. Post-execution data, such as records of all confirmations, reconciliations, and margining of swaps would be required under proposed § 23.202(a)(3). The collateralization of risk exposure resulting from the business of the swap dealer or major swap participant would be recorded under § 23.202(a)(4).

Proposed § 23.202(b) would require that swap dealers and major swap participants retain information of cash or forward transactions that are related to swaps as required by section 4s(g)(1). Proposed § 23.200 defines a related cash or forward transaction as "a purchase or sale for immediate or deferred physical shipment or delivery of an asset related to a swap where the swap and the related cash or forward transaction are used to hedge, mitigate the risk of, or offset one another." The recordkeeping requirements for related cash and forward transactions generally track the same requirements as swaps. The Commission believes that requiring one approach to recordkeeping will be simpler for swap dealers and major swap participants to implement and will provide the Commission with information necessary for its regulatory oversight.

The Commission requests comment on all aspects of proposed § 23.202. With respect to records regarding related cash and forward transactions, the Commission solicits comment upon whether the Commission has provided sufficient clarity concerning what type of information would be required to be retained. The Commission also requests comment on whether it should require swap dealers and major swap participants to keep records related to high frequency trading, and what the nature of those records should be.

C. Retention and Inspection of Records

Proposed § 23.203 prescribes the form and manner in which records shall be retained, and prescribes the period of time for which maintenance of records is required. Generally speaking, § 23.203 corresponds to the recordkeeping requirements of § 1.31 insofar as records are required to be kept for a period of at least 5 years, and shall be readily accessible for the first two years of that period.

Proposed § 23.203(a) would require that records be kept at the principal place of business of the swap dealer or major swap participant. If the principal place of business is outside of the United States, then the swap dealer or major swap participant must provide the requested records at a place designated by a representative of the Commission within 72 hours of receiving the request.

Proposed § 23.203(b) would require that all records be maintained in accordance with § 1.31 of the Commission's regulations, except that records of, or related to, each swap transaction be retained until the termination, maturity, expiration, transfer, assignment, or novation of the swap, and for five years after such time. In other words, the swap dealer or major swap participant must maintain records for the life of the swap or the period in which the entity holds the position on its books (whichever is shorter), plus five additional years. Additionally, records of any swap data must be maintained in accordance with requirements under part 45, which was recently proposed by the Commission.[15]

[10] Julia Werdigier, "Britain to Tape Traders' Cell Phones to Fight Fraud," *New York Times* (Nov. 12, 2010).

[11] Code of Conduct for Persons Licensed by or Registered with the Securities and Futures Commission para. 3.9 (2010) (H.K.).

[12] General Regulation of the Autorité des Marchés Financiers art. 313–51 (2010) (Fr.).

[13] Press Release, International Organization of Securities Commissions, "IOSCO Publishes Recommendations to Enhance Commodity Futures Markets Oversight," (Mar. 5, 2009), *http://www.iosco.org/news/pdf/IOSCONEWS137.pdf.* The IOSCO members on the committee formulating the recommendations included Brazil, Canada (Ontario and Quebec), Dubai, France, Germany, Hong Kong, Italy, Japan, Norway, Switzerland, the United Kingdom, and the United States.

[14] A copy of the advisory, titled "Advisory for Futures Commission Merchants, Introducing Brokers, and Members of a Contract Market over Compliance with Recordkeeping Requirements," is available on the Commission's Web site at *http://www.cftc.gov.*

[15] The proposed rules under part 45 are available on the Commission's Web site at *http://www.cftc.gov.*

In addition to any other comments on retention and inspection requirements, the Commission requests comment on the approach it has proposed for the retention of swap data.

D. Reports to Swap Data Repositories and Real-time Public Reporting

Section 4(s)(f)(1)(A) of the CEA requires each registered swap dealer and major swap participant to make such reports as are required by the Commission by rule or regulation regarding the transactions and positions and financial condition of the registered swap dealer or major swap participant.

Proposed § 23.204 implements the reporting requirements of Commission rules to be prescribed under CEA section 4r(a) related to reporting of swaps to a swap data repository. Proposed § 23.205 implements the reporting requirements of Commission rules to be prescribed under CEA section 2(a)(13) related to real-time public reporting of swap transactions and pricing data.[16] Each of the reports required under the proposed rules would assist the Commission to monitor the swap markets and the operations of swap dealers and major swap participants and to enforce their compliance with the Commission's rules.

III. Related Matters

A. Regulatory Flexibility Act

The Regulatory Flexibility Act (RFA)[17] requires that agencies consider whether the rules they propose will have a significant economic impact on a substantial number of small entities. The Commission previously has established certain definitions of "small entities" to be used in evaluating the impact of its regulations on small entities in accordance with the RFA.[18] The proposed rules would affect swap dealers and major swap participants.

Swap dealers and major swap participants are new categories of registrants. Accordingly, the Commission has not previously addressed the question of whether such persons are, in fact, small entities for purposes of the RFA. The Commission previously has determined, however, that futures commission merchants are not small entities for purposes of the RFA.[19] The Commission's determination was based, in part, upon the obligation of futures commission merchants to meet the minimum financial requirements established by the Commission to enhance the protection of customers' segregated funds and protect the financial condition of futures commission merchants generally.[20] Like futures commission merchants, swap dealers will be subject to minimum capital and margin requirements and are expected to comprise the largest global financial firms. In addition, the Commission is required to exempt from swap dealer designation any entities that engage in a *de minimis* level of swaps dealing in connection with transactions with or on behalf of customers. The Commission anticipates that this exemption would exclude small entities from registration. For essentially the same reasons that futures commission merchants have previously been determined not to be small entities and in light of the exemption from the definition of swap dealer for those engaging in a *de minimus* level of swap dealing, the Commission is hereby proposing that swap dealers not be considered "small entities" for purposes of the RFA for this rulemaking.

The Commission also has determined previously that large traders are not "small entities" for RFA purposes.[21] In that determination, the Commission considered that a large trading position was indicative of the size of the business. Major swap participants, by statutory definition, maintain substantial positions in swaps or maintain outstanding swap positions that create substantial counterparty exposure that could have serious adverse effects on the financial stability of the United States banking system or financial markets. Accordingly, for purposes of the RFA for this rulemaking, the Commission is hereby proposing that major swap participants not be considered "small entities" for essentially the same reasons that large traders have previously been determined not to be small entities.

Moreover, the Commission is carrying out Congressional mandates by proposing this regulation. Specifically, the Commission is proposing these regulations to comply with the Dodd-Frank Act, the aim of which is to reduce systemic risks presented by swap dealers and swap market participants through comprehensive regulation. The Commission does not believe that there are regulatory alternatives to those being proposed that would be consistent with the statutory mandate. Accordingly, the Chairman, on behalf of the Commission, hereby certifies pursuant to 5 U.S.C. 605(b) that the proposed rules will not have a significant economic impact on a substantial number of small entities.

B. Paperwork Reduction Act

The Paperwork Reduction Act (PRA)[22] imposes certain requirements on Federal agencies (including the Commission) in connection with their conducting or sponsoring any collection of information as defined by the PRA. This proposed rulemaking would result in new collection of information requirements within the meaning of the PRA. The Commission therefore is submitting this proposal to the Office of Management and Budget (OMB) for review in accordance with 44 U.S.C. 3507(d) and 5 CFR 1320.11. The title for this collection of information is "Reporting, Recordkeeping, and Daily Trading Records Requirements for Swap Dealers and Major Swap Participants." An agency may not conduct or sponsor, and a person is not required to respond to, a collection of information unless it displays a currently valid control number. The OMB has not yet assigned this collection a control number.

The collection of information under these proposed regulations is necessary to implement certain provisions of the CEA, as amended by the Dodd-Frank Act. Specifically, it is essential to ensuring that each swap dealer and major swap participant maintains records of all the activities related to its business including, but not limited to, daily trading records and transaction reporting as required by section 4s(f) of the Act. The recordkeeping requirement also is necessary for a complete audit trail to conduct comprehensive and accurate trade reconstructions. Commission staff would use the information required to be preserved or reported when conducting the Commission's examination and oversight program with respect to the applicable registrants.

If the proposed regulations are adopted, responses to this collection of information would be mandatory. The Commission will protect proprietary information according to the Freedom of Information Act and 17 CFR part 145, "Commission Records and Information." In addition, section 8(a)(1) of the CEA strictly prohibits the Commission, unless specifically authorized by the CEA, from making public "data and information that would separately disclose the business transactions or market positions of any person and

[16] In a recent release of proposed Part 43 and pursuant to CEA section 2(a)(13)(A), reporting parties, for the purposes of real-time public reporting, will be obligated to report certain data fields relating to swaps "as soon as technologically practicable" following the execution of a swap.

[17] 5 U.S.C. 601 *et seq.*

[18] 47 FR 18618, Apr. 30, 1982.

[19] *Id.* at 18619.

[20] *Id.*

[21] *Id.* at 18620.

[22] 44 U.S.C. 3501 *et seq.*

trade secrets or names of customers." The Commission is also required to protect certain information contained in a government system of records according to the Privacy Act of 1974, 5 U.S.C. 552a.

1. Information Provided by Reporting Entities/Persons

Swap dealers and major swap participants would be required to comply with the recordkeeping requirements of §§ 23.201, 23.202, and 23.203 and the reporting requirements of §§ 23.204 and 23.205. The proposed regulations generally would require swap dealers and major swap participants to keep transaction and position records of their swaps (including daily trading records of swaps and related cash and forward transactions); to maintain specified business records (including records related to the swap dealer's or major swap participant's governance, financial status, and complaints); to report certain swap transaction data to swap data repositories; to satisfy certain real time public reporting requirements; and to maintain records of information reported to swap data repositories and for real time public reporting purposes.

The annual burden associated with these proposed regulations is estimated to be 2,096 hours, at an annual cost of $209,600 for each swap dealer and major swap participant. Burden means the total time, effort, or financial resources expended by persons to generate, maintain, retain, disclose, or provide information to or for a federal agency. This hourly burden primarily results from the recordkeeping obligations that would be imposed by proposed §§ 23.201 and 23.202.

Specifically, the Commission anticipates that swap dealers and major swap participants will spend approximately eight hours per trading day (2,016 hours per year) compiling and maintaining transaction records, including daily trading records. The Commission believes that swap dealers and major swap participants already maintain the vast majority of the required transaction records (particularly execution and post-execution records) as part of their customary and usual business practices and that any additional expenditure generally would be limited to the costs associated with developing and preserving certain pre-execution data and communications set forth in proposed § 23.202, which currently may not be kept by affected registrants (for example, records of oral and written communications and records related to quotes, bids, and offers) as well as the time required to input any unique transaction terms into electronic recordkeeping systems. The Commission believes that registrants will expend an additional 63 hours per year compiling daily records of their positions, identified by product and counterparty, as required by proposed § 23.201.

The Commission estimates that each swap dealer and major swap participant will spend 5 hours per year compiling the complaint records required by the proposed regulations. This approximation is based on the belief that the affected registrants primarily engage in principal to principal transactions, which are less likely to generate complaints than transactions conducted on an agency basis. It also assumes that most registrants possess pre-existing complaint recordkeeping systems and thus, any hourly burden imposed would be limited to the time required to document and retain the specific complaint information mandated by the rule that is not already kept. Finally, the Commission estimates the hourly burden associated with compliance with the marketing communication recordkeeping requirement to be approximately 12 hours per year. The Commission expects that swap dealers and market participants presently maintain records of most of their marketing presentations, advertisements, sales literature, and marketing communications as part of their customary business practices and, thus, any new hourly burden is limited to the requirement to maintain a record of compliance with relevant marketing regulations.

The Commission believes that several aspects of the rule would not result in any additional hourly burdens upon affected registrants. For example, the required records of transactions executed on a swap execution facility or designated contract market or transactions cleared by a designated clearing organization would be the same transaction and daily trading records accounted for previously and, therefore, have not been assigned an extra hourly burden. The Commission also expects that swap dealers and major swap participants currently make and/or maintain their meeting minutes; organizational charts; the resumes of relevant managers; records of their assets, liabilities, income, and expenses; and other governance or financial records in the ordinary course of their businesses.

Finally, the Commission does not anticipate that the requirements to report swap transactions to swap data repositories in accordance with proposed § 23.204, to engage in real time public reporting of swap transaction and pricing data in accordance with proposed § 23.205, and to maintain the electronic systems and procedures necessary to report transactions and data in the manner required by the regulations would result in any additional hourly burdens or costs to swap dealers and major swap participants other than those set forth in the recently proposed part 45 regulations for swap data recordkeeping and reporting [23] and in the recently proposed part 43 regulations governing real-time public reporting of swap transaction data [24] promulgated as part of the Commission's implementation of the Dodd-Frank Act.

It is not currently known how many swap dealers and major swap participants will become subject to these rules, and this will not be known to the Commission until the registration requirements for these entities become effective after July 16, 2011, the date on which the Dodd-Frank Act becomes effective. The Commission believes that there are likely to be approximately 200 swap dealers and 50 major swap participants that would be required to register with the Commission. It has chosen to take a more conservative approach for PRA purposes, however, and has estimated that there will be a combined number of 300 swap dealers and major swap participants who will be required to comply with the recordkeeping and reporting obligations imposed by the proposed regulations. The Commission estimated the number of affected entities based on industry data.

According to recent Bureau of Labor Statistics, the mean hourly wage of an

[23] The proposed rules are available on the Commission's Web site at *http://www.cftc.gov*. The Commission has estimated the average hour burden incurred by swap dealers and major swap participants in connection with reporting to swap data repositories to be 2,080 hours. This estimate was based upon the assumption that a significant number of swap dealers and major swap participants would dedicate the equivalent of at least one full time employee to ensuring compliance with the relevant reporting obligations (2,080 hours = 52 weeks × 5 days × 8 hours). The Commission noted that it believed this assumption to be reasonable due to the volume of swap transactions to be processed by such entities, the information required by proposed regulations and the frequency with which reports would be made. The Commission also estimated the cost of the obligation to report a unique swap identifier to other registered entities and swap participants to be 6 annual burden hours per entity and the estimated cost of reporting their ownership and affiliation information into a confidential database to be 2 hours per entity.

[24] The Commission has estimated that swap dealers and major swap participants will incur 2,080 annual burden hours in connection with the real-time reporting requirements.

employee under occupation code 11–3031, "Financial Managers," (which includes operations managers) that is employed by the "Securities and Commodity Contracts Intermediation and Brokerage" industry is $74.41.[25] Because swap dealers and major swap participants include large financial institutions whose operations management employees' salaries may exceed the mean wage, the Commission has estimated the cost burden of these proposed regulations based upon an average salary of $100 per hour.

Accordingly, the estimated hour burden was calculated as follows:

Recordkeeping: Transaction Records (including Daily Trading Records)

Number of registrants: 300.

Frequency of collection: Daily.

Estimated number of responses per registrant: 252 [252 trading days].

Estimated aggregate number of responses: 75,600 [300 registrants × 252 trading days].

Estimated annual burden per registrant: 2,016 hours [252 trading days × 8 hours per trading day].

Estimated aggregate annual hour burden: 604,800 hours [300 registrants × 252 trading days × 8 hours per trading day].

Recordkeeping: Position Records

Number of registrants: 300.

Frequency of collection: Daily.

Estimated number of responses per registrant: 252 [252 trading days].

Estimated aggregate number of responses: 75,600 [300 registrants × 252 trading days].

Estimated annual burden per registrant: 63 hours [252 trading days × .25 hours per record].

Estimated aggregate annual hour burden: 18,900 hours [300 registrants × 252 trading days × .25 hours per record].

Recordkeeping: Complaints

Number of registrants: 300.

Frequency of collection: As needed.

Estimated number of responses per registrant: 5.

Estimated aggregate number of responses: 1,500 [300 registrants × 5 complaints per registrant].

Estimated annual burden per registrant: 5.

Estimated aggregate annual hour burden: 1,500 [300 registrants × 5 complaints per registrant].

Recordkeeping: Marketing Communications

Number of registrants: 300.

Frequency of collection: As needed.

Estimated number of responses per registrant: 12 (monthly compilation of records).

Estimated aggregate number of responses: 3,600 [300 registrants × 12 monthly compilations].

Estimated annual burden per registrant: 12 hours [1 hour × 12 months].

Estimated aggregated annual hour burden: 3,600 [300 registrants × 12 monthly compilations].

Based upon the above, the aggregate hour burden cost for all registrants is 628,800 burden hours and $62,880,000 [628,800 × $100 per hour].

In addition to the per hour burden discussed above, the Commission anticipates that swap dealers and major swap participants may incur certain start-up costs in connection with the proposed recordkeeping obligations. Such costs would include the expenditures related to developing and installing new technology or re-programming or updating existing recordkeeping technology and systems to enable the swap dealer or major swap participant to collect, capture, process, maintain, and re-produce any newly required records. The Commission believes that swap dealers and major swap participants generally could adapt their current infrastructure to accommodate the new or amended technology and thus no significant infrastructure expenditures would be needed. The Commission estimates the programming burden hours associated with technology improvements to be 160 hours.

According to recent Bureau of Labor Statistics, the mean hourly wages of computer programmers under occupation code 15–1021 and computer software engineers under program codes 15–1031 and 1032 are between $34.10 and $44.94.[26] Because swap dealers and major swap participants generally will be large entities that may engage employees with wages above the mean, the Commission has conservatively chosen to use a mean hourly programming wage of $60 per hour. Accordingly, the start-up burden associated with the required technological improvements would be $9,600 [$60 × 160 hours] per affected registrant or $2,880,000 in the aggregate.

2. Information Collection Comments

The Commission invites the public and other federal agencies to comment on any aspect of the recordkeeping burdens discussed above. The Commission specifically request comment upon its determination that certain of the proposed recordkeeping requirements would not impose any additional information collection burdens upon affected registrants and the appropriateness of the burden hours attributed to other recordkeeping obligations.[27] Pursuant to 44 U.S.C. 3506(c)(2)(B), the Commission solicits comments in order to: (i) Evaluate whether the proposed collection of information is necessary for the proper performance of the functions of the Commission, including whether the information will have practical utility; (ii) evaluate the accuracy of the Commission's estimate of the burden of the proposed collection of information; (iii) determine whether there are ways to enhance the quality, utility, and clarity of the information to be collected; and (iv) minimize the burden of the collection of information on those who are to respond, including through the use of automated collection techniques or other forms of information technology.

Comments may be submitted directly to the Office of Information and Regulatory Affairs, by fax at (202) 395–6566 or by e-mail at *OIRAsubmissions@omb.eop.gov.* Please provide the Commission with a copy of submitted comments so that all comments can be summarized and addressed in the final rule preamble. Refer to the **ADDRESSES** section of this notice of proposed rulemaking for comment submission instructions to the Commission. A copy of the supporting statements for the collections of information discussed above may be obtained by visiting *RegInfo.gov.* OMB is required to make a decision concerning the collection of information between 30 and 60 days after publication of this document in the **Federal Register**. Therefore, a comment is best assured of having its full effect if OMB receives it within 30 days of publication.

C. Cost-Benefit Analysis

Section 15(a) of the CEA [28] requires the Commission to consider the costs and benefits of its actions before issuing a rulemaking under the CEA. By its terms, section 15(a) does not require the Commission to quantify the costs and benefits of a new regulation or to determine whether the benefits of the rule outweigh its costs; rather, it requires that the Commission "consider" the costs and benefits of its actions.

[25] *http://www.bls.gov/oes/current/oes113031.htm.*

[26] *http://www.bls.gov/oes/current/oes113031.htm.*

[27] The Commission notes that, because it has not regulated swap dealers, swap market participants, or the swaps market in the past, it has not previously collected data on the number of particular swap market participants or the average number of daily transactions in which particular types of swaps market participants engage.

[28] 7 U.S.C. 19(a).

Section 15(a) further specifies that costs and benefits of a proposed rulemaking shall be evaluated in light of five broad areas of market and public concern: (1) Protection of market participants and the public; (2) efficiency, competitiveness, and financial integrity of futures markets; (3) price discovery; (4) sound risk management practices; and (5) other public interest considerations. The Commission may, in its discretion, give greater weight to any one of the five enumerated considerations and could, in its discretion, determine that, notwithstanding its costs, a particular regulation was necessary or appropriate to protect the public interest or to effectuate any of the provisions or to accomplish any of the purposes of the CEA.

Summary of proposed requirements. The proposed regulations would implement certain provisions of section 731 of the Dodd-Frank Act, which adds new sections 4s(f) and 4s(g) to the Commodity Exchange Act. The proposed regulations would set forth certain duties imposed upon swap dealers and major swap participants registered with the Commission with regard to recordkeeping and reporting of information and data in connection with such entities' activities in the swap market.

Costs. With respect to costs, the Commission has determined that for swap dealers and major swap participants, costs to institute recordkeeping and reporting systems and personnel in order to satisfy the new regulatory requirements are far outweighed by the benefits to the financial system as a whole. As described above, it is expected that the any additional cost imposed by the recordkeeping requirements of proposed regulations 23.201, 23.202, and 23.203 [29] would be minimal because the information and data required to be recorded is information and data a prudent swap dealer or major swap participant would already maintain during the ordinary course of its business. Moreover, most swap dealers and major swap participants have adequate, existing resources and recordkeeping structures that are capable of adjusting to the new regulatory framework without material diversion of resources away from commercial operations.

Benefits. With respect to benefits, the Commission has determined that the proposed regulations would require a swap dealer or major swap participant to keep records and make reports that will result in reduced risk and greater market integrity in the swap market. Reporting to swap data repositories under 23.204 will provide regulators with a more transparent view of the swap market when such data is aggregated. Such reporting would further the goal of avoiding market disruptions and financial losses to market participants and the general public. Therefore, the Commission believes it is prudent to prescribe recordkeeping and reporting requirements for swap dealers and major swap participants.

The proposed regulations also would promote appropriate back office data management, thereby fostering better risk management. The proposed regulations also would reward efficiency insofar as swap dealers and major swap participants that operate efficiently would have lower operating costs and thus would require fewer resources to comply with the regulations. Finally, the proposed regulations are designed to ensure that swap dealers and major swap participants can sustain their market operations and meet their financial obligations to market participants, thus contributing to the integrity of the financial markets. Therefore, the Commission believes it is prudent to require risk management requirements for swap dealers and major swap participants.

Public Comment. The Commission invites public comment on its cost-benefit considerations. Commentators are also invited to submit any data or other information that they may have quantifying or qualifying the costs and benefits of the proposed rules with their comment letters.

List of Subjects in 17 CFR Part 23

Antitrust, Commodity futures, Conduct standards, Conflict of Interests, Major swap participants, Reporting and recordkeeping, Swap dealers, Swaps.

For the reasons stated in this release, the Commission proposes to amend 17 CFR part 23 as proposed to be added by FR Doc. 2010–29024, published on November 23, 2010 (75 FR 71379) as follows:

PART 23—SWAP DEALERS AND MAJOR SWAP PARTICIPANTS

1. The authority citation for part 23 to read as follows:

Authority: 7 U.S.C. 1a, 2, 6, 6a, 6b, 6b–1, 6c, 6p, 6r, 6s, 6t, 9, 9a, 12, 12a, 13b, 13c, 16a, 18, 19, 21.

2. Subpart F, (consisting of §§ 23.200, 23.201, 23.202, 23.203, 23.204 and 23.205) is added to read as follows:

Subpart F—Reporting, Recordkeeping, and Daily Trading Records Requirements for Swap Dealers and Major Swap Participants

Sec.
23.200 Definitions.
23.201 Required records.
23.202 Daily trading records.
23.203 Records; retention and inspection.
23.204 Reporting to swap data repositories.
23.205 Real-time public reporting.

Subpart F—Reporting, Recordkeeping, and Daily Trading Records Requirements for Swap Dealers and Major Swap Participants

§ 23.200 Definitions.

For purposes of subpart F, the following terms shall be defined as provided.

(a) *Business trading unit* means any department, division, group, or personnel of a swap dealer or major swap participant or any of its affiliates, whether or not identified as such, that performs or is involved in any pricing, trading, sales, purchasing, marketing, advertising, solicitation, structuring, or brokerage activities on behalf of a registrant.

(b) *Clearing unit* means any department, division, group, or personnel of a registrant or any of its affiliates, whether or not identified as such, that performs any proprietary or customer clearing activities on behalf of a registrant.

(c) *Complaint* means any formal or informal complaint, grievance, criticism, or concern communicated to the swap dealer or major swap participant in any format relating to, arising from, or in connection with, any trading conduct or behavior or with the swap dealer or major swap participant's performance (or failure to perform) any of its regulatory obligations, and includes any and all observations, comments, remarks, interpretations, clarifications, notes, and examinations as to such conduct or behavior communicated or documented by the complainant, swap dealer, or major swap participant.

(d) *Counterparty* means any party to a derivative. When referring to a derivative between a swap dealer or major swap participant and any other person, "counterparty" means such other person.

(e) *Executed* means the completion of the execution process.

(f) *Execution* means, with respect to a swap, an agreement by the parties (whether orally, in writing,

[29] As discussed previously, the cost burdens associated with the reporting requirements contained in proposed regulation 23.204 and 23.205 are addressed in separately proposed rulemakings.

electronically, or otherwise) to the terms of a swap that legally binds the parties to such swap terms under applicable law.

(g) *Governing body* typically means, with respect to:

(1) A sole proprietorship, the proprietor;

(2) A corporation, its board of directors;

(3) A partnership, any general partner;

(4) A limited liability company or limited liability partnership, the manager, managing member or those members vested with management authority; and

(5) Any other person, the body or person with ultimate decision-making authority over the activities of such person.

(h) *Prudential regulator* has the meaning given to such term in section 1a(39) of the Commodity Exchange Act and includes the Board of Governors of the Federal Reserve System, the Office of the Comptroller of the Currency, the Federal Deposit Insurance Corporation, the Farm Credit Association, and the Federal Housing Finance Agency, as applicable to the swap dealer or major swap participant. The term also includes the Federal Deposit Insurance Corporation, with respect to any financial company as defined in section 201 of the Dodd-Frank Wall Street Reform and Consumer Protection Act or any insured depository institution under the Federal Deposit Insurance Act, and with respect to each affiliate of any such company or institution.

(i) *Registered entity* has the meaning given to such term in section 1a(40) of the Commodity Exchange Act, and includes boards of trade designated as contract markets, derivatives clearing organizations, swap execution facilities, and swap data repositories.

(j) *Related cash or forward transaction* means a purchase or sale for immediate or deferred physical shipment or delivery of an asset related to a swap where the swap and the related cash or forward transaction are used to hedge, mitigate the risk of, or offset one another.

(k) *Swap confirmation* means the consummation (electronically or otherwise) of legally binding documentation (electronic or otherwise) that memorializes the agreement of the parties to all the terms of the swap. A confirmation must be in writing (whether electronic or otherwise) and must legally supersede any previous agreement (electronically or otherwise).

§ 23.201 Required records.

(a) *Transaction and position records.* Each swap dealer and major swap participant shall keep full, complete, and systematic records, together with all pertinent data and memoranda, of all its swaps activities. Such records shall include:

(1) *Transaction records.* Records of each transaction, including all documents on which transaction information is originally recorded. Such records shall be kept in a form and manner identifiable and searchable by transaction and by counterparty, and shall include:

(i) All documents customarily generated in accordance with market practice that demonstrate the existence and nature of an order or transaction, including, but not limited to, records of all orders (filled, unfilled, or cancelled); correspondence; journals; memoranda; ledgers; confirmations; risk disclosure documents; statements of purchase and sale; contracts; invoices; warehouse receipts; documents of title; and

(ii) The daily trading records required to be kept in accordance with § 23.202.

(2) *Position records.* Records of each position held by each swap dealer and major swap participant, identified by product and counterparty, including records reflecting whether each position is "long" or "short" and whether the position is cleared. Position records shall be linked to transaction records in a manner that permits identification of the transactions that established the position.

(3) *Records of transactions executed on a swap execution facility or designated contract market or cleared by a derivatives clearing organization.* Records of each transaction executed on a swap execution facility or designated contract market or cleared by a derivatives clearing organization maintained in compliance with the Act and Commission regulations.

(b) *Business records.* Each swap dealer and major swap participant shall keep full, complete, and systematic records of all activities related to its business as a swap dealer or major swap participant, including but not limited to:

(1) *Governance.*

(i) Minutes of meetings of the governing body and relevant committee minutes, including handouts and presentation materials;

(ii) Organizational charts for its governing body and relevant committees, business trading unit, clearing unit, risk management unit, and all other relevant units or divisions;

(iii) Biographies or resumes of managers, senior supervisors, officers, and directors;

(iv) Job descriptions for manager, senior supervisor, officer, and director positions, including job responsibilities and scope of authority;

(v) Internal and external audit, risk management, compliance, and consultant reports (including management responses); and

(vi) Business and strategic plans for the business trading unit.

(2) *Financial records.*

(i) Records reflecting all assets and liabilities, income and expenses, and capital accounts as required by the Act and Commission regulations; and

(ii) All other financial records required to be kept under the Act and Commission regulations.

(3) *Complaints.*

(i) A record of each complaint received by the swap dealer or major swap participant concerning any partner, member, officer, employee, or agent. The record shall include the complainant's name, address, and account number; the date the complaint was received; the name of all persons identified in the complaint; a description of the nature of the complaint; the disposition of the complaint, and the date the complaint was resolved.

(ii) A record indicating that each counterparty of the swap dealer or major swap participant has been provided with a notice containing the physical address, email or other widely available electronic address, and telephone number of the department of the swap dealer or major swap participant to which any complaints may be directed.

(4) *Marketing and sales materials.* All marketing and sales presentations, advertisements, literature, and communications, and a record documenting that the swap dealer or major swap participant has complied with, or adopted policies and procedures reasonably designed to establish compliance with, all applicable federal requirements, Commission regulations, and the rules of any self-regulatory organization of which the swap dealer or major swap participant is a member.

(c) *Records of data reported to a swap data repository.* With respect to each swap, each swap dealer and major swap participant shall identify, retain, and produce for inspection all information and data required to be reported in accordance with part 45 of this chapter, along with a record of the date and time the swap dealer or major swap participant made the report.

(d) *Records of real-time reporting data.*

(1) Each swap dealer and major swap participant shall identify, retain, and produce for inspection all information and data required to be reported in

accordance with part 43 of this chapter, along with a record of the date and time the swap dealer or major swap participant made the report.

(2) When the swap dealer or major swap participant reports a less specific data field in accordance with part 43 of this chapter in order to protect the anonymity of the participants to such swap as permitted under part 43 of this chapter, the record shall contain the rationale for reporting a less specific data field.

(3) Each swap dealer and major swap participant shall identify and retain a record of any determination that any swap is a block trade or large notional swap, as defined in part 43 of this chapter. When the swap dealer or major swap participant enters into such a swap, the record shall contain the rationale for determining that the swap is a large notional swap, in accordance with part 43 of this chapter.

§ 23.202 Daily trading records.

(a) *Daily trading records for swaps.* Each swap dealer and major swap participant shall make and keep daily trading records of all swaps it executes, including all documents on which transaction information is originally recorded. Each swap dealer and major swap participant shall ensure that its records include all information necessary to conduct a comprehensive and accurate trade reconstruction for each swap. Each swap dealer and major swap participant shall maintain each transaction record as a separate electronic file identifiable and searchable by transaction and counterparty.

(1) *Pre-execution trade information.* Each swap dealer and major swap participant shall make and keep pre-execution trade information, including, at a minimum, records of all oral and written communications provided or received concerning quotes, solicitations, bids, offers, instructions, trading, and prices, that lead to the execution of a swap, whether communicated by telephone, voicemail, facsimile, instant messaging, chat rooms, electronic mail, mobile device or other digital or electronic media. Such records shall include, but are not limited to:

(i) Reliable timing data for the initiation of the trade that would permit complete and accurate trade reconstruction; and

(ii) A record of the date and time, to the nearest minute, using Coordinated Universal Time (UTC), by timestamp or other timing device, for each quotation provided to, or received from, the counterparty prior to execution.

(2) *Execution trade information.* Each swap dealer and major swap participant shall make and keep trade execution records, including:

(i) All terms of each swap, including all terms regarding payment or settlement instructions, initial and variation margin requirements, option premiums, payment dates, and any other cash flows;

(ii) The trade ticket for each swap (which, together with the time of execution of each swap, shall be immediately recorded electronically for further processing);

(iii) The unique swap identifier, as required by § 45.4(a) of this chapter, for each swap;

(iv) A record of the date and time of execution of each swap, to the nearest minute, using Coordinated Universal Time (UTC), by timestamp or other timing device;

(v) The name of the counterparty with which each such swap was executed, including its unique counterparty identifier, as required by § 45.4(b) of this chapter;

(vi) The date and title of the agreement to which each swap is subject, including but not limited to, any master swap netting agreement or swap credit support agreement;

(vii) The product name of each swap, including its unique product identifier, as required by § 45.4(c) of this chapter;

(viii) The price at which the swap was executed;

(ix) Fees or commissions and other expenses, identified by transaction; and

(x) Any other information relevant to the swap.

(3) *Post-execution trade information.* Each swap dealer and major swap participant shall make and keep records of post-execution trade information containing an itemized record of all relevant post-trade processing and events.

(i) Records of post-trade processing and events shall include all of the following, as applicable:

(A) Confirmation;
(B) Termination;
(C) Novation;
(D) Amendment;
(E) Assignment;
(F) Netting;
(G) Compression;
(H) Reconciliation;
(I) Valuation;
(J) Margining;
(K) Collateralization; and
(L) Central clearing.

(ii) Each swap dealer and major swap participant shall make and keep a record of all swap confirmations, along with the date and time, to the nearest minute, using Coordinated Universal Time (UTC), by timestamp or other timing device; and

(iii) Each swap dealer and major swap participant shall make and keep a record of each swap portfolio reconciliation, including the number of portfolio reconciliation discrepancies and the number of swap valuation disputes (including the time-to-resolution of each valuation dispute and the age of outstanding valuation disputes, categorized by transaction and counterparty);

(iv) Each swap dealer and major swap participant shall make and keep a record of each swap portfolio compression exercise in which it participates, including the dates of the compression, the swaps included in the compression, the identity of the counterparties participating in the exercise, the results of the compression, and the name of the third-party entity performing the compression, if any; and

(v) Each swap dealer and major swap participant shall make and keep a record of each swap that it centrally clears, categorized by transaction and counterparty.

(4) *Ledgers.* Each swap dealer and major swap participant shall make and keep ledgers (or other records) reflecting the following:

(i) Payments and interest received;

(ii) Moneys borrowed and moneys loaned;

(iii) The daily calculation of the value of each outstanding swap;

(iv) The daily calculation of current and potential future exposure for each counterparty;

(v) The daily calculation of initial margin to be posted by the swap dealer or major swap participant for each counterparty and the daily calculation of initial margin to be posted by each counterparty;

(vi) The daily calculation of variation margin payable to or receivable from each counterparty;

(vii) The daily calculation of the value of all collateral, before and after haircuts, held by or posted by the swap dealer or major swap participant;

(viii) All transfers of collateral, including any substitutions of collateral, identifying in sufficient detail the amounts and types of collateral transferred; and

(ix) All charges against and credits to each counterparty's account, including funds deposited, withdrawn, or transferred, and charges or credits resulting from losses or gains on transactions.

(b) *Daily trading records for related cash and forward transactions.* Each swap dealer and major swap participant shall make and keep daily trading

records of all related cash or forward transactions it executes, including all documents on which the related cash or forward transaction information is originally recorded. Each swap dealer and major swap participant shall ensure that its records include all information necessary to conduct a comprehensive and accurate trade reconstruction for each related cash or forward transaction. Each swap dealer and major swap participant shall maintain each transaction record as a separate electronic file identifiable and searchable by transaction and by counterparty. Such records shall include, but are not limited to:

(1) A record of all oral and written communications provided or received concerning quotes, solicitations, bids, offers, instructions, trading, and prices, that lead to the conclusion of a related cash or forward transaction, whether communicated by telephone, voicemail, facsimile, instant messaging, chat rooms, electronic mail, mobile device or other digital or electronic media;

(2) Reliable timing data for the initiation of the transaction that would permit complete and accurate trade reconstruction;

(3) A record of the date and time, to the nearest minute, using Coordinated Universal Time (UTC), by timestamp or other timing device, for each quotation provided to, or received from, the counterparty prior to execution;

(4) A record of the date and time of execution of each related cash or forward transaction, to the nearest minute, using Coordinated Universal Time (UTC), by timestamp or other timing device;

(5) All terms of each related cash or forward transaction;

(6) The price at which the related cash or forward transaction was executed; and

(7) A record of the daily calculation of the value of the related cash or forward transaction and any other relevant financial information.

§ 23.203 Records; retention and inspection.

(a) *Location of records.* (1) All records required to be kept by a swap dealer or major swap participant by the Act and by Commission regulations shall be kept at the principal place of business of the swap dealer or major swap participant or such other principal office as shall be designated by the swap dealer or major swap participant. If the principal place of business is outside of the United States, its territories or possessions, then upon the request of a Commission representative, the swap dealer or major swap participant must provide such records as requested at the place in the United States, its territories, or possessions designated by the representative within 72 hours after receiving the request.

(2) *Contact information.* Each swap dealer and major swap participant shall maintain for each of its offices a listing, by name or title, of each person at that office who, without delay, can explain the types of records the swap dealer or major swap participant maintains at that office and the information contained in those records.

(b) *Record retention.* (1) The records required to be maintained by this chapter shall be maintained in accordance with the provisions of § 1.31, except as provided in paragraphs (b)(2) and (3) of this section. All records required to be kept by the Act and by Commission regulations shall be kept for a period of five years from the date the record was made and shall be readily accessible during the first two (2) years of the five-year period. All such records shall be open to inspection by any representative of the Commission, the United States Department of Justice, or any applicable prudential regulator. Records relating to swaps defined in section 1a(47)(A)(v) shall be open to inspection by any representative of the Commission, the United States Department of Justice, the Securities and Exchange Commission, or any applicable prudential regulator.

(2) Records of any swap or related cash or forward transaction shall be kept until the termination, maturity, expiration, transfer, assignment, or novation date of the transaction, and for a period of five years after such date. Such records shall be readily accessible until the termination, maturity, expiration, transfer, assignment, or novation date of the transaction and during the first two years of the 5-year period following such date. All such records shall be open to inspection by any representative of the Commission, the United States Department of Justice, or any applicable prudential regulator. Records relating to swaps defined in section 1a(47)(A)(v) shall be open to inspection by any representative of the Commission, the United States Department of Justice, the Securities and Exchange Commission, or any applicable prudential regulator.

(3) Records of any swap data reported in accordance with part 45 of this chapter shall be maintained in accordance with the requirements of § 45.2 of this chapter.

§ 23.204 Reports to swap data repositories.

(a) *Reporting of swap transaction data to swap data repositories.* Each swap dealer and major swap participant shall report all information and data in accordance with part 45 of this chapter.

(b) *Electronic reporting of swap transaction data.* Each swap dealer and major swap participant shall have the electronic systems and procedures necessary to transmit electronically all information and data required to be reported in accordance with part 45 of this chapter.

§ 23.205 Real-time public reporting.

(a) *Real-time public reporting of swap transaction and pricing data.* Each swap dealer and major swap participant shall report all information and swap transaction and pricing data required to be reported in accordance with the real-time public recording requirements in part 43 of this chapter.

(b) *Electronic reporting of swap transaction data.* Each swap dealer and major swap participant shall have the electronic systems and procedures necessary to transmit electronically all information and data required to be reported in accordance with part 43 of this chapter.

Issued in Washington, DC, on December 1, 2010, by the Commission.

David A. Stawick,

Secretary of the Commission.

Appendices to Reporting, Recordkeeping, and Daily Trading Records Requirements for Swap Dealers and Major Swap Participants—Commission Voting Summary and Statements of Commissioners

Note: The following appendices will not appear in the Code of Federal Regulations.

Appendix 1—Commission Voting Summary

On this matter, Chairman Gensler and Commissioners Dunn, Sommers, Chilton and O'Malia voted in the affirmative.

Appendix 2—Statement of Chairman Gary Gensler

I support the proposed rule regarding reporting, recordkeeping and daily trading records for swap dealers and major swap participants. The rule establishes the records to be maintained by swap dealers and major swap participants and the required reporting by such entities. This proposal will help increase transparency and promote market integrity. The proposed rules are consistent with the Congressional requirement that swap dealers and major swap participants

comply with rigorous recordkeeping and real-time reporting regimes.

[FR Doc. 2010–30884 Filed 12–8–10; 8:45 am]

BILLING CODE 6351–01–P

DEPARTMENT OF THE TREASURY

31 CFR Part 103

RIN 1506–AB02

Financial Crimes Enforcement Network: Anti-Money Laundering Program and Suspicious Activity Report Filing Requirements for Residential Mortgage Lenders and Originators

AGENCY: Financial Crimes Enforcement Network ("FinCEN"), Treasury.

ACTION: Notice of proposed rulemaking.

SUMMARY: FinCEN, a bureau of the Department of the Treasury ("Treasury"), is issuing proposed rules defining non-bank residential mortgage lenders and originators as loan or finance companies for the purpose of requiring them to establish anti-money laundering programs and report suspicious activities under the Bank Secrecy Act.

DATES: Written comments on this notice of proposed rulemaking ("NPRM") must be submitted on or before February 7, 2011.

ADDRESSES:

FinCEN: You may submit comments, identified by Regulatory Identification Number (RIN) 1506–AB02, by any of the following methods:

- *Federal E-rulemaking Portal: http://www.regulations.gov.* Follow the instructions for submitting comments. Include 1506–AB02 in the submission. Refer to Docket Number FINCEN–2010–0001.
- *Mail:* FinCEN, P.O. Box 39, Vienna, VA 22183. Include 1506–AB02 in the body of the text. Please submit comments by one method only. Comments submitted in response to this NPRM will become a matter of public record. Therefore, you should submit only information that you wish to make publicly available.

Inspection of comments: Public comments received electronically or through the U.S. Postal Service sent in response to a notice and request for comment will be made available for public review as soon as possible on *http://www.regulations.gov.* Comments received may be physically inspected in the FinCEN reading room located in Vienna, Virginia. Reading room appointments are available weekdays (excluding holidays) between 10 a.m. and 3 p.m., by calling the Disclosure Officer at (703) 905–5034 (not a toll-free call).

FOR FURTHER INFORMATION CONTACT: The FinCEN regulatory helpline at (800) 949–2732 and select Option 6.

SUPPLEMENTARY INFORMATION:

I. Background

The Bank Secrecy Act ("BSA") [1] authorizes the Secretary of the Treasury (the "Secretary") to issue regulations requiring financial institutions to keep records and file reports that the Secretary determines "have a high degree of usefulness in criminal, tax, or regulatory investigations or proceedings, or in the conduct of intelligence or counterintelligence activities, including analysis, to protect against international terrorism." [2] In addition, the Secretary is authorized to impose anti-money laundering program requirements on financial institutions.[3] The authority of the Secretary to administer the BSA has been delegated to the Director of FinCEN.[4]

A. Anti-Money Laundering Programs

Financial institutions are required to establish anti-money laundering ("AML") programs that include, at a minimum: (1) The development of internal policies, procedures, and controls; (2) the designation of a compliance officer; (3) an ongoing employee training program; and (4) an independent audit function to test programs.[5] When prescribing minimum standards for AML programs, FinCEN must "consider the extent to which the requirements imposed under [the AML program requirement] are commensurate with the size, location, and activities of the financial institutions to which such regulations apply." [6]

The BSA defines the term "financial institution" to include, in part, "a loan or finance company." [7] On April 29, 2002, and again on November 6, 2002, FinCEN temporarily exempted this category of financial institution, among others, from the requirement to establish an AML program.[8] The purpose of the temporary exemption was to enable Treasury and FinCEN to study the exempted categories of institutions and to consider the extent to which AML requirements should be applied to them, taking into account their specific characteristics and money laundering vulnerabilities.

The statutory mandate that all financial institutions establish an anti-money laundering program is a key element in the national effort to prevent and detect money laundering and the financing of terrorism. This NPRM proposes to apply the AML program requirement to companies performing specified services in connection with residential mortgages. This would put these institutions on par with depository institutions performing such services in this respect.[9]

B. Suspicious Activity Reporting Programs

With the enactment of 31 U.S.C. 5318(g) in 1992,[10] Congress authorized the Secretary to require financial institutions to report suspicious transactions. As amended by the USA PATRIOT Act, subsection (g)(1) states:

> The Secretary may require any financial institution, and any director, officer, employee, or agent of any financial institution, to report any suspicious transaction relevant to a possible violation of law or regulation.

There has been a regulatory gap between the BSA's coverage of depository institutions and residential mortgage lenders and originators in that the latter are currently not subject to BSA requirements, the Suspicious Activity Report ("SAR") foremost among them. Imposing a SAR requirement would address this regulatory gap. Moreover, a SAR requirement would potentially expand the kinds of activities being reported to FinCEN's BSA database, thereby giving our regulatory and law enforcement partners a more complete picture, both on a systemic and case-specific level, of

[1] "Bank Secrecy Act" is the name that has come to be applied to the Currency and Foreign Transactions Reporting Act (Titles I and II of Pub. L. 91–508), its amendments, and the other statutes referring to the subject matter of that Act. These statutes are codified at 12 U.S.C. 1829b, 12 U.S.C. 1951–1959, and 31 U.S.C. 5311–5314 and 5316–5332, and notes thereto.

[2] 31 U.S.C. 5311.

[3] 31 U.S.C. 5318(h).

[4] *See* Treasury Order 180–01 (Sept. 26, 2002).

[5] 31 U.S.C. 5318(h).

[6] Public Law 107–56 § 352(c), 115 Stat. § 322, *codified at* 31 U.S.C. 5318 note. Public Law 107–56 is the Uniting and Strengthening America by Providing Appropriate Tools Required to Intercept and Obstruct Terrorism Act of 2001 ("USA PATRIOT Act").

[7] 31 U.S.C. 5312(a)(2)(P).

[8] *See* 31 CFR 103.170; 67 FR 21113 (Apr. 29, 2002), *as amended at* 67 FR 67549 (Nov. 6, 2002) and *corrected at* 67 FR 68935 (Nov. 14, 2002).

[9] *See* 31 CFR 103.120.

[10] 31 U.S.C. 5318(g) was added to the BSA by section 1517 of the Annunzio-Wylie Anti-Money Laundering Act, Title XV of the Housing and Community Development Act of 1992, Public Law 102–550; it was expanded by section 403 of the Money Laundering Suppression Act of 1994 (the Money Laundering Suppression Act), Title IV of the Riegle Community Development and Regulatory Improvement Act of 1994, Public Law 103–325, to require designation of a single government recipient for reports of suspicious transactions.

mortgage-related financial crimes. In these and other respects, residential mortgage lenders and originators may assume an increasingly crucial role in government and industry efforts to protect consumers, mortgage finance businesses, and the U.S. financial system from money laundering and other financial crimes.

C. Regulatory Background

On April 10, 2003, FinCEN issued an advance notice of proposed rulemaking ("ANPRM") regarding AML requirements for "persons involved in real estate closings and settlements" ("2003 ANPRM").[11] The 2003 ANPRM noted that the BSA had no definition of the term "persons involved in real estate closings and settlements;" that FinCEN had not had occasion to define the term in a regulation; and that the legislative history of the term provided no insight into how Congress intended the term to be defined.

The 2003 ANPRM noted that real estate transactions could involve multiple "persons" (*i.e.,* individuals and business entities), including: real estate agents, banks, mortgage banks, mortgage brokers, title insurance companies, appraisers, escrow agents, settlement attorneys or agents, property inspectors, and other persons directly and tangentially involved in property financing, acquisition, settlement, and occupation. The 2003 ANPRM further noted that persons involved in real estate transactions, and the nature of their involvement, could vary with the contemplated use of the real estate, the nature of the rights to be acquired, or how these rights were to be held, *e.g.,* for residential, commercial, portfolio investment, or development purposes.

The 2003 ANPRM also expressed FinCEN's views as to guiding principles that should be considered in defining persons involved in real estate closings and settlements. Any definitions or terms that define the scope of the rule should consider: (1) Those persons whose services rendered or products offered in connection with a real estate closing or settlement can be abused by money launderers; (2) those persons who are positioned to identify the purpose and nature of the transaction; (3) the importance of various participants to successful completion of the transaction, which may suggest that they are well positioned to identify suspicious conduct; (4) the degree to which professionals may have very different roles, in different transactions, which may result in greater exposure to money laundering; and (5) involvement with the actual flow of funds used in the transaction.[12] FinCEN has not issued any additional notices regarding persons involved in real estate closings and settlements since the 2003 ANPRM. FinCEN has, in the interim, continued its research and analysis related to the various categories of financial institutions exempted in 2002.

In view of increasing concern among regulators, law enforcement, and Congress over abusive and fraudulent sales and financing practices in residential mortgage markets, FinCEN has undertaken a number of strategic, outreach, and law enforcement support initiatives and analytical reports related to mortgage fraud.[13]

On July 21, 2009, FinCEN issued an ANPRM entitled "Anti-Money Laundering Program and Suspicious Activity Report Requirements for Non-Bank Residential Mortgage Lenders and Originators."[14] The 2009 ANPRM expressed FinCEN's inclination to develop AML and SAR program regulations for a specific subset of loan and finance companies: non-bank residential mortgage lenders and originators.[15] The 2009 ANPRM suggested that any new rules likely would contain standards and requirements analogous to those currently applicable to federally regulated depository institutions.[16]

D. Key Issues Related to Proposed AML and SAR Regulations for Residential Mortgage Lenders and Originators

With this NPRM, FinCEN is proposing an incremental approach to implementation of AML and SAR regulations for loan and finance companies that would focus first on those business entities that are engaged in residential mortgage lending or origination and are not currently subject to any AML or SAR program requirement under the BSA. Residential mortgage lenders and originators (*e.g.,* independent mortgage loan companies and mortgage brokers) are primary providers of mortgage finance—in most cases dealing directly with the consumer—and are in a unique position to assess and identify money laundering risks and fraud while directly assisting consumers with their financial needs and protecting them from the abuses of financial crime. FinCEN believes that new regulations requiring residential mortgage lenders and originators to adopt AML programs and report suspicious transactions would augment FinCEN's initiatives in this area. Among other benefits, such regulations would complement efforts underway by these companies to comply with the nationwide licensing system and registry under development since the passage of the Secure and Fair Enforcement for Mortgage Licensing Act of 2008 ("SAFE Act").[17] As mortgage companies and brokers implement systems and procedures to comply with the SAFE Act, there will be opportunities for them to review and enhance their educational and training programs to ensure that employees are able to identify and deal with fraud, money laundering, and other financial crimes appropriately.

In the 2009 ANPRM, FinCEN sought public comment on a wide range of issues, including: (1) The incremental approach to the issuance of regulations for loan and finance companies that would initially affect only those businesses engaged in residential mortgage lending or origination; (2) how any such regulations should define businesses engaged in residential mortgage lending or origination; (3) the financial crime and money laundering risks posed by such businesses; (4) how AML programs for such businesses should be structured; (5) whether such businesses should be covered by BSA requirements other than the AML program requirement and the SAR reporting requirement; and (6) whether certain businesses or transactions should be exempted from AML program or SAR reporting requirements. By issuing this NPRM, FinCEN again requests comments on these issues, this time in the context of a specific proposed regulation, as well as on the matters addressed below.

FinCEN received twelve comments on the 2009 ANPRM: one from the U.S. Department of Justice; five from trade associations; one from a Federal credit

[11] *See* 68 FR 17569 (Apr. 10, 2003). This category of financial institution is listed at 31 U.S.C. 5312(a)(2)(U).

[12] *See* 68 FR 17569, 17570 (Apr. 10, 2003).

[13] *See Mortgage Fraud* (a listing of FinCEN's mortgage fraud related initiatives) *http://www.fincen.gov/mortgagefraud. See also,* remarks of James H. Freis, Jr., Director, FinCEN, delivered at the ABA/ABA Money Laundering Enforcement Conference, Oct. 13, 2009 (the "Initiatives Speech"), *http://www.fincen.gov/news_room/speech/html/20071022. See also,* remarks of Timothy Geithner, Secretary, U.S. Department of the Treasury, on "The Financial Fraud Enforcement Task Force", Nov. 17, 2009, *http://www.fincen.gov/whatsnew/html/20091117.*

[14] 74 FR 35830 (July 21, 2009) ("2009 ANPRM").

[15] *Id. See also* note 7, *supra.* In this case, and throughout this NPRM, the term "residential mortgage originator" is defined to include, among other persons, entities commonly referred to as brokers in the residential mortgage sector.

[16] *See* 74 FR at 35831.

[17] *See* Title V of Division A of the Housing and Economic Recovery Act of 2008, Public Law 110–289, 122 Stat. 2810 (2008), *codified at* 12 U.S.C. 5101, *et seq.*

union; one from a mortgage company; one from a U.S. Senator; and three from individuals writing on their own behalf.[18] The 2009 ANPRM sought information on a number of key issues related to the possible implementation of AML and SAR program regulations for the sector.

1. Risks of Mortgage Fraud and Money Laundering

As noted in the 2009 ANPRM and the 2003 ANPRM, the residential real estate sector may be vulnerable at all stages of the money laundering process. Money laundering is a process by which the illicit origin of funds is obscured, and a plausible legitimate origin often substituted.[19] The crime of money laundering is defined, in part, with respect to the proceeds of specific unlawful "predicate" activities. Both mortgage fraud and the act of laundering mortgage fraud proceeds are crimes, and both are destructive to consumers, individual businesses and the financial system as a whole. Despite the relative illiquidity of most real estate assets, money launderers have used residential mortgage transactions—fraudulently and legitimately structured—to disguise the proceeds of crime.

In recent years, a significant percentage of SARs filed with FinCEN have reported suspected fraud schemes involving real estate lenders, brokers, agents, appraisers, and other businesses associated with real estate finance and settlements.[20] FinCEN studies also have shown the connection between businesses involved in mortgage fraud and other suspected financial crimes.[21]

There was broad agreement among the comments submitted on the 2009 ANPRM that the risks of fraud and other financial crimes, including money laundering, are substantial in the non-bank mortgage finance sector and growing. Some comments stated that the financial crime risks in the sector are "no less significant" than those faced by banks providing mortgage loan services. A few comments stated that the primary risk in the sector is mortgage fraud, and that the risk of money laundering, specifically, is lower than for fraud. Such comments notwithstanding, the proceeds of any mortgage fraud have a high likelihood of being laundered through other financial institutions subject to the BSA, either directly in conjunction with the granting of the mortgage loan and related settlement transactions or at a later stage in conjunction with the placement, layering or integration of proceeds connected with the mortgage fraud.[22] FinCEN requests comments that address the experience of the residential mortgage lending sector with money laundering and fraud schemes generally. FinCEN specifically requests information regarding the existence of any safeguards in the sector to guard against fraud, money laundering, and other financial crime, and the applicability of such safeguards to the development of AML and SAR reporting programs.

2. An Incremental Approach to the Sector: Starting With Residential Mortgage Lenders and Originators

As is the case with the term "persons involved in real estate closings and settlements," the term "loan or finance company" is not defined or discussed in any FinCEN regulation, and there is no legislative history on the term. The term, however, could conceivably extend to any business entity that makes loans to or finances purchases on behalf of consumers and businesses. Loan and finance companies originate loans and leases to finance the purchase of consumer goods such as automobiles, furniture, and household appliances. They also extend personal loans and loans secured by real estate mortgages and deeds of trust, including home equity loans. They supply short- and intermediate-term credit for such purposes as the purchase of equipment and motor vehicles and the financing of inventories. In addition, specialized wholesale loan and finance companies provide liquidity that allows retail loan and finance companies, as well as banks and others, to service end users.[23]

Comments submitted on the 2009 ANPRM expressed general support for an incremental approach. One commenter emphasized that the sector has been the primary focus of recent government-wide law enforcement anti-fraud programs. Another commenter expressed the view that most if not all state regulators of mortgage companies likely would support FinCEN's proposal. While the comments expressed general support for an incremental approach, there also was some concern voiced about limiting the scope of the rules to residential mortgage lenders and originators at this time. A few commenters cautioned that FinCEN should not delay implementation of rules for other consumer and commercial finance companies and one commenter urged FinCEN to implement such requirements for persons involved in real estate closings and settlements.

Arguably, the absence of rules for these other types of loan or finance companies might be exploited by criminals insofar as they may shift the focus of their criminal enterprises from residential to other consumer and commercial finance businesses. As noted in the 2009 ANPRM, FinCEN is inclined to defer regulations for commercial real estate finance businesses and other types of consumer and commercial finance businesses until further research and analysis can be conducted to enhance our understanding of the number and kinds of businesses in their sector, their business operations and money laundering vulnerabilities. For the same

[18] Comments to the 2009 ANPRM are available for public viewing at *http://www.regulations.gov.*

[19] There are three general stages of money laundering: placement, layering, and integration. The "placement" stage is the stage at which funds from illegal activity or funds intended to support illegal activity are first introduced into the financial system. Money laundering "layering" involves the distancing of illegal funds from their criminal source through the creation of complex layers of financial transactions. "Integration" occurs when illegal funds are made to appear to have been derived from a legitimate source.

[20] *See* Advisory to Financial Institutions on Filing Suspicious Activity Reports Regarding Home Equity Conversion Mortgage Fraud Schemes, Apr. 2010, *http://www.fincen.gov/statutes_regs/guidance/htm/fin-2010-a005.html* ; Mortgage Loan Fraud Update, Feb. 2010, *http://www.fincen.gov/news_room/nr/pdf/20100218.pdf;* Filing Trends in Mortgage Loan Fraud, Feb. 2009, *http://www.fincen.gov/news_room/nr/pdf/20090225a.pdf;* Mortgage Loan Fraud: an Update of Trends Based upon Analysis of Suspicious Activity Reports, Apr. 2008, *http://www.fincen.gov/news_room/rp/files/MortgageLoanFraudSARAssessment.pdf;* Suspected Money Laundering in the Residential Real Estate Industry, Apr. 2008, *http://www.fincen.gov/news_room/rp/files/MLR_Real_Estate_Industry_SAR_web.pdf;* Money Laundering in the Commercial Real Estate Industry; Dec. 2006, *http://www.fincen.gov/news_room/rp/reports/pdf/CREassessment.pdf;* Mortgage Loan Fraud: An Industry Assessment Based Upon Suspicious Activity Report Analysis, Nov. 2006, *http://www.fincen.gov/news_room/rp/reports/pdf/mortgage_fraud112006.pdf.*

[21] *See* Mortgage Loan Fraud Connections with Other Financial Crime: An Evaluation of Suspicious Activity Reports Filed by Money Services Businesses, Securities and Futures Firms, Insurance Companies and Casinos, Mar. 2009, *http://www.fincen.gov/news_room/rp/files/mortgage_fraud.pdf.*

[22] *Id.*

[23] The North American Industry Classification System ("NAICS") classifies approximately 10 types of mortgage finance related businesses and professions and over 60 other businesses, professions and institutions (*e.g.,* consumer and commercial finance companies, pawnshops, auto finance, equipment leasing, personal credit companies, industrial loan companies and government sponsored enterprises) as primarily engaged in consumer and commercial lending and finance. NAICS was developed as the standard for use by Federal statistical agencies in classifying business establishments for the collection, analysis, and publication of statistical data related to the business economy of the U.S. NAICS was developed under the auspices of the Office of Management and Budget ("OMB"), and adopted in 1997.

reasons, FinCEN is not inclined at this time to propose rules for real estate agents and other persons involved in real estate closings and settlements.

FinCEN will continue to study a range of consumer and commercial finance companies with a view toward determining the extent to which it is appropriate to expand the scope of the definition of loan or finance company proposed in this NPRM in a future rulemaking. FinCEN seeks general comment on the application of AML program and SAR regulations to other loan and finance companies. FinCEN requests comment on how new AML and SAR program requirements could be integrated into existing compliance and anti-fraud programs of such companies.

3. Scope of the Rules; Loan or Finance Company

As noted above, "Loan or Finance Company" is a term that could encompass many categories of entities. At this time, FinCEN is only addressing residential mortgage lenders and originators, but future rulemakings may include other types of loan or finance companies. A loan or finance company does not include banks or persons registered with and functionally regulated or examined by the Securities and Exchange Commission or the Commodity Futures Trading Commission, all of which are already subject to AML program and SAR reporting requirements. Additionally, a loan or finance company does not include an individual employed by a loan or finance company or other financial institution. FinCEN does not seek to obligate individuals, but rather businesses, including sole proprietorships, because enterprise wide anti-money laundering programs are more effective and reduce duplicative efforts.

4. Scope of the Rules; Residential Mortgage Lender or Originator

The challenge for FinCEN in drafting rules is that most real estate finance—both residential and commercial—involves complex transactions and multiple parties whose roles are not always readily discernable by the titles and terms used to describe them in generally accepted business practices or under applicable licensing and registration regimes. The primary mortgage market in the United States is fragmented, and even simple real estate finance transactions may involve one or more parties that may originate, fund, broker, purchase, transfer, service, securitize, or insure the mortgage loan. Additionally, the market is fragmented between different types of entities, some of which are already regulated financial institutions, such as banks, and some of which are small independent entities, such as many mortgage brokers.

FinCEN believes that the views, assumptions and guiding principles noted in the 2003 ANPRM are equally relevant to the development of AML program and SAR reporting regulations for residential mortgage lenders and originators. In the 2009 ANPRM and the 2003 ANPRM, FinCEN stated that AML obligations should be applicable to those persons that "conduct the activities that place them in the best position to identify the nature of the transaction, recognize suspicious activity, and prevent misuse of their services for money laundering and other financial crimes."[24] This activity-based approach focuses on the nature of the activity conducted and its primary function in a particular residential mortgage transaction, rather than on the name or title ascribed to the person facilitating the transaction.

Comments on the 2009 ANPRM reflected broad agreement that the definitions should be crafted so that the rules encompass an appropriate range of key non-bank residential mortgage lenders and originators. FinCEN seeks comment on which participants involved in non-bank residential mortgage finance are in a position where they can effectively identify and guard against fraud, money laundering, and other financial crimes. Commenters may, among other things, address both the extent to which various participants have access to information regarding the nature and purpose of the transactions at issue and the importance of the participants' involvement to successful completion of the transactions. Comments are welcome from those involved centrally in the residential mortgage finance process (*i.e.,* those who may act as an agent for some or all of the parties and are responsible for reviewing the form and type of payment, as well as being aware of the parties to the mortgage transaction), and those who view their involvement as more peripheral. FinCEN seeks comment specifically on whether FinCEN should adopt the definitions of "residential mortgage lender," "residential mortgage originator," and "residential mortgage loan" set forth in the proposed regulation at 103.11(ddd).[25]

5. Scope of the Rules; Entities Not Covered by the Definitions

The proposed definitions do not include natural persons and certain businesses and transactions, described below.[26] FinCEN therefore requests comment on whether the definitions used should be wider or narrower in scope to include or exclude any specific types of residential mortgage lenders or originators or any specific category of mortgage finance customer or transaction. Two commenters on the 2009 ANPRM expressed the view that any new rules should not recognize or permit any exemptions or exceptions. Consistent with FinCEN's perspective on the issue, several comments submitted on the 2009 ANPRM suggested that any exemptions FinCEN considers should take into account and balance the risks of money laundering against the implementation and compliance costs and obligations likely to be borne by this sector. FinCEN endeavors to balance and take into account the benefits of the regulations (including the prevention and detection of money laundering and other financial crimes, as well as the value to law enforcement and regulatory agencies of additional data on suspected financial crimes) against the implementation and compliance costs and obligations likely to be borne by the industry.

One comment submitted on the 2009 ANPRM stated that individuals in seller-financed transactions should be excluded from the scope definitions, or exempt from the rules. FinCEN agrees, and this NPRM proposes exemptions for individuals financing the sale of their own real estate. Two comments on the 2009 ANPRM suggested that persons conducting a *de minimis* number of transactions—as few as one and as many as five were suggested—should be carved out of the scope definitions or exempt. At this time, FinCEN does not intend to propose an exemption for a person that conducts or facilitates a relatively low volume of mortgage finance transactions if the person nonetheless falls within the definition of residential mortgage lender or originator. FinCEN intends the proposed regulations to reflect the distinction between a seller-financed transaction (which typically involves family members or friends in a one-time transaction) and a person that is

[24] 2009 ANPRM, 74 FR at 35833.

[25] As noted in the 2009 ANPRM, several definitions in current federal law (*e.g.,* definitions of "mortgage lending business" and "loan originator") may be useful references for comments on the scope of the proposed regulations. *See* 74 FR at 35833.

[26] The proposed regulations apply to businesses, including sole proprietorships, not individuals. Thus, for example, individuals covered by the SAFE Act definition of "loan originator," 12 U.S.C. 5102(3)(A)(ii), would not be covered by the proposed regulations.

primarily engaged in the mortgage finance business but for business reasons or changes in markets, competition or other factors, conducts relatively few transactions within a given period.

The proposed definitions also do not include those persons that are solely responsible for administrative functions that support or facilitate residential mortgage finance transactions. FinCEN requests comment on whether it is necessary for FinCEN to provide a specific exemption for persons performing administrative support functions. Such an exemption would be consistent with the SAFE Act, which recognizes an administrative support exemption or carve-out from the definition of "loan originator."[27] FinCEN seeks comment on whether other specific businesses or transactions should be excluded from the definition of loan or finance company.

Comments regarding the scope of the definitions should be designed to enable FinCEN to evaluate the risks of money laundering, the potential value to law enforcement, and other relevant factors. FinCEN also seeks suggestions on how FinCEN may craft clearly delineated categories of included and excluded businesses or transactions.

6. Structure and Elements of AML and SAR Regulations

The 2009 ANPRM stated FinCEN's inclination to propose AML and SAR rules that have similar reporting standards, thresholds, and procedures to those set forth in AML and SAR regulations for other industries. The proposed AML and SAR rules contain essentially the same standards and requirements as the existing BSA rules for other financial institutions.

FinCEN has promulgated SAR reporting regulations for a number of financial institutions that have AML program requirements, including: mutual funds, insurance companies, futures commission merchants and introducing brokers in commodities, banks, brokers or dealers in securities, money services businesses, and casinos.[28]

In applying the AML program requirements to residential mortgage lenders and originators, FinCEN must consider the extent to which the standards for AML programs are commensurate with the size, location, and activities of such persons.[29] FinCEN recognizes that while large businesses are engaged in mortgage finance, businesses in this industry may also include smaller companies or sole proprietors. FinCEN thus seeks comment on any particular concerns smaller businesses may have regarding the implementation of AML and SAR reporting programs.

FinCEN believes that AML programs will complement the anti-fraud and general compliance programs that residential mortgage lenders and originators have established to comply with the SAFE Act and other Federal and State laws and protect their own business operations. Many residential mortgage lenders and originators may be able to integrate risk-based AML reporting programs into existing enterprise-wide, anti-fraud, and compliance programs in a complementary manner that utilizes efficiencies and commonalities and enhances the effectiveness of a business's compliance measures. As noted, these businesses also may have procedures in place to prevent fraud, which they may be able to integrate into their AML programs.[30] FinCEN seeks comment on how the programs and practices that residential mortgage lenders and originators have in place to prevent mortgage fraud and other illegal activities may be applicable to the development of AML and SAR programs.

Accordingly, in this NPRM, FinCEN proposes AML and SAR regulations applicable to residential mortgage lenders and originators that contain similar reporting standards, thresholds, and procedures to those set forth in AML and SAR regulations for other industries. As FinCEN has emphasized in its recent reports on mortgage loan fraud trends, SARs provide a valuable tool for regulatory and law enforcement agencies seeking to isolate specific instances of potential criminal activity for further investigation, and to identify emerging money laundering and terrorism financing trends.[31] The due diligence necessary for financial institutions to detect and report known or suspected suspicious activity greatly reduces vulnerability to the abuses of money laundering and terrorist financing.

In response to the 2009 ANPRM, one law enforcement agency stated that the absence of SAR data from the sector has impeded law enforcement analysis of mortgage fraud and related crimes. Several comments agreed that SARs provide important, timely information to help investigate and prosecute financial crimes and that mortgage lenders should be required to file SARs. Three major trade associations stated that mortgage lenders and originators are in a unique position to identify and report mortgage-related money laundering and fraud.

Several commenters urged FinCEN to propose only AML and SAR program requirements for the sector at this time. Because FinCEN believes an incremental approach is appropriate, FinCEN defers proposing additional BSA regulations for the sector at this time, including Currency Transaction Report (CTR) requirements. Entities subject to this regulation would still have to file Form 8300 for transactions involving the receipt of more than $10,000 in currency. However, FinCEN may determine, after further research, that additional BSA regulations may be appropriate for this sector. FinCEN seeks comment on whether it should consider other BSA regulations in addition to AML program and SAR requirements.

FinCEN seeks general comment regarding the impact of the proposed new rules, specifically: (1) The impact of AML or SAR regulations on business operations, profitability, growth and practices; (2) the impact of AML or SAR regulations or other BSA regulations on consumers seeking to obtain residential mortgages; (3) the effectiveness of examining for and enforcing compliance with any such regulatory requirements; and (4) the advisability of establishing some minimum transaction threshold value or annual volume threshold below which some or all regulatory requirements would not apply. We also solicit comment on the value to law enforcement and regulatory agencies of the proposed regulations. Comments on all aspects of the NPRM are welcome, and we encourage all interested parties to provide their views.

7. Consideration of Examination Authority

Generally, the Internal Revenue Service has been delegated the authority to examine for BSA compliance purposes those regulated entities without a Federal functional regulator with broad supervisory authority.[32] FinCEN seeks comment on any particular aspects of the loan or finance company sector that should be considered when making a decision about whether, to whom, and how to delegate examination authority. FinCEN also seeks comment on how frequently, to what extent, and for compliance with

[27] *See* 12 U.S.C. 5102(3)(A)(ii).

[28] *See* 31 CFR 103.15–103.21.

[29] *See* note 6, *supra.*

[30] *See* Initiatives Speech, page 4.

[31] *See* Filing Trends in Mortgage Loan Fraud, Feb. 2009, page 1, *http://www.fincen.gov/news_room/nr/pdf/20090225a.pdf.*

[32] *See, e.g.,* 31 CFR 103.56(b)(8).

what laws and regulations loan or finance companies are examined by various state or other regulators and whether such examination processes may be relied on or otherwise used to help in examination for compliance with the BSA.

II. Section-by-Section Analysis

A. Definition of Loan or Finance Company

Section 103.11(ddd) defines the key terms used in the proposed rules. The definitions reflect FinCEN's determination that the term "loan or finance company" should be limited, at this time, to residential mortgage lenders and originators, and that AML program and SAR requirements should be applied first to these businesses, and later as part of a phased approach applied to other consumer and commercial loan and finance companies. The definition of a loan or finance company includes entities that engage in activities within the United States, whether or not through an agent, agency, branch or office, and does not include banks or entities registered with and functionally regulated or examined by the Securities and Exchange Commission or the Commodity Futures Trading Commission. Additionally, a loan or finance company does not include an individual employed by a loan or finance company or other financial institution.

Residential mortgage lender is defined as "[t]he person to whom the debt arising from a residential mortgage loan is initially payable on the face of the evidence of indebtedness or, if there is no such evidence of indebtedness, by agreement, or to whom the obligation is initially assigned at or immediately after settlement." The definition specifically excludes an individual who finances the sale of their own dwelling or real property.

Residential mortgage originator is defined as a person who "takes a residential mortgage loan application and offers or negotiates terms of a residential mortgage loan for compensation or gain."

Residential mortgage loan is defined as any loan "that is secured by a mortgage, deed of trust, or other equivalent consensual security interest" on a 1-to-4 family residential structure or real estate on which a residential structure will be built. This definition is intended to encompass any loan secured by residential real property, regardless of whether the borrower is purchasing the residential real property as a primary residence, vacation home or investment, is refinancing a purchase-money mortgage loan to obtain a more favorable rate and/or terms, or is obtaining a mortgage loan for another purpose, such as debt consolidation or mobilization of home equity. For this definition, residential real property is intended to be a broad category, including condominiums, co-ops, mobile homes intended to be used as dwellings, vacation homes, and time shares.

Comment is specifically invited on whether the above definitions are appropriate in light of money laundering risks in the industry and the strategic and policy goals set forth in this notice and in the 2003 and 2009 ANPRMs. Comment also is specifically invited on whether the final rule also should require agents and brokers of residential mortgage lenders and originators, or any subsets of agents or brokers, to adopt AML programs and report suspicious transactions. Finally, comment is specifically invited on whether the proposed definition of "residential mortgage loan" manifests with adequate clarity FinCEN's stated intent for the definition.

B. Reports of Suspicious Transactions

Section 103.14(a) contains the rules setting forth the obligation of loan or finance companies to report suspicious transactions that are conducted or attempted by, at, or through a loan or finance company and involve or aggregate at least $5,000 in funds or other assets. It is important to recognize that transactions are reportable under this rule and 31 U.S.C. 5318(g) regardless of whether they involve currency. The $5,000 minimum amount is consistent with existing SAR filing requirements for financial institutions.

Section 103.14(a)(1) contains the general statement of the obligation to file reports of suspicious transactions. The obligation extends to transactions conducted or attempted by, at, or through a loan or finance company. The rule also contains a provision in section 103.14(a)(1) designed to encourage the reporting of transactions that appear relevant to violations of law or regulation, even in cases in which the rule does not explicitly so require, for example in the case of a transaction falling below the $5,000 threshold in the rule.

Section 103.14(a)(2) specifically describes the four categories of transactions that require reporting. A loan or finance company is required to report a transaction if it knows, suspects, or has reason to suspect that the transaction (or a pattern of transactions of which the transaction is a part): (i) Involves funds derived from illegal activity or is intended or conducted to hide or disguise funds or assets derived from illegal activity; (ii) is designed, whether through structuring or other means, to evade the requirements of the BSA; (iii) has no business or apparent lawful purpose, and the loan or finance company knows of no reasonable explanation for the transaction after examining the available facts; or (iv) involves the use of the loan or finance company to facilitate criminal activity.[33]

A determination as to whether a report is required must be based on all the facts and circumstances relating to the transaction and customer of the loan or finance company in question. Different fact patterns will require different judgments. Some examples of red flags associated with existing or potential customers are referenced in previous FinCEN reports on mortgage fraud and money laundering in the residential and commercial real estate sectors.[34] However, the means of commerce and the techniques of money laundering are continually evolving, and there is no way to provide an exhaustive list of suspicious transactions. FinCEN will continue to pursue a regulatory approach that involves a combination of guidance, training programs, and government-industry information exchange so that implementation of any new AML program and SAR reporting regulations can be implemented by covered businesses in as flexible and cost efficient way as possible, while protecting the sector and the financial system as a whole from fraud, money laundering and other financial crimes.

Section 103.14(a)(3) provides that the obligation to identify and to report a suspicious transaction rests with the loan or finance company involved in the transaction. However, where more than one loan or finance company, or another financial institution with a separate suspicious activity reporting obligation, is involved in the same transaction, only one report is required to be filed, provided it contains all relevant facts and each institution maintains a copy of the report and any supporting documentation.

The proposed rule is intended to require that a loan or finance company evaluate customer activity and

[33] The fourth reporting category has been added to the suspicious activity reporting rules promulgated since the passage of the USA PATRIOT Act to make it clear that the requirement to report suspicious activity encompasses the reporting of transactions involving fraud and those in which legally derived funds are used for criminal activity, such as the financing of terrorism.

[34] *See* note 21, *supra.*

relationships for fraud, money laundering and other financial crime risks, and design a suspicious transaction monitoring program that is appropriate for the particular loan or finance company in light of such risks.

Section 103.14(b) sets forth the filing procedures to be followed by loan or finance companies making reports of suspicious transactions. Within 30 days after a loan or finance company becomes aware of a suspicious transaction, the business must report the transaction by completing a SAR and filing it with FinCEN. Supporting documentation relating to each SAR is to be collected and maintained separately by the loan or finance company and made available to FinCEN or any Federal, state, or local law enforcement agency, or any Federal regulatory authority that examines the loan or finance company for compliance with the BSA, or any state regulatory authority that examines the loan or finance company for compliance with state law requiring compliance with the BSA,[35] upon request. Because supporting documentation has been deemed to have been filed with the SAR, these parties are consistent with those parties to whom a SAR may be disclosed as discussed in the rules of construction, below. For situations requiring immediate attention, loan or finance companies are to telephone the appropriate law enforcement authority in addition to filing a SAR.

Section 103.14(c) provides that filing loan or finance companies must maintain copies of SARs and the underlying related documentation for a period of five years from the date of filing. As indicated above, supporting documentation is to be made available to FinCEN and the prescribed law enforcement and regulatory authorities, upon request.

Section 103.14(d)(1) reinforces the statutory prohibition against the disclosure by a financial institution of a SAR (regardless of whether the report is required by the proposed rule or is filed voluntarily).[36] Thus, the section requires that a SAR and information that would reveal the existence of that SAR ("SAR information") be kept confidential and not be disclosed except as authorized within the rules of construction. The proposed rule includes rules of construction that identify actions an institution may take that are not precluded by the confidentiality provision. These actions include the disclosure of SAR information to FinCEN, or Federal, State, or local law enforcement agencies, or a Federal regulatory authority that examines the loan or finance company for compliance with the BSA, or a state regulatory authority that examines the loan or finance company for compliance with state law requiring compliance with the BSA.[37] This confidentiality provision also does not prohibit the disclosure of the underlying facts, transactions, and documents upon which a SAR is based, or the sharing of SAR information within the loan or finance company's corporate organizational structure for purposes consistent with Title II of the BSA as determined by FinCEN in regulation or in guidance.[38]

Section 103.14(d)(2) incorporates the statutory prohibition against disclosure of SAR information, other than in fulfillment of their official duties consistent with the BSA, by government users of SAR data. The section also clarifies that official duties do not include the disclosure of SAR information in response to a request by a non-governmental entity for non-public information [39] or for use in a private legal proceeding, including a request under 31 CFR 1.11.[40]

Section 103.14(e) provides protection from liability for making reports of suspicious transactions, and for failures to disclose the fact of such reporting to the full extent provided by 31 U.S.C. 5318(g)(3).

Section 103.14(f) notes that compliance with the obligation to report suspicious transactions will be examined by FinCEN or its delegates, and provides that failure to comply with the rule may constitute a violation of the BSA and the BSA regulations.

Section 103.14(g) provides that the new SAR requirement applies to transactions occurring after the later of six months from the effective date of a final rule or the establishment of a business entity subject to the rules.

C. Anti-Money Laundering Program

Section 103.142(a) requires that each loan or finance company develop and implement an anti-money laundering program reasonably designed to prevent the loan or finance company from being used to facilitate money laundering or the financing of terrorist activities. The program must be in writing and must be approved by senior management. A loan or finance company's written program also must be made available to FinCEN upon request. The minimum requirements for the AML program are set forth in section 103.142(b). Beyond these minimum requirements, however, the proposed rule is intended to give loan or finance companies the flexibility to design their programs to mitigate their own enterprise-specific risks.

Section 103.142(b) sets forth the minimum requirements of a loan or finance company's AML program. Section 103.142(b)(1) requires the AML program to incorporate policies, procedures, and internal controls based upon the loan or finance company's assessment of the money laundering and terrorist financing risks associated with its products, customers, distribution channels, and geographic locations. As explained above, a loan or finance company's assessment of customer-related information, such as methods of payment, is a key component to an effective AML program. Thus, a loan or finance company's AML program must ensure that the company obtains all the information necessary to make its AML program effective. Such information includes, but is not limited to, relevant customer information collected and maintained by the loan or finance company's agents and brokers. The specific means to obtain such information is left to the discretion of the loan or finance company, although FinCEN anticipates that the loan or finance company may need to amend existing agreements with its agents and brokers to ensure that the company receives necessary customer information. For purposes of making the required risk assessment, a loan or

[35] State regulatory authorities are generally authorized by state law to examine for compliance with the BSA in one of two ways: (1) The law authorizes the state authority to examine the institution for compliance with all Federal laws and regulations generally or with the BSA explicitly, or (2) the law requires a financial institution to comply with all Federal laws and regulations generally or with the BSA explicitly, and authorizes the State authority to examine for compliance with the State law. An institution may provide SAR information to a state regulatory authority meeting either criterion.

[36] *See* 31 U.S.C. 5318(g)(2).

[37] *See* note 38, *supra.*

[38] On January 20, 2006, FinCEN issued guidance for the banking, securities, and futures industries authorizing the sharing of SAR information with parent companies, head offices, or controlling companies. To date, no such guidance has been issued for the loan or finance industry.

[39] For purposes of this rulemaking, "non-public information" refers to information that is exempt from disclosure under the Freedom of Information Act.

[40] 31 CFR 1.11 is the Department of the Treasury's information disclosure regulation. Generally, these regulations are known as "Touhy regulations," after the Supreme Court's decision in *United States ex rel. Touhy* v. *Ragen,* 340 U.S. 462 (1951). In that case, the Supreme Court held that an agency employee could not be held in contempt for refusing to disclose agency records or information when following the instructions of his or her supervisor regarding the disclosure. An agency's Touhy regulations are the instructions agency employees must follow when those employees receive requests or demands to testify or otherwise disclose agency records or information.

finance company must consider all relevant information.

Policies, procedures, and internal controls also must be reasonably designed to ensure compliance with BSA requirements. Loan or finance companies may conduct some of their operations through agents and third-party service providers. Some elements of the compliance program may best be performed by personnel of these entities, in which case it is permissible for a loan or finance company to delegate contractually the implementation and operation of those aspects of its AML program to such an entity. Any loan or finance company that delegates responsibility for aspects of its AML program to an agent or a third party, however, remains fully responsible for the effectiveness of the program, as well as ensuring that compliance examiners are able to obtain information and records relating to the AML program.

Section 103.142(b)(2) requires that a loan or finance company designate a compliance officer to be responsible for administering the AML program. A loan or finance company may designate a single person or committee to be responsible for compliance. The person or persons should be competent and knowledgeable regarding BSA requirements and money laundering issues and risks, and should be empowered with full responsibility and authority to develop and enforce appropriate policies and procedures. The role of the compliance officer is to ensure that (1) the program is implemented effectively; (2) the program is updated as necessary; and (3) appropriate persons are trained and educated in accordance with section 103.142(b)(3).

Section 103.142(b)(3) requires that a loan or finance company provide for education and training of appropriate persons. Employee training is an integral part of any AML program. In order to carry out their responsibilities effectively, employees of a loan or finance company (and of any agent or third-party service provider) with responsibility under the program must be trained in the requirements of the rule and money laundering risks generally so that red flags associated with existing or potential customers can be identified. Such training may be conducted by outside or in-house seminars, and may include computer-based training. The nature, scope, and frequency of the education and training program of the loan or finance company will depend upon the employee functions performed. However, those with obligations under the AML program must be sufficiently trained to carry out their responsibilities effectively. Moreover, these employees should receive periodic updates and refreshers regarding the AML program.

Section 103.142(b)(4) requires that a loan or finance company provide for independent testing of the program on a periodic basis to ensure that it complies with the requirements of the rule and that the program functions as designed. An outside consultant or accountant need not perform the test. The review may be conducted by an officer, employee or group of employees, so long as the reviewer is not the designated compliance officer and does not report directly to the compliance officer. The frequency of the independent testing will depend upon the loan or finance company's assessment of the risks posed. Any recommendations resulting from such testing should be implemented promptly or reviewed by senior management.

Section 103.142(c) states that compliance with the AML program requirements will be determined by FinCEN or its delegates, under the terms of the BSA.

III. Proposed Location in Chapter X

As discussed in a previous **Federal Register** Notice,[41] FinCEN is separately proposing to remove part 103 of chapter I of title 31, Code of Federal Regulations, and add the reorganized contents of part 103 as new parts 1000 to 1099 ("chapter X"). If the notice of proposed rulemaking for chapter X is finalized, the changes in the present proposed rule would be reorganized according to the proposed Chapter X. The planned reorganization will have no substantive effect on the regulatory changes herein. The regulatory changes of this specific rulemaking would be renumbered according to the proposed Chapter X as follows:

(a) 103.11 would be moved to 1010.100;

(b) 103.14 would be moved to 1029.320; and

(c) 103.142 would be moved to 1029.210.

IV. Regulatory Flexibility Act

When an agency issues a rulemaking proposal, the Regulatory Flexibility Act ("RFA") requires the agency to "prepare and make available for public comment an initial regulatory flexibility analysis," which will "describe the impact of the proposed rule on small entities."[42] Section 605 of the RFA allows an agency to certify a rule, in lieu of preparing an analysis, if the proposed rulemaking is not expected to have a significant economic impact on a substantial number of small entities.

Estimate of the number of small entities to which the proposed rule will apply:

For the purpose of arriving at an estimated number of residential mortgage lenders and originators, FinCEN is relying on information gathered from various public sources, including major trade associations and associations of government regulators. Estimates based on this data suggest that as of 2010 there are approximately 31,000 qualifying entities in the United States, down from approximately 42,000 in 2009. FinCEN also referred to information gathered from the NAICS codes,[43] which lists loan and finance companies as NAICS codes 522292 (Real Estate Credit) and 522310 (Mortgage and Nonmortgage Loan Brokers). The U.S. Census Bureau estimated there were about 36,275 entities in these classifications in 2002. However, these classifications include services that are outside of those provided by loan and finance companies (*i.e.* bank lenders), so the number of loan or finance companies to which this proposed rule is applicable could be significantly less. Within this classification, those entities that have less than 7 million dollars in gross revenue are considered small. FinCEN estimates that 95% of the affected industry is considered a small business, and that the proposed regulation would affect all of them.

Description of the projected reporting and recordkeeping requirements of the proposed rule:

The proposed rule would require loan and finance companies to maintain AML programs and file reports on suspicious transactions. By requiring this, FinCEN is addressing vulnerabilities in the U.S. financial system and is leveling the playing field between bank and non-bank lenders. FinCEN does not foresee a significant impact on the regulated industry from these requirements. Loan or finance companies, as a usual and customary part of their business for each transaction, conduct a significant amount of due diligence on both the property securing the loan and the borrower. This process of due diligence involves the types of inquiry and collecting the types of information that would be expected in any program to prevent money laundering and fraud

[41] 73 FR 66414 (Nov. 7, 2008).

[42] 5 U.S.C. 603(a).

[43] *See* note 24, *supra.*

and to detect and report suspicious transactions.[44]

AML Program Requirement in General

The proposed rule would not impose significant burdens on loan and finance companies. These companies may build on their existing risk management procedures and prudential business practices to ensure compliance with this rule. FinCEN and other agencies have issued substantial guidance on the development of AML programs and SAR reporting requirements.[45] Most loan and finance companies subject to the proposed rule would not need to obtain more sophisticated legal or accounting advice than that already required to run their businesses. Residential mortgage lenders and originators undertake thorough due diligence of borrowers and collateral to assess the credit risk associated with a particular loan. The information gathered by these businesses generally is the same as, or very similar to, the information that would be expected in any programs to prevent money laundering and detect and report suspicious transactions. FinCEN seeks comment on the extent to which AML programs or SAR reporting requirements would require affected businesses to conduct a degree of due diligence, or collect an amount of information, beyond that presently conducted to assess credit worthiness and minimize losses due to fraud.

Finally, FinCEN believes that the flexibility incorporated into the proposed rule would permit each loan or finance company to tailor its AML program to fit its own size and needs. In this regard, FinCEN believes that expenditures associated with establishing and implementing an AML program will be commensurate with the size and risk profile of a loan or finance company. If a loan or finance company is small or does not engage in high risk transactions, therefore, the burden to comply with the proposed rule should be minimal. FinCEN estimates that the impact of this requirement would not be significant.

Suspicious Activity Reporting

The proposed rule would require loan and finance companies to report on transactions of $5,000 or more which they determine to be suspicious. Loan and finance companies have not been previously required to comply with such a requirement under regulation. However, as noted above, most loan and finance companies, in order to remain viable, have in place policies and procedures to prevent and detect fraud. Such anti-fraud measures should assist loan and finance companies in reporting suspicious transactions. Many loan and finance companies already voluntarily report suspicious transactions and fraud through entities such as the Loan Modification Scam Prevention Network.[46] Additionally, loan and finance companies, as part of the application process for loans, already gather the information necessary to fill out SAR forms as a usual and customary part of their business. It is likely that the software packages most such companies already use will, after this proposed regulation, incorporate the ability to automatically fill out all but the narrative field in a SAR based on information already input for the loan application.[47] Therefore, FinCEN estimates that the burden of the SAR filing requirements for loan and finance companies would be low.

Certification

The additional burden proposed by the rule would be a requirement to maintain an AML program and a SAR filing requirement. As discussed above, FinCEN estimates that the impact from these requirements would not be significant. Accordingly, FinCEN certifies that the proposed rule would not have a significant impact on a substantial number of small entities.

Questions for Comment:

1. Please provide comment on any or all of the provisions in the proposed rule with regard to (a) the impact of the provision(s) (including any benefits and costs), if any, in carrying out responsibilities under the proposed rule and (b) what less burdensome alternatives if any, FinCEN should consider.

2. Please provide comment regarding whether the AML program and SAR reporting requirements proposed in this rule would require entities to gather any information not already gathered as part of the due diligence, underwriting, and compliance process and provide specific examples of such information.

V. Paperwork Reduction Act Notices

The collection of information contained in this proposed rule is being submitted to OMB for review in accordance with the Paperwork Reduction Act of 1995 ("PRA").[48] Comments on the collection of information should be sent (preferably by fax (202–395–6974)) to Desk Officer for the Department of the Treasury, Office of Information and Regulatory Affairs, Office of Management and Budget, Paperwork Reduction Project (1506), Washington, DC 20503 or by the Internet to *OIRA_submission@omb.eop.gov,* with a copy to the FinCEN by mail. Comments on the collection of information should be received by February 7, 2011.

In accordance with the requirements of the PRA,[49] and its implementing regulations, 5 CFR part 1320, the following information concerning the collection of information is presented to assist those persons wishing to comment on the information collection. The information collections in this proposal are contained in 31 CFR 103.14 and 31 CFR 103.142.

AML program for loan and finance companies:

AML programs for loan and finance companies (31 CFR 103.142). This information would be required to be retained pursuant to 31 U.S.C. 5318(h) and proposed 31 CFR 103.142. The collection of information would be mandatory. The information collected would be pursuant to 103.142 and would be used by examiners to

[44] *See, e.g.,* Form 1003 Uniform Residential Mortgage Application, available at *https://www.efanniemae.com/sf/formsdocs/forms/pdf/sellingtrans/1003.pdf* or *http://www.freddiemac.com/uniform/doc/form_65_urla_7_05.doc.*

[45] *See, e.g.,* Guidance—Preparing a Complete and Sufficient Suspicious Activity Report Narrative (including related PowerPoint Presentation—Keys to Writing a Complete and Sufficient SAR Narrative), Nov. 2003, *http://www.fincen.gov/statutes_regs/guidance/html/narrativeguidance_webintro.html;* Guidance—Suggestions for Addressing Common Errors Noted in Suspicious Activity Reporting, Oct. 10, 2007, *http://www.fincen.gov/statutes_regs/guidance/html/SAR_Common_Errors_Web_Posting.html;* Guidance—Suspicious Activity Report Supporting Documentation, June 13, 2007 (FIN–2007–G003), *http://www.fincen.gov/statutes_regs/guidance/html/Supporting_Documentation_Guidance.html.* The SAR Activity Review—Trends, Tips and Issues (Issue 16), Oct. 2009, Section 4, *Law Enforcement Suggestions When Preparing Suspicious Activity Reports,* p. 45., *http://www.fincen.gov/statutes_regs/guidance/html/narrativeguidance_webintro.html. See also* notes 13 and 21, *supra.*

[46] The Loan Modification Scam Prevention Network includes Fannie Mae, Freddie Mac, the Lawyers' Committee for Civil Rights Under Law (Lawyers' Committee) and NeighborWorks America, among others, with representatives from key governmental agencies, such as the Federal Trade Commission, the U.S. Department of Housing and Urban Development (HUD), U.S. Department of Justice, the U.S. Treasury Department, the Federal Bureau of Investigation, and state Attorneys General offices, as well as leading non-profit organizations from across the country. *See http://www.preventloanscams.org/.*

[47] *See* Form 1003 Uniform Residential Mortgage Application, available at *https://www.efanniemae.com/sf/formsdocs/forms/pdf/sellingtrans/1003.pdf* or *http://www.freddiemac.com/uniform/doc/form_65_urla_7_05.doc.*

[48] 44 U.S.C. 3507(d).

[49] *See* 44 U.S.C. 3506(c)(2)(A).

determine whether loan and finance companies comply with the BSA.

Description of Recordkeepers: Loan and finance companies as defined in 31 CFR 103.11(ddd).

Estimated Number of Recordkeepers: 31,000.

Estimated Average Annual Burden Hours per Recordkeeper: The estimated average annual burden associated with the recordkeeping requirement in proposed 31 CFR 103.142 is three hours.

Estimated Total Annual Recordkeeping Burden: FinCEN estimates that the annual recordkeeping burden would be 93,000 hours.

This burden will be included (added to) the existing burden listed under OMB Control Number 1506–0035, currently titled AML Programs for insurance companies. The new title for this control number will become AML Programs for insurance companies and loan and finance companies. The new total burden will 94,200 hours.

SAR filing for loan and finance companies.

SARs for loan and finance companies (proposed 31 CFR 103.14). This information would be required to be provided pursuant to 31 U.S.C. 5318(g) and 31 CFR 103.14. This information would be used by law enforcement agencies in the enforcement of criminal and regulatory laws and to prevent loan and finance companies from engaging in illegal activities. The collection of information is mandatory. The proposal would increase the number of recordkeepers by 31,000.

Description of Recordkeepers: Loan and finance companies as defined in 31 CFR 103.11(ddd).

Estimated Number of Recordkeepers: 31,000.

Estimated Average Annual Burden Hours per Recordkeeper: The estimated average annual burden associated with the recordkeeping requirement in 31 CFR 103.14 is 2 hours per report, and FinCEN estimates that, on average, one report per filer will be filed per year.

Estimated Total Annual Recordkeeping Burden: The proposal would increase the estimated annual burden by 62,000, consisting of one hour for report completion and one hour for required recordkeeping.

This is a new requirement that will require a new OMB Control Number 1506–XXXX.

An agency may not conduct or sponsor, and a person is not required to respond to, a collection of information unless the collection of information displays a valid OMB control number. Records required to be retained under the BSA must be retained for five years.

Questions for Comment:

1. We seek comments on FinCEN's three-hour recordkeeping estimate for the establishment of AML programs by loan and finance companies; whether this estimate is too low; and, if so, an estimate that better reflects industry practices. We also ask commenters to provide an estimate of costs associated with establishing these AML programs, especially with regards to systems and labor costs.

2. We seek comment on FinCEN's two-hour estimate for annual SAR filings by loan and finance companies and whether this estimate is too low. We also ask commenters to provide an estimate of costs associated with the SAR filing requirement.

VI. Executive Order 12866

It has been determined that this proposed rule is a significant regulatory action for purposes of Executive Order 12866.

VII. Unfunded Mandates Act of 1995 Statement

Section 202 of the Unfunded Mandates Reform Act of 1995 ("Unfunded Mandates Act"), Public Law 104–4 (March 22, 1995), requires that an agency prepare a budgetary impact statement before promulgating a rule that may result in expenditure by the state, local, and tribal governments, in the aggregate, or by the private sector, of $100 million or more in any one year. If a budgetary impact statement is required, section 202 of the Unfunded Mandates Act also requires an agency to identify and consider a reasonable number of regulatory alternatives before promulgating a rule. Taking into account the factors noted above and using conservative estimates of average labor costs in evaluating the cost of the burden imposed by the proposed regulation, FinCEN has determined that it is not required to prepare a written statement under section 202.

List of Subjects in 31 CFR Part 103

Administrative practice and procedure, Banks, Banking, Brokers, Currency, Foreign banking, Foreign currencies, Gambling, Investigations, Penalties, Reporting and recordkeeping requirements, Securities, Terrorism.

Authority and Issuance

For the reasons set forth in the preamble, part 103 of title 31 of the Code of Federal Regulations is proposed to be amended as follows:

PART 103—FINANCIAL RECORDKEEPING AND REPORTING OF CURRENCY AND FINANCIAL TRANSACTIONS

1. The authority citation for part 103 continues to read as follows:

Authority: 12 U.S.C. 1829b and 1951–1959; 31 U.S.C. 5311–5314 and 5316–5332; title III, sec. 314 Pub. L. 107–56, 115 Stat. 307.

2. Add new § 103.11(ddd) to read as follows:

§ 103.11 Meaning of terms.

* * * * *

(ddd) *Loan or finance company.* A person engaged in activities that take place wholly or in substantial part within the United States in one or more of the capacities listed below, whether or not on a regular basis or as an organized business concern. This includes but is not limited to maintenance of any agent, agency, branch, or office within the United States. For the purposes of this paragraph (ddd), the term "loan or finance company" shall include a sole proprietor acting as a loan or finance company, and shall not include a bank, a person registered with and functionally regulated or examined by the Securities and Exchange Commission or the Commodity Futures Trading Commission, or an individual employed by a loan or finance company or financial institution under this part.

(1) *Residential mortgage lender or originator.* For purposes of this part:

(i) *Residential mortgage lender.* The person to whom the debt arising from a residential mortgage loan is initially payable on the face of the evidence of indebtedness or, if there is no such evidence of indebtedness, by agreement, or to whom the obligation is initially assigned at or immediately after settlement. The term "residential mortgage lender" shall not include an individual who finances the sale of the individual's own dwelling or real property.

(ii) *Residential mortgage originator.* A person that takes a residential mortgage loan application and offers or negotiates terms of a residential mortgage loan for compensation or gain.

(iii) *Residential mortgage loan.* A loan that is secured by a mortgage, deed of trust, or other equivalent consensual security interest on:

(A) A residential structure that contains one to four units, including, if used as a residence, an individual condominium unit, cooperative unit, mobile home or trailer; or

(B) Residential real estate upon which such a structure is constructed or intended to be constructed.

(2) [Reserved]

3. Add new § 103.14 to subpart B to read as follows:

§ 103.14 Reports by loan or finance companies of suspicious transactions.

(a) *General.* (1) Every loan or finance company shall file with FinCEN, to the extent and in the manner required by this section, a report of any suspicious transaction relevant to a possible violation of law or regulation. A loan or finance company may also file with FinCEN a report of any suspicious transaction that it believes is relevant to the possible violation of any law or regulation, but whose reporting is not required by this section.

(2) A transaction requires reporting under this section if it is conducted or attempted by, at, or through a loan or finance company, it involves or aggregates funds or other assets of at least $5,000, and the loan or finance company knows, suspects, or has reason to suspect that the transaction (or a pattern of transactions of which the transaction is a part):

(i) Involves funds derived from illegal activity or is intended or conducted in order to hide or disguise funds or assets derived from illegal activity (including, without limitation, the ownership, nature, source, location, or control of such funds or assets) as part of a plan to violate or evade any Federal law or regulation or to avoid any transaction reporting requirement under Federal law or regulation;

(ii) Is designed, whether through structuring or other means, to evade any requirements of this part or any other regulations promulgated under the Bank Secrecy Act, Public Law 91–508, as amended, codified at 12 U.S.C. 1829b, 12 U.S.C. 1951–1959, and 31 U.S.C. 5311–5314, 5316–5332;

(iii) Has no business or apparent lawful purpose or is not the sort in which the particular customer would normally be expected to engage, and the loan or finance company knows of no reasonable explanation for the transaction after examining the available facts, including the background and possible purpose of the transaction; or

(iv) Involves use of the loan or finance company to facilitate criminal activity.

(3) More than one loan or finance company may have an obligation to report the same transaction under this section, and other financial institutions may have separate obligations to report suspicious activity with respect to the same transaction pursuant to other provisions of this part. In those instances, no more than one report is required to be filed by the loan or finance company(s) and other financial institution(s) involved in the transaction, provided that the report filed contains all relevant facts, including the name of each financial institution involved in the transaction, the report complies with all instructions applicable to joint filings, and each institution maintains a copy of the report filed, along with any supporting documentation.

(b) *Filing and notification procedures*—(1) *What to file.* A suspicious transaction shall be reported by completing a Suspicious Activity Report ("SAR"), and collecting and maintaining supporting documentation as required by paragraph (c) of this section.

(2) *Where to file.* The SAR shall be filed with the FinCEN in accordance with the instructions to the SAR.

(3) *When to file.* A SAR shall be filed no later than 30 calendar days after the date of the initial detection by the reporting loan or finance company of facts that may constitute a basis for filing a SAR under this section. If no suspect is identified on the date of such initial detection, a loan or finance company may delay filing a SAR for an additional 30 calendar days to identify a suspect, but in no case shall reporting be delayed more than 60 calendar days after the date of such initial detection.

(4) *Mandatory notification to law enforcement.* In situations involving violations that require immediate attention, such as suspected terrorist financing or ongoing money laundering schemes, a loan or finance company shall immediately notify by telephone an appropriate law enforcement authority in addition to filing timely a SAR.

(5) *Voluntary notification to FinCEN.* Any loan or finance company wishing voluntarily to report suspicious transactions that may relate to terrorist activity may call the FinCEN's Financial Institutions Hotline in addition to filing timely a SAR if required by this section.

(c) *Retention of records.* A loan or finance company shall maintain a copy of any SAR filed by the loan or finance company or on its behalf (including joint reports), and the original (or business record equivalent) of any supporting documentation concerning any SAR that it files (or is filed on its behalf), for a period of five years from the date of filing the SAR. Supporting documentation shall be identified as such and maintained by the loan or finance company, and shall be deemed to have been filed with the SAR. The loan or finance company shall make all supporting documentation available to FinCEN or any Federal, state, or local law enforcement agency, any Federal regulatory authority that examines the loan or finance company for compliance with the Bank Secrecy Act, or any state regulatory authority that examines the loan or finance company for compliance with state law requiring compliance with the BSA upon request.

(d) *Confidentiality of SARs.* A SAR, and any information that would reveal the existence of a SAR, are confidential and shall not be disclosed except as authorized in this paragraph (d). For purposes of this paragraph (d) only, a SAR shall include any suspicious activity report filed with FinCEN pursuant to any regulation in this part.

(1) *Prohibition on disclosures by loan or finance companies*—(i) *General rule.* No loan or finance company, and no director, officer, employee, or agent of any loan or finance company, shall disclose a SAR or any information that would reveal the existence of a SAR. Any loan or finance company, and any director, officer, employee, or agent of any loan or finance company that is subpoenaed or otherwise requested to disclose a SAR or any information that would reveal the existence of a SAR, shall decline to produce the SAR or such information, citing this section and 31 U.S.C. 5318(g)(2)(A)(i), and shall notify FinCEN of any such request and the response thereto.

(ii) *Rules of construction.* Provided that no person involved in any reported suspicious transaction is notified that the transaction has been reported, paragraph (d)(1) of this section shall not be construed as prohibiting:

(A) The disclosure by a loan or finance company, or any director, officer, employee, or agent of a loan or finance company of:

(*1*) A SAR, or any information that would reveal the existence of a SAR, to FinCEN or any Federal, State, or local law enforcement agency, any Federal regulatory authority that examines the loan or finance company for compliance with the Bank Secrecy Act, or any state regulatory authority that examines the loan or finance company for compliance with state law requiring compliance with the BSA; or

(*2*) The underlying facts, transactions, and documents upon which a SAR is based, including disclosures to another financial institution, or any director, officer, employee, or agent of a financial institution, for the preparation of a joint SAR; or

(B) The sharing by a loan or finance company, or any director, officer, employee, or agent of the loan or finance company, of a SAR, or any

information that would reveal the existence of a SAR, within the loan or finance company's corporate organizational structure for purposes consistent with Title II of the Bank Secrecy Act as determined by regulation or in guidance.

(2) *Prohibition on disclosures by government authorities.* A Federal, state, local, territorial, or tribal government authority, or any director, officer, employee, or agent of any of the foregoing, shall not disclose a SAR, or any information that would reveal the existence of a SAR, except as necessary to fulfill official duties consistent with Title II of the Bank Secrecy Act. For purposes of this section, official duties shall not include the disclosure of a SAR, or any information that would reveal the existence of a SAR, to a non-governmental entity in response to a request for disclosure of non-public information or a request for use in a private legal proceeding, including a request pursuant to 31 CFR 1.11.

(e) *Limitation on liability.* A loan or finance company, and any director, officer, employee, or agent of any loan or finance company, that makes a voluntary disclosure of any possible violation of law or regulation to a government agency or makes a disclosure pursuant to this section or any other authority, including a disclosure made jointly with another institution, shall be protected from liability for any such disclosure, or for failure to provide notice of such disclosure to any person identified in the disclosure, or both, to the full extent provided by 31 U.S.C. 5318(g)(3).

(f) *Compliance.* Loan or finance companies shall be examined by FinCEN or its delegates under the terms of the Bank Secrecy Act, for compliance with this section. Failure to satisfy the requirements of this section may be a violation of the Bank Secrecy Act and of this part.

(g) *Applicability date.* This section applies to transactions initiated after an anti-money laundering program required by section 103.142 of this part is required to be implemented.

4. Add new § 103.142 to subpart I to read as follows:

§ 103.142 Anti-money laundering programs for loan or finance companies.

(a) *Anti-money laundering program requirements for loan or finance companies.* Each loan or finance company shall develop and implement a written anti-money laundering program that is reasonably designed to prevent the loan or finance company from being used to facilitate money laundering or the financing of terrorist activities. The program must be approved by senior management. A loan or finance company shall make a copy of its anti-money laundering program available to the Financial Crimes Enforcement Network, or its designee upon request.

(b) *Minimum requirements.* At a minimum, the anti-money laundering program shall:

(1) Incorporate policies, procedures, and internal controls based upon the loan or finance company's assessment of the money laundering and terrorist financing risks associated with its products and services. Policies, procedures, and internal controls developed and implemented by a loan or finance company under this section shall include provisions for complying with the applicable requirements of subchapter II of chapter 53 of title 31, United States Code and this part, integrating the company's agents and brokers into its anti-money laundering program, and obtaining all relevant customer-related information necessary for an effective anti-money laundering program.

(2) Designate a compliance officer who will be responsible for ensuring that:

(i) The anti-money laundering program is implemented effectively, including monitoring compliance by the company's agents and brokers with their obligations under the program;

(ii) The anti-money laundering program is updated as necessary; and

(iii) Appropriate persons are educated and trained in accordance with paragraph (b)(3) of this section.

(3) Provide for on-going training of appropriate persons concerning their responsibilities under the program. A loan or finance company may satisfy this requirement with respect to its employees, agents, and brokers by directly training such persons or verifying that such persons have received training by a competent third party with respect to the products and services offered by the loan or finance company.

(4) Provide for independent testing to monitor and maintain an adequate program, including testing to determine compliance of the company's agents and brokers with their obligations under the program. The scope and frequency of the testing shall be commensurate with the risks posed by the company's products and services. Such testing may be conducted by a third party or by any officer or employee of the loan or finance company, other than the person designated in paragraph (b)(2) of this section.

(c) *Compliance.* Compliance with this section shall be examined by FinCEN or its delegates, under the terms of the Bank Secrecy Act. Failure to comply with the requirements of this section may constitute a violation of the Bank Secrecy Act and of this part.

(d) *Effective date.* A loan or finance company must develop and implement an anti-money laundering program that complies with the requirements of this section on or before the later of six months from the effective date of the regulation, or six months after the date a loan or finance company is established and becomes subject to the requirements of this section.

5. Amend § 103.170 as follows:

a. Remove paragraph (b)(1)(ii).

b. Redesignate paragraphs (b)(1)(iii) through (b)(1)(x) as paragraphs (b)(1)(ii) through (b)(1)(ix) respectively.

Dated: December 2, 2010.

James H. Freis, Jr.,

Director, Financial Crimes Enforcement Network.

[FR Doc. 2010–30765 Filed 12–8–10; 8:45 am]

BILLING CODE 4802–10–P

DEPARTMENT OF HOMELAND SECURITY

Coast Guard

33 CFR Part 117

[Docket No. USCG–2010–0612]

RIN 1625–AA09

Drawbridge Operation Regulation; Isle of Wight (Sinepuxent) Bay, Ocean City, MD

AGENCY: Coast Guard, DHS.

ACTION: Notice of proposed rulemaking.

SUMMARY: The Coast Guard proposes to change the regulations that govern the operation of the US 50 Bridge over Isle of Wight (Sinepuxent) Bay, mile 0.5, at Ocean City, MD. This proposed rule will require any mariner requesting an opening in the evening hours during the off-season, to do so before the tender office has vacated for the night. The proposed change will ensure draw tender availability for every scheduled opening. The Coast Guard also proposes to change the waterway location from Isle of Wight Bay to Isle of Wight (Sinepuxent) Bay. This waterway is known locally as both Isle of Wight Bay and Sinepuxent Bay.

DATES: Comments and related material must reach the Coast Guard on or before February 7, 2011.

ADDRESSES: You may submit comments identified by docket number USCG–

2010–0612 using any one of the following methods:

(1) *Federal eRulemaking Portal: http://www.regulations.gov.*

(2) *Fax:* 202–493–2251.

(3) *Mail:* Docket Management Facility (M–30), U.S. Department of Transportation, West Building Ground Floor, Room W12–140, 1200 New Jersey Avenue, SE., Washington, DC 20590–0001.

(4) *Hand delivery:* Same as mail address above, between 9 a.m. and 5 p.m., Monday through Friday, except Federal holidays. The telephone number is 202–366–9329.

To avoid duplication, please use only one of these four methods. See the "Public Participation and Request for Comments" portion of the **SUPPLEMENTARY INFORMATION** section below for instructions on submitting comments.

FOR FURTHER INFORMATION CONTACT: If you have questions on this proposed rule, call or e-mail Ms. Lindsey Middleton, Fifth District Bridge Administration Division, Coast Guard; telephone 757–398–6629, e-mail *Lindsey.R.Middleton@uscg.mil.* If you have questions on viewing or submitting material to the docket, call Renee V. Wright, Program Manager, Docket Operations, telephone 202–366–9826.

SUPPLEMENTARY INFORMATION:

Public Participation and Request for Comments

We encourage you to participate in this rulemaking by submitting comments and related materials. All comments received will be posted, without change to *http://www.regulations.gov* and will include any personal information you have provided.

Submitting Comments

If you submit a comment, please include the docket number for this rulemaking (USCG–2010–0612), indicate the specific section of this document to which each comment applies, and provide a reason for each suggestion or recommendation. You may submit your comments and material online (*http://www.regulations.gov*), or by fax, mail or hand delivery, but please use only one of these means. If you submit a comment online via *http://www.regulations.gov,* it will be considered received by the Coast Guard when you successfully transmit the comment. If you fax, hand deliver, or mail your comment, it will be considered as having been received by the Coast Guard when it is received at the Docket Management Facility. We recommend that you include your name and a mailing address, an e-mail address, or a phone number in the body of your document so that we can contact you if we have questions regarding your submission.

To submit your comment online, go to *http://www.regulations.gov,* click on the "submit a comment" box, which will then become highlighted in blue. In the "Document Type" drop down menu select "Proposed Rules" and insert "USCG–2010–0612" in the "Keyword" box. Click "Search" then click on the balloon shape in the "Actions" column. If you submit your comments by mail or hand delivery, submit them in an unbound format, no larger than 8½ by 11 inches, suitable for copying and electronic filing. If you submit them by mail and would like to know that they reached the Facility, please enclose a stamped, self-addressed postcard or envelope. We will consider all comments and material received during the comment period and may change the rule based on your comments.

Viewing Comments and Documents

To view comments, as well as documents mentioned in this preamble as being available in the docket, go to *http://www.regulations.gov,* click on the "read comments" box, which will then become highlighted in blue. In the "Keyword" box insert "USCG–2010–0612" and click "Search." Click the "Open Docket Folder" in the "Actions" column. You may also visit the Docket Management Facility in Room W12–140 on the ground floor of the Department of Transportation West Building, 1200 New Jersey Avenue, SE., Washington, DC 20590, between 9 a.m. and 5 p.m., Monday through Friday, except Federal holidays. We have an agreement with the Department of Transportation to use the Docket Management Facility.

Privacy Act

Anyone can search the electronic form of comments received into any of our dockets by the name of the individual submitting the comment (or signing the comment, if submitted on behalf of an association, business, labor union, etc.). You may review a Privacy Act notice regarding our public dockets in the January 17, 2008, issue of the **Federal Register** (73 FR 3316).

Public Meeting

We do not now plan to hold a public meeting. But you may submit a request for one using one of the four methods specified under **ADDRESSES**. Please explain why one would be beneficial. If we determine that one would aid this rulemaking, we will hold one at a time and place announced by a later notice in the **Federal Register**.

Basis and Purpose

The Maryland Department of Transportation (MdTA) has requested a change to the operating procedure for the double-leaf bascule US 50 Bridge. This change would require that the draw shall open on signal; except that, from 6 p.m. to 6 a.m., from October 1 to April 30 of every year, the draw shall open on signal if notice is given to the bridge before 6 p.m.

The current regulation, set out in 33 CFR 117.559, requires that the US 50 Bridge over Isle of Wight (Sinepuxent) Bay, mile 0.5, at Ocean City, with a vertical clearance of 13 feet above mean high tide in the closed position, shall open on signal; except from October 1 through April 30 from 6 p.m. to 6 a.m., the draw shall open if at least three hours notice is given and from May 25 through September 15, from 9:25 a.m. to 9:55 p.m., the draw shall open at 25 minutes after and 55 minutes after the hour for a maximum of five minutes to let accumulated vessel pass, except that, on Saturdays from 1 p.m. to 5 p.m., the draw shall open on the hour for all waiting vessels and shall remain in the open position until all waiting vessels pass.

According to the records furnished by MdTA, draw tender logs for the past three years show that there have been little to no requests for bridge openings from October 1 to April 30, between the hours of 6 p.m. and 6 a.m. By providing notice to the bridge tender before 6 p.m., mariners can plan their transits and minimize delay in accordance with the proposed rule.

Discussion of Proposed Rule

The Coast Guard proposes to revise 33 CFR 117.559 for the US 50 bridge, mile 0.5, at Ocean City. The current paragraph would be divided into paragraphs (a) and (b).

Paragraph (a) would contain the proposed rule and require the drawbridge to open on signal from October 1 through April 30, from 6 p.m. to 6 a.m., if notice has been given to the bridge tender before 6 p.m.

Paragraph (b) would contain the existing regulation that states the following: From May 25 through September 15 from 9:25 a.m. to 9:55 p.m. the draw shall open at 25 minutes after and 55 minutes after the hour for a maximum of five minutes to let accumulated vessels pass, except that, on Saturdays from 1 p.m. to 5 p.m., the draw shall open on the hour for all waiting vessels and shall remain in the

open position until all waiting vessels pass.

The change in the operating regulation would ensure a timely bridge opening for mariners during the off-season, from October 1 through April 30 from 6 p.m. to 6 a.m.

The Atlantic Ocean is the alternate route for vessels transiting this section of Isle of Wight (Sinepuxent) Bay. Vessels with a mast height of less than 13 feet can pass underneath the bridge in the closed position at anytime.

The Coast Guard also proposes to change the waterway location at section 117.559 Isle of Wight Bay, by inserting the name Sinepuxent Bay, since this waterway is known locally as both the Isle of Wight Bay and the Sinepuxent Bay.

Regulatory Analyses

We developed this proposed rule after considering numerous statutes and executive orders related to rulemaking. Below we summarize our analyses based on 13 of these statutes or executive orders.

Regulatory Planning and Review

This proposed rule is not a "significant regulatory action" under section 3(f) of Executive Order 12866, Regulatory Planning and Review, and does not require an assessment of potential costs and benefits under section 6(a)(3) of that Order. The Office of Management and Budget has not reviewed it under that Order. The proposed changes are expected to have only a minimal impact on maritime traffic transiting the bridge.

Mariners can plan their trips in accordance with the scheduled bridge openings to minimize delays.

Small Entities

Under the Regulatory Flexibility Act (5 U.S.C. 601–612), we have considered whether this proposed rule would have a significant economic impact on a substantial number of small entities. The term "small entities" comprises small businesses, not-for-profit organizations that are independently owned and operated and are not dominant in their fields, and governmental jurisdictions with populations of less than 50,000.

The Coast Guard certifies under 5 U.S.C. 605(b) that this proposed rule would not have a significant economic impact on a substantial number of small entities. This proposed rule would affect the following entities, some of which might be small entities: the owners or operators of vessels needing to transit the bridge from 6 p.m. to 6 a.m. from October 1 to April 30. This action will not have a significant economic impact on a substantial number of small entities because the rule adds minimal restrictions to the movement of navigation, by requiring mariners from October 1 to April 30, from 6 p.m. to 6 a.m., to give notice to the bridge tender before 6 p.m.

If you think that your business, organization, or governmental jurisdiction qualifies as a small entity and that this rule would have a significant economic impact on it, please submit a comment (*see* **ADDRESSES**) explaining why you think it qualifies and how and to what degree this rule would economically affect it.

Assistance for Small Entities

Under section 213(a) of the Small Business Regulatory Enforcement Fairness Act of 1996 (Pub. L. 104–121), we want to assist small entities in understanding this proposed rule so that they can better evaluate its effects on them and participate in the rulemaking. If the rule would affect your small business, organization, or governmental jurisdiction and you have questions concerning its provisions or options for compliance, please contact Lindsey Middleton, Bridge Management Specialist, Fifth Coast Guard District, (757) 398–6629 or *Lindsey.R.Middleton@uscg.mil.* The Coast Guard will not retaliate against small entities that question or complain about this proposed rule or any policy or action of the Coast Guard.

Collection of Information

This proposed rule would call for no new collection of information under the Paperwork Reduction Act of 1995 (44 U.S.C. 3501–3520).

Federalism

A rule has implications for federalism under Executive Order 13132, Federalism, if it has a substantial direct effect on State or local governments and would either preempt State law or impose a substantial direct cost of compliance on them. We have analyzed this proposed rule under that Order and have determined that it does not have implications for federalism.

Unfunded Mandates Reform Act

The Unfunded Mandates Reform Act of 1995 (2 U.S.C. 1531–1538) requires Federal agencies to assess the effects of their discretionary regulatory actions. In particular, the Act addresses actions that may result in the expenditure by a State, local, or tribal government, in the aggregate, or by the private sector of $100,000,000 (adjusted for inflation) or more in any one year. Though this proposed rule will not result in such an expenditure, we do discuss the effects of this rule elsewhere in this preamble.

Taking of Private Property

This proposed rule would not cause a taking of private property or otherwise have taking implications under Executive Order 12630, Governmental Actions and Interference with Constitutionally Protected Property Rights.

Civil Justice Reform

This proposed rule meets applicable standards in sections 3(a) and 3(b)(2) of Executive Order 12988, Civil Justice Reform, to minimize litigation, eliminate ambiguity, and reduce burden.

Protection of Children

We have analyzed this proposed rule under Executive Order 13045, Protection of Children from Environmental Health Risks and Safety Risks. This rule is not an economically significant rule and would not create an environmental risk to health or risk to safety that might disproportionately affect children.

Indian Tribal Governments

This proposed rule does not have tribal implications under Executive Order 13175, Consultation and Coordination with Indian Tribal Governments, because it would not have a substantial direct effect on one or more Indian tribes, on the relationship between the Federal Government and Indian tribes, or on the distribution of power and responsibilities between the Federal Government and Indian tribes.

Energy Effects

We have analyzed this proposed rule under Executive Order 13211, Actions Concerning Regulations That Significantly Affect Energy Supply, Distribution, or Use. We have determined that it is not a "significant energy action" under that order because it is not a "significant regulatory action" under Executive Order 12866 and is not likely to have a significant adverse effect on the supply, distribution, or use of energy. The Administrator of the Office of Information and Regulatory Affairs has not designated it as a significant energy action. Therefore, it does not require a Statement of Energy Effects under Executive Order 13211.

Technical Standards

The National Technology Transfer and Advancement Act (NTTAA) (15 U.S.C. 272 note) directs agencies to use voluntary consensus standards in their

regulatory activities unless the agency provides Congress, through the Office of Management and Budget, with an explanation of why using these standards would be inconsistent with applicable law or otherwise impractical. Voluntary consensus standards are technical standards (*e.g.,* specifications of materials, performance, design, or operation; test methods; sampling procedures; and related management systems practices) that are developed or adopted by voluntary consensus standards bodies.

This proposed rule does not use technical standards. Therefore, we did not consider the use of voluntary consensus standards.

Environment

We have analyzed this proposed rule under Department of Homeland Security Management Directive 023–01, and Commandant Instruction M16475.lD which guides the Coast Guard in complying with the National Environmental Policy Act of 1969 (NEPA) (42 U.S.C. 4321–4370f), and have made a preliminary determination that this action is one of a category of actions which do not individually or cumulatively have a significant effect on the human environment because it simply promulgates the operating regulations or procedures for drawbridges. We seek any comments or information that may lead to the discovery of a significant environmental impact from this proposed rule.

List of Subjects in 33 CFR Part 117

Bridges.

For the reasons discussed in the preamble, the Coast Guard proposes to amend 33 CFR part 117 as follows:

PART 117—DRAWBRIDGE OPERATION REGULATIONS

1. The authority citation for part 117 continues to read as follows:

Authority: 33 U.S.C. 499; 33 CFR 1.05–1; Department of Homeland Security Delegation No. 0170.1.

2. Revise § 117.559 to read as follows:

§ 117.559 Isle of Wight (Sinepuxent) Bay

The draw of the US 50 Bridge, mile 0.5, at Ocean City, shall open on signal; except:

(a) From October 1 through April 30, from 6 p.m. to 6 a.m., the draw shall open if notice has been given to the bridge tender before 6 p.m.

From May 25 through September 15, from 9:25 a.m. to 9:55 p.m., the draw shall open at 25 minutes after and 55 minutes after the hour for a maximum of five minutes to let accumulated vessels pass, except that on Saturdays, from 1 p.m. to 5 p.m., the draw shall open on the hour for all waiting vessels and shall remain in the open position until all waiting vessels pass.

Dated: November 24, 2010.

William D. Lee,

Rear Admiral, United States Coast Guard, Commander, Fifth Coast Guard District.

[FR Doc. 2010–30918 Filed 12–8–10; 8:45 am]

BILLING CODE 9110–04–P

ENVIRONMENTAL PROTECTION AGENCY

40 CFR Part 271

[EPA–R10–RCRA–2010–0947; FRL–9236–9]

Oregon; Correction of Federal Authorization of the State's Hazardous Waste Management Program

AGENCY: Environmental Protection Agency (EPA).

ACTION: Proposed rule.

SUMMARY: The EPA Region 10 proposes to approve a correction to the State of Oregon's federally authorized RCRA hazardous waste management program. On January 7, 2010, EPA published a final rule under docket EPA–R10–RCRA 2009–0766 granting final authorization for changes the State of Oregon made to its federally authorized RCRA Hazardous Waste Management Program. These authorized changes included, among others, the Federal Recycled Used Oil Management Standards; Clarification rule, promulgated on July 30, 2003. During a post-authorization review of the State of Oregon's regulations, EPA identified that the Oregon Administrative Rules (OAR), related to the federal used oil management requirements (OAR 340–100–0002), had not been updated to include the adoption of the Federal Recycled Used Oil Management Standards; Clarification rule. Therefore, the State did not have an effective state rule and EPA inaccurately referenced this rule in the State's Final Authorization Action published and effective on January 7, 2010. This action will correct the State of Oregon's federally authorized program, by removing the inaccurate authorization reference to the federal Recycled Used Oil Management Standards; Clarification rule.

DATES: Comments on this proposed action must be received in writing on or before January 10, 2011.

ADDRESSES: Submit your comments, identified by Docket ID No. EPA–R10–RCRA–2010–0947, by one of the following methods:

- *http://www.regulations.gov*: Follow the on-line instructions for submitting comments.
- *E-mail: Kocourek.Nina@epa.gov.*
- *Fax:* (206) 553–8509, to the attention of Nina Kocourek.
- *Mail:* Send written comments to Nina Kocourek, U.S. EPA, Region 10, 1200 Sixth Avenue, Suite 900, Mail Stop AWT–122, Seattle, Washington 98101.
- *Hand Delivery or Courier:* Deliver your comments to: Nina Kocourek, U.S. EPA, Region 10, 1200 Sixth Avenue, Suite 900, Mail Stop AWT–122, Seattle, Washington 98101. Such deliveries are only accepted during the Office's normal hours of operation.

For detailed instructions on how to submit comments, please see the direct final rule which is located in the Rules section of this **Federal Register**.

FOR FURTHER INFORMATION CONTACT: Nina Kocourek at (206) 553–6502 or by e-mail at *Kocourek.Nina@epa.gov.*

SUPPLEMENTARY INFORMATION: In the Rules section of this **Federal Register**, EPA is approving Oregon's Authorization of State Hazardous Waste Management Program Revision though a direct final rule without prior proposal because the Agency views this as a noncontroversial action and anticipates no adverse comments to this action. Unless we get written adverse comments which oppose this approval during the comment period, the direct final rule will become effective on the date it establishes, and we will not take further action on this proposal. If EPA receives adverse comments, the direct final rule will be withdrawn and all public comments received will be addressed in a subsequent final rule. EPA will not institute a second comment period on this action. Any parties interested in commenting on this action should do so at this time. For additional information, see the direct rule which is located in the Rules section of this **Federal Register**.

Dated: December 1, 2010.

Dennis J. McLerran,

Regional Administrator, EPA Region 10.

[FR Doc. 2010–31011 Filed 12–8–10; 8:45 am]

BILLING CODE 6560–50–P

DEPARTMENT OF DEFENSE

Defense Acquisition Regulations System

48 CFR Parts 215, 234, 242, 244, 245, and 252

RIN 0750–AG58

Defense Federal Acquisition Regulation Supplement; Business Systems—Definition and Administration (DFARS Case 2009–D038)

AGENCY: Defense Acquisition Regulations System, Department of Defense (DoD).

ACTION: Proposed rule with request for comments; extension of comment period.

SUMMARY: DoD is proposing to amend the Defense Federal Acquisition Regulation Supplement (DFARS) to improve the effectiveness of DoD oversight of contractor business systems. The comment period is being extended an additional 7 days to provide more time for interested parties to review the proposed DFARS changes.

DATES: Comments on the proposed rule should be submitted to the address shown below on or before January 10, 2011.

ADDRESSES: You may submit comments, identified by DFARS Case 2009–D038, using any of the following methods:

○ *Regulations.gov: http://www.regulations.gov.* Submit comments via the Federal eRulemaking portal by inputting "DFARS Case 2009–D038" under the heading "Enter keyword or ID" and selecting "Search." Select the link "Submit a Comment" that corresponds with "DFARS Case 2009–D038." Follow the instructions provided at the "Submit a Comment" screen. Please include your name, company name (if any), and "DFARS Case 2009–D038" on your attached document.

E-mail: dfars@osd.mil. Include DFARS Case 2009–D038 in the subject line of the message.

Fax: 703–602–0350.

Mail: Defense Acquisition Regulations System, Attn: Mr. Mark Gomersall, OUSD (AT&L) DPAP/DARS, Room 3B855, 3060 Defense Pentagon, Washington, DC 20301–3060.

Comments received generally will be posted without change to *http://www.regulations.gov*, including any personal information provided. To confirm receipt of your comment, please check *http://www.regulations.gov* approximately two to three days after submission to verify posting (except allow 30 days for posting of comments submitted by mail).

FOR FURTHER INFORMATION CONTACT: Mr. Mark Gomersall, 703–602–0302.

SUPPLEMENTARY INFORMATION:

I. Background

DoD published a proposed rule for Business Systems—Definition and Administration (DFARS Case 2009–D038) in the **Federal Register** on January 15, 2010 (75 FR 2457). The public comment period closed March 16, 2010. Based on the comments received and subsequent revisions to the proposed rule, DoD published a second proposed rule with request for comments on December 3, 2010 (75 FR 75550). DoD is extending the comment period for 7 additional days to provide more time for interested parties to review the proposed DFARS changes.

Ynette R. Shelkin,

Editor, Defense Acquisition Regulations System.

[FR Doc. 2010–30953 Filed 12–8–10; 8:45 am]

BILLING CODE 5001–08–P

DEPARTMENT OF TRANSPORTATION

National Highway Traffic Safety Administration

49 CFR Parts 501, 509, 510, 511, 512, 520, 523, 525, 526, and 571

[Docket No. NHTSA–2010–0159]

Federal Motor Vehicle Safety Standards; Small Business Impacts of Motor Vehicle Safety

AGENCY: National Highway Traffic Safety Administration (NHTSA), Department of Transportation (DOT).

ACTION: Notice of regulatory review; request for comments.

SUMMARY: NHTSA seeks comments on the economic impact of its regulations on small entities. As required by Section 610 of the Regulatory Flexibility Act, we are attempting to identify rules that may have a significant economic impact on a substantial number of small entities. We also request comments on ways to make these regulations easier to read and understand. The focus of this notice is rules that specifically relate to passenger cars, multipurpose passenger vehicles, trucks, buses, trailers, incomplete vehicles, motorcycles, and motor vehicle equipment.

DATES: You should submit comments early enough to ensure that Docket Management receives them not later than February 7, 2011.

ADDRESSES: You may submit comments [identified by DOT Docket ID Number NHTSA–2010–0054] by any of the following methods:

- *Federal eRulemaking Portal:* Go to *http://www.regulations.gov.* Follow the online instructions for submitting comments.
- *Mail:* Docket Management Facility: U.S. Department of Transportation, 1200 New Jersey Avenue, SE., West Building Ground Floor, Room W12–140, Washington, DC 20590–0001.
- *Hand Delivery or Courier:* West Building Ground Floor, Room W12–140, 1200 New Jersey Avenue, SE., between 9 a.m. and 5 p.m. ET, Monday through Friday, except Federal holidays.
- *Fax:* 202–493–2251.

Instructions: For detailed instructions on submitting comments and additional information see the Comments heading of the **SUPPLEMENTARY INFORMATION** section of this document. Note that all comments received will be posted without change to *http://www.regulations.gov*, including any personal information provided. *Please see* the Privacy Act heading below.

Privacy Act: Anyone is able to search the electronic form of all comments received into any of our dockets by the name of the individual submitting the comment (or signing the comment, if submitted on behalf of an association, business, labor union, etc.). You may review DOT's complete Privacy Act Statement in the **Federal Register** published on April 11, 2000 (65 FR 19477–78) or you may visit *http://DocketsInfo.dot.gov.*

FOR FURTHER INFORMATION CONTACT: Juanita Kavalauskas, Office of Regulatory Analysis, Office of Regulatory Analysis and Evaluation, National Highway Traffic Safety Administration, U.S. Department of Transportation, 1200 New Jersey Avenue, SE., Washington, DC 20590 (telephone 202–366–2584, fax 202–366–3189).

SUPPLEMENTARY INFORMATION:

I. Section 610 of the Regulatory Flexibility Act

A. Background and Purpose

Section 610 of the Regulatory Flexibility Act of 1980 (Pub. L. 96–354), as amended by the Small Business Regulatory Enforcement Fairness Act of 1996 (Pub. L. 104–121), requires agencies to conduct periodic reviews of final rules that have a significant economic impact on a substantial number of small business entities. The purpose of the reviews is to determine whether such rules should be continued without change, or should be amended

or rescinded, consistent with the objectives of applicable statutes, to minimize any significant economic impact of the rules on a substantial number of such small entities.

B. Review Schedule

The Department of Transportation (DOT) published its Semiannual Regulatory Agenda on November 22, 1999, listing in Appendix D (64 FR 64684) those regulations that each operating administration will review under section 610 during the next 12 months. Appendix D contained DOT's 10-year review plan for all of its existing regulations. On November 24, 2008, NHTSA published in the **Federal Register** (73 FR 71401) a revised 10-year review plan for its existing regulations.

The National Highway Traffic Safety Administration (NHTSA, "we") has divided its rules into 10 groups by subject area. Each group will be reviewed once every 10 years, undergoing a two-stage process—an Analysis Year and a Review Year. For purposes of these reviews, a year will coincide with the fall-to-fall publication schedule of the Semiannual Regulatory Agenda. The newly revised 10-year plan will assess years 9 and 10 of the old plan in years 1 and 2 of the new plan. Year 1 (2008) began in the fall of 2008 and will end in the fall of 2009; Year 2 (2009) will begin in the fall of 2009 and will end in the fall of 2010; and so on.

During the Analysis Year, we will request public comment on and analyze each of the rules in a given year's group to determine whether any rule has a significant impact on a substantial number of small entities and, thus, requires review in accordance with section 610 of the Regulatory Flexibility Act. In each fall's Regulatory Agenda, we will publish the results of the analyses we completed during the previous year. For rules that have subparts, or other discrete sections of rules that do have a significant impact on a substantial number of small entities, we will announce that we will be conducting a formal section 610 review during the following 12 months.

The section 610 review will determine whether a specific rule should be revised or revoked to lessen its impact on small entities. We will consider: (1) The continued need for the rule; (2) the nature of complaints or comments received from the public; (3) the complexity of the rule; (4) the extent to which the rule overlaps, duplicates, or conflicts with other Federal rules or with state or local government rules; and (5) the length of time since the rule has been evaluated or the degree to which technology, economic conditions, or other factors have changed in the area affected by the rule. At the end of the Review Year, we will publish the results of our review. The following table shows the 10-year analysis and review schedule:

NATIONAL HIGHWAY TRAFFIC SAFETY ADMINISTRATION SECTION 610 REVIEWS

Year	Regulations to be reviewed	Analysis year	Review year
1	49 CFR 571.223 through 571.500, and parts 575 and 579	2008	2009
2	23 CFR parts 1200 and 1300	2009	2010
3	49 CFR parts 501 through 526 and 571.213	2010	2011
4	49 CFR 571.131, 571.217, 571.220, 571.221, and 571.222	2011	2012
5	49 CFR 571.101 through 571.110, and 571.135, 571.138 and 571.139	2012	2013
6	49 CFR parts 529 through 578, except parts 571 and 575	2013	2014
7	49 CFR 571.111 through 571.129 and parts 580 through 588	2014	2015
8	49 CFR 571.201 through 571.212	2015	2016
9	49 CFR 571.214 through 571.219, except 571.217	2016	2017
10	49 CFR parts 591 through 595 and new parts and subparts	2017	2018

C. Regulations Under Analysis

During Year 3, we will continue to conduct a preliminary assessment of the following sections of 49 CFR parts 501 through 526 and 571.213:

Section	Title
501	Organization and delegation of powers and duties.
509	OMB control numbers for information collection requirements.
510	Information gathering powers.
511	Adjudicative procedures.
512	Confidential business information.
520	Procedures for considering environmental impacts.
523	Vehicle classification.
525	Exemptions from average fuel economy standards.
526	Petitions and plans for relief under the Automobile Fuel Efficiency Act of 1980.
571.213	Child restraint systems.

We are seeking comments on whether any requirements in 49 CFR parts 501 through 526 and 571.213 have a significant economic impact on a substantial number of small entities. "Small entities" include small businesses, not-for-profit organizations that are independently owned and operated and are not dominant in their fields, and governmental jurisdictions with populations under 50,000. Business entities are generally defined as small businesses by Standard Industrial Classification (SIC) code, for the purposes of receiving Small Business Administration (SBA) assistance. Size standards established by SBA in 13 CFR 121.201 are expressed either in number of employees or annual receipts in millions of dollars, unless otherwise specified. The number of employees or annual receipts indicates the maximum allowed for a concern and its affiliates to be considered small. If your business or organization is a small entity and if any of the requirements in 49 CFR parts 501 through 526 and 571.213 have a significant economic impact on your business or organization, please submit a comment to explain how and to what degree these rules affect you, the extent of the economic impact on your business or organization, and why you believe the economic impact is significant.

If the agency determines that there is a significant economic impact on a substantial number of small entities, it will ask for comment in a subsequent notice during the Review Year on how these impacts could be reduced without reducing safety.

II. Plain Language

A. Background and Purpose

Executive Order 12866 and the President's memorandum of June 1, 1998, require each agency to write all rules in plain language. Application of the principles of plain language

includes consideration of the following questions:

- Have we organized the material to suit the public's needs?
- Are the requirements in the rule clearly stated?
- Does the rule contain technical language or jargon that is not clear?
- Would a different format (grouping and order of sections, use of headings, paragraphing) make the rule easier to understand?
- Would more (but shorter) sections be better?
- Could we improve clarity by adding tables, lists, or diagrams?
- What else could we do to make the rule easier to understand?

If you have any responses to these questions, please include them in your comments on this document.

B. Review Schedule

In conjunction with our section 610 reviews, we will be performing plain language reviews over a ten-year period on a schedule consistent with the section 610 review schedule. We will review 49 CFR parts 501 through 526 and 571.213 to determine if these regulations can be reorganized and/or rewritten to make them easier to read, understand, and use. We encourage interested persons to submit draft regulatory language that clearly and simply communicates regulatory requirements, and other recommendations, such as for putting information in tables that may make the regulations easier to use.

Comments

How do I prepare and submit comments?

Your comments must be written and in English. To ensure that your comments are correctly filed in the Docket, please include the docket number of this document in your comments.

Your comments must not be more than 15 pages long. (49 CFR 553.21.) We established this limit to encourage you to write your primary comments in a concise fashion. However, you may attach necessary additional documents to your comments. There is no limit on the length of the attachments.

Please submit two copies of your comments, including the attachments, to Docket Management at the address given above under **ADDRESSES**.

Please note that pursuant to the Data Quality Act, in order for substantive data to be relied upon and used by the agency, it must meet the information quality standards set forth in the OMB and DOT Data Quality Act guidelines. Accordingly, we encourage you to consult the guidelines in preparing your comments. OMB's guidelines may be accessed at *http://www.whitehouse.gov/omb/fedreg/reproducible.html.* DOT's guidelines may be accessed at *http://dmses.dot.gov/submit/DataQualityGuidelines.pdf.*

How can I be sure that my comments were received?

If you wish Docket Management to notify you upon its receipt of your comments, enclose a self-addressed, stamped postcard in the envelope containing your comments. Upon receiving your comments, Docket Management will return the postcard by mail.

How do I submit confidential business information?

If you wish to submit any information under a claim of confidentiality, you should submit three copies of your complete submission, including the information you claim to be confidential business information, to the Chief Counsel, NHTSA, U.S. Department of Transportation, 1200 New Jersey Avenue SE., Washington, DC 20590. In addition, you should submit two copies, from which you have deleted the claimed confidential business information, to Docket Management at the address given above under **ADDRESSES**. When you send a comment containing information claimed to be confidential business information, you should include a cover letter setting forth the information specified in our confidential business information regulation. (49 CFR part 512.)

Will the agency consider late comments?

We will consider all comments that Docket Management receives before the close of business on the comment closing date indicated above under **DATES**. To the extent possible, we will also consider comments that Docket Management receives after that date.

How can I read the comments submitted by other people?

You may read the comments received by Docket Management at the address given above under **ADDRESSES**. The hours of the Docket are indicated above in the same location.

You may also see the comments on the Internet. To read the comments on the Internet, take the following steps:

(1) Go to the Federal Docket Management System (FDMS) at *http://regulations.gov.*

(2) FDMS provides two basic methods of searching to retrieve dockets and docket materials that are available in the system: (a) "Quick Search" to search using a full-text search engine, or (b) "Advanced Search," which displays various indexed fields such as the docket name, docket identification number, phase of the action, initiating office, date of issuance, document title, document identification number, type of document, **Federal Register** reference, CFR citation, etc. Each data field in the advanced search may be searched independently or in combination with other fields, as desired. Each search yields a simultaneous display of all available information found in FDMS that is relevant to the requested subject or topic.

(3) You may download the comments. However, since the comments are imaged documents, instead of word processing documents, the "pdf" versions of the documents are word searchable.

Please note that even after the comment closing date, we will continue to file relevant information in the Docket as it becomes available. Further, some people may submit late comments. Accordingly, we recommend that you periodically check the Docket for new material.

Marilena Amoni,

Associate Administrator for the National Center for Statistics and Analysis.

[FR Doc. 2010–30698 Filed 12–8–10; 8:45 am]

BILLING CODE 4910–59–P

Notices

Federal Register

Vol. 75, No. 236

Thursday, December 9, 2010

This section of the FEDERAL REGISTER contains documents other than rules or proposed rules that are applicable to the public. Notices of hearings and investigations, committee meetings, agency decisions and rulings, delegations of authority, filing of petitions and applications and agency statements of organization and functions are examples of documents appearing in this section.

DEPARTMENT OF AGRICULTURE

Forest Service

Request for Proposals for 2011 Woody Biomass Utilization Grant Program

AGENCY: Forest Service, USDA.

ACTION: Request for proposals.

SUMMARY: The Forest Service, U.S. Department of Agriculture, State and Private Forestry, Technology Marketing Unit, located at the Forest Products Laboratory, requests proposals for wood energy projects that require engineering services. These projects will use woody biomass material removed from forest restoration activities, such as wildfire hazardous fuel treatments, insect and disease mitigation, forest management due to catastrophic weather events, and/or thinning overstocked stands. The woody biomass shall be used in a bioenergy facility that uses commercially proven technologies to produce thermal, electrical, or liquid/gaseous bioenergy. The funds from the Woody Biomass Utilization Grant program (WBU) must be used to further the planning of such facilities by funding the engineering services necessary for final design and cost analysis. Examples of such projects include engineering design of a (1) woody biomass boiler for steam at a sawmill, (2) non-pressurized hot water system for various applications at a hospital or school, and (3) biomass power generation facility, or similar facilities. This program is aimed at helping applicants complete the necessary design work needed to secure public and/or private investment for construction. In particular, USDA Rural Development has established grants and loan programs that might help fund construction of such facilities. However, engineering design must be completed prior to submitting an application to this and other Federal, State, or private funding sources.

DATES: Tuesday, March 1, 2011.

ADDRESSES: All applications must be sent to the respective Forest Service Regional Office listed below for initial review. These offices will be the point of contact for final awards.

Forest Service, Region 1, (MT, ND, Northern ID & Northwestern SD)
ATT: Dave Atkins, USDA Forest Service, Northern Region (R1), Federal Building, 200 East Broadway, Missoula, MT 59807, *datkins@fs.fed.us*, (406) 329–3134

Forest Service, Region 2, (CO, KS, NE, SD, & WY)
ATT: Susan Ford, USDA Forest Service, Rocky Mountain Region (R2), 740 Simms St., Golden, CO 80401–4720, *sbford@fs.fed.us*, (303) 275–5742

Forest Service, Region 3, (AZ & NM)
ATT: Jerry Payne, USDA Forest Service, Southwestern Region (R3), 333 Broadway Blvd., SE., Albuquerque, NM 87102, *jpayne01@fs.fed.us*, (505) 842–3391

Forest Service, Region 4, (Southern ID, NV, UT, & Western WY)
ATT: Scott Bell, USDA Forest Service, Intermountain Region (R4), Federal Building, 324 25th St., Ogden, UT 84401–2300, *sbell@fs.fed.us*, (801) 625–5259

Forest Service, Region 5, (CA, HI, Guam and Trust Territories of the Pacific Islands)
ATT: Janice Gauthier, USDA Forest Service, Pacific Southwest Region (R5), 1323 Club Drive, Vallejo, CA 95492–1110, *jgauthier@fs.fed.us*, (707) 562–8875

Forest Service, Region 6, (OR & WA)
ATT: Ron Saranich, USDA Forest Service, Pacific Northwest Region (R6), 333 SW 1st Ave., Portland, OR 97204, *rsaranich@fs.fed.us*, (503) 808–2346

Forest Service, Region 8, (AL, AR, FL, GA, KY, LA, MS, NC, OK, SC, TN, TX, VA, Virgin Islands & Puerto Rico)
ATT: Tim Mersmann, USDA Forest Service, Southern Region (R8), 1720 Peachtree Rd., NW., Atlanta, GA 30309, *tmersmann@fs.fed.us*, (404) 347–1649

Forest Service, Region 9, (CT, DL, IL, IN, IA, ME, MD, MA, MI, MO, NH, NJ, NY, OH, PA, RI, VT, WV, WI)
ATT: Lew McCreery, Northeastern Area—S&PF, 11 Campus Blvd., Suite 200, Newtown Square, PA 19073–3200, *lmccreery@fs.fed.us*, (304) 285–1538

Forest Service, Region 10, (Alaska)
ATT: Steve Patterson, USDA Forest Service, Alaska Region (R10), 3301 C Street, Suite 202, Anchorage, AK 99503–3956, *spatterson@fs.fed.us*, (907) 743–9451

Detailed information regarding what to include in the application, definitions of terms, eligibility, and necessary prerequisites for consideration are available at *http://www.fpl.fs.fed.us/tmu,* and at *http://www.grants.gov.* Paper copies of the information are also available by contacting the U.S. Forest Service, S&PF Technology Marketing Unit, One Gifford Pinchot Dr., Madison, Wisconsin 53726–2398, 608–231–9518.

FOR FURTHER INFORMATION CONTACT: For questions regarding the grant application or administrative regulations, contact your appropriate Forest Service Regional Biomass Coordinator as listed in the addresses above or contact Susan LeVan-Green, Program Manager of the Technology Marketing Unit, 608–231–9518, *slevan@fs.fed.us.*

Individuals who use telecommunication devices for the deaf (TDD) may call the Federal Relay Service (FRS) at 1–800–877–8339 twenty-four hours a day, every day of the year, including holidays.

SUPPLEMENTARY INFORMATION: To address the goals of Public Law 110–234, *Food, Conservation, and Energy Act of 2008, Rural Revitalization Technologies (7 U.S.C. 6601),* and the anticipated *Department of the Interior, Environment, and Related Agencies Appropriation Act of 2011,* the Agency is requesting proposals to address the nationwide challenge of using low-value woody biomass material to create renewable energy.

Goals of the grant program are:

- Promote projects that target and help remove economic and market barriers to using woody biomass for renewable energy.
- Assist projects that produce renewable energy from woody biomass.
- Reduce forest management costs by increasing the value of biomass and other forest products generated from hazardous fuels reduction and forest health activities on forested lands.
- Create incentives and/or reduce business risk to increase use of woody biomass from our nation's forestlands for renewable energy projects.

Grant Requirements

1. Eligibility Information

a. *Eligible Applicants.* Eligible applicants are businesses, companies, corporations, State, local and tribal governments, school districts, communities, non-profit organizations, or special purpose districts (*e.g.,* public utilities districts, fire districts, conservation districts, or ports). Only one application per business or organization shall be accepted.

b. *Cost Sharing (Matching Requirement).* Applicants shall demonstrate at least a 20 percent match of the total project cost. This match shall be from non-Federal sources, which can include cash or in-kind contributions.

c. *DUNS Number.* All applicants shall include a Dun and Bradstreet, Data Universal Numbering System (DUNS) number in their application. For this requirement, the applicant is the entity that meets the eligibility criteria and has the legal authority to apply and receive a WBU grant. For assistance in obtaining a DUNS number at no cost, call the DUNS number request line 1–866–705–5711 or register on-line at *http://fedgov.dnb.com/webform.*

d. *Central Contractor Registration (CCR).* The applicant acknowledges the requirement that prospective awardees shall be registered in the Central Contractor Registration (CCR) database prior to award, during performance, and through final payment of any grant resulting from this solicitation. Further information can be found at *http://www.ccr.gov.* For assistance, contact the CCR Assistance Center 1–866–606–8220.

2. Award Information

Total funding anticipated for awards is $3.7 million for the 2011 WBU program. Individual grants cannot exceed $250,000. The Federal government's obligation under this program is contingent upon the availability of 2011 appropriated funds. No legal liability on the part of the Government shall be incurred until funds are committed by the grant officer for this program to the applicant in writing. Grants can be for 2 years from the date of award. Written annual financial performance reports and semi-annual project performance reports shall be required and submitted to the appropriate grant officer. The grant funds are taxable income and a Form 1099 Miscellaneous Income will be sent by the U.S. Forest Service to the Internal Revenue Service (IRS). Awardees are expected to follow all Occupational Safety and Health Administration (OSHA) requirements regarding safe working practices and all applicable Federal, State, and local regulations pertinent to the proposed project.

3. Application Prerequisites

This grant program requires that projects have had considerable advance work prior to the grant application. Only applications that have already completed, at minimum (a) a Comprehensive Feasibility Assessment of the project by qualified and credible parties, and (b) a Woody Biomass Resource Supply Assessment, shall be considered. These two reports shall be provided for evidence and demonstration of the viability of the project with the application in the Appendix.

a. The Comprehensive Feasibility Assessment shall address, at minimum, the following items:

- Economic feasibility analysis of site, labor force wages and availability, utilities, access and transportation systems, raw material feedstock needs, and overall economic impact, including job creation and retention, displayed by employment associated with operating the facility itself and supplying the facility (jobs created and jobs retained on a full-time equivalent basis). Also required in the economic analysis is a market feasibility study, including analysis of the market(s) for the power, heat, fuel, or other energy product produced, market area, marketing plans for projected output, if needed, extent of competition for the particular target market(s), extent of competition for supply and delivered costs, and general characterization of supply availability (more detailed information is provided in the Woody Biomass Resource Supply Assessment section).
- Technical feasibility analysis shall include an assessment of the recommended renewable energy technology, what other technologies were considered, why the recommended renewable energy technology was chosen, assessment of site suitability given the recommended renewable energy technology, actions and costs necessary to mitigate environmental impacts sufficient to meet regulatory requirements, developmental costs, capital investment costs, operational costs, projected income, estimated accuracy of these costs and income projections, realistic sensitivity analysis with clear and explicit assumptions, and identification of project constraints or limitations.
- Financial feasibility analysis shall include projected income and cash flow for at least 36 months, description of cost accounting system, availability of short-term credit for operational phase, and *pro forma* with clear and explicit assumptions.
- List of personnel and teams undertaking project development, implementation, and operations, including a clear description of how continuity between project phases will be maintained. Describe the qualification of each team member including education and management experience with the same or similar projects, and how recently this experience occurred.

b. The Woody Biomass Resource Supply Assessment shall provide a description of the available woody biomass resource supply. At a minimum the assessment should address the following items:

- Feedstock location and procurement area relative to the project site;
- Types of biomass fuel available and realistic pricing information based on fuel specifications required by the technology chosen, including explicit break-out of forest-sourced, agricultural-sourced and urban-sourced biomass;
- Volume potentially available by ownership, fuel type, and source of biomass supply, considering recovery rates and other factors, such as Federal, State, and local policy and management practices;
- Volume realistically and economically available by ownership, fuel type, and source of biomass supply, considering recovery rates and other factors, such as Federal, State, and local policy and management practices;
- Detailed risk assessment of future biomass fuel supply including, but not limited to, impacts of potential Federal, State, and local policy changes, availability of additional fuel types, increased competition for biomass resource supply, and changes in transportation costs;
- Summary of total fuel realistically and economically available versus projected annual fuel use (*i.e.* a ratio usually exceeding 2.0:1); and
- Minimum 5-year biomass fuel pricing forecast for material or blend of material meeting fuel specifications delivered to project site (required for financial *pro forma*).

4. Application Evaluation

Applications are evaluated against criteria discussed in Section 5. All applications shall be screened to ensure compliance with the administrative requirements as set forth in this Request for Proposals (RFP). Applications not following the directions for submission shall be disqualified without appeal. Directions can be found at *http://*

www.fpl.fs.fed.us/tmu under Grants and Funding.

The appropriate Forest Service region will provide a preliminary screen based on grant administrative requirements and regional priorities of environmental, social, and economic impacts. Each region may submit up to seven proposals for the nationwide competition. The nationwide competition will consist of a technical and financial review of the proposed project by Federal experts or their designees. Panel reviewers independently evaluate each proposed project for technical and financial merit and assign a score using the criteria listed in Section 5. Technical and financial merits, along with the regional priorities, shall be submitted to the Forest Service national leadership, who make the final decision of the selected projects based on technical and financial merit and regional/national priorities.

5. Evaluation Criteria and Point System

If a reviewer determines that a proposal meets minimum requirements for a criterion, half the number of points will be awarded. More points can be earned if the reviewer determines that a proposal exceeds the minimum and less if the opposite. A maximum of 200 total points can be earned by a proposal.

Criteria

a. Required Comprehensive Feasibility Assessment is thorough and complete, conducted by a qualified and experienced professional team; and project is economically viable using relevant and accepted financial metrics. Total Points 30.

b. Required Woody Biomass Resource Supply Assessment conforms to professional standards for size and complexity of proposed facility, is suitable for appropriate lender or public financing review; and projected biomass quantity and sourcing arrangements from forested land management activities are clearly identified on an annual basis. Total Points 30.

c. Number of projected jobs created and/or retained (direct or indirect) when project goes in service is reasonable and substantiated. Total Points 15.

d. Amount and type of fossil fuel offset in therms/year once project is operational provides impact in geographic area appropriate for size of projected facility and is reasonable and substantiated. Total Points 15.

e. Documentation of partnerships and qualifications necessary for the development and operation of the proposed facility, including roles and directly relevant qualifications of Development, Engineering, Management, Construction, and Operations Teams or similar, are adequate and appropriate for project. Total Points 30.

f. Proposed engineering design components reflect accepted professional standards for type and complexity of proposed facility and are complete. Total Points 20.

g. Financial plan and sources of funding are described in detail for all phases of the project, including, but not limited to, development, construction, and operations. Total Points 30.

h. Detailed description of Federal, State, and local environmental, health and safety regulatory and permitting requirements, and realistic projected timeline for completion are provided. Total Points 30.

6. Application Information

a. Application Submission. Applications shall be post marked by Tuesday, March 1, 2011, and received no later than 5 p.m. on Friday, March 4, 2011. NO EXCEPTIONS. One paper copy and an electronic version shall be submitted to the Regional Biomass Coordinator of your Forest Service region, as listed previously in the **ADDRESSES** section. Your Forest Service region is determined by the State or Forest Service region where the bioenergy facility will be sited. The electronic version submitted to the Regional Biomass Coordinator should be on a USB flash drive or compact disc (CD). No emails shall be accepted. Applications may also be submitted electronically through *http://www.grants.gov.*

b. Application Format. Each submittal shall be in PDF format, with a minimum font size of 11 letters per inch. Top, bottom, and side margins shall be no less than three-quarters of an inch. All pages shall be clearly numbered. Paper copy shall be single sided on 8.5- by 11-inch plain white paper only (no colored paper, over-sized paper, or special covers). Do not staple.

c. Application Content. All forms can be found at *http://www.fpl.fs.fed.us/tmu* under Grants and Funding.

i. Project Narrative.

The project narrative shall provide a clear description of the work to be performed, impact on removing woody biomass and creating renewal energy (*e.g.* tons of biomass removed that would have otherwise been burned, cost savings to landowners, source of biomass removed from forested areas, broken-out by ownership), and how jobs will be created and/or retained and sustained. The project narrative is limited to 10 pages, and excludes Project Summary, SF 424 and SF 424A, budget summary justification, community benefit statement, and letters of support.

The project narrative shall include, but is not limited to, the following:

- Geographical location where project takes place, condition of the forestland(s), and consequences of not doing forest health treatments.
- Current handling and disposal practices for material available for project.
- Proposed woody biomass bioenergy facility, markets and customers, amount of woody biomass that will be used on an annual basis, amount and type of fossil-based fuel offset and recommendations from the Comprehensive Feasibility Assessment.
- Various required elements of the engineering design analysis and bid process. The engineering design analysis shall ensure public safety, compliance with all relevant and applicable laws, regulations, agreements, permits, codes, and standards. Engineering services *shall* only be procured from qualified parties, usually professional engineering firms that assume responsibility and liability for system design. The engineering analysis must be complete, comprehensive, and include site selection, system and component selections, including emissions systems, and system monitoring equipment. Minimum analysis shall include: (1) Fuel specification; (2) equipment specification and design layout; (3) load and power analysis; (4) alternative scenarios with pros and cons of each and associated cost analysis; (5) siting requirements for each scenario; (6) agreements, permits and certifications necessary for each alternative; and (7) bid preparation.
- Brief discussion of qualifications of proposed engineering firm (full description of qualifications and portfolio of designs shall be included in Appendix 3).
- Explanation of how the project will improve efficiencies for harvesting or processing woody biomass into renewable energy.
- Detailed description of technologies that the engineering services will analyze (combustion, two-stage gasification, fermentation, *etc.*).
- Clear explanation of how the project will retain, create, or expand local jobs opportunities once the system is operational, how these jobs will be sustained, and how they will be documented for audit purposes.
- Project work plan, including start and end dates, key tasks, previous

project feasibility studies (as appropriate), and timelines.

• Identification of individuals responsible for implementing and ensuring project success.

• Long-term benefits of project and the length of time the benefits and impacts are anticipated.

• Expansion capability, such as potential to expand the application.

• Environmental documentation and permits, if applicable, and positive and negative environmental consequences to forested lands with and without project.

• Projected reduction in green house gases and water pollution, improvements in wildlife habitats, and adoption of new cleaner technologies.

• Explanation of evaluation and monitoring plans and how these would be implemented to evaluate degree of success.

• Description of accountability and reporting procedures to ensure all requirements of this grant are achieved.

ii. Appendices.

The following information shall be included in appendices to the application in addition to the Comprehensive Feasibility Assessment and Woody Biomass Resource Supply Assessment.

• Qualifications and Portfolio of Engineering Services: For the engineering systems, the project usually consists of a system designer, project manager, equipment supplier, project engineer, construction contractor of system installer, and a system operator and maintainer. One individual or entity may serve more than one role. The project team must have demonstrated expertise in similar bioenergy systems development, engineering, installation, and maintenance. Authoritative evidence that project team service providers have the necessary professional credentials or relevant experience to perform the required services must be provided. Authoritative evidence that vendors of proprietary components can provide necessary equipment and spare parts for the system to operate over its design life must also be provided. A list of the same or similar projects designed, installed, and currently operating with references shall be provided along with appropriate contacts.

• Quotes for Professional Engineering Services Considered (minimum of two quotes): Rationale for selection of engineering firm, if already selected.

• Community Benefit Statement (maximum one page): One page narrative on social, environmental and economic impact and importance of project to community. Include substantiated facts and benefits, such as local employment rate, per capita income and fossil fuel impacts with and without the project. Letters of support from community leaders demonstrating on-going community collaboration, where appropriate. Forest Service regions shall use this information to help evaluate regional impacts, particularly impact of job creation and retention as appropriate at the geographic scale for the region. This information will not be sent forward to technical reviewers.

• Letters of Support from Partners, Individuals, or Organizations: Letters of support shall be included in an appendix and are intended to display the degree of collaboration occurring between the different entities engaged in the project. These letters shall include partner commitments of cash or in-kind services from all those listed in the SF 424 and SF 424A. Each letter of support is limited to one page in length.

• Federal Funds: List all other Federal funds received for this project within the last 3 years. List agency, program name, and dollar amount.

• Administrative Forms: AD 1047, 1048, 1049, SF 424B and certificate regarding lobbying activities are standard forms that need to be included and are required before a grant can be awarded. These forms can be accessed at *http://www.fpl.fs.fed.us/tmu* under Grants and Funding.

c. Application Order. Assemble information in the following order.

• Project Summary (one page limit)

• Application for Federal Assistance SF 424 and Budget Summary SF 424A

• Project Narrative (10 page limit)

• Budget Summary Justification in support of SF 424A (two page limit)

• Appendices

(1) Comprehensive Feasibility Assessment.

(2) Woody Biomass Resource Supply Assessment.

(3) Qualifications and experience portfolio of engineering firm who will do engineering design work.

(4) Quotes for professional engineering services (minimum of two quotes).

(5) Community Benefit Statement (maximum of one page).

(6) Letters of support or commitment.

(7) List of all other federal funds received for this project.

(8) Administrative Forms (found at *http://www.fpl.fs.fed.us/tmu*).

(a) SF 424B Assurances.

(b) AD 1047 Certification Regarding Debarment Primary Tier.

(c) AD 1048 Certification Regarding Debarment Lower Tier.

(d) AD 1049 Certification Regarding Drug Free Workplace.

(e) Certification Regarding Lobbying.

Dated: November 30, 2010.

Robin L. Thompson.

Associate Deputy Chief, State and Private Forestry.

[FR Doc. 2010–30974 Filed 12–8–10; 8:45 am]

BILLING CODE 3410–11–P

COMMISSION ON CIVIL RIGHTS

Sunshine Act Notice

AGENCY: United States Commission on Civil Rights.

ACTION: Notice of meeting.

DATE AND TIME: Friday, December 17, 2010; 9:30 a.m. EST.

PLACE: 624 Ninth Street, NW., Room 540, Washington, DC 20425.

Meeting Agenda

This meeting is open to the public.

I. Approval of Agenda.

II. Welcome New Commissioners.

III. Management and Operations:

- Review of transition, order of succession, continuity of operations.
- Review of 2011 meeting calendar.
- Staff Director's report.

IV. Program Planning: Update and discussion of projects.

- Cy Pres.
- Disparate Impact in School Discipline Policies.
- Gender and the Wage Gap.
- Title IX—Sex Discrimination in Liberal Arts College Admissions.
- Eminent Domain Project.
- NBPP.

V. State Advisory Committee Issues:

- Update on status of North Dakota, Illinois and Minnesota SACs.
- Update on Vermont SAC.

VI. Approval of Minutes of December 3, 2010 Meeting.

VII. Announcements.

VIII. Adjourn.

CONTACT PERSON FOR FURTHER INFORMATION: Lenore Ostrowsky, Acting Chief, Public Affairs Unit (202) 376–8591. *TDD:* (202) 376–8116.

Persons with a disability requiring special services, such as an interpreter for the hearing impaired, should contact Pamela Dunston at least seven days prior to the meeting at 202–376–8105. *TDD:* (202) 376–8116.

Dated: December 7, 2010.

David Blackwood,

General Counsel.

[FR Doc. 2010–31093 Filed 12–7–10; 4:15 pm]

BILLING CODE 6335–01–P

DEPARTMENT OF COMMERCE

International Trade Administration

University of Connecticut, et al.; Notice of Consolidated Decision on Applications for Duty-Free Entry of Electron Microscopes

This is a decision consolidated pursuant to section 6(c) of the Educational, Scientific, and Cultural Materials Importation Act of 1966 (Pub. L. 89–651, as amended by Pub. L. 106–36; 80 Stat. 897; 15 CFR part 301). Related records can be viewed between 8:30 a.m. and 5 p.m. in Room 3720, U.S. Department of Commerce, 14th and Constitution Avenue., NW., Washington, DC.

Docket Number: 10–046. *Applicant:* University of Connecticut, Storrs, CT 06269–6076. *Instrument:* Electron Microscope. *Manufacturer:* FEI Company, Czech Republic. *Intended Use:* See notice at 75 FR 67949, November 4, 2010.

Docket Number: 10–060. *Applicant:* The University of Texas at Arlington, Fort Worth, TX 76118. *Instrument:* Electron Microscope. *Manufacturer:* FEI Company, Czech Republic. *Intended Use:* See notice at 75 FR 67949, November 4, 2010. *Comments:* None received. *Decision:* Approved. No instrument of equivalent scientific value to the foreign instrument, for such purposes as these instruments are intended to be used, was being manufactured in the United States at the time the instruments were ordered. *Reasons:* Each foreign instrument is an electron microscope and is intended for research or scientific educational uses requiring an electron microscope. We know of no electron microscope, or any other instrument suited to these purposes, which was being manufactured in the United States at the time of order of each instrument.

Dated: December 3, 2010.

Gregory W. Campbell,

Acting Director, Subsidies Enforcement Office, Import Administration.

[FR Doc. 2010–30996 Filed 12–8–10; 8:45 am]

BILLING CODE 3510–DS–P

DEPARTMENT OF COMMERCE

International Trade Administration

[A–570–898]

Chlorinated Isocyanurates From the People's Republic of China: Notice of Correction to the Final Results of Antidumping Duty Administrative Review

AGENCY: Import Administration, International Trade Administration, Department of Commerce

DATES: *Effective Date:* December 9, 2010.

FOR FURTHER INFORMATION CONTACT: Brandon Petelin, AD/CVD Operations, Office 8, Import Administration, International Trade Administration, U.S. Department of Commerce, 14th Street and Constitution Avenue, NW., Washington, DC 20230; *telephone:* (202) 482–8173.

SUPPLEMENTARY INFORMATION:

Correction

On November 17, 2010, the Department of Commerce ("Department") published in the **Federal Register** the final results of the 2008–2009 administrative review of the antidumping duty order on chlorinated isocyanurates from the People's Republic of China ("PRC").[1] The period of review covered June 1, 2008, through May 31, 2009. The published **Federal Register** notice contained a ministerial error, in that it listed an incorrect cash deposit rate for respondent Hebei Jiheng Chemical Company Ltd. ("Jiheng") in one section of that notice. Specifically, in the "Final Results of Review" section of the notice, the Department correctly reported a final dumping margin for Jiheng of 2.66 percent; however, in the "Cash Deposit Requirements" section of the notice, the Department erroneously reported Jiheng's cash deposit rate as 1.76 percent.[2] The Department has determined that the rate identified in the "Cash Deposit Requirements" section of the *Final Results* was an unintentional error. In accordance with section 751(a)(2)(C) of the Tariff Act of 1930, as amended ("the Act"), Jiheng's final dumping margin should serve as the basis for its cash deposit rate. This notice serves to correct the cash deposit rate reported for Jiheng in the *Final Results* and to confirm that the correct final results margin for Jiheng for the 2008–2009 period of review is 2.66 percent.

This correction is published in accordance with sections 751(h) and 777(i) of the Act.

Dated: December 3, 2010.

Paul Piquado,

Acting Deputy Assistant Secretary for Import Administration.

[FR Doc. 2010–30985 Filed 12–8–10; 8:45 am]

BILLING CODE P

[1] *See Chlorinated Isocyanurates from the People's Republic of China: Final Results of 2008–2009 Antidumping Duty Administrative Review,* 75 FR 70212 (November 17, 2010) ("*Final Results*").

[2] *Id.* at 70213.

DEPARTMENT OF COMMERCE

International Trade Administration

The University of Texas at Austin, et al.; Notice of Decision on Applications for Duty-Free Entry of Scientific Instruments

This is a decision pursuant to Section 6(c) of the Educational, Scientific, and Cultural Materials Importation Act of 1966 (Pub. L. 89–651, as amended by Pub. L. 106–36; 80 Stat. 897; 15 CFR part 301). Related records can be viewed between 8:30 a.m. and 5 p.m. in Room 3720, U.S. Department of Commerce, 14th and Constitution Ave, NW., Washington, DC.

Docket Number: 10–064. *Applicant:* The University of Texas at Austin, Center for Electromechanics, Pickle Research Campus, 10100 Burnet Road, Building 133, Austin, Texas 78758–4497. *Instrument:* Hexapod Actuators. *Manufacturer:* ADS International, S.r.l., Italy. *Intended Use:* See notice at 75 FR 67949, November 4, 2010. *Comments:* None received. *Decision:* Approved. We know of no instruments of equivalent scientific value to the foreign instruments described below, for such purposes as this is intended to be used, that was being manufactured in the United States at the time of its order. *Reasons:* The instrument is unique because of its ability to achieve the desired accuracy of +/−2 microns, the stiffness of 400 N/micron, the end mounts ability to rotate up to +/−20 degrees in two axes and a stiffness of 250 N/micron, is actively cooled, and is able to generate 30kN of continuous force for extended periods of time. We know of no instrument, suited to these purposes that was being manufactured in the United States at the time of order of this instrument.

Dated: December 3, 2010.

Gregory W. Campbell,

Director, Subsidies Enforcement Office, Import Administration.

[FR Doc. 2010–30988 Filed 12–8–10; 8:45 am]

BILLING CODE 3510–DS–P

DEPARTMENT OF COMMERCE

International Trade Administration

[A–583–831]

Stainless Steel Sheet and Strip in Coils From Taiwan: Final Results of Antidumping Duty Administrative Review

AGENCY: Import Administration, International Trade Administration, Department of Commerce

SUMMARY: On August 13, 2010, the Department of Commerce (the Department) published the preliminary results of the administrative review of the antidumping duty order on stainless steel sheet and strip in coils (SSSSC) from Taiwan. This review covers twenty producers/exporters of the subject merchandise to the United States. The period of review (POR) is July 1, 2008, through June 30, 2009.

Based on our analysis of the comments received, we have made no changes in the margin calculations. Therefore, the final results do not differ from the preliminary results. The final weighted-average dumping margin for the reviewed firms are listed below in the section entitled "Final Results of Review."

DATES: *Effective Date:* December 9, 2010.

FOR FURTHER INFORMATION CONTACT: Henry Almond, AD/CVD Operations, Office 2, Import Administration, International Trade Administration, U.S. Department of Commerce, 14th Street and Constitution Avenue, NW., Washington, DC 20230; telephone (202) 482–0049.

SUPPLEMENTARY INFORMATION:

Background

This review covers twenty producers/exporters. The Department selected Chia Far Industrial Factory Co., Ltd. (Chia Far) as the only respondent for individual examination in this administrative review.

On August 13, 2010, the Department published in the **Federal Register** the preliminary results of administrative review of the antidumping duty order on SSSSC from Taiwan. *See Stainless Steel Sheet and Strip in Coils From Taiwan: Preliminary Results and Rescission in Part of Antidumping Duty Administrative Review,* 75 FR 49467 (Aug. 13, 2010) (*Preliminary Results*).

We invited parties to comment on our preliminary results of review. On September 2, 2010, and September 13, 2010, we received new factual information and a case brief, respectively, from Yieh United Steel Corporation (YUSCO). On September 23, 2010, we rejected YUSCO's new factual information as being untimely filed. On October 4, 2010, YUSCO requested that we reconsider our decision to reject its September 2, 2010, submission. On October 5, 2010, we declined to reconsider our decision. No other parties commented on our *Preliminary Results.*

The Department has conducted this administrative review in accordance with section 751 of Tariff Act of 1930, as amended (the Act).

Scope of the Order

The products covered by the order are certain stainless steel sheet and strip in coils. Stainless steel is an alloy steel containing, by weight, 1.2 percent or less of carbon and 10.5 percent or more of chromium, with or without other elements. The subject sheet and strip is a flat-rolled product in coils that is greater than 9.5 mm in width and less than 4.75 mm in thickness, and that is annealed or otherwise heat treated and pickled or otherwise descaled. The subject sheet and strip may also be further processed (*e.g.,* cold-rolled, polished, aluminized, coated, *etc.*) provided that it maintains the specific dimensions of sheet and strip following such processing.

The merchandise subject to the order is classified in the Harmonized Tariff Schedule of the United States (HTSUS) at subheadings: 7219.13.00.31, 7219.13.00.51, 7219.13.00.71, 7219.13.00.81, 7219.14.00.30, 7219.14.00.65, 7219.14.00.90, 7219.32.00.05, 7219.32.00.20, 7219.32.00.25, 7219.32.00.35, 7219.32.00.36, 7219.32.00.38, 7219.32.00.42, 7219.32.00.44, 7219.33.00.05, 7219.33.00.20, 7219.33.00.25, 7219.33.00.35, 7219.33.00.36, 7219.33.00.38, 7219.33.00.42, 7219.33.00.44, 7219.34.00.05, 7219.34.00.20, 7219.34.00.25, 7219.34.00.30, 7219.34.00.35, 7219.35.00.05, 7219.35.00.15, 7219.35.00.30, 7219.35.00.35, 7219.90.00.10, 7219.90.00.20, 7219.90.00.25, 7219.90.00.60, 7219.90.00.80, 7220.12.10.00, 7220.12.50.00, 7220.20.10.10, 7220.20.10.15, 7220.20.10.60, 7220.20.10.80, 7220.20.60.05, 7220.20.60.10, 7220.20.60.15, 7220.20.60.60, 7220.20.60.80, 7220.20.70.05, 7220.20.70.10, 7220.20.70.15, 7220.20.70.60, 7220.20.70.80, 7220.20.80.00, 7220.20.90.30, 7220.20.90.60, 7220.90.00.10, 7220.90.00.15, 7220.90.00.60, and 7220.90.00.80. Although the HTSUS subheadings are provided for convenience and customs purposes, the Department's written description of the merchandise under the order is dispositive.

Excluded from the scope of the order are the following: (1) Sheet and strip that is not annealed or otherwise heat treated and pickled or otherwise descaled, (2) sheet and strip that is cut to length, (3) plate (*i.e.,* flat-rolled stainless steel products of a thickness of 4.75 mm or more), (4) flat wire (*i.e.,* cold-rolled sections, with a prepared edge, rectangular in shape, of a width of not more than 9.5 mm), and (5) razor blade steel. Razor blade steel is a flat-rolled product of stainless steel, not further worked than cold-rolled (cold-reduced), in coils, of a width of not more than 23 mm and a thickness of 0.266 mm or less, containing, by weight, 12.5 to 14.5 percent chromium, and certified at the time of entry to be used in the manufacture of razor blades. *See* Chapter 72 of the HTSUS, "Additional U.S. Note" 1(d).

Also excluded from the scope of the order are certain specialty stainless steel products described below. Flapper valve steel is defined as stainless steel strip in coils containing, by weight, between 0.37 and 0.43 percent carbon, between 1.15 and 1.35 percent molybdenum, and between 0.20 and 0.80 percent manganese. This steel also contains, by weight, phosphorus of 0.025 percent or less, silicon of between 0.20 and 0.50 percent, and sulfur of 0.020 percent or less. The product is manufactured by means of vacuum arc remelting, with inclusion controls for sulphide of no more than 0.04 percent and for oxide of no more than 0.05 percent. Flapper valve steel has a tensile strength of between 210 and 300 ksi, yield strength of between 170 and 270 ksi, plus or minus 8 ksi, and a hardness (Hv) of between 460 and 590. Flapper valve steel is most commonly used to produce specialty flapper valves in compressors.

Also excluded is a product referred to as suspension foil, a specialty steel product used in the manufacture of suspension assemblies for computer disk drives. Suspension foil is described as 302/304 grade or 202 grade stainless steel of a thickness between 14 and 127 microns, with a thickness tolerance of plus-or-minus 2.01 microns, and surface glossiness of 200 to 700 percent Gs. Suspension foil must be supplied in coil widths of not more than 407 mm, and with a mass of 225 kg or less. Roll marks may only be visible on one side, with no scratches of measurable depth. The material must exhibit residual stresses of 2 mm maximum deflection, and flatness of 1.6 mm over 685 mm length.

Certain stainless steel foil for automotive catalytic converters is also

excluded from the scope of the order. This stainless steel strip in coils is a specialty foil with a thickness of between 20 and 110 microns used to produce a metallic substrate with a honeycomb structure for use in automotive catalytic converters. The steel contains, by weight, carbon of no more than 0.030 percent, silicon of no more than 1.0 percent, manganese of no more than 1.0 percent, chromium of between 19 and 22 percent, aluminum of no less than 5.0 percent, phosphorus of no more than 0.045 percent, sulfur of no more than 0.03 percent, lanthanum of less than 0.002 or greater than 0.05 percent, and total rare earth elements of more than 0.06 percent, with the balance iron.

Permanent magnet iron-chromium-cobalt alloy stainless strip is also excluded from the scope of the order. This ductile stainless steel strip contains, by weight, 26 to 30 percent chromium, and 7 to 10 percent cobalt, with the remainder of iron, in widths 228.6 mm or less, and a thickness between 0.127 and 1.270 mm. It exhibits magnetic remanence between 9,000 and 12,000 gauss, and a coercivity of between 50 and 300 oersteds. This product is most commonly used in electronic sensors and is currently available under proprietary trade names such as Arnokrome III.[1]

Certain electrical resistance alloy steel is also excluded from the scope of the order. This product is defined as a non-magnetic stainless steel manufactured to American Society of Testing and Materials specification B344 and containing, by weight, 36 percent nickel, 18 percent chromium, and 46 percent iron, and is most notable for its resistance to high temperature corrosion. It has a melting point of 1,390 degrees Celsius and displays a creep rupture limit of 4 kilograms per square millimeter at 1,000 degrees Celsius. This steel is most commonly used in the production of heating ribbons for circuit breakers and industrial furnaces, and in rheostats for railway locomotives. The product is currently available under proprietary trade names such as Gilphy 36.[2]

Certain martensitic precipitation-hardenable stainless steel is also excluded from the scope of the order. This high-strength, ductile stainless steel product is designated under the Unified Numbering System as S45500-grade steel, and contains, by weight, 11 to 13 percent chromium, and 7 to 10 percent nickel. Carbon, manganese, silicon and molybdenum each comprise, by weight, 0.05 percent or less, with phosphorus and sulfur each comprising, by weight, 0.03 percent or less. This steel has copper, niobium, and titanium added to achieve aging, and will exhibit yield strengths as high as 1,700 Mpa and ultimate tensile strengths as high as 1750 Mpa after aging, with elongation percentages of 3 percent or less in 50 mm. It is generally provided in thicknesses between 0.635 and 0.787 mm, and in widths of 25.4 mm. This product is most commonly used in the manufacture of television tubes and is currently available under proprietary trade names such as Durphynox 17.[3]

Finally, three specialty stainless steels typically used in certain industrial blades and surgical and medical instruments are also excluded from the scope of the order. These include stainless steel strip in coils used in the production of textile cutting tools (*e.g.,* carpet knives).[4] This steel is similar to AISI grade 420 but containing, by weight, 0.5 to 0.7 percent of molybdenum. The steel also contains, by weight, carbon of between 1.0 and 1.1 percent, sulfur of 0.020 percent or less, and includes between 0.20 and 0.30 percent copper and between 0.20 and 0.50 percent cobalt. This steel is sold under proprietary names such as GIN4 Mo. The second excluded stainless steel strip in coils is similar to AISI 420–J2 and contains, by weight, carbon of between 0.62 and 0.70 percent, silicon of between 0.20 and 0.50 percent, manganese of between 0.45 and 0.80 percent, phosphorus of no more than 0.025 percent and sulfur of no more than 0.020 percent. This steel has a carbide density on average of 100 carbide particles per 100 square microns. An example of this product is GIN5 steel. The third specialty steel has a chemical composition similar to AISI 420 F, with carbon of between 0.37 and 0.43 percent, molybdenum of between 1.15 and 1.35 percent, but lower manganese of between 0.20 and 0.80 percent, phosphorus of no more than 0.025 percent, silicon of between 0.20 and 0.50 percent, and sulfur of no more than 0.020 percent. This product is supplied with a hardness of more than Hv 500 guaranteed after customer processing, and is supplied as, for example, GIN6.[5]

[1] Arnokrome III is a trademark of the Arnold Engineering Company.

[2] Gilphy 36 is a trademark of Imphy, S.A.

[3] Durphynox 17 is a trademark of Imphy, S.A.

[4] This list of uses is illustrated and provided for descriptive purposes only.

[5] GIN4 Mo, GIN5 and GIN6 are the proprietary grades of Hitachi Metals America, Ltd.

Period of Review

The POR is July 1, 2008, through June 30, 2009.

China Steel Corporation

As we stated in the *Preliminary Results,* our practice concerning no-shipment respondents has been to rescind the administrative review if the respondent certifies that it had no shipments within the applicable deadline and we have confirmed through our examination of data from U.S. Customs and Border Protection (CBP) that there were no shipments of subject merchandise during the POR. *See Antidumping Duties; Countervailing Duties,* 62 FR 27296, 27393 (May 19, 1997), and *Oil Country Tubular Goods from Japan: Preliminary Results of Antidumping Duty Administrative Review and Partial Rescission of Review,* 70 FR 53161, 53162 (Sept. 7, 2005), unchanged in *Oil Country Tubular Goods from Japan: Final Results and Partial Rescission of Antidumping Duty Administrative Review,* 71 FR 95 (Jan. 3, 2006). As a result, in such circumstances, we normally instructed CBP to liquidate any entries from the no-shipment company at the deposit rate in effect on the date of entry.

In our May 6, 2003, "automatic assessment" clarification, we explained that, where respondents in an administrative review demonstrate that they had no knowledge of sales through resellers to the United States, we would instruct CBP to liquidate such entries at the all-others rate applicable to the proceeding. *See Antidumping and Countervailing Duty Proceedings: Assessment of Antidumping Duties,* 68 FR 23954 (May 6, 2003).

Based on China Steel Corporation's timely assertion of no shipments and confirmation of that claim by examination of CBP data as well as through a no-shipment inquiry sent to CBP, we continue to determine that China Steel Corporation had no shipments to the United States during the POR. *See Preliminary Results,* 75 FR at 49470.

As we stated in the *Preliminary Results,* because "as entered" liquidation instructions do not alleviate the concerns which the May 2003 clarification was intended to address, we find it appropriate in this case to instruct CBP to liquidate any existing entries of merchandise produced by China Steel Corporation and exported by other parties at the all-others rate. In addition, we continue to find that it is more consistent with the May 2003 clarification not to rescind the review in

part in these circumstances but, rather, to complete the review with respect to China Steel Corporation and issue appropriate instructions to CBP based on the final results of the review. *See* the "Assessment Rates" section of this notice below.

Cost of Production

As discussed in the *Preliminary Results,* we conducted an investigation to determine whether Chia Far made home market sales of the foreign like product during the POR at prices below its cost of production (COP) within the meaning of section 773(b) of the Act. *See Preliminary Results,* 75 FR at 49472–73. As detailed in the *Preliminary Results,* we based our analysis on Chia Far's weighted-average quarterly COP. *Id.* For these final results, we have continued to apply a quarterly cost methodology and have made no changes to the cost test performed in the *Preliminary Results.*

We found that more than 20 percent of Chia Far's sales of a given product during the reporting period were at prices less than the weighted-average COP for this period. Thus, we continue to determine that these below-cost sales were made in "substantial quantities" within an extended period of time and at prices which did not permit the recovery of all costs within a reasonable period of time in the normal course of trade. *See* sections 773(b)(2)(B)–(D) of the Act.

Therefore, for purposes of these final results, we continue to find that Chia Far made below-cost sales not in the ordinary course of trade. Consequently, we disregarded the below-cost sales and used the remaining sales as the basis for determining normal value pursuant to section 773(b)(1) of the Act.

Analysis of Comments Received

The issue raised by YUSCO in its case brief, and to which we have responded, is listed in the Appendix to this notice and addressed in the Issues and Decision Memorandum (Decision Memo), which is adopted by this notice. Parties can find a complete discussion of the issue raised in this review and the corresponding recommendation in this public memorandum, which is on file in the Central Records Unit, room 7046, of the main Department building.

In addition, a complete version of the Decision Memo can be accessed directly on the Web at *http://ia.ita.doc.gov/frn/.* The paper copy and electronic version of the Decision Memo are identical in content.

Changes Since the Preliminary Results

Based on our analysis of the comments received, we have made no changes in the margin calculations for Chia Far.

Final Results of Review

We determine that the following weighted-average margin percentages exist for the period July 1, 2008, through June 30, 2009:

Manufacturer/exporter	Percent margin
Chia Far Industrial Factory Co., Ltd	0.00
Review-Specific Average Rate Applicable to the Following Companies: [6]	
Chain Chon Industrial Co., Ltd	4.30
Chien Shing Stainless Co	4.30
China Steel Corporation	*
Dah Shi Metal Industrial Co., Ltd	4.30
Goang Jau Shing Enterprise Co., Ltd	4.30
KNS Enterprise Co., Ltd	4.30
Lih Chan Steel Co., Ltd	4.30
Maytun International Corp	4.30
PFP Taiwan Co., Ltd	4.30
Shih Yuan Stainless Steel Enterprise Co., Ltd	4.30
Ta Chen Stainless Pipe Co., Ltd	4.30
Tang Eng Iron Works	4.30
Tibest International Inc	4.30
Tung Mung Development Co., Ltd./Ta Chen Stainless Pipe Co., Ltd **	4.30
Waterson Corp	4.30
Yieh Loong Enterprise Co., Ltd (aka Chung Hung Steel Co., Ltd.)	4.30
Yieh Mau Corp	4.30
Yieh Trading Corp	4.30
Yieh United Steel Corporation	4.30

* No shipments or sales subject to this review.

** This rate applies to shipments of SSSSC produced by Tung Mung Development Co., Ltd. in Taiwan and exported from Taiwan to the United States by Ta Chen Stainless Pipe Co., Ltd.

Assessment

The Department shall determine, and CBP shall assess, antidumping duties on all appropriate entries. The Department intends to issue assessment instructions to CBP 15 days after the date of publication of these final results of review.

Pursuant to 19 CFR 351.212(b)(1), we calculated importer-specific *ad valorem* duty assessment rates for Chia Far based on the ratio of the total amount of antidumping duties calculated for the examined sales to the total entered value of those sales. Pursuant to 19 CFR 351.106(c)(2), we will instruct CBP to liquidate without regard to antidumping duties any entries for which the assessment rate is *de minimis* (*i.e.,* less than 0.50 percent).

Consistent with the Department's practice, for the companies which were not selected for individual review, we will use the cash deposit rate as the assessment rate for these companies. *See, e.g., Certain Frozen Warmwater Shrimp From India: Final Results and Partial Rescission of Antidumping Duty Administrative Review,* 74 FR 33409 (July 13, 2009), and accompanying Issues and Decision Memorandum at Comment 3.

The Department clarified its "automatic assessment" regulation on May 6, 2003. *See Antidumping and Countervailing Duty Proceedings: Assessment of Antidumping Duties,* 68 FR 23954 (May 6, 2003). This clarification will apply to entries of subject merchandise during the POR produced by Chia Far for which Chia Far did not know its merchandise was destined for the United States. This clarification will also apply to POR entries of subject merchandise produced by China Steel Corporation for which we are making a final determination of no shipments, because it certified that it made no POR shipments of subject merchandise for which it had knowledge of U.S. destination. In this instance, we will instruct CBP to liquidate unreviewed entries at the all-others rate established in the less-than-fair-value (LTFV) investigation if there is no rate for the intermediate company(ies) involved in the transaction.

Cash Deposit Requirements

Further, the following deposit requirements will be effective for all shipments of SSSSC from Taiwan entered, or withdrawn from warehouse, for consumption on or after the publication date of the final results of this administrative review, as provided for by section 751(a)(2)(C) of the Act: (1) The cash deposit rate for the reviewed companies will be the rates shown above; (2) for previously investigated companies not listed above, as well as for China Steel Corporation, the cash deposit rate will continue to be the company-specific rate published for the most recent period; (3) if the exporter is not a firm covered in this review, or the LTFV investigation, but the manufacturer is, the cash deposit rate will be the rate established for the most recent period for the manufacturer of the merchandise; and (4) the cash deposit rate for all other manufacturers or exporters will continue to be 12.61 percent, the "All Others" rate made effective by the LTFV investigation.

[6] This rate is based upon the calculated rate from the most recently completed segment of this proceeding. *See Preliminary Results,* 75 FR at 49474.

See Notice of Antidumping Duty Order; Stainless Steel Sheet and Strip in Coils From United Kingdom, Taiwan, and South Korea, 64 FR 40555, 40557 (July 27, 1999). These deposit requirements, when imposed, shall remain in effect until further notice.

Notification to Importers

This notice serves as a final reminder to importers of their responsibility, under 19 CFR 351.402(f)(2), to file a certificate regarding the reimbursement of antidumping duties prior to liquidation of the relevant entries during this review period. Failure to comply with this requirement could result in the Secretary's presumption that reimbursement of antidumping duties occurred and the subsequent assessment of double antidumping duties.

Notification to Interested Parties

This notice serves as the only reminder to parties subject to administrative protective order (APO) of their responsibility concerning the disposition of proprietary information disclosed under APO in accordance with 19 CFR 351.305(a)(3). Timely written notification of return/destruction of APO materials or conversion to judicial protective order is hereby requested. Failure to comply with the regulations and the terms of an APO is a sanctionable violation.

We are issuing and publishing these final results of review in accordance with sections 751(a)(1) and 777(i)(1) of the Act.

Dated: December 3, 2010.

Paul Piquado,

Acting Deputy Assistant Secretary for Import Administration.

Appendix—Issue in the Decision Memorandum

1. Whether the Department Should Rescind the Review with Respect to YUSCO.

[FR Doc. 2010–30986 Filed 12–8–10; 8:45 am]

BILLING CODE 3510–DS–P

DEPARTMENT OF COMMERCE

National Oceanic and Atmospheric Administration

RIN 0648–XA078

Marine Mammals; File No. 15750

AGENCY: National Marine Fisheries Service (NMFS), National Oceanic and Atmospheric Administration (NOAA), Commerce.

ACTION: Notice; receipt of application.

SUMMARY: Notice is hereby given that ABR, Inc. Environmental Research and Services, Fairbanks, AK, has applied in due form for a permit to conduct research on marine mammals.

DATES: Written, telefaxed, or e-mail comments must be received on or before January 10, 2011.

ADDRESSES: The application and related documents are available for review by selecting "Records Open for Public Comment" from the *Features* box on the Applications and Permits for Protected Species (APPS) home page, *https://apps.nmfs.noaa.gov,* and then selecting File No. 15750 from the list of available applications.

These documents are also available upon written request or by appointment in the following office(s):

Permits, Conservation and Education Division, Office of Protected Resources, NMFS, 1315 East-West Highway, Room 13705, Silver Spring, MD 20910; phone (301) 713–2289; fax (301) 713–0376; and

Alaska Region, NMFS, P.O. Box 21668, Juneau, AK 99802–1668; phone (907) 586–7221; fax (907) 586–7249.

Written comments on this application should be submitted to the Chief, Permits, Conservation and Education Division, at the address listed above. Comments may also be submitted by facsimile to (301) 713–0376, or by e-mail to *NMFS.Pr1Comments@noaa.gov.* Please include the File No. in the subject line of the email comment.

Those individuals requesting a public hearing should submit a written request to the Chief, Permits, Conservation and Education Division at the address listed above. The request should set forth the specific reasons why a hearing on this application would be appropriate.

FOR FURTHER INFORMATION CONTACT: Tammy Adams or Laura Morse, (301) 713–2289.

SUPPLEMENTARY INFORMATION: The subject permit is requested under the authority of the Marine Mammal Protection Act of 1972, as amended (MMPA; 16 U.S.C. 1361 *et seq.*), the regulations governing the taking and importing of marine mammals (50 CFR part 216), the Endangered Species Act of 1973, as amended (ESA; 16 U.S.C. 1531 *et seq.*), and the regulations governing the taking, importing, and exporting of endangered and threatened species (50 CFR 222–226).

The applicant requests a five-year permit to conduct aerial surveys in Iniskin, Illiamna, Chinitna, and Kamishak Bays to document seasonal distribution and abundance of marine mammals in western lower Cook Inlet, Alaska. The applicant requests permission for level B harassment of the following marine mammals annually: 1,000 Steller sea lions (*Eumetopias jubatus*), 250 beluga whales (*Delphinapterus leucas*), 34,400 harbor seals (*Phoca vitulina*), 600 harbor porpoises (*Phocoena phocoena*), 150 Dall's porpoises (*Phocoenoides dalli*), 100 minke whales (*Balaenoptera acutorostrata*), 50 gray whales (*Eschrichtius robustus*), 100 killer whales (*Orcinus orca*), 15 northern fur seals (*Callorhinus ursinus*), 30 fin whales (*B. physalus*), and 125 humpback whales (*Megaptera novaeangliae*).

In compliance with the National Environmental Policy Act of 1969 (42 U.S.C. 4321 *et seq.*), an initial determination has been made that the activity proposed is categorically excluded from the requirement to prepare an environmental assessment or environmental impact statement.

Concurrent with the publication of this notice in the **Federal Register**, NMFS is forwarding copies of the application to the Marine Mammal Commission and its Committee of Scientific Advisors.

Dated: December 3, 2010.

Tammy C. Adams,

Acting Chief, Permits, Conservation and Education Division, Office of Protected Resources, National Marine Fisheries Service.

[FR Doc. 2010–30983 Filed 12–8–10; 8:45 am]

BILLING CODE 3510–22–P

DEPARTMENT OF COMMERCE

National Oceanic and Atmospheric Administration

RIN 0648–XA080

New England Fishery Management Council; Public Hearings

AGENCY: National Marine Fisheries Service (NMFS), National Oceanic and Atmospheric Administration (NOAA), Commerce.

ACTION: Monkfish Fishery Management Plan Amendment 6; Scoping Hearings; Request for Comments.

SUMMARY: The New England Fishery Management Council (NEFMC) will hold public hearings to solicit comments on proposals to be included in the Draft Amendment 6 to the Monkfish Fishery Management Plan (FMP). The purpose of Amendment 6 is to consider one or more catch share management approaches for the monkfish fishery, including, but not limited to, Individual Fishery Quotas (IFQs), sectors and/or community quotas. The NEFMC is initiating a public process to determine the scope of

issues and range of alternatives to be addressed in Amendment 6 and its environmental impact statement (EIS).

DATES: Written comments must be received on or before 5 p.m. EST, February 15, 2011. The public hearings will be held from January 4, 2011 to February 9, 2011. For specific dates and times, *see* **SUPPLEMENTARY INFORMATION.**

ADDRESSES: The Council will take comments at public meetings in Gloucester, MA; Hyannis, MA; New Bedford, MA; Warwick, RI; Portland, ME; Riverhead, NY; Manahawkin, NJ; Ocean City, MD, and New Bern, NC. For specific locations, *see* **SUPPLEMENTARY INFORMATION.** Written comments should be sent to Patricia Kurkul, Regional Administrator, National Marine Fisheries Service, 55 Great Republic Drive, Gloucester, MA 01930. Comments may also be sent via fax to (978) 281–9135 or submitted via e-mail to *monkfisha6@noaa.gov* with Scoping Comments on Monkfish Amendment 6 in the subject line. Requests for copies of the scoping document and other information should be directed to Paul J. Howard, Executive Director, New England Fishery Management Council, 50 Water Street, Mill 2, Newburyport, MA 01950; *telephone:* (978) 465–0492.

FOR FURTHER INFORMATION CONTACT: Paul J. Howard, Executive Director, New England Fishery Management Council; telephone: (978) 465–0492.

SUPPLEMENTARY INFORMATION: The U.S. monkfish fishery is jointly managed by the NEFMC and the Mid-Atlantic Fishery Management Council (MAFMC), with the NEFMC having the administrative lead. On November 30, 2010, the NEFMC, in coordination with NMFS, published a Notice of Intent (NOI) to prepare an EIS for Amendment 6 to the Monkfish FMP (75 FR 74005). At that time only one hearing was scheduled to be held on December 15, 2010 at 4:30 p.m. in conjunction with the MAFMC meeting in Virginia Beach, VA. The purpose of this notification is to alert the interested public of additional public scoping hearings that were scheduled following the publication of the NOI for Amendment 6. The following schedule provides the information for these public hearings.

The dates, times, locations and telephone numbers of the hearings are as follows:

Tuesday, January 4, 2011 at 3 p.m.—Annisquam River Marine Fisheries Station, 30 Emerson Avenue, Gloucester, MA 01930; *telephone:* (978) 282–0308;

Monday, January 10, 2011 at 3 p.m.—Holiday Inn, 1127 Route 132, Hyannis, MA 02601; *telephone:* (508) 775–1153;

Tuesday, January 11, 2011 at 9 a.m.—Fairfield Inn & Suites, 185 MacArthur Drive, New Bedford, MA 02740; *telephone:* (774) 634–2000;

Tuesday, January 11, 2011 at 4 p.m.—Hilton Garden Inn, One Thurber Street, Warwick, RI 02886; *telephone:* (401) 734–9600;

Wednesday, January 19, 2011 at 1 p.m.—Clarion Hotel, 1230 Congress Street, Portland, ME 04101; *telephone:* (207) 774–5611;

Monday, January 31, 2011 at 1 p.m.—Holiday Inn Express East End, 1707 Old Country Road, Riverhead, NY 11901; *telephone:* (631) 548–1000;

Tuesday, February 1, 2011 at 9 a.m.—Holiday Inn, 151 Route 72 East, Manahawkin, NJ 08050; *telephone:* (609) 481–6100;

Wednesday, February 2, 2011 at 9 a.m.—Clarion Fontaineblue Hotel, 101st Street on the Ocean, Ocean City, MD 21842; *telephone:* (800) 638–2100;

Wednesday, February 9, 2011 at 4:30 p.m.—Hilton Riverfront Hotel, 100 Middle Street, New Bern, NC 28560; *telephone:* (252) 638–3585.

Special Accommodations

These hearings are physically accessible to people with physical disabilities. Requests for sign language interpretation or other auxiliary aids should be directed to Paul J. Howard (*see* **ADDRESSES**) at least 5 days prior to the meeting date.

Authority: 16 U.S.C. 1801 *et seq.*

Dated: December 6, 2010.

Tracey L. Thompson,

Acting Director, Office of Sustainable Fisheries, National Marine Fisheries Service.

[FR Doc. 2010–30950 Filed 12–8–10; 8:45 am]

BILLING CODE 3510–22–P

DEPARTMENT OF COMMERCE

National Oceanic and Atmospheric Administration

RIN 0648–XA077

Endangered Species; File Nos. 13307, 13544, and 14586

AGENCY: National Marine Fisheries Service (NMFS), National Oceanic and Atmospheric Administration (NOAA), Commerce.

ACTION: Issuance of permit and permit modifications.

SUMMARY: Notice is hereby given that NMFS has issued a permit and two permit modifications to take sea turtles and marine mammals for purposes of scientific research.

ADDRESSES: The permit and related documents are available for review upon written request or by appointment in the following offices:

Permits, Conservation and Education Division, Office of Protected Resources, NMFS, 1315 East-West Highway, Room 13705, Silver Spring, MD 20910; phone (301) 713–2289; fax (301) 713–0376; and Southeast Region, NMFS, 263 13th Ave South, St. Petersburg, FL 33701; phone (727) 824–5312; fax (727) 824–5309.

FOR FURTHER INFORMATION CONTACT: Amy Hapeman or Amy Sloan, (301) 713–2289.

SUPPLEMENTARY INFORMATION: On March 3, 2010, notice was published in the **Federal Register** (75 FR 9580) that a request for a scientific research permit to take sea turtles and marine mammals had been submitted by Jeanette Wyneken, Florida Atlantic University, Boca Raton, FL (File No. 14586). On March 3, 2010, notice was published in the **Federal Register** (75 FR 9580) that a modification of Permit No. 13544, issued April 17, 2009 (74 FR 18354), had been requested by Jeffrey Schmid, PhD, Conservancy of Southwest Florida, Naples, FL, for sea turtle research. On April 1, 2010, notice was published in the **Federal Register** (75 FR 16428) that a modification of Permit No. 13307–01, issued July 11, 2008 (73 FR 39950), had been requested by Kristen Hart, PhD, USGS, Davie, L, for sea turtle research. The requested permit and permit modifications have been issued under the authority of the Endangered Species Act of 1973, as amended (ESA; 16 U.S.C. 1531 *et seq.*), the regulations governing the taking, importing, and exporting of endangered and threatened species (50 CFR parts 222–226); and, for Permit No. 14586, the Marine Mammal Protection Act of 1972, as amended (16 U.S.C. 1361 *et seq.*) and the regulations governing the taking and importing of marine mammals (50 CFR part 216).

Permit No. 14586 authorizes the permit holder to annually collect baseline data regarding the abundance and distribution of cetaceans [numerous non-listed species and endangered fin (*Balaenoptera physalus*), sperm (*Physeter macrocephalus*), humpback (*Megaptera novaengliae*), and North Atlantic right (*Eubalaena glacialis*) whales] and sea turtles [leatherback (*Dermochelys coriacea*), loggerhead (*Caretta caretta*), green (*Chelonia mydas*), hawksbill (*Eretmochelys imbricata*), and Kemp's ridley (*Lepidochelys kempii*)] in the Straits of Florida off Florida's southeast coast. Research is authorized to occur before, during, and after ocean energy technology testing via vessel and aerial surveys. The permit expires on November 30, 2015.

Permit No. 13544 authorizes the permit holder to characterize the aggregations of Kemp's ridley, loggerhead, green, and hawksbill sea turtles in the nearshore waters of Lee County in southwest Florida by annually performing capture, weighing, passive integrated transponder (PIT) tagging, biopsy sampling; and for subsets of animals, fecal sampling and external tagging). The modified permit authorizes researchers to additionally satellite tag a subset of Kemp's ridley and loggerhead sea turtles to determine their seasonal distribution and possible migrations in the southeastern Gulf of Mexico. The permit modification is valid until the permit expires on April 30, 2014.

Permit No. 13307–01 authorizes the permit holder to addresses fine-scale temporal and spatial patterns of sea turtle habitat use, ecology, and genetic origin within the Dry Tortugas National Park by annually capturing, weighing, flipper tagging, PIT tagging, and sampling (blood, tissue, feces, and lavage) green, hawksbill, and loggerhead sea turtles, a subset of which may be externally tagged with satellite and acoustic transmitters. The permit modification increases the number of green sea turtles that may be captured to 80 per year due to the high rate of recent capture success. The modification is valid until the permit expires on June 30, 2013.

Issuance of these permits, as required by the ESA, was based on a finding that such permits (1) Were applied for in good faith, (2) will not operate to the disadvantage of such endangered or threatened species, and (3) are consistent with the purposes and policies set forth in section 2 of the ESA.

Dated: December 3, 2010.

P. Michael Payne,

Chief, Permits, Conservation and Education Division, Office of Protected Resources, National Marine Fisheries Service.

[FR Doc. 2010–31005 Filed 12–8–10; 8:45 am]

BILLING CODE 3510–22–P

COMMODITY FUTURES TRADING COMMISSION

Agency Information Collection Activities Under OMB Review

AGENCY: Commodity Futures Trading Commission.

ACTION: Notice.

SUMMARY: In compliance with the Paperwork Reduction Act (44 U.S.C. 3501 *et seq.*), this notice announces that the Information Collection Request (ICR) abstracted below has been forwarded to the Office of Management and Budget (OMB) for review and comment. The ICR describes the nature of the information collection and its expected costs and burden.

DATES: Comments must be submitted on or before January 10, 2011.

FOR FURTHER INFORMATION CONTACT: Christopher W. Cummings, Division of Clearing and Intermediary Oversight, CFTC, (202) 418–5445; *Fax:* (202) 418–5528; *e-mail: ccummings@cftc.gov* and refer to OMB Control No. 3038–0049.

SUPPLEMENTARY INFORMATION:

Title: Procedural Requirements for Requests for Interpretative, No-Action, and Exemptive Letters (OMB Control No. 3038–0049). This is a request for extension of a currently approved information collection.

Abstract: Commission Regulation 140.99 requires persons submitting requests for exemptive, no-action, and interpretative letters to provide specific written information, certified as to completeness and accuracy, and to update that information to reflect material changes. Regulation 140.99 was promulgated pursuant to the Commission's rulemaking authority contained in Section 8a(5) of the Commodity Exchange Act, 7 U.S.C. 12a(5) (2000). Regulation 41.3 requires securities brokers and dealers submitting requests for exemptive orders to provide specified written information in support of such requests. Regulation 41.3 was promulgated in response to the requirement in the Commodity Futures Modernization Act of 2000 that the Commission establish procedures for requesting such orders.

An agency may not conduct or sponsor, and a person is not required to respond to, a collection of information unless it displays a currently valid OMB control number. The OMB control numbers for the CFTC's regulations were published on December 30, 1981. *See* 46 FR 63035 (Dec. 30, 1981). The **Federal Register** notice with a 60-day comment period soliciting comments on this collection of information was published on September 29, 2010 (75 FR 60087).

Burden statement: The respondent burden for this collection is estimated to average 7 hours per response. These estimates include the time needed to review instructions; develop, acquire, install, and utilize technology and systems for the purposes of collecting, validating, and verifying information, processing and maintaining information and disclosing and providing information; adjust the existing ways to comply with any previously applicable instructions and requirements; train personnel to be able to respond to a collection of information; and transmit or otherwise disclose the information.

Respondents/Affected Entities: Futures Commission Merchants, Introducing Brokers, Commodity Pool Operators, Commodity Trading Advisors, Associated Persons, Floor Brokers, Floor Traders, Securities Brokers and Dealers, Retail Foreign Exchange Dealers.

Estimated number of respondents: 100.

Estimated total annual burden on respondents: 1,050 hours.

Frequency of collection: On occasion.

Send comments regarding the burden estimated or any other aspect of the information collection, including suggestions for reducing the burden, to the addresses listed below. Please refer to OMB Control No. 3038–0049 in any correspondence.

Christopher W. Cummings, Division of Clearing and Intermediary Oversight, U.S. Commodity Futures Trading Commission, 1155 21st Street, NW., Washington, DC 20581 and Office of Information and Regulatory Affairs, Office of Management and Budget.

Attention: Desk Officer for CFTC, 725 17th Street, Washington, DC 20503.

Dated: December 2, 2010.

David Stawick,

Secretary of the Commission.

[FR Doc. 2010–30887 Filed 12–8–10; 8:45 am]

BILLING CODE P

COMMODITY FUTURES TRADING COMMISSION

SECURITIES AND EXCHANGE COMMISSION

[Release No. 34–63435; File No. 4–621]

Joint Public Roundtable on Issues Related to Capital and Margin Requirements for Swaps and Security-Based Swaps

AGENCIES: Commodity Futures Trading Commission ("CFTC") and Securities and Exchange Commission ("SEC") (each, an "Agency," and collectively, the "Agencies").

ACTION: Notice of roundtable discussion; request for comment.

SUMMARY: On Friday, December 10, 2010, commencing at 1 p.m. and ending at 5 p.m., staff of the Agencies will hold a public roundtable meeting at which invited participants will discuss provisions of the Dodd-Frank Wall Street Reform and Consumer Protection Act (the "Act") that require the Agencies

to adopt rules for the capital and margin requirements applicable to swaps and security-based swaps of swap dealers, major swap participants, security-based swap dealers, and security-based swap participants. The discussion will be open to the public with seating on a first-come, first-served basis. Members of the public may also listen to the meeting by telephone. Call-in participants should be prepared to provide their first name, last name and affiliation. The information for the conference call is set forth below.

- *U.S. Toll-Free:* 877–951–7311
- *International Toll:* 1–203–607–0666
- *Conference ID:* 8978249

A transcript of the public roundtable discussion will be published at *http://www.cftc.gov/LawRegulation/DoddFrankAct/OTC_5_CapMargin.html.* The roundtable discussion will take place in Lobby Level Hearing Room (Room 1000) at the CFTC's headquarters at Three Lafayette Centre, 1155 21st Street, NW., Washington, DC.

FOR FURTHER INFORMATION CONTACT: The CFTC's Office of Public Affairs at (202) 418–5080 or the SEC's Office of Public Affairs at (202) 551–4120.

SUPPLEMENTARY INFORMATION: The roundtable discussion will take place on Friday, December 10, 2010, commencing at 1 p.m. and ending at 5 p.m. Members of the public who wish to comment on the topics addressed at the discussion, or on any other topics related to capital and margin requirements for swaps and security-based swaps in the context of the Act, may do so via:

- Paper submission to David Stawick, Secretary, Commodity Futures Trading Commission, Three Lafayette Centre, 1155 21st Street, NW., Washington, DC 20581, or Elizabeth M. Murphy, Secretary, Securities and Exchange Commission, 100 F Street, NE., Washington, DC 20549–1090; or
- Electronic submission to *CapitalandMargin@CFTC.gov* (all e-mails must reference "Dodd Frank Roundtable Capital and Margin Requirements" in the subject field); and/or by e-mail to *rule-comments@sec.gov* or through the comment form available at: *http://www.sec.gov/rules/other.shtml.*

All submissions will be reviewed jointly by the Agencies. All comments must be in English or be accompanied by an English translation. All submissions provided to either Agency in any electronic form or on paper will be published on the Web site of the respective Agency, without review and without removal of personally identifying information. Please submit only information that you wish to make publicly available.

By the Securities and Exchange Commission.

Dated: December 6, 2010.

Elizabeth M. Murphy,

Secretary.

By the Commodity Futures Trading Commission.

Dated: December 6, 2010.

David A. Stawick,

Secretary.

[FR Doc. 2010–31003 Filed 12–8–10; 8:45 am]

BILLING CODE 6351–01–P; 8011–01–P

COMMODITY FUTURES TRADING COMMISSION

SECURITIES AND EXCHANGE COMMISSION

[Release No. 34–63423; File No. 4–620]

Acceptance of Public Submissions on a Study Mandated by the Dodd-Frank Wall Street Reform and Consumer Protection Act, Section 719(b)

AGENCY: Commodity Futures Trading Commission; Securities and Exchange Commission.

ACTION: Request for Comments.

SUMMARY: The Dodd-Frank Wall Street Reform and Consumer Protection Act ("Dodd-Frank Act") was enacted on July 21, 2010. The Dodd-Frank Act, among other things, mandates that the Commodity Futures Trading Commission ("CFTC") and the Securities and Exchange Commission ("SEC") conduct a study on "the feasibility of requiring the derivatives industry to adopt standardized computer-readable algorithmic descriptions which may be used to describe complex and standardized financial derivatives." These algorithmic descriptions should be designed to "facilitate computerized analysis of individual derivative contracts and to calculate net exposures to complex derivatives." The study also must consider the extent to which the algorithmic description, "together with standardized and extensible legal definitions, may serve as the binding legal definition of derivative contracts." In connection with this study, the staff of the CFTC and SEC seek responses of interested parties to the questions set forth below.

DATES: The CFTC will accept submissions on behalf of both agencies in response to the questions through December 31, 2010.

ADDRESSES: You may submit responses to the CFTC, identified in the subject line with "algorithmic study" by any of the following methods:

- *CFTC Agency Web site: http://www.cftc.gov,* via its Comments Online process at *http://comments.cftc.gov.* Follow the instructions for submitting comments through the Web site.
- *Mail:* David A. Stawick, Secretary of the Commission, Commodity Futures Trading Commission, Three Lafayette Centre, 1155 21st Street, NW., Washington, DC 20581.
- *Hand Delivery/Courier:* Same as mail above.

Please submit your comments using only one method.

All comments must be submitted in English, or if not, accompanied by an English translation. Comments will be posted as received to *http://www.cftc.gov* and *http://www.sec.gov.* You should submit only information that you wish to make available publicly. If you wish the CFTC to consider information that you believe is exempt from disclosure under the Freedom of Information Act, a petition for confidential treatment of the exempt information may be submitted according to the procedures established in CFTC Regulation 145.9, 17 CFR 145.9.

The CFTC and the SEC reserve the right, but shall have no obligation, to review, pre-screen, filter, redact, refuse or remove any or all of your submission from *http://www.cftc.gov* and *http://www.sec.gov* that they may deem to be inappropriate for publication, such as obscene language. All submissions that have been redacted or removed that contain comments may be accessible under the Freedom of Information Act.

FOR FURTHER INFORMATION CONTACT: Nancy R. Doyle, Office of the General Counsel, Commodity Futures Trading Commission, Three Lafayette Centre, 1155 21st Street, NW., Washington, DC 20581, *telephone:* (202) 418–5136, or Matthew P. Reed, Division of Risk, Strategy, and Financial Innovation, Securities and Exchange Commission, 100 F Street, NE., Washington, DC 20549-[mail stop], telephone (202) 551–2607.

SUPPLEMENTARY INFORMATION: On July 21, 2010, The Dodd-Frank Wall Street Reform and Consumer Protection Act ("Dodd-Frank Act"), Public Law 111–203, was enacted.

Pursuant to Title VII, Sec. 719(b) of Dodd-Frank, the Commodity Futures Trading Commission with the Securities and Exchange Commission, jointly, must report to Congress by March of 2011 on "the feasibility of requiring the derivatives industry to adopt standardized computer-readable algorithmic descriptions which may be

used to describe complex and standardized financial derivatives." These algorithmic descriptions should be designed to "facilitate computerized analysis of individual derivative contracts and to calculate net exposures to complex derivatives." The study also must consider whether a combination of these algorithmic descriptions and "standardized and extensible legal definitions[ ] may serve as the binding legal definition of derivative contracts."

A copy of the text of the statute calling for this study may be found here: *http://www.dodd-frank-act.us/Dodd_Frank_Act_Text_Section_719.html.*

In furtherance of this report, we seek responses to the following questions. Please note that responses may be made public, and may be cited in this report. Questions relate to the current use of standardized computer-readable descriptions for both data storage and messaging, and to the usefulness and cost of any transition to a universal standard for messaging and data storage. Responders are encouraged to provide any additional relevant information beyond that called for by these questions.

Calculation of "Net Exposures to Complex Derivatives" and other "Computerized Analysis":

1. How would your organization or community define "net exposures to complex derivatives?"

2. Do you calculate net exposures to complex derivatives?

3. What data do you require to calculate net exposures to complex derivatives? Does it depend on the derivatives instrument type? How?

4. Are there any difficulties associated with your ability to gather the data needed to calculate net exposures to complex derivatives? What are they?

5. What other analyses do you currently perform on derivatives agreements? What kinds of analyses would you like to perform, and how could regulators and standards setters make those analyses possible?

6. How often do you perform net exposure calculations at the level of your organization? Is it continuous and real time, only for periodic external reporting, or some frequency in between?

Current practices concerning standardized computer descriptions of derivatives:

7. Do you rely on a discrete set of computer-readable descriptions ("ontologies") to define and describe derivatives transactions and positions? If yes, what computer language do you use?

8. If you use one or more ontologies to define derivatives transactions and positions, are they proprietary or open to the public? Are they used by your counterparties and others in the derivatives industry?

9. How do you maintain and extend the ontologies that you use to define derivatives data to cover new financial derivative products? How frequently are new terms, concepts and definitions added?

10. What is the scope and variety of derivatives and their positions covered by the ontologies that you use? What do they describe well, and what are their limitations?

11. How do you think any limitations to the ontologies you use to describe derivatives can be overcome?

12. Are these ontologies able to describe derivatives transactions in sufficient detail to enable you to calculate net exposures to complex derivatives?

13. Are these ontologies able to describe derivatives transactions in sufficient detail to enable you to perform other analysis? What types of analysis can you conduct with this data, and what additional data must be captured to perform this analysis?

14. Which identifier regimes, if any, do you use to identify counterparties, financial instruments, and other entities as part of derivatives contract analysis?

Current use of standardized computer readable descriptions for messaging of derivatives transactions:

15. Which computer language or message standard do you currently use to create and communicate your messages for derivatives transactions?

16. Is there a difference between the created message and the communicated message? For example, does your internally archived version of the message contain proprietary fields or data that are removed when it is communicated to counterparties or clearing houses?

17. Are different messaging standards used to describe different contracts, counterparties, and transactions?

18. How and where are the messages stored, and do the messages capture different information from that information stored in internal systems?

19. What information is currently communicated, by and to whom, and for what purposes?

20. For lifecycle event messages (*e.g.,* credit events, changes of party names or identifiers), are there extant messaging standards that can update data relating to derivatives contracts that are stored in data repositories?

21. What other standards (*i.e.,* FpML, FIX, *etc.*) related to derivatives transactions does your organization or community use, and for what purposes? Has your implementation of these standards had any effect on the way your business is conducted (*e.g.,* does it reduce misunderstanding of contract terms, has it increased the frequency or ease of trades).

22. Is the data represented by this/these messaging standard(s) complete enough to calculate net exposures to complex derivatives? What additional information would need to be represented?

23. In general, to what extent are XML-based languages able to describe a derivatives contract for further analysis? To what extent is other technology needed to provide a full description?

24. What other analysis can be conducted with this data? What additional information should be captured?

25. Do you have plans to change your messaging schemes/formats in the near future?

26. Are there identifier regimes widely used in the derivatives market for identifying counterparties, financial instruments, and other entities in messaging?

The need for standardized computer descriptions of derivatives:

27. Would there be a benefit to standardizing computer readable descriptions of financial derivatives? What about standardization for a certain class/type of financial derivatives (*i.e.,* CDS versus interest rate, or plain vanilla versus complex)?

28. What would be the issues, costs and concerns associated with standardizing computer readable descriptions of financial derivatives? Are there existing standards that could or should be expanded (*i.e.,* FpML, FIX, *etc.*)? Do the existing standards in this area have materially different costs or issues?

29. What would be an ideal ontology for you in terms of design, implementation, and maintenance of the data sets and applications needed for your business?

30. How would a standardized computer readable description of financial derivatives be developed and maintained (*i.e.,* a government-sponsored initiative, a public-private partnership, standard-setting by a collaborative process, *etc.*)? Are there current models that should be considered?

31. What is the importance of ontologies for the representation of derivatives data now and in the future?

Implementation:

32. Have you ever implemented a transition to a new data ontology, data messaging standard, or internal data standard?

33. If yes, how did the perceived and actual benefits compare to estimated and actual costs over the short- and long-run?

34. What were the main difficulties that you experienced during a transition/implementation of new data standards? What could the organization developing and maintaining the standards do (or avoid) to help alleviate these difficulties?

35. Would it be useful to use a standardized, computer readable description for financial derivatives instruments? How would it be useful? Would such a standard be useful for communicating transactions, storing position information, both, or other purposes? What would be the costs involved?

36. How should regulators and standard setters implement description standards in the derivatives market?

Making computer descriptions legally binding:

37. Are there currently aspects of financial derivatives messaged in a computer readable format that have a legally-binding effect?

38. What information, if any, is not captured that would be required to make the computer descriptions themselves, without reference to other materials, legally binding?

39. What information would need to be captured for a legally binding contract that would not need to be captured for analyzing the contract? Is there a substantial cost differential between the processes needed to capture one set of information versus another?

40. Would there be a benefit to making the computer readable descriptions of financial derivatives legally binding? Would there be drawbacks? What are they?

Other:

41. Is there other information not called for by these questions that we should consider?

Dated: December 2, 2010.

By the CFTC.

David Stawick,

Secretary of the Commission.

By the Commission (SEC).

Elizabeth M. Murphy,

Secretary.

[FR Doc. 2010–30905 Filed 12–8–10; 8:45 am]

BILLING CODE 6351–01–8011–01–P

CONSUMER PRODUCT SAFETY COMMISSION

[CPSC Docket No. CPSC–2010–0115]

Extension of the Date by Which Youth All-Terrain Vehicles Must Be Tested and Certified

AGENCY: Consumer Product Safety Commission.

ACTION: Notice of extension of date of testing and certification of youth all-terrain vehicles.

SUMMARY: The U.S. Consumer Product Safety Commission ("CPSC" or "Commission") is announcing that the Commission has extended, by 60 days, the date by which manufacturers (including importers) of youth all-terrain vehicles (ATVs) must submit sufficient samples of such products to a third party conformity assessment body approved by the Commission for testing and, based on such testing, issue a certificate that the products manufactured after the deadline comply with certain CPSC regulations relating to ATVs. The extension is granted because there are an insufficient number of third party conformity assessment bodies accredited by the Commission to permit testing and certification under the original schedule.[1]

DATES: The date after which youth ATVs must be tested by third party conformity assessment bodies accredited by the Commission to assess conformity with the CPSC regulations for all-terrain vehicles is extended until January 25, 2011.

Comments in response to this notice should be submitted by December 30, 2010. Comments on this notice should be captioned "Third Party Testing and Certification of Youth All-Terrain Vehicles: Request for Stay of Enforcement and Other Relief."

ADDRESSES: You may submit comments, identified by Docket No. CPSC–2010–0115, by any of the following methods:

Electronic Submissions: Submit electronic comments in the following way:

Federal eRulemaking Portal: http://www.regulations.gov. Follow the instructions for submitting comments. To ensure timely processing of comments, the Commission is no longer accepting comments submitted by electronic mail (e-mail) except through: *http://www.regulations.gov*.

Written Submissions: Submit written submissions in the following way:

Mail/Hand delivery/Courier (for paper, disk, or CD–ROM submissions), preferably in five copies, to: Office of the Secretary, U.S. Consumer Product Safety Commission, Room 820, 4330 East West Highway, Bethesda, MD 20814; telephone (301) 504–7923.

Instructions: All submissions received must include the agency name and docket number for this notice. All comments received may be posted without change to: *http://www.regulations.gov*, including any personal information provided. Do not submit confidential business information, trade secret information, or other sensitive or protected information (such as a Social Security Number) electronically; if furnished at all, such information should be submitted in writing.

Docket: For access to the docket to read background documents or comments received, go to: *http://www.regulations.gov*.

FOR FURTHER INFORMATION CONTACT: Richard McCallion, Program Area Team Leader, Office of Hazard Identification and Reduction, U.S. Consumer Product Safety Commission,10901 Darnestown Road, Gaithersburg, MD 20878; e-mail: *rmccallion@cpsc.gov*.

SUPPLEMENTARY INFORMATION:

I. Introduction

Section 14(a)(3)(B)(vi) of the CPSA, as added by section 102(a)(2) of the Consumer Product Safety Improvement Act of 2008 ("CPSIA"), Public Law 110–314, directs the CPSC to establish and publish a notice of requirements for accreditation of third party conformity assessment bodies to assess children's products for conformity with "other children's product safety rules." Section 14(f)(1) of the CPSA defines "children's product safety rule" as "a consumer product safety rule under [the CPSA] or similar rule, regulation, standard, or ban under any other Act enforced by the Commission, including a rule declaring a consumer product to be a banned hazardous product or substance." Under section 14(a)(3)(A) of the CPSA, 15 U.S.C. 2063(a)(3)(A), each manufacturer (including an importer) or private labeler of products subject to those regulations must have products that are manufactured more than 90 days after the establishment and **Federal Register** publication of a notice of the requirements for accreditation tested by a third party conformity assessment body accredited to do so, and must issue a certificate of compliance with the applicable regulations based on that

[1] The Commission voted 3–1–1 to approve this notice. Chairman Inez Tennenbaum, Commissioner Thomas Moore, and Commissioner Robert Adler approved the notice. Commissioner Nancy Nord voted to approve a different version of the notice. Commissioner Anne Northup abstained.

testing. Pursuant to section 14(a)(3)(F) of the CPSA, the Commission may extend the 90-day period by not more than 60 days if the Commission determines that an insufficient number of third party conformity assessment bodies have been accredited to permit certification for a children's product safety rule. Irrespective of certification, the product in question must comply with applicable CPSC requirements (*see, e.g.,* section 14(h) of the CPSA, as added by section 102(b) of the CPSIA).

In the **Federal Register** of August 27, 2010 (75 FR 52616) (accessible at *http://www.cpsc.gov/businfo/frnotices/fr10/atv.pdf*), the Commission published a notice of requirements that provided the criteria and process for Commission acceptance of accreditation of third party conformity assessment bodies for testing of ATVs designed or intended primarily for children 12 years of age or younger pursuant to 16 CFR part 1420, the CPSC regulations under the CPSA relating to ATVs. The notice of requirements stated that, for youth ATVs manufactured after November 26, 2010, the manufacturer "must issue a certificate of compliance with 16 CFR part 1420 based on" testing performed by a third party conformity assessment body (75 FR at 52618). The notice also asked for comments on the notice to be received by September 27, 2010.

The notice of requirements also stated that the Commission will accept a certificate of compliance with 16 CFR part 1420, *Requirements for All Terrain Vehicles,* based on testing performed by an accredited third party conformity assessment body (including a government-owned or government-controlled conformity assessment body, or a firewalled conformity assessment body) prior to the Commission's acceptance of its accreditation, if all the following conditions are met:

- When the product was tested, the testing was done by a third party conformity assessment body, which at that time, was ISO/IEC 17025 accredited by an International Laboratory Accreditation Cooperation-Mutual Recognition Arrangement ("ILAC/MRA") signatory. For firewalled conformity assessment bodies, the Commission will not accept a certificate of compliance based upon testing performed by the third party conformity assessment body, unless the firewalled conformity assessment body was accredited, by order, as a firewalled conformity assessment body before the product was tested, even though the order would not have included the test methods in 16 CFR part 1420.
- The third party conformity assessment body's application for testing using the test methods in 16 CFR part 1420 is accepted by the CPSC on or before October 26, 2010.
- The product was tested on or after November 4, 2008 (the date that 16 CFR part 1420 was published).
- The accreditation scope in effect for the third party conformity assessment body at the time of testing expressly included testing to 16 CFR part 1420.
- The test results show compliance with the applicable current standards and/or regulations.
- The third party conformity assessment body's accreditation, including 16 CFR part 1420 in its scope, remains in effect through the effective date for mandatory third party testing and manufacturer certification for conformity with 16 CFR part 1420.

75 FR at 52619. Obviously, the date specified in that notice for acceptance of such "retrospective" testing, October 26, 2010, has passed.

II. Requests for Extension

In response to the notice of requirements, the Specialty Vehicle Institute of America ("SVIA") filed a comment that included a request that the Commission extend by 60 days the date by which manufacturers must begin testing and certification of youth ATVs. Among the reasons given for the extension were the complexity of 16 CFR part 1420 and that no third party conformity assessment bodies have been accredited by an accrediting body that is a signatory to the ILAC/MRA, a prerequisite for such conformity assessment bodies to be accepted by the CPSC.

On November 17, 2010, the SVIA filed a "Petition for Extension and Stay of Enforcement for Third Party Testing for Certain All-Terrain Vehicles." The petition requested a 60-day extension of the date by which manufacturers must begin testing and certification of youth ATVs, stating that no third party conformity assessment bodies have been accredited by the CPSC to test for conformity with 16 CFR part 1420. The SVIA concluded that it is unlikely that a sufficient number of accredited third party conformity assessment bodies will exist by the end of the requested 60-day extension. As a result, the SVIA also requested that the Commission consider additional forms of relief, such as a further stay of enforcement of these requirements for one year (to November 27, 2011). Hereafter, the comment and the petition will be referred to collectively as "the petition."

III. Commission Action on the Petition

As to the request for a 60-day extension of the date by which manufacturers must begin testing and certification of youth ATVs, the Commission is not aware of any third party conformity assessment bodies that have the requisite accreditation by an ILAC–MRA signatory to test for conformity to 16 CFR part 1420. Given this situation, the Commission is granting the request for a 60-day extension.

The Commission is not granting or denying the request for a one-year stay of enforcement, or other relief, at this time. The Commission invites comment on this request. Comments should be filed by December 30, 2010. The Commission particularly is interested in comments on:

1. What efforts have been made by ATV manufacturers or others to obtain tests of youth ATVs by third party conformity assessment bodies and to encourage third party conformity assessment bodies to become accredited to do so?
2. What is the status of the efforts of third party conformity assessment bodies to become accredited to test youth ATVs, and how long will it take to obtain such accreditation?
3. What barriers currently exist to gaining accreditation that are specifically related to youth ATVs?
4. How are ATV manufacturers currently demonstrating compliance with the ANSI/SVIA–2007–1 standard? What ATV manufacturers are currently doing in-house testing of their ATVs for conformance to the standard? What steps, if any, have these manufacturers taken to have their existing in-house testing facilities become accredited third party conformity assessment bodies?
5. What third party testing facilities are capable of testing youth ATVs to the ANSI/SVIA–2007–1 standard?

IV. Dates Affected by This Extension

This extension is effective beginning on November 27, 2010. Accordingly, each manufacturer of a youth ATV subject to 16 CFR part 1420 must have samples of any such product, or samples that are identical in all material respects to such product, that is manufactured after January 25, 2011, tested by a third party conformity assessment body accredited to do so by the Commission. Further, for youth ATVs manufactured after January 25, 2011, the manufacturer must issue a certificate of compliance with 16 CFR part 1420 based on that testing. (Under the CPSA, the term "manufacturer" includes anyone who manufactures or imports a product. *See* 16 CFR part 1110.)

Furthermore, the Commission is changing the dates it had established for when it would accept the results of tests

of youth ATVs conducted by a third party conformity assessment body before that body became accredited by the CPSC. Accordingly, the Commission will accept a certificate of compliance with 16 CFR part 1420, *Requirements for All Terrain Vehicles,* based on testing performed by an accredited third party conformity assessment body (including a government-owned or government-controlled conformity assessment body, or a firewalled conformity assessment body) prior to the Commission's acceptance of its accreditation, if all the following conditions are met:

- When the product was tested, the testing was done by a third party conformity assessment body that at that time was ISO/IEC 17025 accredited by an ILAC–MRA signatory. For firewalled conformity assessment bodies, the Commission will not accept a certificate of compliance based on testing performed by the third party conformity assessment body unless the firewalled conformity assessment body was accredited by a Commission order as a firewalled conformity assessment body before the product was tested, even though the order will not have included the test methods in 16 CFR part 1420.
- The third party conformity assessment body's application for testing using the test methods in the regulations identified in this notice is accepted by the CPSC on or before December 27, 2010.
- The product was tested on or after November 4, 2008 (the date that 16 CFR part 1420 was published).
- The accreditation scope in effect for the third party conformity assessment body at the time of testing expressly included testing to 16 CFR part 1420.
- The test results show compliance with the applicable current standards and/or regulations.
- The third party conformity assessment body's accreditation, including 16 CFR part 1420 in its scope, remains in effect through February 7, 2011.

Except for the dates that are adjusted by 60 days in this notice, all provisions of the notice of requirements published on August 27, 2010, 75 FR 52616, remain in effect.

Dated: December 3, 2010.

Todd A. Stevenson,

Secretary, Consumer Product Safety Commission.

[FR Doc. 2010–30981 Filed 12–8–10; 8:45 am]

BILLING CODE 6355–01–P

DEPARTMENT OF ENERGY

Federal Energy Regulatory Commission

Combined Notice of Filings No. 1

November 24, 2010.

Take notice that the Commission received the following electric corporate filings:

Docket Numbers: EC11–23–000.
Applicants: Flat Water Wind Farm, LLC., Flat Water Holdings, LLC.
Description: Application for Authorization of Transaction Pursuant to Section 203 of the Federal Power Act of Flat Water Wind Farm, LLC.
Filed Date: 11/23/2010.
Accession Number: 20101123–5111.
Comment Date: 5 p.m. Eastern Time on Tuesday, December 14, 2010.

Docket Numbers: EC11–24–000.
Applicants: Elk Hills Power, LLC.
Description: Application of Elk Hills Power, LLC.
Filed Date: 11/23/2010.
Accession Number: 20101123–5173.
Comment Date: 5 p.m. Eastern Time on Tuesday, December 14, 2010.

Take notice that the Commission received the following exempt wholesale generator filings:

Docket Numbers: EG11–29–000.
Applicants: Snowflake Power, LLC.
Description: Self-Certification of EWG of Snowflake Power, LLC.
Filed Date: 11/23/2010.
Accession Number: 20101123–5134.
Comment Date: 5 p.m. Eastern Time on Tuesday, December 14, 2010.

Docket Numbers: EG11–30–000.
Applicants: Evergreen Wind Power III, LLC.
Description: Notice of EWG Self-Certification of Evergreen Wind Power III, LLC.
Filed Date: 11/23/2010.
Accession Number: 20101123–5135.
Comment Date: 5 p.m. Eastern Time on Tuesday, December 14, 2010.

Docket Numbers: EG11–31–000.
Applicants: Paradise Solar Urban Renewal, L.L.C.
Description: Notice of Self-Certification of Exempt Wholesale Generator Status of Paradise Solar Urban Renewal, L.L.C.
Filed Date: 11/23/2010.
Accession Number: 20101123–5160.
Comment Date: 5 p.m. Eastern Time on Tuesday, December 14, 2010.

Take notice that the Commission received the following electric rate filings:

Docket Numbers: ER06–1399–009.
Applicants: Sunbury Generation LP.
Description: Sunbury Generation LP submits supplement to its notice of non-material change in status pursuant to the Commission's regulation at 18 CFR, Section 35.42.
Filed Date: 11/18/2010.
Accession Number: 20101118–5136.
Comment Date: 5 p.m. Eastern Time on Thursday, December 09, 2010.

Docket Numbers: ER10–1599–002.
Applicants: Invenergy Cannon Falls LLC.
Description: Invenergy Cannon Falls LLC. submits Supplemental Category 1 Exemption Filing, to be effective 11/3/2010.
Filed Date: 11/23/2010.
Accession Number: 20101123–5068.
Comment Date: 5 p.m. Eastern Time on Tuesday, December 14, 2010.

Docket Numbers: ER10–1600–002.
Applicants: Forward Energy LLC.
Description: Forward Energy LLC. submits tariff filing per 35: Supplemental Category 1 Exemption Filing to be effective 10/30/2010.
Filed Date: 11/24/2010.
Accession Number: 20101124–5034.
Comment Date: 5 p.m. Eastern Time on Wednesday, December 15, 2010.

Docket Numbers: ER10–1601–002.
Applicants: Hardee Power Partners Limited.
Description: Hardee Power Partners Limited submits tariff filing per 35: Supplemental Category 1 Exemption Filing to be effective 11/3/2010.
Filed Date: 11/23/2010.
Accession Number: 20101123–5087.
Comment Date: 5 p.m. Eastern Time on Tuesday, December 14, 2010.

Docket Numbers: ER10–1603–002.
Applicants: Grand Ridge Energy LLC.
Description: Grand Ridge Energy LLC. submits tariff filing per 35: Supplemental Category 1 Exemption Filing to be effective 11/3/2010.
Filed Date: 11/24/2010.
Accession Number: 20101124–5035.
Comment Date: 5 p.m. Eastern Time on Wednesday, December 15, 2010.

Docket Numbers: ER10–1604–002.
Applicants: Grand Ridge Energy II LLC.
Description: Grand Ridge Energy II LLC. submits tariff filing per 35: Supplemental Category 1 Exemption Filing to be effective 11/3/2010.
Filed Date: 11/24/2010.
Accession Number: 20101124–5036.
Comment Date: 5 p.m. Eastern Time on Wednesday, December 15, 2010.

Docket Numbers: ER10–1605–002.
Applicants: Grand Ridge Energy III LLC.
Description: Grand Ridge Energy III LLC. submits tariff filing per 35:

Supplemental Category 1 Exemption Filing to be effective 11/3/2010.
Filed Date: 11/24/2010.
Accession Number: 20101124–5037.
Comment Date: 5 p.m. Eastern Time on Wednesday, December 15, 2010.

Docket Numbers: ER10–1606–002.
Applicants: Grand Ridge Energy IV LLC.
Description: Grand Ridge Energy IV LLC. submits tariff filing per 35: Supplemental Category 1 Exemption Filing to be effective 10/30/2010.
Filed Date: 11/23/2010.
Accession Number: 20101123–5075.
Comment Date: 5 p.m. Eastern Time on Tuesday, December 14, 2010.

Docket Numbers: ER10–1607–002
Applicants: Grand Ridge Energy V LLC.
Description: Grand Ridge Energy V LLC. submits tariff filing per 35: Supplemental Category 1 Exemption Filing to be effective 10/30/2010.
Filed Date: 11/23/2010.
Accession Number: 20101123–5081.
Comment Date: 5 p.m. Eastern Time on Tuesday, December 14, 2010.

Docket Numbers: ER10–1608–002.
Applicants: Invenergy TN LLC.
Description: Invenergy TN LLC. submits tariff filing per 35: Supplemental Category 1 Exemption Filing to be effective 11/3/2010.
Filed Date: 11/23/2010.
Accession Number: 20101123–5091.
Comment Date: 5 p.m. Eastern Time on Tuesday, December 14, 2010.

Docket Numbers: ER10–1609–002.
Applicants: Judith Gap Energy LLC.
Description: Judith Gap Energy LLC. submits tariff filing per 35: Supplemental Category 1 Exemption Filing to be effective 11/3/2010.
Filed Date: 11/23/2010.
Accession Number: 20101123–5094.
Comment Date: 5 p.m. Eastern Time on Tuesday, December 14, 2010.

Docket Numbers: ER10–1610–002.
Applicants: Wolverine Creek Energy LLC.
Description: Wolverine Creek Energy LLC. submits tariff filing per 35: Supplemental Category 1 Exemption Filing to be effective 11/3/2010.
Filed Date: 11/23/2010.
Accession Number: 20101123–5097.
Comment Date: 5 p.m. Eastern Time on Tuesday, December 14, 2010.

Docket Numbers: ER10–1611–002.
Applicants: Grays Harbor Energy LLC.
Description: Grays Harbor Energy LLC. submits tariff filing per 35: Supplemental Category 1 Exemption Filing to be effective 11/3/2010.
Filed Date: 11/23/2010.
Accession Number: 20101123–5083.
Comment Date: 5 p.m. Eastern Time on Tuesday, December 14, 2010.

Docket Numbers: ER10–1612–002.
Applicants: Spring Canyon Energy LLC.
Description: Spring Canyon Energy LLC. submits tariff filing per 35: Supplemental Category 1 Exemption Filing to be effective 11/3/2010.
Filed Date: 11/23/2010.
Accession Number: 20101123–5096.
Comment Date: 5 p.m. Eastern Time on Tuesday, December 14, 2010.

Docket Numbers: ER10–1613–002.
Applicants: Spindle Hill Energy LLC.
Description: Spindle Hill Energy LLC. submits tariff filing per 35: Supplemental Category 1 Exemption Filing to be effective 11/3/2010.
Filed Date: 11/23/2010.
Accession Number: 20101123–5095.
Comment Date: 5 p.m. Eastern Time on Tuesday, December 14, 2010.

Docket Numbers: ER10–1614–002.
Applicants: Sheldon Energy LLC.
Description: Sheldon Energy LLC. submits tariff filing per 35: Supplemental Category 1 Exemption Filing to be effective 11/3/2010.
Filed Date: 11/24/2010.
Accession Number: 20101124–5038.
Comment Date: 5 p.m. Eastern Time on Wednesday, December 15, 2010.

Docket Numbers: ER10–1615–002.
Applicants: Willow Creek Energy LLC.
Description: Willow Creek Energy LLC. submits tariff filing per 35: Supplemental Category 1 Exemption Filing to be effective 11/3/2010.
Filed Date: 11/24/2010.
Accession Number: 20101124–5039.
Comment Date: 5 p.m. Eastern Time on Wednesday, December 15, 2010.

Docket Numbers: ER10–2288–001.
Applicants: Optim Energy Marketing LLC.
Description: Optim Energy Marketing LLC. submits tariff filing per 35: Optim MBR Tariff Compliance filing to be effective 11/23/2010.
Filed Date: 11/22/2010.
Accession Number: 20101122–5146.
Comment Date: 5 p.m. Eastern Time on Monday, December 13, 2010.

Docket Numbers: ER10–2302–001.
Applicants: Public Service Company of New Mexico.
Description: Public Service Company of New Mexico submits its Compliance update of its Market Based Rates Tariff, FERC Electric Tariff, Volume No. 3, to be effective 11/24/2010.
Filed Date: 11/24/2010.
Accession Number: 20101124–5000.
Comment Date: 5 p.m. Eastern Time on Wednesday, December 15, 2010.

Docket Numbers: ER10–2487–000.
Applicants: Pacific Summit Energy LLC.
Description: Pacific Summit Energy LLC. submits tariff filing per: Pacific Summit Energy LLC. Supplemental Baseline to be effective 11/9/2010.
Filed Date: 11/09/2010.
Accession Number: 20101109–5120.
Comment Date: 5 p.m. Eastern Time on Tuesday, November 30, 2010.

Docket Numbers: ER10–2653–001.
Applicants: Snowflake Power, LLC.
Description: Snowflake Power, LLC. Notice of Non-Material Change in Status.
Filed Date: 11/23/2010.
Accession Number: 20101123–5109.
Comment Date: 5 p.m. Eastern Time on Tuesday, December 14, 2010.

Docket Numbers: ER10–2918–001.
Applicants: Carr Street Generating Station, L.P.
Description: Carr Street Generating Station, L.P. submits tariff filing per 35: Car Street Generating Station, L.P. Baseline Market-Based Rate Tariff to be effective 9/24/2010.
Filed Date: 11/22/2010.
Accession Number: 20101122–5145.
Comment Date: 5 p.m. Eastern Time on Monday, December 13, 2010.

Docket Numbers: ER10–2933–001.
Applicants: ISO New England Inc.
Description: ISO New England Inc. submits tariff filing per 35: Notice of Effective Date for Unsecured Credit Revisions ER10–2933 to be effective 1/26/2011.
Filed Date: 11/18/2010.
Accession Number: 20101118–5046.
Comment Date: 5 p.m. Eastern Time on Thursday, December 09, 2010.

Docket Numbers: ER10–3018–001.
Applicants: Delmarva Power & Light Company.
Description: Delmarva Power & Light Company submits compliance filing to remove First Revised Volume No 1 designation on its Market Based Rate Tariff, to be effective 9/27/2010.
Filed Date: 11/18/2010.
Accession Number: 20101118–5000.
Comment Date: 5 p.m. Eastern Time on Thursday, December 09, 2010.

Docket Numbers: ER10–3150–001.
Applicants: Sunoco Power Generation LLC.
Description: Sunoco Power Generation LLC. submits tariff filing per 35: Sunoco Power Generation Baseline Filing to be effective 11/18/2010.
Filed Date: 11/18/2010.
Accession Number: 20101118–5063.
Comment Date: 5 p.m. Eastern Time on Thursday, December 09, 2010.

Docket Numbers: ER10–3183–001.

Applicants: Sunoco Power Marketing, LLC.

Description: Sunoco Power Marketing, LLC submits tariff filing per 35: Sunoco Power Marketing Baseline Filing to be effective 11/18/2010.

Filed Date: 11/18/2010.

Accession Number: 20101118–5062.

Comment Date: 5 p.m. Eastern Time on Thursday, December 09, 2010.

Docket Numbers: ER10–3319–000.

Applicants: Astoria Energy II LLC.

Description: Astoria Energy II Files Letter Per Staff Under ER10–3319 (11–18–2010) with App. B and Privileged Supplement.

Filed Date: 11/18/2010.

Accession Number: 20101118–5167.

Comment Date: 5 p.m. Eastern Time on Thursday, December 09, 2010.

Docket Numbers: ER10–3319–001.

Applicants: Astoria Energy II LLC.

Description: Astoria Energy II LLC submits tariff filing per 35: Astoria Energy II LLC. MBR E–Tariff to be effective 11/30/2010.

Filed Date: 11/23/2010.

Accession Number: 20101123–5034.

Comment Date: 5 p.m. Eastern Time on Tuesday, December 14, 2010.

Docket Numbers: ER11–2020–001.

Applicants: Domtar Paper Company, LLC.

Description: Domtar Paper Company, LLC. submits tariff filing per 35: Amendment to Domtar Paper MBR Filing to be effective 1/1/2011.

Filed Date: 11/23/2010.

Accession Number: 20101123–5119.

Comment Date: 5 p.m. Eastern Time on Tuesday, December 14, 2010.

Docket Numbers: ER11–2021–001.

Applicants: Domtar A.W. LLC.

Description: Domtar A.W. LLC. submits tariff filing per 35: Domtar AW MBR Amendment to be effective 1/1/2011.

Filed Date: 11/23/2010.

Accession Number: 20101123–5123.

Comment Date: 5 p.m. Eastern Time on Tuesday, December 14, 2010.

Docket Numbers: ER11–2032–001.

Applicants: New Harvest Wind Project LLC.

Description: New Harvest Wind Project LLC submits tariff filing per 35.17(b): Amendment to Market-Based Rate Application to be effective 1/3/2011.

Filed Date: 11/18/2010.

Accession Number: 20101118–5028.

Comment Date: 5 p.m. Eastern Time on Thursday, December 09, 2010.

Docket Numbers: ER11–2058–001.

Applicants: PJM Interconnection, L.L.C., Commonwealth Edison Company.

Description: PJM Interconnection, L.L.C. submits tariff filing per 35.17(b): ComEd Submits Appendices to ComED & ATC Upgrade Agreement to be effective 11/9/2010.

Filed Date: 11/19/2010.

Accession Number: 20101119–5163.

Comment Date: 5 p.m. Eastern Time on Tuesday, November 30, 2010.

Docket Numbers: ER11–2112–001.

Applicants: Blue Creek Wind Farm LLC.

Description: Blue Creek Wind Farm LLC. submits tariff filing per 35.17(b): Amendment to Market-Based Rate Application to be effective 1/14/2011.

Filed Date: 11/18/2010.

Accession Number: 20101118–5029.

Comment Date: 5 p.m. Eastern Time on Thursday, December 09, 2010.

Docket Numbers: ER11–2139–001.

Applicants: California Independent System Operator Corporation.

Description: California Independent System Operator Corporation submits tariff filing per 35.17(b): 2010–11–22 Errata to CAISO's LGIA for Manzana Wind Project with SCE to be effective 1/10/2011.

Filed Date: 11/22/2010.

Accession Number: 20101122–5054.

Comment Date: 5 p.m. Eastern Time on Monday, December 13, 2010.

Docket Numbers: ER11–2147–000.

Applicants: Southwest Power Pool, Inc.

Description: Errata Filing of Southwest Power Pool, Inc.

Filed Date: 11/23/2010.

Accession Number: 20101123–5061.

Comment Date: 5 p.m. Eastern Time on Tuesday, December 14, 2010.

Docket Numbers: ER11–2171–000.

Applicants: HOP Energy, LLC.

Description: HOP Energy, LLC. submits tariff filing per 35.1: FERC Baseline Electric Tariff to be effective 11/1/2010.

Filed Date: 11/23/2010.

Accession Number: 20101123–5063.

Comment Date: 5 p.m. Eastern Time on Tuesday, December 14, 2010.

Docket Numbers: ER11–2172–000.

Applicants: Vermont Transco, LLC.

Description: Vermont Transco, LLC. submits tariff filing per 35.12: Substation Participation Agreement, Service Agreement No. 1 to be effective 12/1/2010.

Filed Date: 11/23/2010.

Accession Number: 20101123–5066.

Comment Date: 5 p.m. Eastern Time on Tuesday, December 14, 2010.

Docket Numbers: ER11–2173–000.

Applicants: Midwest Independent Transmission System Operator, Inc.

Description: Midwest Independent Transmission System Operator, Inc. submits Wholesale Distribution Service Agreement with Ameren Illinois Company et al, to be effective 10/1/2010.

Filed Date: 11/23/2010.

Accession Number: 20101123–5070.

Comment Date: 5 p.m. Eastern Time on Tuesday, December 14, 2010.

Docket Numbers: ER11–2174–000.

Applicants: Duke Energy Ohio, Inc.

Description: Notice of Cancellation of DEO RS no. 61.

Filed Date: 11/23/2010.

Accession Number: 20101123–5108.

Comment Date: 5 p.m. Eastern Time on Tuesday, December 14, 2010.

Docket Numbers: ER11–2175–000.

Applicants: SGE Energy Sourcing, LLC.

Description: SGE Energy Sourcing, LLC. submits tariff filing per 35.1: Baseline Market-Based Rate Tariff Filing for SGE Energy Sourcing, LLC. to be effective 11/23/2010.

Filed Date: 11/23/2010.

Accession Number: 20101123–5115.

Comment Date: 5 p.m. Eastern Time on Tuesday, December 14, 2010.

Docket Numbers: ER11–2176–000.

Applicants: Stream Energy Pennsylvania, LLC.

Description: Stream Energy Pennsylvania, LLC submits tariff filing per 35.1: Stream Energy Pennsylvania, LLC. Market-Based Rate Tariff (Baseline) to be effective 11/23/2010.

Filed Date: 11/23/2010.

Accession Number: 20101123–5122.

Comment Date: 5 p.m. Eastern Time on Tuesday, December 14, 2010.

Docket Numbers: ER11–2177–000.

Applicants: Southern California Edison Company.

Description: Southern California Edison Company submits tariff filing per 35.13(a)(2)(iii): LGIA Granite Wind LLC. SA 91 to be effective 11/24/2010.

Filed Date: 11/23/2010.

Accession Number: 20101123–5124.

Comment Date: 5 p.m. Eastern Time on Tuesday, December 14, 2010.

Docket Numbers: ER11–2178–000.

Applicants: Southern California Edison Company.

Description: Southern California Edison Company submits tariff filing per 35.13(a)(2)(iii): Addition of three transmission projects to TO Tariff CWIP Ratemaking Mechanism to be effective 12/1/2010.

Filed Date: 11/23/2010.

Accession Number: 20101123–5127.

Comment Date: 5 p.m. Eastern Time on Tuesday, December 14, 2010.

Docket Numbers: ER11–2179–000.

Applicants: Planet Energy (New York) Corp.

Description: Planet Energy (New York) Corp. submits tariff filing per 35.1: Planet Energy (New York) MBR Application to be effective 11/23/2010.

Filed Date: 11/23/2010.

Accession Number: 20101123–5128.

Comment Date: 5 p.m. Eastern Time on Tuesday, December 14, 2010.

Docket Numbers: ER11–2180–000.

Applicants: Ameren Illinois Company.

Description: Ameren Illinois Company submits tariff filing per 35.13(a)(2)(iii): Amendment D to Legacy Service Agreements to be effective, 12/31/9998.

Filed Date: 11/24/2010.

Accession Number: 20101124–5032.

Comment Date: 5 p.m. Eastern Time on Wednesday, December 15, 2010.

Docket Numbers: ER11–2181–000.

Applicants: Ameren Illinois Company.

Description: Ameren Illinois Company submits tariff filing per 35.13(a)(2)(iii): Amendment E to Legacy Agreements to be effective 12/31/9998.

Filed Date: 11/24/2010.

Accession Number: 20101124–5040.

Comment Date: 5 p.m. Eastern Time on Wednesday, December 15, 2010.

Take notice that the Commission received the following foreign utility company status filings:

Docket Numbers: FC11–2–000.

Applicants: Starwood Solar V, LLC.

Description: Notice of Self-Certification of Foreign Utility Company Status of Starwood Solar V, LLC..

Filed Date: 11/22/2010.

Accession Number: 20101122–5218.

Comment Date: 5 p.m. Eastern Time on Monday, December 13, 2010.

Any person desiring to intervene or to protest in any of the above proceedings must file in accordance with Rules 211 and 214 of the Commission's Rules of Practice and Procedure (18 CFR 385.211 and 385.214) on or before 5 p.m. Eastern time on the specified comment date. It is not necessary to separately intervene again in a subdocket related to a compliance filing if you have previously intervened in the same docket. Protests will be considered by the Commission in determining the appropriate action to be taken, but will not serve to make protestants parties to the proceeding. Anyone filing a motion to intervene or protest must serve a copy of that document on the Applicant. In reference to filings initiating a new proceeding, interventions or protests submitted on or before the comment deadline need not be served on persons other than the Applicant.

The Commission encourages electronic submission of protests and interventions in lieu of paper, using the FERC Online links at *http://www.ferc.gov.* To facilitate electronic service, persons with Internet access who will eFile a document and/or be listed as a contact for an intervenor must create and validate an eRegistration account using the eRegistration link. Select the eFiling link to log on and submit the intervention or protests.

Persons unable to file electronically should submit an original and 14 copies of the intervention or protest to the Federal Energy Regulatory Commission, 888 First St. NE., Washington, DC 20426.

The filings in the above proceedings are accessible in the Commission's eLibrary system by clicking on the appropriate link in the above list. They are also available for review in the Commission's Public Reference Room in Washington, DC. There is an eSubscription link on the Web site that enables subscribers to receive e-mail notification when a document is added to a subscribed dockets(s). For assistance with any FERC Online service, please e-mail *FERCOnlineSupport@ferc.gov.* or call (866) 208–3676 (toll free). For TTY, call (202) 502–8659.

Nathaniel J. Davis, Sr.,

Deputy Secretary.

[FR Doc. 2010–30919 Filed 12–8–10; 8:45 am]

BILLING CODE 6717–01–P

DEPARTMENT OF ENERGY

Federal Energy Regulatory Commission

Combined Notice of Filings No. 1

November 23, 2010.

Take notice that the Commission has received the following Natural Gas Pipeline Rate and Refund Report filings:

Docket Numbers: RP11–1537–000.

Applicants: Southern Star Central Gas Pipeline, Inc.

Description: Southern Star Central Gas Pipeline, Inc. submits tariff filing per 154.204: Tariff Clean-up Filing November 2010 to be effective 12/20/2010.

Filed Date: 11/19/2010.

Accession Number: 20101119–5033.

Comment Date: 5 p.m. Eastern Time on Wednesday, December 01, 2010.

Docket Numbers: RP11–1539–000.

Applicants: National Fuel Gas Supply Corporation.

Description: National Fuel Gas Supply Corporation submits tariff filing per 154.204: Open Season Revision to be effective 12/19/2010.

Filed Date: 11/19/2010.

Accession Number: 20101119–5069.

Comment Date: 5 p.m. Eastern Time on Wednesday, December 01, 2010.

Docket Numbers: RP11–1540–000.

Applicants: Chandeleur Pipe Line Company.

Description: Chandeleur Pipe Line Company submits tariff filing per 154.403(d)(2): Chandeleur FLLA to be effective 1/1/2011.

Filed Date: 11/22/2010.

Accession Number: 20101122–5109.

Comment Date: 5 p.m. Eastern Time on Monday, December 06, 2010.

Docket Numbers: RP11–1541–000.

Applicants: Portland Natural Gas Transmission System.

Description: Portland Natural Gas Transmission System submits Second Revised Sheet 100 *et al* to Second Revised Volume No 1, to be effective 12/1/2010.

Filed Date: 11/23/2010.

Accession Number: 20101123–5000.

Comment Date: 5 p.m. Eastern Time on Monday, December 06, 2010.

Docket Numbers: CP11–37–000.

Applicants: Transcontinental Gas Pipe Line Company, LLC.

Description: Transcontinental Gas Pipe Line Company, LLC submits an application to abandon service under Rate Schedule FT for York County Natural Gas Authority.

Filed Date: 11/18/2010.

Accession Number: 201011185134.

Comment Date: 5 p.m. Eastern Time on Monday, December 06, 2010.

Any person desiring to intervene or to protest in any of the above proceedings must file in accordance with Rules 211 and 214 of the Commission's Rules of Practice and Procedure (18 CFR 385.211 and 385.214) on or before 5 p.m. Eastern time on the specified comment date. It is not necessary to separately intervene again in a subdocket related to a compliance filing if you have previously intervened in the same docket. Protests will be considered by the Commission in determining the appropriate action to be taken, but will not serve to make protestants parties to the proceeding. Anyone filing a motion to intervene or protest must serve a copy of that document on the Applicant. In reference to filings initiating a new proceeding, interventions or protests submitted on or before the comment deadline need not be served on persons other than the Applicant.

The Commission encourages electronic submission of protests and interventions in lieu of paper, using the FERC Online links at *http://www.ferc.gov.* To facilitate electronic service, persons with Internet access

who will eFile a document and/or be listed as a contact for an intervenor must create and validate an eRegistration account using the eRegistration link. Select the eFiling link to log on and submit the intervention or protests.

Persons unable to file electronically should submit an original and 14 copies of the intervention or protest to the Federal Energy Regulatory Commission, 888 First St., NE., Washington, DC 20426.

The filings in the above proceedings are accessible in the Commission's eLibrary system by clicking on the appropriate link in the above list. They are also available for review in the Commission's Public Reference Room in Washington, DC. There is an eSubscription link on the Web site that enables subscribers to receive e-mail notification when a document is added to a subscribed docket(s). For assistance with any FERC Online service, please e-mail *FERCOnlineSupport@ferc.gov.* or call (866) 208–3676 (toll free). For TTY, call (202) 502–8659.

Nathaniel J. Davis, Sr.,

Deputy Secretary.

[FR Doc. 2010–30923 Filed 12–8–10; 8:45 am]

BILLING CODE 6717–01–P

DEPARTMENT OF ENERGY

Federal Energy Regulatory Commission

Combined Notice of Filings No. 2

December 1, 2010.

Take notice that the Commission received the following electric rate filings:

Docket Numbers: ER11–2250–000.
Applicants: PPL University Park, LLC.
Description: PPL University Park, LLC submits tariff filing per 35: PPL University Park, LLC's Notice of Change in Status Market-Based Rate Filing to be effective 11/1/2010.
Filed Date: 12/01/2010.
Accession Number: 20101201–5147.
Comment Date: 5 p.m. Eastern Time on Wednesday, December 22, 2010.

Docket Numbers: ER11–2251–000.
Applicants: PPL Wallingford Energy LLC.
Description: PPL Wallingford Energy LLC submits tariff filing per 35: PPL Wallingford Energy, LLC's Notice of Change in Status MBR Filing to be effective 11/1/2010.
Filed Date: 12/01/2010.
Accession Number: 20101201–5150.
Comment Date: 5 p.m. Eastern Time on Wednesday, December 22, 2010.

Docket Numbers: ER11–2252–000.
Applicants: EDFD–West Valley.
Description: EDFD–West Valley submits tariff filing per 35.15: West Valley Cancellation Filing to be effective 12/2/2010.
Filed Date: 12/01/2010.
Accession Number: 20101201–5179.
Comment Date: 5 p.m. Eastern Time on Wednesday, December 22, 2010.

Docket Numbers: ER11–2253–000.
Applicants: EDF Inc.
Description: EDF Inc. submits tariff filing per 35.15: EDF Tariff Cancellation Filing to be effective 12/2/2010.
Filed Date: 12/01/2010.
Accession Number: 20101201–5182.
Comment Date: 5 p.m. Eastern Time on Wednesday, December 22, 2010.

Docket Numbers: ER11–2254–000.
Applicants: BE Alabama LLC.
Description: BE Alabama LLC submits tariff filing per 35: Order 697 Compliance Filing to be effective 12/1/2010.
Filed Date: 12/01/2010.
Accession Number: 20101201–5183.
Comment Date: 5 p.m. Eastern Time on Wednesday, December 22, 2010.

Docket Numbers: ER11–2255–000.
Applicants: BE Allegheny LLC.
Description: BE Allegheny LLC submits tariff filing per 35: Order 697 Compliance Filing to be effective 12/1/2010.
Filed Date: 12/01/2010.
Accession Number: 20101201–5184.
Comment Date: 5 p.m. Eastern Time on Wednesday, December 22, 2010.

Docket Numbers: ER11–2256–000.
Applicants: California Independent System Operator Corporation.
Description: California Independent System Operator Corporation submits tariff filing per 35.13(a)(2)(iii): 2010–12–01 CAISO's Capacity Procurement Mechanism Amendment to be effective 4/1/2011.
Filed Date: 12/01/2010.
Accession Number: 20101201–5185.
Comment Date: 5 p.m. Eastern Time on Wednesday, December 22, 2010.

Docket Numbers: ER11–2257–000.
Applicants: BE Ironwood LLC.
Description: BE Ironwood LLC submits tariff filing per 35: Order 697 Compliance Filing to be effective 12/1/2010.
Filed Date: 12/01/2010.
Accession Number: 20101201–5186.
Comment Date: 5 p.m. Eastern Time on Wednesday, December 22, 2010.

Docket Numbers: ER11–2258–000.
Applicants: EDFD–Handsome Lake.
Description: EDFD–Handsome Lake submits tariff filing per 35.15: EDFD–Handsome Lake Tariff Cancellation Filing to be effective 12/2/2010.
Filed Date: 12/01/2010.
Accession Number: 20101201–5187.
Comment Date: 5 p.m. Eastern Time on Wednesday, December 22, 2010.

Docket Numbers: ER11–2259–000.
Applicants: BE CA LLC.
Description: BE CA LLC submits tariff filing per 35: Order 697 Compliance Filing to be effective 12/1/2010.
Filed Date: 12/01/2010.
Accession Number: 20101201–5188.
Comment Date: 5 p.m. Eastern Time on Wednesday, December 22, 2010.

Docket Numbers: ER11–2260–000.
Applicants: BE KJ LLC.
Description: BE KJ LLC submits tariff filing per 35: Order 697 Compliance Filing to be effective 12/1/2010.
Filed Date: 12/01/2010.
Accession Number: 20101201–5189.
Comment Date: 5 p.m. Eastern Time on Wednesday, December 22, 2010.

Docket Numbers: ER11–2261–000.
Applicants: BE Louisiana LLC.
Description: BE Louisiana LLC submits tariff filing per 35: Order 697 Compliance Filing to be effective 12/1/2010.
Filed Date: 12/01/2010.
Accession Number: 20101201–5190.
Comment Date: 5 p.m. Eastern Time on Wednesday, December 22, 2010.

Docket Numbers: ER11–2262–000.
Applicants: BE Rayle LLC.
Description: BE Rayle LLC submits tariff filing per 35: Order 697 Compliance Filing to be effective 12/1/2010.
Filed Date: 12/01/2010.
Accession Number: 20101201–5191.
Comment Date: 5 p.m. Eastern Time on Wednesday, December 22, 2010.

Docket Numbers: ER11–2263–000.
Applicants: Cedar Brakes I, L.L.C.
Description: Cedar Brakes I, L.L.C. submits tariff filing per 35: Order 697 Compliance Filing to be effective 12/1/2010.
Filed Date: 12/01/2010.
Accession Number: 20101201–5192.
Comment Date: 5 p.m. Eastern Time on Wednesday, December 22, 2010.

Docket Numbers: ER11–2264–000.
Applicants: Cedar Brakes II, L.L.C.
Description: Cedar Brakes II, L.L.C. submits tariff filing per 35: Order 697 Compliance Filing to be effective 12/1/2010.
Filed Date: 12/01/2010.
Accession Number: 20101201–5193.
Comment Date: 5 p.m. Eastern Time on Wednesday, December 22, 2010.

Docket Numbers: ER11–2265–000.
Applicants: Brush Cogeneration Partners.
Description: Brush Cogeneration Partners submits tariff filing per

35.13(a)(2)(iii): Brush Cogeneration ETariff Amend to be effective 12/30/2010.

Filed Date: 12/01/2010.

Accession Number: 20101201–5194.

Comment Date: 5 p.m. Eastern Time on Wednesday, December 22, 2010.

Docket Numbers: ER11–2266–000.

Applicants: Keystone Generation, LLC.

Description: Keystone Generation, LLC submits tariff filing per 35.15: Keystone Tariff Cancellation Filing to be effective 12/2/2010.

Filed Date: 12/01/2010.

Accession Number: 20101201–5195.

Comment Date: 5 p.m. Eastern Time on Wednesday, December 22, 2010.

Docket Numbers: ER11–2267–000.

Applicants: Central Power & Lime LLC.

Description: Central Power & Lime LLC submits tariff filing per 35: Order 697 Compliance Filing to be effective 12/1/2010.

Filed Date: 12/01/2010.

Accession Number: 20101201–5196.

Comment Date: 5 p.m. Eastern Time on Wednesday, December 22, 2010.

Docket Numbers: ER11–2268–000.

Applicants: Vineland Energy LLC.

Description: Vineland Energy LLC submits tariff filing per 35: Order 697 Compliance Filing to be effective 12/1/2010.

Filed Date: 12/01/2010.

Accession Number: 20101201–5198.

Comment Date: 5 p.m. Eastern Time on Wednesday, December 22, 2010.

Docket Numbers: ER11–2269–000.

Applicants: Utility Contract Funding, L.L.C.

Description: Utility Contract Funding, L.L.C. submits tariff filing per 35: Order 697 Compliance Filing to be effective 12/1/2010.

Filed Date: 12/01/2010.

Accession Number: 20101201–5199.

Comment Date: 5 p.m. Eastern Time on Wednesday, December 22, 2010.

Docket Numbers: ER11–2270–000.

Applicants: J.P. Morgan Commodities Canada Corporation.

Description: J.P. Morgan Commodities Canada Corporation submits tariff filing per 35: Order 697 Compliance Filing to be effective 12/1/2010.

Filed Date: 12/01/2010.

Accession Number: 20101201–5201.

Comment Date: 5 p.m. Eastern Time on Wednesday, December 22, 2010.

Docket Numbers: ER11–2271–000.

Applicants: Conemaugh Generation, LLC.

Description: Conemaugh Generation, LLC submits tariff filing per 35.15: Conemaugh Tariff Cancellation Filing to be effective 12/2/2010.

Filed Date: 12/01/2010.

Accession Number: 20101201–5202.

Comment Date: 5 p.m. Eastern Time on Wednesday, December 22, 2010.

Docket Numbers: ER11–2272–000.

Applicants: J.P. Morgan Ventures Energy Corporation.

Description: J.P. Morgan Ventures Energy Corporation submits tariff filing per 35: Order 697 Compliance Filing to be effective 12/1/2010.

Filed Date: 12/01/2010.

Accession Number: 20101201–5203.

Comment Date: 5 p.m. Eastern Time on Wednesday, December 22, 2010.

Docket Numbers: ER11–2273–000.

Applicants: South Carolina Electric & Gas Transmission.

Description: South Carolina Electric & Gas Transmission submits tariff filing per 35.13(a)(2)(iii): Rate Schedule Change Other Than Rate Increases to be effective 12/1/2010.

Filed Date: 12/01/2010.

Accession Number: 20101201–5204.

Comment Date: 5 p.m. Eastern Time on Wednesday, December 22, 2010.

Docket Numbers: ER11–2274–000.

Applicants: C.P. Crane Power, LLC.

Description: C.P. Crane Power, LLC submits tariff filing per 35.15: CP Crane Cancellation Filing to be effective 12/2/2010.

Filed Date: 12/01/2010.

Accession Number: 20101201–5206.

Comment Date: 5 p.m. Eastern Time on Wednesday, December 22, 2010.

Docket Numbers: ER11–2275–000.

Applicants: Midwest Independent System Transmission Operator, Inc.

Description: Report of Midwest Independent System Transmission Operator, Inc.

Filed Date: 12/01/2010.

Accession Number: 20101201–5276.

Comment Date: 5 p.m. Eastern Time on Wednesday, December 22, 2010.

Docket Numbers: ER11–2276–000.

Applicants: Midwest Independent Transmission System Operator, Inc.

Description: Midwest Independent Transmission System Operator, Inc. submits tariff filing per 35.13(a)(2)(i): DEI–DEI WDS x 6 to be effective 12/1/2010.

Filed Date: 12/02/2010.

Accession Number: 20101202–5029.

Comment Date: 5 p.m. Eastern Time on Thursday, December 23, 2010.

Docket Numbers: ER11–2277–000.

Applicants: Midwest Independent Transmission System Operator, Inc.

Description: Midwest Independent Transmission System Operator, Inc. submits the ITC Midwest Joint Pricing Zone Revenue Allocation Agreement, to be effective 12/3/2010.

Filed Date: 12/02/2010.

Accession Number: 20101202–5040.

Comment Date: 5 p.m. Eastern Time on Thursday, December 23, 2010.

Docket Numbers: ER11–2278–000.

Applicants: Duke Energy Indiana, Inc.

Description: Duke Energy Indiana, Inc. Notice of Cancellation.

Filed Date: 12/01/2010.

Accession Number: 20101201–5277.

Comment Date: 5 p.m. Eastern Time on Wednesday, December 22, 2010.

Docket Numbers: ER11–2279–000.

Applicants: Wabash Valley Power Association, Inc.

Description: Wabash Valley Power Association, Inc. submits tariff filing per 35: WVPA Baseline—FERC Electric Tariff Vol No. 1–Section 2—Service Agreements to be effective 12/2/2010.

Filed Date: 12/02/2010.

Accession Number: 20101202–5051.

Comment Date: 5 p.m. Eastern Time on Thursday, December 23, 2010.

Take notice that the Commission received the following public utility holding company filings:

Docket Numbers: PH11–3–000.

Applicants: PPL Corporation.

Description: Notification of Material Change in Facts of PPL Corporation.

Filed Date: 12/01/2010.

Accession Number: 20101201–5231.

Comment Date: 5 p.m. Eastern Time on Wednesday, December 22, 2010.

Docket Numbers: PH11–4–000.

Applicants: The GE Companies.

Description: Revised Form FERC–65A of The GE Companies.

Filed Date: 12/01/2010.

Accession Number: 20101201–5270.

Comment Date: 5 p.m. Eastern Time on Wednesday, December 22, 2010.

Take notice that the Commission received the following electric reliability filings:

Docket Numbers: RR08–4–006.

Applicants: North American Electric Reliability Corporation.

Description: Compliance Filing of the North American Electric Reliability Corporation in Response to the Order on Violation Severity Levels Proposed by the Electric Reliability Organization.

Filed Date: 12/01/2010.

Accession Number: 20101201–5245.

Comment Date: 5 p.m. Eastern Time on Wednesday, December 22, 2010.

Any person desiring to intervene or to protest in any of the above proceedings must file in accordance with Rules 211 and 214 of the Commission's Rules of Practice and Procedure (18 CFR 385.211 and 385.214) on or before 5 p.m. Eastern time on the specified comment date. It is not necessary to separately intervene again in a subdocket related to a

compliance filing if you have previously intervened in the same docket. Protests will be considered by the Commission in determining the appropriate action to be taken, but will not serve to make protestants parties to the proceeding. Anyone filing a motion to intervene or protest must serve a copy of that document on the Applicant. In reference to filings initiating a new proceeding, interventions or protests submitted on or before the comment deadline need not be served on persons other than the Applicant.

The Commission encourages electronic submission of protests and interventions in lieu of paper, using the FERC Online links at *http://www.ferc.gov.* To facilitate electronic service, persons with Internet access who will eFile a document and/or be listed as a contact for an intervenor must create and validate an eRegistration account using the eRegistration link. Select the eFiling link to log on and submit the intervention or protests.

Persons unable to file electronically should submit an original and 14 copies of the intervention or protest to the Federal Energy Regulatory Commission, 888 First St. NE., Washington, DC 20426.

The filings in the above proceedings are accessible in the Commission's eLibrary system by clicking on the appropriate link in the above list. They are also available for review in the Commission's Public Reference Room in Washington, DC. There is an eSubscription link on the Web site that enables subscribers to receive e-mail notification when a document is added to a subscribed dockets(s). For assistance with any FERC Online service, please e-mail *FERCOnlineSupport@ferc.gov.* or call (866) 208–3676 (toll free). For TTY, call (202) 502–8659.

Nathaniel J. Davis, Sr.,

Deputy Secretary.

[FR Doc. 2010–30940 Filed 12–8–10; 8:45 am]

BILLING CODE 6717–01–P

DEPARTMENT OF ENERGY

Federal Energy Regulatory Commission

Combined Notice of Filings No. 1

December 2, 2010.

Take notice that the Commission received the following electric corporate filings:

Docket Numbers: EC11–12–000.

Applicants: Agri Beef Co., E. Robert Mooney, Mendata LP, Brookfield Power US Holding America Co.

Description: Errata filing of Mendata, LP, Agri Beef Co., E. Robert Mooney and Brookfield Power US Holding America Co.

Filed Date: 11/29/2010.

Accession Number: 20101129–5174.

Comment Date: 5 p.m. Eastern Time on Thursday, December 09, 2010.

Take notice that the Commission received the following electric rate filings:

Docket Numbers: ER00–1816–010; ER97–324–022; ER97–3834–027; ER05–1469–006; ER07–415–006; ER01–2317–012; ER08–1418–005; ER10–663–004; ER09–1061–004.

Applicants: DTE Pontiac North LLC, DTE Energy Trading, Inc., The Detroit Edison Company, DTE Stoneman, LLC, DTE River Rouge No. 1, LLC, DTE East China, LLC, Metro Energy, LLC, DTE Energy Supply, Inc., Woodland Biomas Power, Ltd.

Description: Notice of Change in Status of The Detroit Edison Company, *et. al.*

Filed Date: 11/30/2010.

Accession Number: 20101130–5320.

Comment Date: 5 p.m. Eastern Time on Tuesday, December 21, 2010.

Docket Numbers: ER01–2317–011; ER97–324–021; ER97–3834–027; ER05–1469–005; ER07–415–006; ER00–1816–009; ER08–1418–004; ER10–663–003; ER09–1061–003.

Applicants: Metro Energy, LLC; DTE Pontiac North LLC, DTE Energy Trading, Inc., The Detroit Edison Company, DTE Stoneman, LLC, DTE River Rouge No. 1, LLC, DTE East China, LLC, Metro Energy, LLC, DTE Energy Supply, Inc., Woodland Biomas Power, Ltd.

Description: Notice of Non-Material Change in Status of The Detroit Edison Company, *et al.*

Filed Date: 11/30/2010.

Accession Number: 20101130–5237.

Comment Date: 5 p.m. Eastern Time on Tuesday, December 21, 2010.

Docket Numbers: ER03–198–017.

Applicants: Pacific Gas and Electric Company.

Description: Notice of Non-Material Change in Status of Pacific Gas and Electric Company.

Filed Date: 12/01/2010.

Accession Number: 20101201–5086.

Comment Date: 5 p.m. Eastern Time on Wednesday, December 22, 2010.

Docket Numbers: ER10–1128–001.

Applicants: Commonwealth Edison Company.

Description: Commonwealth Edison Company submits its baseline tariff for ComEd PSRT–1, to be effective 11/9/2010.

Filed Date: 12/01/2010.

Accession Number: 20101201–5003.

Comment Date: 5 p.m. Eastern Time on Wednesday, December 22, 2010.

Docket Numbers: ER10–1511–001; ER10–1714–001; ER10–2231–001; ER10–3247–002.

Applicants: Kentucky Utilities Company, Louisville Gas & Electric Company, Electric Energy, Inc., LG&E Energy Marketing Inc.

Description: Notice of Change in Status Regarding Market-Based Rate Authority of the PPL Companies.

Filed Date: 12/01/2010.

Accession Number: 20101201–5274.

Comment Date: 5 p.m. Eastern Time on Wednesday, December 22, 2010.

Docket Numbers: ER10–1602–002.

Applicants: Beech Ridge Energy LLC.

Description: Beech Ridge Energy LLC submits tariff filing per 35: Supplemental Category 1 Exemption Filing to be effective 10/30/2010.

Filed Date: 11/19/2010.

Accession Number: 20101119–5034.

Comment Date: 5 p.m. Eastern Time on Friday, December 10, 2010.

Docket Numbers: ER10–2126–001.

Applicants: Idaho Power Company.

Description: Idaho Power Company submits their Baseline Filing to Comply with Order No. 714, to be effective 12/1/2010.

Filed Date: 12/02/2010.

Accession Number: 20101202–5001.

Comment Date: 5 p.m. Eastern Time on Thursday, December 23, 2010.

Docket Numbers: ER10–2214–002.

Applicants: Zion Energy LLC.

Description: Zion Energy LLC submits tariff filing per 35.17(b): Reactive Power Settlement Agreement to be effective 12/1/2010.

Filed Date: 11/30/2010.

Accession Number: 20101130–5233.

Comment Date: 5 p.m. Eastern Time on Friday, December 10, 2010.

Docket Numbers: ER10–2820–001.

Applicants: Louisville Gas and Electric Company.

Description: Louisville Gas and Electric Company submits tariff filing per 35: 12_1_10 Errata to 092210 AttachM IIS ER10_2820 to be effective 9/23/2010.

Filed Date: 12/01/2010.

Accession Number: 20101201–5200.

Comment Date: 5 p.m. Eastern Time on Wednesday, December 22, 2010.

Docket Numbers: ER11–65–001.

Applicants: Capitol District Energy Center Cogeneration Associates

Description: Capitol District Energy Center Cogeneration Associates submits

tariff filing per 35.17(b): Amendment to Revised Market-Based Rate Tariff to be effective 10/9/2010.

Filed Date: 12/02/2010.

Accession Number: 20101202–5019.

Comment Date: 5 p.m. Eastern Time on Thursday, December 23, 2010.

Docket Numbers: ER11–93–001.

Applicants: Midwest Independent Transmission System Operator, Inc.

Description: Midwest Independent Transmission System Operator, Inc. submits tariff filing per 35.17(b): G252 Amendment to be effective 10/14/2010.

Filed Date: 12/01/2010.

Accession Number: 20101201–5177.

Comment Date: 5 p.m. Eastern Time on Wednesday, December 22, 2010.

Docket Numbers: ER11–1976–001.

Applicants: Midwest Independent Transmission System Operator, Inc.

Description: Midwest Independent Transmission System Operator, Inc. submits tariff filing per 35.17(b): MidAmerican-Lake View WDS Errata to be effective 1/1/2011.

Filed Date: 11/02/2010.

Accession Number: 20101102–5125.

Comment Date: 5 p.m. Eastern Time on Thursday, December 09, 2010.

Docket Numbers: ER11–2039–001.

Applicants: E–T Global Energy, LLC.

Description: E–T Global Energy, LLC submits Petition for Acceptance of Initial Tariff, Waivers and Blanket Authority, FERC Electric Tariff Amendment, to be effective 12/1/2010.

Filed Date: 12/01/2010.

Accession Number: 20101201–5000.

Comment Date: 5 p.m. Eastern Time on Wednesday, December 22, 2010.

Docket Numbers: ER11–2087–001.

Applicants: FC Landfill Energy, LLC.

Description: FC Landfill Energy, LLC submits tariff filing per 35: Refund Report to be effective N/A.

Filed Date: 11/30/2010.

Accession Number: 20101130–5235.

Comment Date: 5 p.m. Eastern Time on Tuesday, December 21, 2010.

Docket Numbers: ER11–2225–000.

Applicants: New England Power Pool Participants Committee.

Description: New England Power Pool Participants Committee submits tariff filing per 35.1: December 2010 Membership Filing to be effective 12/1/2010.

Filed Date: 11/30/2010.

Accession Number: 20101130–5231.

Comment Date: 5 p.m. Eastern Time on Tuesday, December 21, 2010.

Docket Numbers: ER11–2226–000.

Applicants: Westar Energy, Inc.

Description: Westar Energy, Inc. submits tariff filing per 35.12: Confirmation Letter with Kansas Electric Power Cooperative, Inc. to be effective 9/1/2010.

Filed Date: 11/30/2010.

Accession Number: 20101130–5236.

Comment Date: 5 p.m. Eastern Time on Tuesday, December 21, 2010.

Docket Numbers: ER11–2227–000.

Applicants: Ashtabula Wind, LLC.

Description: Ashtabula Wind, LLC submits tariff filing per 35.12: Ashtabula Wind, LLC and Ashtabula Wind III, LLC SFA Filing to be effective 12/1/2010.

Filed Date: 11/30/2010.

Accession Number: 20101130–5250.

Comment Date: 5 p.m. Eastern Time on Tuesday, December 21, 2010.

Docket Numbers: ER11–2228–000.

Applicants: Niagara Mohawk Power Corporation.

Description: Niagara Mohawk Power Corporation submits Supplemental Informational Filing to the 2010 Annual Update of Formula Transmission Rate Supported by Stipulation.

Filed Date: 11/18/2010.

Accession Number: 20101118–5178.

Comment Date: 5 p.m. Eastern Time on Friday, December 10, 2010.

Docket Numbers: ER11–2229–000.

Applicants: Southern California Edison Company.

Description: Southern California Edison Company submits tariff filing per 35.13(a)(2)(iii): Letter Agreement AV Solar Ranch One Project SA 92 to be effective 11/22/2010.

Filed Date: 12/01/2010.

Accession Number: 20101201–5066.

Comment Date: 5 p.m. Eastern Time on Wednesday, December 22, 2010.

Docket Numbers: ER11–2230–000.

Applicants: The United Illuminating Company.

Description: The United Illuminating Company submits tariff filing per 35.1: United Illuminating-GenConn Middletown Localized Costs Sharing Agreement to be effective 1/1/2011.

Filed Date: 12/01/2010.

Accession Number: 20101201–5067.

Comment Date: 5 p.m. Eastern Time on Wednesday, December 22, 2010.

Docket Numbers: ER11–2231–000.

Applicants: Florida Power Corporation.

Description: Florida Power Corporation submits tariff filing per 35.13(a)(2)(iii): Rate Schedule No. 199 of Florida Power Corporation to be effective 1/1/2011.

Filed Date: 12/01/2010.

Accession Number: 20101201–5076.

Comment Date: 5 p.m. Eastern Time on Friday, December 10, 2010.

Docket Numbers: ER11–2232–000.

Applicants: Public Service Company of Colorado.

Description: Public Service Company of Colorado submits tariff filing per 35: 12.1.2010_Wholesale Rate Case Compliance to be effective 7/19/2010.

Filed Date: 12/01/2010.

Accession Number: 20101201–5107.

Comment Date: 5 p.m. Eastern Time on Wednesday, December 22, 2010.

Docket Numbers: ER11–2233–000.

Applicants: Perryman Power, LLC.

Description: Perryman Power, LLC submits tariff filing per 35.15: Perryman Cancellation Filing to be effective 12/2/2010.

Filed Date: 12/01/2010.

Accession Number: 20101201–5109.

Comment Date: 5 p.m. Eastern Time on Wednesday, December 22, 2010.

Docket Numbers: ER11–2234–000.

Applicants: Lower Mount Bethel Energy, LLC.

Description: Lower Mount Bethel Energy, LLC submits Notice of Change in Status regarding Market-Based Rate Authority, to be effective 11/1/2010.

Filed Date: 12/01/2010.

Accession Number: 20101201–5110.

Comment Date: 5 p.m. Eastern Time on Wednesday, December 22, 2010.

Docket Numbers: ER11–2235–000.

Applicants: PPL Brunner Island, LLC.

Description: PPL Brunner Island, LLC submits tariff filing per 35: PPL Brunner Island, LLC's Notice of Change in Status Market-Based Rate Filing to be effective 11/1/2010.

Filed Date: 12/01/2010.

Accession Number: 20101201–5111.

Comment Date: 5 p.m. Eastern Time on Wednesday, December 22, 2010.

Docket Numbers: ER11–2236–000.

Applicants: PPL Colstrip I, LLC.

Description: PPL Colstrip I, LLC submits tariff filing per 35: PPL Colstrip I, LLC's Notice of Change in Status Market-Based Rate Filing to be effective 11/1/2010.

Filed Date: 12/01/2010.

Accession Number: 20101201–5113.

Comment Date: 5 p.m. Eastern Time on Wednesday, December 22, 2010.

Docket Numbers: ER11–2237–000.

Applicants: PPL Colstrip II, LLC.

Description: PPL Colstrip II, LLC submits tariff filing per 35: PPL Colstrip II, LLC's Notice of Change in Status Market-Based Rate Filing to be effective 11/1/2010.

Filed Date: 12/01/2010.

Accession Number: 20101201–5114.

Comment Date: 5 p.m. Eastern Time on Wednesday, December 22, 2010.

Docket Numbers: ER11–2238–000.

Applicants: PPL Electric Utilities Corporation.

Description: PPL Electric Utilities Corporation submits tariff filing per 35:

PPL Electric Utilities Corporation's Notice of Change in Status MBR Filing to be effective 11/1/2010.

Filed Date: 12/01/2010.

Accession Number: 20101201–5115.

Comment Date: 5 p.m. Eastern Time on Wednesday, December 22, 2010.

Docket Numbers: ER11–2239–000.

Applicants: PPL EnergyPlus, LLC.

Description: PPL EnergyPlus, LLC submits tariff filing per 35: PPL EnergyPlus, LLC's Notice of Change in Status Market-Based Rate Filing to be effective 11/1/2010.

Filed Date: 12/01/2010.

Accession Number: 20101201–5118.

Comment Date: 5 p.m. Eastern Time on Wednesday, December 22, 2010.

Docket Numbers: ER11–2240–000.

Applicants: PPL Great Works, LLC.

Description: PPL Great Works, LLC submits tariff filing per 35: PPL Great Works, LLC's Notice of Change in Status Market-Based Rate Filing to be effective 11/1/2010.

Filed Date: 12/01/2010.

Accession Number: 20101201–5119.

Comment Date: 5 p.m. Eastern Time on Wednesday, December 22, 2010.

Docket Numbers: ER11–2241–000.

Applicants: PPL Holtwood, LLC.

Description: PPL Holtwood, LLC submits tariff filing per 35: PPL Holtwood, LLC's Notice of Change in Status Market-Based Rate Filing to be effective 11/1/2010.

Filed Date: 12/01/2010.

Accession Number: 20101201–5120.

Comment Date: 5 p.m. Eastern Time on Wednesday, December 22, 2010.

Docket Numbers: ER11–2242–000.

Applicants: PPL Maine, LLC.

Description: PPL Maine, LLC submits tariff filing per 35: PPL Maine, LLC's Notice of Change in Status Market-Based Rate Filing to be effective 11/1/2010.

Filed Date: 12/01/2010.

Accession Number: 20101201–5122.

Comment Date: 5 p.m. Eastern Time on Wednesday, December 22, 2010.

Docket Numbers: ER11–2243–000.

Applicants: PPL Martins Creek, LLC.

Description: PPL Martins Creek, LLC submits tariff filing per 35: PPL Martins Creek, LLC's Notice of Change in Status Market-Based Rate Filing to be effective 11/1/2010.

Filed Date: 12/01/2010.

Accession Number: 20101201–5124.

Comment Date: 5 p.m. Eastern Time on Wednesday, December 22, 2010.

Docket Numbers: ER11–2244–000.

Applicants: PPL Montana, LLC.

Description: PPL Montana, LLC submits tariff filing per 35: PPL Montana, LLC's Notice of Change in Status Market-Based Rates Filing to be effective 11/1/2010.

Filed Date: 12/01/2010.

Accession Number: 20101201–5125.

Comment Date: 5 p.m. Eastern Time on Wednesday, December 22, 2010.

Docket Numbers: ER11–2245–000.

Applicants: PPL Montour, LLC.

Description: PPL Montour, LLC submits tariff filing per 35: PPL Montour, LLC's Notice of Change of Status Market-Based Rate Filing to be effective 11/1/2010.

Filed Date: 12/01/2010.

Accession Number: 20101201–5132.

Comment Date: 5 p.m. Eastern Time on Wednesday, December 22, 2010.

Docket Numbers: ER11–2246–000.

Applicants: PPL New Jersey Biogas, LLC.

Description: PPL New Jersey Biogas, LLC submits tariff filing per 35: PPL New Jersey Biogas, LLC's Notice of Change in Status Market-Based Rate Filing to be effective 11/1/2010.

Filed Date: 12/01/2010.

Accession Number: 20101201–5135.

Comment Date: 5 p.m. Eastern Time on Wednesday, December 22, 2010.

Docket Numbers: ER11–2247–000.

Applicants: PPL New Jersey Solar, LLC.

Description: PPL New Jersey Solar, LLC submits tariff filing per 35: PPL New Jersey Solar, LLC's Notice of Change in Status Market-Based Rate Filing to be effective 11/1/2010.

Filed Date: 12/01/2010.

Accession Number: 20101201–5140.

Comment Date: 5 p.m. Eastern Time on Wednesday, December 22, 2010.

Docket Numbers: ER11–2248–000.

Applicants: PPL Renewable Energy, LLC.

Description: PPL Renewable Energy, LLC submits tariff filing per 35: PPL Renewable Energy, LLC's Notice of Change in Status Market-Based Rate Filing to be effective 11/1/2010.

Filed Date: 12/01/2010.

Accession Number: 20101201–5144.

Comment Date: 5 p.m. Eastern Time on Wednesday, December 22, 2010.

Docket Numbers: ER11–2249–000.

Applicants: PPL Susquehanna, LLC.

Description: PPL Susquehanna, LLC submits tariff filing per 35: PPL Susquehanna, LLC's Notice of Change in Status Market-Based Rate Filing to be effective 11/1/2010.

Filed Date: 12/01/2010.

Accession Number: 20101201–5145.

Comment Date: 5 p.m. Eastern Time on Wednesday, December 22, 2010.

Any person desiring to intervene or to protest in any of the above proceedings must file in accordance with Rules 211 and 214 of the Commission's Rules of Practice and Procedure (18 CFR 385.211 and 385.214) on or before 5 p.m. Eastern time on the specified comment date. It is not necessary to separately intervene again in a subdocket related to a compliance filing if you have previously intervened in the same docket. Protests will be considered by the Commission in determining the appropriate action to be taken, but will not serve to make protestants parties to the proceeding. Anyone filing a motion to intervene or protest must serve a copy of that document on the Applicant. In reference to filings initiating a new proceeding, interventions or protests submitted on or before the comment deadline need not be served on persons other than the Applicant.

The Commission encourages electronic submission of protests and interventions in lieu of paper, using the FERC Online links at *http://www.ferc.gov.* To facilitate electronic service, persons with Internet access who will eFile a document and/or be listed as a contact for an intervenor must create and validate an eRegistration account using the eRegistration link. Select the eFiling link to log on and submit the intervention or protests.

Persons unable to file electronically should submit an original and 14 copies of the intervention or protest to the Federal Energy Regulatory Commission, 888 First St. NE., Washington, DC 20426.

The filings in the above proceedings are accessible in the Commission's eLibrary system by clicking on the appropriate link in the above list. They are also available for review in the Commission's Public Reference Room in Washington, DC. There is an eSubscription link on the Web site that enables subscribers to receive e-mail notification when a document is added to a subscribed dockets(s). For assistance with any FERC Online service, please e-mail *FERCOnlineSupport@ferc.gov.* or call (866) 208–3676 (toll free). For TTY, call (202) 502–8659.

Nathaniel J. Davis, Sr.,

Deputy Secretary.

[FR Doc. 2010–30937 Filed 12–8–10; 8:45 am]

BILLING CODE 6717–01–P

DEPARTMENT OF ENERGY

Federal Energy Regulatory Commission

Combined Notice of Filings

November 30, 2010.

Take notice that the Commission has received the following Natural Gas Pipeline Rate and Refund Report filings:

Docket Numbers: RP11–1543–000.
Applicants: Equitrans, L.P.
Description: Equitrans, L.P. submits tariff filing per 154.204: Equitrans' Negotiated Rate Agreement Filing to be effective 12/1/2010.
Filed Date: 11/29/2010.
Accession Number: 20101129–5086.
Comment Date: 5 p.m. Eastern Time on Monday, December 13, 2010.

Docket Numbers: RP11–1544–000.
Applicants: Tennessee Gas Pipeline Company.
Description: Tennessee Gas Pipeline 2009–2010 Cashout Report.
Filed Date: 11/29/2010.
Accession Number: 20101129–5088.
Comment Date: 5 p.m. Eastern Time on Monday, December 13, 2010.

Docket Numbers: RP11–1545–000.
Applicants: Southern Star Central Gas Pipeline, Inc.
Description: Southern Star Central Gas Pipeline, Inc. Annual Cash-Out Refund Report.
Filed Date: 11/29/2010.
Accession Number: 20101129–5090.
Comment Date: 5 p.m. Eastern Time on Monday, December 13, 2010.

Docket Numbers: RP11–1546–000.
Applicants: T.W. Phillips Pipeline Corp.
Description: T.W. Phillips Pipeline Corp. submits tariff filing per 154.203: NAESB Sup Compliance Filing to be effective 11/1/2010.
Filed Date: 11/29/2010.
Accession Number: 20101129–5119.
Comment Date: 5 p.m. Eastern Time on Monday, December 13, 2010.

Docket Numbers: RP11–1547–000.
Applicants: El Paso Natural Gas Company.
Description: El Paso Natural Gas Company submits tariff filing per 154.204: Agreement Update Filing to be effective 1/1/2011.
Filed Date: 11/29/2010.
Accession Number: 20101129–5141.
Comment Date: 5 p.m. Eastern Time on Monday, December 13, 2010.

Docket Numbers: RP11–1548–000.
Applicants: Iroquois Gas Transmission System, L.P.
Description: Iroquois Gas Transmission System, L.P. submits tariff filing per 154.204: 11/29/10 Negotiated Rates—BP Energy Co. to be effective 12/1/2010.
Filed Date: 11/29/2010.
Accession Number: 20101129–5146.
Comment Date: 5 p.m. Eastern Time on Monday, December 13, 2010.

Docket Numbers: RP11–1549–000.
Applicants: Natural Gas Pipeline Company of America LLC.
Description: Natural Gas Pipeline Company of America LLC submits tariff filing per 154.204: Non-Conforming Agreements to be effective 12/1/2010.
Filed Date: 11/29/2010.
Accession Number: 20101129–5161.
Comment Date: 5 p.m. Eastern Time on Monday, December 13, 2010.

Docket Numbers: RP11–1550–000.
Applicants: Southern Natural Gas Company.
Description: Southern Natural Gas Company submits tariff filing per 154.203: South System Expansion III Incremental Rate to be effective 1/1/2011.
Filed Date: 11/30/2010.
Accession Number: 20101130–5024.
Comment Date: 5 p.m. Eastern Time on Monday, December 13, 2010.

Docket Numbers: RP11–1551–000.
Applicants: Dominion Transmission, Inc.
Description: Dominion Transmission, Inc. submits tariff filing per 154.203: DTI—Notice of Gathering Service Termination to be effective N/A.
Filed Date: 11/30/2010.
Accession Number: 20101130–5025.
Comment Date: 5 p.m. Eastern Time on Monday, December 13, 2010.

Docket Numbers: RP11–1552–000.
Applicants: National Fuel Gas Supply Corporation.
Description: National Fuel Gas Supply Corporation submits tariff filing per 154.204: IG Rate—December 2010 to be effective 12/1/2010.
Filed Date: 11/30/2010.
Accession Number: 20101130–5027.
Comment Date: 5 p.m. Eastern Time on Monday, December 13, 2010.

Docket Numbers: RP11–1553–000.
Applicants: Trunkline Gas Company, LLC.
Description: Trunkline Gas Company, LLC submits tariff filing per 154.204: Negotiated Rates Filing—3 to be effective 12/1/2010.
Filed Date: 11/30/2010.
Accession Number: 20101130–5028.
Comment Date: 5 p.m. Eastern Time on Monday, December 13, 2010.

Docket Numbers: RP11–1554–000.
Applicants: Transcontinental Gas Pipe Line Company, LLC.
Description: Transcontinental Gas Pipe Line Company, LLC submits tariff filing per 154.403: S–2 Tracker Filing Effective 12–01–2010 to be effective 12/1/2010.
Filed Date: 11/30/2010.
Accession Number: 20101130–5029.
Comment Date: 5 p.m. Eastern Time on Monday, December 13, 2010.

Docket Numbers: RP11–1555–000.
Applicants: National Fuel Gas Supply Corporation.
Description: National Fuel Gas Supply Corporation submits tariff filing per 154.403: TSCA for 2011 to be effective 1/1/2011.
Filed Date: 11/30/2010.
Accession Number: 20101130–5047.
Comment Date: 5 p.m. Eastern Time on Monday, December 13, 2010.

Docket Numbers: RP11–1556–000.
Applicants: Western Gas Interstate Company.
Description: Western Gas Interstate Company submits tariff filing per 154.203: Western Gas Interstate Company Compliance Filing, Order No. 587–U to be effective 11/30/2010.
Filed Date: 11/30/2010.
Accession Number: 20101130–5048.
Comment Date: 5 p.m. Eastern Time on Monday, December 13, 2010.

Docket Numbers: CP11–34–000.
Applicants: Golden Pass Pipeline LLC.
Description: Application of Golden Pass Pipeline LLC to amend the certificate of public convenience and necessity.
Filed Date: 11/16/2010.
Accession Number: 20101116–5046.
Comment Date: 5 p.m. Eastern Time on Monday, December 13, 2010.

Any person desiring to intervene or to protest in any of the above proceedings must file in accordance with Rules 211 and 214 of the Commission's Rules of Practice and Procedure (18 CFR 385.211 and 385.214) on or before 5 p.m. Eastern time on the specified comment date. It is not necessary to separately intervene again in a subdocket related to a compliance filing if you have previously intervened in the same docket. Protests will be considered by the Commission in determining the appropriate action to be taken, but will not serve to make protestants parties to the proceeding. Anyone filing a motion to intervene or protest must serve a copy of that document on the Applicant. In reference to filings initiating a new proceeding, interventions or protests submitted on or before the comment deadline need not be served on persons other than the Applicant.

The Commission encourages electronic submission of protests and interventions in lieu of paper, using the FERC Online links at *http://*

www.ferc.gov. To facilitate electronic service, persons with Internet access who will eFile a document and/or be listed as a contact for an intervenor must create and validate an eRegistration account using the eRegistration link. Select the eFiling link to log on and submit the intervention or protests.

Persons unable to file electronically should submit an original and 14 copies of the intervention or protest to the Federal Energy Regulatory Commission, 888 First St. NE., Washington, DC 20426.

The filings in the above proceedings are accessible in the Commission's eLibrary system by clicking on the appropriate link in the above list. They are also available for review in the Commission's Public Reference Room in Washington, DC. There is an eSubscription link on the Web site that enables subscribers to receive e-mail notification when a document is added to a subscribed dockets(s). For assistance with any FERC Online service, please e-mail *FERCOnlineSupport@ferc.gov.* or call (866) 208–3676 (toll free). For TTY, call (202) 502–8659.

Nathaniel J. Davis, Sr.,

Deputy Secretary.

[FR Doc. 2010–30925 Filed 12–8–10; 8:45 am]

BILLING CODE 6717–01–P

DEPARTMENT OF ENERGY

Federal Energy Regulatory Commission

Combined Notice of Filings

December 1, 2010.

Take notice that the Commission has received the following Natural Gas Pipeline Rate and Refund Report filings:

Docket Numbers: RP11–1557–000.
Applicants: Rockies Express Pipeline LLC.
Description: Rockies Express Pipeline LLC submits tariff filing per 154.204: Negotiated Rate 2010–11–30 BP to be effective 12/1/2010.
Filed Date: 11/30/2010.
Accession Number: 20101130–5090.
Comment Date: 5 p.m. Eastern Time on Monday, December 13, 2010.

Docket Numbers: RP11–1558–000.
Applicants: PostRock KPC Pipeline, LLC.
Description: 2010 Annual Interruptible Revenue Crediting Report of PostRock KPC Pipeline, LLC.
Filed Date: 11/30/2010.
Accession Number: 20101130–5140.
Comment Date: 5 p.m. Eastern Time on Monday, December 13, 2010.

Docket Numbers: RP11–1559–000.
Applicants: Southern Natural Gas Company.
Description: Annual SCRM Report of Southern Natural Gas Company.
Filed Date: 11/30/2010.
Accession Number: 20101130–5147.
Comment Date: 5 p.m. Eastern Time on Monday, December 13, 2010.

Docket Numbers: RP11–1560–000.
Applicants: Northern Natural Gas Company.
Description: Northern Natural Gas Company submits tariff filing per 154.204: 20101130 Golden Spread Non-conforming to be effective 1/1/2011.
Filed Date: 11/30/2010.
Accession Number: 20101130–5175.
Comment Date: 5 p.m. Eastern Time on Monday, December 13, 2010.

Docket Numbers: RP11–1561–000.
Applicants: Southern Star Central Gas Pipeline, Inc.
Description: Southern Star Central Gas Pipeline, Inc. Annual OFO Refund Report.
Filed Date: 11/30/2010.
Accession Number: 20101130–5182.
Comment Date: 5 p.m. Eastern Time on Monday, December 13, 2010.

Docket Numbers: RP11–1562–000.
Applicants: El Paso Natural Gas Company.
Description: El Paso Natural Gas Company submits tariff filing per 154.403: 11.2 Inflation Adjustment Rates to be effective 1/1/2011.
Filed Date: 11/30/2010.
Accession Number: 20101130–5186.
Comment Date: 5 p.m. Eastern Time on Monday, December 13, 2010.

Docket Numbers: RP11–1563–000.
Applicants: National Fuel Gas Supply Corporation.
Description: National Fuel Gas Supply Corporation submits tariff filing per 154.403: FG Rate for 2011 to be effective 1/1/2011.
Filed Date: 11/30/2010.
Accession Number: 20101130–5191.
Comment Date: 5 p.m. Eastern Time on Monday, December 13, 2010.

Docket Numbers: RP11–1564–000.
Applicants: Mojave Pipeline Company, LLC.
Description: Mojave Pipeline Company, LLC submits tariff filing per 154.403(d)(2): Annual FL&U Filing to be effective 1/1/2011.
Filed Date: 11/30/2010.
Accession Number: 20101130–5203.
Comment Date: 5 p.m. Eastern Time on Monday, December 13, 2010.

Docket Numbers: RP11–1565–000.
Applicants: Discovery Gas Transmission LLC.
Description: Discovery Gas Transmission LLC submits tariff filing per 154.204: Reserve Dedication Provision to be effective 1/1/2011.
Filed Date: 11/30/2010.
Accession Number: 20101130–5204.
Comment Date: 5 p.m. Eastern Time on Monday, December 13, 2010.

Docket Numbers: RP11–1566–000.
Applicants: Tennessee Gas Pipeline Company.
Description: Tennessee Gas Pipeline Company submits tariff filing per 154.312: Rate Case 2011 to be effective 1/1/2011.
Filed Date: 11/30/2010.
Accession Number: 20101130–5217.
Comment Date: 5 p.m. Eastern Time on Monday, December 13, 2010.

Docket Numbers: RP11–1567–000.
Applicants: Granite State Gas Transmission, Inc.
Description: Granite State Gas Transmission, Inc. submits tariff filing per 154.204: Motion to Place Settlement Rates into Effect to be effective 1/1/2011.
Filed Date: 11/30/2010.
Accession Number: 20101130–5226.
Comment Date: 5 p.m. Eastern Time on Friday, December 10, 2010.

Docket Numbers: RP11–1568–000.
Applicants: Northern Natural Gas Company.
Description: Northern Natural Gas Company submits tariff filing per 154.204: 20101130 Negotiated Rate to be effective 12/1/2010.
Filed Date: 11/30/2010.
Accession Number: 20101130–5230.
Comment Date: 5 p.m. Eastern Time on Monday, December 13, 2010.

Docket Numbers: RP11–1569–000.
Applicants: Gulf South Pipeline Company, LP.
Description: Gulf South Pipeline Company, LP submits tariff filing per 154.204: HK to Texla Capacity Release Negotiated Rate to be effective 12/1/2010.
Filed Date: 11/30/2010.
Accession Number: 20101130–5232.
Comment Date: 5 p.m. Eastern Time on Monday, December 13, 2010.

Docket Numbers: RP11–1570–000.
Applicants: Dominion Transmission, Inc.
Description: Dominion Transmission, Inc. submits tariff filing per 154.204: DTI—Negotiated Rate Filing—Snyder and Sprague to be effective 12/1/2010.
Filed Date: 11/30/2010.
Accession Number: 20101130–5234.
Comment Date: 5 p.m. Eastern Time on Monday, December 13, 2010.

Docket Numbers: RP11–1571–000.
Applicants: Eastern Shore Natural Gas Company.
Description: Eastern Shore Natural Gas Company submits Sheet No. 94,

GTC Section 1, Definitions, Continued, 0.0.2, System Map, System Map, 0.0.2, FERC Gas Tariff, Third Revised Volume No 1, for TETCO Project, to be effective 1/1/2011.

Filed Date: 12/01/2010.

Accession Number: 20101201–5001.

Comment Date: 5 p.m. Eastern Time on Monday, December 13, 2010.

Docket Numbers: RP11–1572–000.

Applicants: Gas Transmission Northwest Corporation.

Description: Gas Transmission Northwest Corporation Annual Fuel Charge Adjustment.

Filed Date: 11/30/2010.

Accession Number: 20101130–5317.

Comment Date: 5 p.m. Eastern Time on Monday, December 13, 2010.

Docket Numbers: RP11–1573–000.

Applicants: Colorado Interstate Gas Company.

Description: Quarterly Lost, Unaccounted For and Other Fuel Gas Reimbursement Percentage (FL&U) of Colorado Interstate Gas Company.

Filed Date: 11/30/2010.

Accession Number: 20101130–5321.

Comment Date: 5 p.m. Eastern Time on Monday, December 13, 2010.

Docket Numbers: RP11–1574–000.

Applicants: Sea Robin Pipeline Company, LLC.

Description: Sea Robin Pipeline Company, LLC submits tariff filing per 154.204: Revise fuel percentage to be effective 1/1/2011.

Filed Date: 12/01/2010.

Accession Number: 20101201–5043.

Comment Date: 5 p.m. Eastern Time on Monday, December 13, 2010.

Any person desiring to intervene or to protest in any of the above proceedings must file in accordance with Rules 211 and 214 of the Commission's Rules of Practice and Procedure (18 CFR 385.211 and 385.214) on or before 5 p.m. Eastern time on the specified comment date. It is not necessary to separately intervene again in a subdocket related to a compliance filing if you have previously intervened in the same docket. Protests will be considered by the Commission in determining the appropriate action to be taken, but will not serve to make protestants parties to the proceeding. Anyone filing a motion to intervene or protest must serve a copy of that document on the Applicant. In reference to filings initiating a new proceeding, interventions or protests submitted on or before the comment deadline need not be served on persons other than the Applicant.

The Commission encourages electronic submission of protests and interventions in lieu of paper, using the FERC Online links at *http://www.ferc.gov.* To facilitate electronic service, persons with Internet access who will eFile a document and/or be listed as a contact for an intervenor must create and validate an eRegistration account using the eRegistration link. Select the eFiling link to log on and submit the intervention or protests.

Persons unable to file electronically should submit an original and 14 copies of the intervention or protest to the Federal Energy Regulatory Commission, 888 First St., NE., Washington, DC 20426.

The filings in the above proceedings are accessible in the Commission's eLibrary system by clicking on the appropriate link in the above list. They are also available for review in the Commission's Public Reference Room in Washington, DC. There is an eSubscription link on the Web site that enables subscribers to receive e-mail notification when a document is added to a subscribed docket(s). For assistance with any FERC Online service, please e-mail *FERCOnlineSupport@ferc.gov* or call (866) 208–3676 (toll free). For TTY, call (202) 502–8659.

Nathaniel J. Davis, Sr.,

Deputy Secretary.

[FR Doc. 2010–30926 Filed 12–8–10; 8:45 am]

BILLING CODE 6717–01–P

DEPARTMENT OF ENERGY

Federal Energy Regulatory Commission

Combined Notice of Filings No. 2

November 23, 2010.

Take notice that the Commission has received the following Natural Gas Pipeline Rate and Refund Report filings:

Docket Numbers: RP11–61–001.

Applicants: Colorado Interstate Gas Company.

Description: Colorado Interstate Gas Company submits tariff filing per 154.203: Latigo Compliance with NAESB to be effective 11/1/2010.

Filed Date: 11/17/2010.

Accession Number: 20101117–5197.

Comment Date: 5 p.m. Eastern Time on Monday, November 29, 2010.

Docket Numbers: RP10–911–001.

Applicants: Gas Transmission Northwest Corporation.

Description: Gas Transmission Northwest Corporation submits tariff filing per 154.203: RP10–911 Compliance to be effective 6/30/2010.

Filed Date: 11/23/2010.

Accession Number: 20101123–5024.

Comment Date: 5 p.m. Eastern Time on Monday, December 06, 2010.

Docket Numbers: RP10–1351–001.

Applicants: Hampshire Gas Company.

Description: Hampshire Gas Company submits tariff filing per 154.203: Compliance Filing of Hampshire Gas Company to be effective 9/28/2010.

Filed Date: 11/22/2010.

Accession Number: 20101122–5103.

Comment Date: 5 p.m. Eastern Time on Monday, December 06, 2010.

Any person desiring to protest this filing must file in accordance with Rule 211 of the Commission's Rules of Practice and Procedure (18 CFR 385.211). Protests to this filing will be considered by the Commission in determining the appropriate action to be taken, but will not serve to make protestants parties to the proceeding. Such protests must be filed on or before 5 p.m. Eastern time on the specified comment date. Anyone filing a protest must serve a copy of that document on all the parties to the proceeding.

The Commission encourages electronic submission of protests in lieu of paper using the "eFiling" link at *http://www.ferc.gov.* Persons unable to file electronically should submit an original and 14 copies of the protest to the Federal Energy Regulatory Commission, 888 First Street, NE., Washington, DC 20426.

This filing is accessible on-line at *http://www.ferc.gov,* using the "eLibrary" link and is available for review in the Commission's Public Reference Room in Washington, DC. There is an "eSubscription" link on the Web site that enables subscribers to receive e-mail notification when a document is added to a subscribed docket(s). For assistance with any FERC Online service, please e-mail *FERCOnlineSupport@ferc.gov,* or call (866) 208–3676 (toll free). For TTY, call (202) 502–8659.

Nathaniel J. Davis, Sr.,

Deputy Secretary.

[FR Doc. 2010–30924 Filed 12–8–10; 8:45 am]

BILLING CODE 6717–01–P

DEPARTMENT OF ENERGY

Federal Energy Regulatory Commission

Combined Notice of Filings No. 1

November 30, 2010.

Take notice that the Commission received the following electric corporate filings:

Docket Numbers: EC11–19–000.

Applicants: Exeter Energy Limited Partnership, ReEnergy Sterling LLC.

Description: Supplemental Information of ReEnergy Sterling LLC.

Filed Date: 11/30/2010.
Accession Number: 20101130–5139.
Comment Date: 5 p.m. Eastern Time on Friday, December 10, 2010.

Docket Numbers: EC11–27–000.
Applicants: Wolverine Creek Goshen Interconnection, Diamond Generating Corporation, Ridgeline Alternative Energy LLC, Goshen Phase II LLC, Goshen Phase II Holdings LLC, Goshen Wind Holdings LLC.
Description: Joint Application for Authorization of Transaction Pursuant to Section 203 and Request for Confidential Treatment of Transaction Document, Expedited Consideration, and Waivers of Ridgeline Alternative Energy LLC *et al.*
Filed Date: 11/30/2010.
Accession Number: 20101130–5137.
Comment Date: 5 p.m. Eastern Time on Tuesday, December 21, 2010.

Take notice that the Commission received the following electric rate filings:

Docket Numbers: ER05–644–011.
Applicants: PSEG Energy Resources & Trade LLC.
Description: PSEG Energy Resources & Trade LLC submits, as an information filing, a list of planned Project Investments and projected Project Investment costs for calendar year 2011.
Filed Date: 10/01/2010.
Accession Number: 20101001–5262.
Comment Date: 5 p.m. Eastern Time on Friday, December 10, 2010

Docket Numbers: ER05–644–011.
Applicants: PSEG Energy Resources & Trade LLC.
Description: Notice of Amendment and Partial Withdrawal of the Informational Filing of PSEG Energy Resources & Trade LLC and PSEG Fossil LLC.
Filed Date: 11/15/2010.
Accession Number: 20101115–5204.
Comment Date: 5 p.m. Eastern Time on Friday, December 10, 2010.

Docket Numbers: ER10–2639–001; ER11–2200–001.
Applicants: Noble Americas Gas and Power Corp., Noble Americas Energy Solutions LLC.
Description: Notice of Change in Status of Noble Americas Energy Solutions LLC, *et. al.*
Filed Date: 11/30/2010.
Accession Number: 20101130–5167.
Comment Date: 5 p.m. Eastern Time on Tuesday, December 21, 2010.

Docket Numbers: ER11–2198–000.
Applicants: Southwest Power Pool, Inc.
Description: Southwest Power Pool, Inc. submits tariff filing per 35.13(a)(2)(iii): Formula Update—AEP Transco to be effective 7/26/2010.
Filed Date: 11/29/2010.
Accession Number: 20101129–5124.
Comment Date: 5 p.m. Eastern Time on Monday, December 20, 2010.

Docket Numbers: ER11–2199–000.
Applicants: New York Independent System Operator, Inc.
Description: New York Independent System Operator, Inc. submits tariff filing per 35.13(a)(2)(iii): 205 Filing—LGIA among the NYISO, Con Edison and Bayonne Energy Center to be effective 11/10/2010.
Filed Date: 11/29/2010.
Accession Number: 20101129–5125.
Comment Date: 5 p.m. Eastern Time on Monday, December 20, 2010.

Docket Numbers: ER11–2200–000.
Applicants: Sempra Energy Solutions LLC.
Description: Sempra Energy Solutions LLC submits tariff filing per 35.13(a)(2)(iii): Noble Americas Energy Solutions LLC succession to be effective 11/1/2010.
Filed Date: 11/29/2010.
Accession Number: 20101129–5127.
Comment Date: 5 p.m. Eastern Time on Monday, December 20, 2010.

Docket Numbers: ER11–2201–000.
Applicants: Evergreen Wind Power III, LLC.
Description: Evergreen Wind Power III, LLC submits tariff filing per 35.12: MBR Application of Evergreen Wind Power III, LLC to be effective 7/1/2011.
Filed Date: 11/29/2010.
Accession Number: 20101129–5155.
Comment Date: 5 p.m. Eastern Time on Monday, December 20, 2010.

Docket Numbers: ER11–2202–000.
Applicants: Florida Power & Light Company.
Description: Florida Power & Light Company submits an Interconnection Agreement No. 285 with Wheelabrator North Broward Inc, to be effective 1/1/2011.
Filed Date: 11/30/2010.
Accession Number: 20101130–5002.
Comment Date: 5 p.m. Eastern Time on Tuesday, December 21, 2010.

Docket Numbers: ER11–2203–000.
Applicants: Allegheny Energy Supply Company LLC.
Description: Allegheny Energy Supply Company, LLC submits request for authorization to make wholesale power sales to its affiliate, Pennsylvania Electric Company.
Filed Date: 11/29/2010.
Accession Number: 20101130–0201.
Comment Date: 5 p.m. Eastern Time on Monday, December 20, 2010.

Docket Numbers: ER11–2204–000.
Applicants: Southern California Edison Company.
Description: Southern California Edison Company submits tariff filing per 35.13(a)(2)(iii): LGIA Mojave Solar Project SA 94 to be effective 1/30/2011.
Filed Date: 11/30/2010.
Accession Number: 20101130–5032.
Comment Date: 5 p.m. Eastern Time on Tuesday, December 21, 2010.

Docket Numbers: ER11–2205–000.
Applicants: Southwest Power Pool, Inc.
Description: Southwest Power Pool, Inc. submits tariff filing per 35.13(a)(2)(iii): Formula Update—LES & OPPD to be effective 8/1/2010.
Filed Date: 11/30/2010.
Accession Number: 20101130–5035.
Comment Date: 5 p.m. Eastern Time on Tuesday, December 21, 2010.

Docket Numbers: ER11–2206–000.
Applicants: Alta Wind V, LLC.
Description: Alta Wind V, LLC submits tariff filing per 35.1: Alta Wind V, LLC MBR Tariff to be effective 10/30/2010.
Filed Date: 11/30/2010.
Accession Number: 20101130–5045.
Comment Date: 5 p.m. Eastern Time on Tuesday, December 21, 2010.

Docket Numbers: ER11–2207–000.
Applicants: Alta Wind IV, LLC.
Description: Alta Wind IV, LLC submits tariff filing per 35.1: Alta Wind IV, LLC MBR Tariff to be effective 10/30/2010.
Filed Date: 11/30/2010.
Accession Number: 20101130–5046.
Comment Date: 5 p.m. Eastern Time on Tuesday, December 21, 2010.

Docket Numbers: ER11–2208–000.
Applicants: Midwest Independent Transmission System Operator, Inc.
Description: Midwest Independent Transmission System Operator, Inc. submits tariff filing per 35.13(a)(2)(iii): Ameren-Dynegy DFA to be effective 11/1/2010.
Filed Date: 11/30/2010.
Accession Number: 20101130–5049.
Comment Date: 5 p.m. Eastern Time on Tuesday, December 21, 2010.

Docket Numbers: ER11–2209–000.
Applicants: Alta Wind II, LLC.
Description: Alta Wind II, LLC submits tariff filing per 35.1: Alta Wind II, LLC MBR Tariff to be effective 10/30/2010.
Filed Date: 11/30/2010.
Accession Number: 20101130–5055.
Comment Date: 5 p.m. Eastern Time on Tuesday, December 21, 2010.

Docket Numbers: ER11–2210–000.
Applicants: Alta Wind III, LLC.
Description: Alta Wind III, LLC submits tariff filing per 35.1: Alta Wind III, LLC MBR Tariff to be effective 10/30/2010.

Filed Date: 11/30/2010.
Accession Number: 20101130–5057.
Comment Date: 5 p.m. Eastern Time on Tuesday, December 21, 2010.

Docket Numbers: ER11–2211–000.
Applicants: Alta Wind I, LLC.
Description: Alta Wind I, LLC submits tariff filing per 35.1: Alta Wind I, LLC MBR Tariff to be effective 8/30/2010.
Filed Date: 11/30/2010.
Accession Number: 20101130–5058.
Comment Date: 5 p.m. Eastern Time on Tuesday, December 21, 2010.

Docket Numbers: ER11–2212–000.
Applicants: Oak Creek Wind Power, LLC.
Description: Oak Creek Wind Power, LLC submits tariff filing per 35.15: Ridge Crest Wind Partners, LLC Cancellation of MBR Tariff to be effective 9/30/2010.
Filed Date: 11/30/2010.
Accession Number: 20101130–5086.
Comment Date: 5 p.m. Eastern Time on Tuesday, December 21, 2010.

Docket Numbers: ER11–2213–000.
Applicants: Ridge Crest Wind Partners, LLC.
Description: Ridge Crest Wind Partners, LLC submits tariff filing per 35.1: Ridge Crest Wind Partners, LLC MBR Tariff to be effective 9/30/2010.
Filed Date: 11/30/2010.
Accession Number: 20101130–5088.
Comment Date: 5 p.m. Eastern Time on Tuesday, December 21, 2010.

Docket Numbers: ER11–2214–000.
Applicants: Sky River LLC.
Description: Sky River LLC submits tariff filing per 35.12: Sky River LLC and Windstar Energy, LLC Common Facilities Agreement Filing to be effective 2/1/2011.
Filed Date: 11/30/2010.
Accession Number: 20101130–5121.
Comment Date: 5 p.m. Eastern Time on Tuesday, December 21, 2010.

Docket Numbers: ER11–2215–000.
Applicants: PJM Interconnection, L.L.C., Commonwealth Edison Company.
Description: PJM Interconnection, L.L.C. submits tariff filing per 35: ComEd submits Attachment M–2 to PJM's Tariff per Order in Docket No. ER10–2545 to be effective 11/2/2010.
Filed Date: 11/30/2010.
Accession Number: 20101130–5125.
Comment Date: 5 p.m. Eastern Time on Tuesday, December 21, 2010.

Docket Numbers: ER11–2216–000.
Applicants: ISO New England Inc.
Description: ISO New England Inc. submits tariff filing per 35.13(a)(2)(iii): Interconnection Value Services to be effective 1/31/2011.
Filed Date: 11/30/2010.
Accession Number: 20101130–5136.
Comment Date: 5 p.m. Eastern Time on Tuesday, December 21, 2010.

Docket Numbers: ER11–2217–000.
Applicants: New York Independent System Operator, Inc.
Description: New York Independent System Operator, Inc. submits tariff filing per 35.13(a)(2)(iii): 205 Filing—Locational Based Marginal Pricing Calculation to be effective 1/31/2011.
Filed Date: 11/30/2010.
Accession Number: 20101130–5142.
Comment Date: 5 p.m. Eastern Time on Tuesday, December 21, 2010.

Docket Numbers: ER11–2218–000.
Applicants: Mirant Potrero, LLC.
Description: Mirant Potrero, LLC submits tariff filing per 35.13(a)(2)(iii): Submittal of Revisions to Must Run Service Agreement & Unplanned Repair Notices to be effective 1/1/2011.
Filed Date: 11/30/2010.
Accession Number: 20101130–5145.
Comment Date: 5 p.m. Eastern Time on Tuesday, December 21, 2010.

Docket Numbers: ER11–2219–000.
Applicants: Southern California Edison Company.
Description: Southern California Edison submits cancellation of letter agreement with City of Riverside, SA 237.
Filed Date: 11/30/2010.
Accession Number: 20101130–5146.
Comment Date: 5 p.m. Eastern Time on Tuesday, December 21, 2010.

Docket Numbers: ER11–2220–000.
Applicants: Southwest Power Pool, Inc.
Description: Southwest Power Pool, Inc. submits tariff filing per 35.13(a)(2)(iii): Formula Update—GRDA to be effective 8/1/2010.
Filed Date: 11/30/2010.
Accession Number: 20101130–5168.
Comment Date: 5 p.m. Eastern Time on Tuesday, December 21, 2010.

Docket Numbers: ER11–2221–000.
Applicants: Pacific Gas and Electric Company.
Description: Pacific Gas and Electric Company submits tariff filing per 35.13(a)(2)(i): Hercules Municipal Utility Transmission Agreements to be effective 1/31/2011.
Filed Date: 11/30/2010.
Accession Number: 20101130–5174.
Comment Date: 5 p.m. Eastern Time on Tuesday, December 21, 2010.

Docket Numbers: ER11–2222–000.
Applicants: West Penn Power Company.
Description: West Penn Power Company submits tariff filing per 35.15: West Penn Cancellation of Tariff Record to be effective 11/30/2010.
Filed Date: 11/30/2010.
Accession Number: 20101130–5208.
Comment Date: 5 p.m. Eastern Time on Tuesday, December 21, 2010.

Docket Numbers: ER11–2223–000.
Applicants: The Potomac Edison Company.
Description: The Potomac Edison Company submits tariff filing per 35.15: Potomac Edison Cancellation of tariff record to be effective 11/30/2010.
Filed Date: 11/30/2010.
Accession Number: 20101130–5211.
Comment Date: 5 p.m. Eastern Time on Tuesday, December 21, 2010.

Docket Numbers: ER11–2224–000.
Applicants: New York Independent System Operator, Inc.
Description: New York Independent System Operator, Inc. submits tariff filing per 35.13(a)(2)(iii): 205 Filing to Implement Revised ICAP Demand Curves to be effective 1/28/2011.
Filed Date: 11/30/2010.
Accession Number: 20101130–5229.
Comment Date: 5 p.m. Eastern Time on Tuesday, December 21, 2010.

Any person desiring to intervene or to protest in any of the above proceedings must file in accordance with Rules 211 and 214 of the Commission's Rules of Practice and Procedure (18 CFR 385.211 and 385.214) on or before 5 p.m. Eastern time on the specified comment date. It is not necessary to separately intervene again in a subdocket related to a compliance filing if you have previously intervened in the same docket. Protests will be considered by the Commission in determining the appropriate action to be taken, but will not serve to make protestants parties to the proceeding. Anyone filing a motion to intervene or protest must serve a copy of that document on the Applicant. In reference to filings initiating a new proceeding, interventions or protests submitted on or before the comment deadline need not be served on persons other than the Applicant.

As it relates to any qualifying facility filings, the notices of self-certification [or self-recertification] listed above, do not institute a proceeding regarding qualifying facility status. A notice of self-certification [or self-recertification] simply provides notification that the entity making the filing has determined the facility named in the notice meets the applicable criteria to be a qualifying facility. Intervention and/or protest do not lie in dockets that are qualifying facility self-certifications or self-recertifications. Any person seeking to challenge such qualifying facility status may do so by filing a motion pursuant to 18 CFR 292.207(d)(iii). Intervention and protests may be filed in response to

notices of qualifying facility dockets other than self-certifications and self-recertifications.

The Commission encourages electronic submission of protests and interventions in lieu of paper, using the FERC Online links at *http://www.ferc.gov.* To facilitate electronic service, persons with Internet access who will eFile a document and/or be listed as a contact for an intervenor must create and validate an eRegistration account using the eRegistration link. Select the eFiling link to log on and submit the intervention or protests.

Persons unable to file electronically should submit an original and 14 copies of the intervention or protest to the Federal Energy Regulatory Commission, 888 First St., NE., Washington, DC 20426.

The filings in the above proceedings are accessible in the Commission's eLibrary system by clicking on the appropriate link in the above list. They are also available for review in the Commission's Public Reference Room in Washington, DC. There is an eSubscription link on the Web site that enables subscribers to receive e-mail notification when a document is added to a subscribed dockets(s). For assistance with any FERC Online service, please e-mail *FERCOnlineSupport@ferc.gov.* or call (866) 208–3676 (toll free). For TTY, call (202) 502–8659.

Nathaniel J. Davis, Sr.,

Deputy Secretary.

[FR Doc. 2010–30922 Filed 12–8–10; 8:45 am]

BILLING CODE 6717–01–P

DEPARTMENT OF ENERGY

Federal Energy Regulatory Commission

Combined Notice of Filings No. 1

November 29, 2010.

Take notice that the Commission received the following electric rate filings:

Docket Numbers: ER10–1901–003.
Applicants: Upper Peninsula Power Company.
Description: Upper Peninsula Power Company submits tariff filing per 35: Compliance Filing of Concurrence for Joint Ancillary Services Tariff with WPSC to be effective 7/23/2010.
Filed Date: 11/24/2010.
Accession Number: 20101124–5111.
Comment Date: 5 p.m. Eastern Time on Wednesday, December 15, 2010.

Docket Numbers: ER10–1901–004.
Applicants: Upper Peninsula Power Company.
Description: Upper Peninsula Power Company submits tariff filing per 35: Compliance Filing of Concurrence for Open Access Transmission Tariff with WPSC to be effective 7/30/2010.
Filed Date: 11/24/2010.
Accession Number: 20101124–5119.
Comment Date: 5 p.m. Eastern Time on Wednesday, December 15, 2010.

Docket Numbers: ER10–2113–001.
Applicants: Cleco Power LLC.
Description: Cleco Power LLC submits tariff filing per 35: Compliance Filing for RS10 to be effective 8/3/2010.
Filed Date: 11/16/2010.
Accession Number: 20101116–5149.
Comment Date: 5 p.m. Eastern Time on Tuesday, December 07, 2010.

Docket Numbers: ER10–2710–006.
Applicants: PJM Interconnection, L.L.C.
Description: PJM Interconnection, L.L.C. submits an Operating Agreement and RAA Errata Filing for technical corrections, to be effective 9/17/2010.
Filed Date: 11/29/2010.
Accession Number: 20101129–5000.
Comment Date: 5 p.m. Eastern Time on Thursday, December 09, 2010.

Docket Numbers: ER11–19–001.
Applicants: WSPP Inc.
Description: WSPP Inc. submits tariff filing per 35.17(b): Amendment to Revisions in the WSPP Agreement in Docket No. ER11–19 to be effective 10/1/2010.
Filed Date: 11/29/2010.
Accession Number: 20101129–5116.
Comment Date: 5 p.m. Eastern Time on Monday, December 20, 2010.

Docket Numbers: ER11–2193–000.
Applicants: The Detroit Edison Company.
Description: The Detroit Edison Company submits tariff filing per 35.12: The City of Detroit WPS–2 Service Agreement to be effective 5/17/2010.
Filed Date: 11/29/2010.
Accession Number: 20101129–5012.
Comment Date: 5 p.m. Eastern Time on Monday, December 20, 2010.

Docket Numbers: ER11–2194–000.
Applicants: Southwest Power Pool, Inc., American Electric Power Service Corporation.
Description: Southwest Power Pool, Inc. submits tariff filing per 35.13(a)(2)(iii): Formula Update—AEP to be effective 7/26/2010.
Filed Date: 11/29/2010.
Accession Number: 20101129–5053.
Comment Date: 5 p.m. Eastern Time on Monday, December 20, 2010.

Docket Numbers: ER11–2195–000.
Applicants: Midwest Independent Transmission System.
Description: Midwest Independent Transmission System Operator, Inc. submits tariff filing per 35.13(a)(2)(iii): R23 MidAm-Iberdrola LGIA to be effective 8/25/2010.
Filed Date: 11/29/2010.
Accession Number: 20101129–5084.
Comment Date: 5 p.m. Eastern Time on Monday, December 20, 2010.

Docket Numbers: ER11–2196–000.
Applicants: San Luis Solar LLC.
Description: San Luis Solar LLC submits tariff filing per 35.12: Initial Market Based Rate Application to be effective 1/28/2011.
Filed Date: 11/29/2010.
Accession Number: 20101129–5089.
Comment Date: 5 p.m. Eastern Time on Monday, December 20, 2010.

Docket Numbers: ER11–2197–000.
Applicants: Ameren Illinois Company.
Description: Ameren Illinois Company submits tariff filing per 35.13(a)(2)(iii): Amendment K to Legacy Service Agreements to be effective 12/31/9998.
Filed Date: 11/29/2010.
Accession Number: 20101129–5096.
Comment Date: 5 p.m. Eastern Time on Monday, December 20, 2010.

Any person desiring to intervene or to protest in any of the above proceedings must file in accordance with Rules 211 and 214 of the Commission's Rules of Practice and Procedure (18 CFR 385.211 and 385.214) on or before 5 p.m. Eastern time on the specified comment date. It is not necessary to separately intervene again in a subdocket related to a compliance filing if you have previously intervened in the same docket. Protests will be considered by the Commission in determining the appropriate action to be taken, but will not serve to make protestants parties to the proceeding. Anyone filing a motion to intervene or protest must serve a copy of that document on the Applicant. In reference to filings initiating a new proceeding, interventions or protests submitted on or before the comment deadline need not be served on persons other than the Applicant.

As it relates to any qualifying facility filings, the notices of self-certification [or self-recertification] listed above, do not institute a proceeding regarding qualifying facility status. A notice of self-certification [or self-recertification] simply provides notification that the entity making the filing has determined the facility named in the notice meets the applicable criteria to be a qualifying facility. Intervention and/or protest do not lie in dockets that are qualifying facility self-certifications or self-recertifications. Any person seeking to

challenge such qualifying facility status may do so by filing a motion pursuant to 18 CFR 292.207(d)(iii). Intervention and protests may be filed in response to notices of qualifying facility dockets other than self-certifications and self-recertifications.

The Commission encourages electronic submission of protests and interventions in lieu of paper, using the FERC Online links at *http://www.ferc.gov.* To facilitate electronic service, persons with Internet access who will eFile a document and/or be listed as a contact for an intervenor must create and validate an eRegistration account using the eRegistration link. Select the eFiling link to log on and submit the intervention or protests.

Persons unable to file electronically should submit an original and 14 copies of the intervention or protest to the Federal Energy Regulatory Commission, 888 First St., NE., Washington, DC 20426.

The filings in the above proceedings are accessible in the Commission's eLibrary system by clicking on the appropriate link in the above list. They are also available for review in the Commission's Public Reference Room in Washington, DC. There is an eSubscription link on the Web site that enables subscribers to receive e-mail notification when a document is added to a subscribed docket(s). For assistance with any FERC Online service, please e-mail *FERCOnlineSupport@ferc.gov.* or call (866) 208–3676 (toll free). For TTY, call (202) 502–8659.

Nathaniel J. Davis, Sr.,

Deputy Secretary.

[FR Doc. 2010–30921 Filed 12–8–10; 8:45 am]

BILLING CODE 6717–01–P

DEPARTMENT OF ENERGY

Federal Energy Regulatory Commission

Combined Notice of Filings No. 1

November 26, 2010.

Take notice that the Commission received the following electric corporate filings:

Docket Numbers: EC11–25–000.
Applicants: MILFORD POWER CO LLC, EquiPower Resources Corp.
Description: Joint Application of Milford Power Company, LLC and EquiPower Resources Corp. for Authorization of Transaction Under Section 203 of the Federal Power Act.
Filed Date: 11/24/2010.
Accession Number: 20101124–5084.
Comment Date: 5 p.m. Eastern Time on Wednesday, December 15, 2010.

Docket Numbers: EC11–26–000.
Applicants: Batesville Generation Holdings, LLC.
Description: Request for Authorization for the Transfer Through Foreclosure of the Indirect Common Equity Ownership of a Power Plant and Request for an Order Within 30 Days.
Filed Date: 11/26/2010.
Accession Number: 20101126–5006.
Comment Date: 5 p.m. Eastern Time on Friday, December 17, 2010.

Take notice that the Commission received the following exempt wholesale generator filings:

Docket Numbers: EG11–32–000.
Applicants: Red Mesa Wind, LLC.
Description: Notice of Self-Certification of Exempt Wholesale Generator Status of Red Mesa Wind, LLC.
Filed Date: 11/23/2010.
Accession Number: 20101123–5175.
Comment Date: 5 p.m. Eastern Time on Tuesday, December 14, 2010.

Take notice that the Commission received the following electric rate filings:

Docket Numbers: ER11–2182–000.
Applicants: Ameren Illinois Company.
Description: Ameren Illinois Company submits tariff filing per 35.13(a)(2)(iii: Amendment F to Legacy Agreements to be effective 12/31/9998.
Filed Date: 11/24/2010.
Accession Number: 20101124–5068.
Comment Date: 5 p.m. Eastern Time on Wednesday, December 15, 2010.

Docket Numbers: ER11–2183–000.
Applicants: American Electric Power Service Corporation, PJM Interconnection, L.L.C.
Description: American Electric Power Service Corporation submits tariff filing per 35.13(a)(2)(iii: AEP submits Rate Schedules for CSPCo and OPCo under PJM RAA Sched 8.1 Appendix to be effective 1/1/2011.
Filed Date: 11/24/2010.
Accession Number: 20101124–5070.
Comment Date: 5 p.m. Eastern Time on Friday, December 10, 2010.

Docket Numbers: ER11–2184–000.
Applicants: Ameren Illinois Company.
Description: Ameren Illinois Company submits tariff filing per 35.13(a)(2)(iii: Amendment G to Legacy Service Agreements to be effective 12/31/9998.
Filed Date: 11/24/2010.
Accession Number: 20101124–5077.
Comment Date: 5 p.m. Eastern Time on Wednesday, December 15, 2010.

Docket Numbers: ER11–2185–000.
Applicants: The Detroit Edison Company.
Description: The Detroit Edison Company submits tariff filing per 35.12: The City of Detroit Wholesale Distribution Service Agreement to be effective 5/21/2010.
Filed Date: 11/24/2010.
Accession Number: 20101124–5099.
Comment Date: 5 p.m. Eastern Time on Wednesday, December 15, 2010.

Docket Numbers: ER11–2186–000.
Applicants: Ameren Illinois Company.
Description: Ameren Illinois Company submits tariff filing per 35.13(a)(2)(iii: Amendment H to Legacy Service Agreements to be effective 12/31/9998.
Filed Date: 11/24/2010.
Accession Number: 20101124–5109.
Comment Date: 5 p.m. Eastern Time on Wednesday, December 15, 2010.

Docket Numbers: ER11–2187–000.
Applicants: Ameren Illinois Company.
Description: Ameren Illinois Company submits tariff filing per 35.13(a)(2)(iii: Amendment I to Legacy Agreements to be effective 12/31/9998.
Filed Date: 11/24/2010.
Accession Number: 20101124–5113.
Comment Date: 5 p.m. Eastern Time on Wednesday, December 15, 2010.

Docket Numbers: ER11–2188–000.
Applicants: Southwest Power Pool, Inc.
Description: Southwest Power Pool, Inc. submits tariff filing per 35.13(a)(2)(iii: 1910R1 Southwestern Public Service Company NITSA and NOA to be effective 10/29/2010.
Filed Date: 11/24/2010.
Accession Number: 20101124–5115.
Comment Date: 5 p.m. Eastern Time on Wednesday, December 15, 2010.

Docket Numbers: ER11–2189–000.
Applicants: Wisconsin Public Service Corporation.
Description: Wisconsin Public Service Corporation submits tariff filing per 35.1: Baseline Filing of WPSC and UPPCO Open Access Transmission Tariff to be effective 11/24/2010.
Filed Date: 11/24/2010.
Accession Number: 20101124–5116.
Comment Date: 5 p.m. Eastern Time on Wednesday, December 15, 2010.

Docket Numbers: ER11–2190–000.
Applicants: Southwest Power Pool, Inc.
Description: Southwest Power Pool, Inc. submits tariff filing per 35.13(a)(2)(iii: 1139R2 Southwestern Public Service Company NITSA and NOA to be effective 10/29/2010.
Filed Date: 11/24/2010.

Accession Number: 20101124–5118.

Comment Date: 5 p.m. Eastern Time on Wednesday, December 15, 2010.

Docket Numbers: ER11–2191–000.

Applicants: Ameren Illinois Company.

Description: Ameren Illinois Company submits tariff filing per 35.13(a)(2)(iii: Amendment J to Legacy Service Agreements to be effective 12/31/9998.

Filed Date: 11/24/2010.

Accession Number: 20101124–5120.

Comment Date: 5 p.m. Eastern Time on Wednesday, December 15, 2010.

Docket Numbers: ER11–2192–000.

Applicants: Red Mesa Wind, LLC.

Description: Red Mesa Wind, LLC submits tariff filing per 35.12: Red Mesa Wind, LLC to be effective 11/25/2010.

Filed Date: 11/24/2010.

Accession Number: 20101124–5178.

Comment Date: 5 p.m. Eastern Time on Wednesday, December 15, 2010.

Any person desiring to intervene or to protest in any of the above proceedings must file in accordance with Rules 211 and 214 of the Commission's Rules of Practice and Procedure (18 CFR 385.211 and 385.214) on or before 5 p.m. Eastern time on the specified comment date. It is not necessary to separately intervene again in a subdocket related to a compliance filing if you have previously intervened in the same docket. Protests will be considered by the Commission in determining the appropriate action to be taken, but will not serve to make protestants parties to the proceeding. Anyone filing a motion to intervene or protest must serve a copy of that document on the Applicant. In reference to filings initiating a new proceeding, interventions or protests submitted on or before the comment deadline need not be served on persons other than the Applicant.

As it relates to any qualifying facility filings, the notices of self-certification [or self-recertification] listed above, do not institute a proceeding regarding qualifying facility status. A notice of self-certification [or self-recertification] simply provides notification that the entity making the filing has determined the facility named in the notice meets the applicable criteria to be a qualifying facility. Intervention and/or protest do not lie in dockets that are qualifying facility self-certifications or self-recertifications. Any person seeking to challenge such qualifying facility status may do so by filing a motion pursuant to 18 CFR 292.207(d)(iii). Intervention and protests may be filed in response to notices of qualifying facility dockets other than self-certifications and self-recertifications.

The Commission encourages electronic submission of protests and interventions in lieu of paper, using the FERC Online links at *http://www.ferc.gov*. To facilitate electronic service, persons with Internet access who will eFile a document and/or be listed as a contact for an intervenor must create and validate an eRegistration account using the eRegistration link. Select the eFiling link to log on and submit the intervention or protests.

Persons unable to file electronically should submit an original and 14 copies of the intervention or protest to the Federal Energy Regulatory Commission, 888 First St. NE., Washington, DC 20426.

The filings in the above proceedings are accessible in the Commission's eLibrary system by clicking on the appropriate link in the above list. They are also available for review in the Commission's Public Reference Room in Washington, DC. There is an eSubscription link on the Web site that enables subscribers to receive e-mail notification when a document is added to a subscribed dockets(s). For assistance with any FERC Online service, please e-mail *FERCOnlineSupport@ferc.gov.* or call (866) 208–3676 (toll free). For TTY, call (202) 502–8659.

Nathaniel J. Davis, Sr.,

Deputy Secretary.

[FR Doc. 2010–30920 Filed 12–8–10; 8:45 am]

BILLING CODE 6717–01–P

DEPARTMENT OF ENERGY

Federal Energy Regulatory Commission

[Docket No. EL11–8–000]

Transmission Technology Solutions, LLC; Western Grid Development, LLC (Complainants) v. California Independent System Operator, Inc. (Respondent); Notice of Complaint

November 30, 2010.

Take notice that on November 29, 2010, pursuant to Rule 206 of the Rules and Practice and Procedure, 18 CFR 385.206 and section 206 of the Federal Power Act (FPA), Transmission Technology Solutions, LLC (TTS) and Western Grid Development, LLC (WGD) filed a complaint against California Independent System Operator, Inc. (CAISO), alleging that CAISO violated the FPA by engaging in unjust, unreasonable, and discriminatory decisions and actions with respect to TTS's proposed projects in CAISO's 2008–2009 Transmission Planning Process and with respect to WGD's proposed projects in CAISO's 2009–2010 Transmission Planning Process.

Any person desiring to intervene or to protest this filing must file in accordance with Rules 211 and 214 of the Commission's Rules of Practice and Procedure (18 CFR 385.211, 385.214). Protests will be considered by the Commission in determining the appropriate action to be taken, but will not serve to make protestants parties to the proceeding. Any person wishing to become a party must file a notice of intervention or motion to intervene, as appropriate. The Respondent's answer and all interventions, or protests must be filed on or before the comment date. The Respondent's answer, motions to intervene, and protests must be served on the Complainants.

The Commission encourages electronic submission of protests and interventions in lieu of paper using the "eFiling" link at *http://www.ferc.gov*. Persons unable to file electronically should submit an original and 14 copies of the protest or intervention to the Federal Energy Regulatory Commission, 888 First Street, NE., Washington, DC 20426.

This filing is accessible on-line at *http://www.ferc.gov*, using the "eLibrary" link and is available for review in the Commission's Public Reference Room in Washington, DC. There is an "eSubscription" link on the Web site that enables subscribers to receive e-mail notification when a document is added to a subscribed docket(s). For assistance with any FERC Online service, please e-mail *FERCOnlineSupport@ferc.gov,* or call (866) 208–3676 (toll free). For TTY, call (202) 502–8659.

Comment Date: 5 p.m. Eastern Time on December 13, 2010.

Nathaniel J. Davis, Sr.,

Deputy Secretary.

[FR Doc. 2010–30927 Filed 12–8–10; 8:45 am]

BILLING CODE 6717–01–P

DEPARTMENT OF ENERGY

Federal Energy Regulatory Commission

[Docket No. ER11–2196–000]

San Luis Solar, LLC; Supplemental Notice That Initial Market-Based Rate Filing Includes Request for Blanket Section 204 Authorization

December 1, 2010.

This is a supplemental notice in the above-referenced proceeding of San Luis

Solar, LLC's application for market-based rate authority, with an accompanying rate tariff, noting that such application includes a request for blanket authorization, under 18 CFR part 34, of future issuances of securities and assumptions of liability.

Any person desiring to intervene or to protest should file with the Federal Energy Regulatory Commission, 888 First Street, NE., Washington, DC 20426, in accordance with Rules 211 and 214 of the Commission's Rules of Practice and Procedure (18 CFR 385.211 and 385.214). Anyone filing a motion to intervene or protest must serve a copy of that document on the Applicant.

Notice is hereby given that the deadline for filing protests with regard to the applicant's request for blanket authorization, under 18 CFR part 34, of future issuances of securities and assumptions of liability, is December 21, 2010.

The Commission encourages electronic submission of protests and interventions in lieu of paper, using the FERC Online links at *http://www.ferc.gov.* To facilitate electronic service, persons with Internet access who will eFile a document and/or be listed as a contact for an intervenor must create and validate an eRegistration account using the eRegistration link. Select the eFiling link to log on and submit the intervention or protests.

Persons unable to file electronically should submit an original and 14 copies of the intervention or protest to the Federal Energy Regulatory Commission, 888 First Street, NE., Washington, DC 20426.

The filings in the above-referenced proceeding are accessible in the Commission's eLibrary system by clicking on the appropriate link in the above list. They are also available for review in the Commission's Public Reference Room in Washington, DC. There is an eSubscription link on the Web site that enables subscribers to receive e-mail notification when a document is added to a subscribed docket(s). For assistance with any FERC Online service, please e-mail *FERCOnlineSupport@ferc.gov.* or call (866) 208–3676 (toll free). For TTY, call (202) 502–8659.

Nathaniel J. Davis, Sr.,

Deputy Secretary.

[FR Doc. 2010–30939 Filed 12–8–10; 8:45 am]

BILLING CODE 6717–01–P

DEPARTMENT OF ENERGY

Federal Energy Regulatory Commission

[Docket No. ER11–2192–000]

Red Mesa Wind, LLC; Supplemental Notice That Initial Market-Based Rate Filing Includes Request for Blanket Section 204 Authorization

December 1, 2010.

This is a supplemental notice in the above-referenced proceeding of Red Mesa Wind, LLC's application for market-based rate authority, with an accompanying rate tariff, noting that such application includes a request for blanket authorization, under 18 CFR Part 34, of future issuances of securities and assumptions of liability.

Any person desiring to intervene or to protest should file with the Federal Energy Regulatory Commission, 888 First Street, NE., Washington, DC 20426, in accordance with Rules 211 and 214 of the Commission's Rules of Practice and Procedure (18 CFR 385.211 and 385.214). Anyone filing a motion to intervene or protest must serve a copy of that document on the Applicant.

Notice is hereby given that the deadline for filing protests with regard to the applicant's request for blanket authorization, under 18 CFR part 34, of future issuances of securities and assumptions of liability, is December 21, 2010.

The Commission encourages electronic submission of protests and interventions in lieu of paper, using the FERC Online links at *http://www.ferc.gov.* To facilitate electronic service, persons with Internet access who will eFile a document and/or be listed as a contact for an intervenor must create and validate an eRegistration account using the eRegistration link. Select the eFiling link to log on and submit the intervention or protests.

Persons unable to file electronically should submit an original and 14 copies of the intervention or protest to the Federal Energy Regulatory Commission, 888 First Street, NE., Washington, DC 20426.

The filings in the above-referenced proceeding are accessible in the Commission's eLibrary system by clicking on the appropriate link in the above list. They are also available for review in the Commission's Public Reference Room in Washington, DC. There is an eSubscription link on the Web site that enables subscribers to receive e-mail notification when a document is added to a subscribed docket(s). For assistance with any FERC Online service, please e-mail *FERCOnlineSupport@ferc.gov* or call (866) 208–3676 (toll free). For TTY, call (202) 502–8659.

Nathaniel J. Davis, Sr.,

Deputy Secretary.

[FR Doc. 2010–30938 Filed 12–8–10; 8:45 am]

BILLING CODE 6717–01–P

DEPARTMENT OF ENERGY

Federal Energy Regulatory Commission

[Docket No. ER11–2201–000]

Evergreen Wind Power III, LLC; Supplemental Notice that Initial Market-Based Rate Filing Includes Request for Blanket Section 204 Authorization

December 1, 2010.

This is a supplemental notice in the above-referenced proceeding of Evergreen Wind Power III, LLC's application for market-based rate authority, with an accompanying rate tariff, noting that such application includes a request for blanket authorization, under 18 CFR part 34, of future issuances of securities and assumptions of liability.

Any person desiring to intervene or to protest should file with the Federal Energy Regulatory Commission, 888 First Street, NE., Washington, DC 20426, in accordance with Rules 211 and 214 of the Commission's Rules of Practice and Procedure (18 CFR 385.211 and 385.214). Anyone filing a motion to intervene or protest must serve a copy of that document on the Applicant.

Notice is hereby given that the deadline for filing protests with regard to the applicant's request for blanket authorization, under 18 CFR part 34, of future issuances of securities and assumptions of liability, is December 21, 2010.

The Commission encourages electronic submission of protests and interventions in lieu of paper, using the FERC Online links at *http://www.ferc.gov.* To facilitate electronic service, persons with Internet access who will eFile a document and/or be listed as a contact for an intervenor must create and validate an eRegistration account using the eRegistration link. Select the eFiling link to log on and submit the intervention or protests.

Persons unable to file electronically should submit an original and 14 copies of the intervention or protest to the Federal Energy Regulatory Commission,

888 First Street, NE., Washington, DC 20426.

The filings in the above-referenced proceeding are accessible in the Commission's eLibrary system by clicking on the appropriate link in the above list. They are also available for review in the Commission's Public Reference Room in Washington, DC. There is an eSubscription link on the Web site that enables subscribers to receive e-mail notification when a document is added to a subscribed docket(s). For assistance with any FERC Online service, please e-mail *FERCOnlineSupport@ferc.gov.* or call (866) 208–3676 (toll free). For TTY, call (202) 502–8659.

Nathaniel J. Davis, Sr.,

Deputy Secretary.

[FR Doc. 2010–30936 Filed 12–8–10; 8:45 am]

BILLING CODE 6717–01–P

ENVIRONMENTAL PROTECTION AGENCY

[EPA–R07–OW–2010–0898; FRL–9236–7]

Notice of a Regional Project Waiver of Section 1605 (Buy American) of the American Recovery and Reinvestment Act of 2009 (ARRA) to the Central Iowa Water Association

AGENCY: Environmental Protection Agency (EPA).

ACTION: Notice.

SUMMARY: EPA is hereby granting a waiver of the Buy American requirements of ARRA Section 1605 under the authority of Section 1605(b)(2) [manufactured goods are not produced in the United States in sufficient and reasonably available quantities and of a satisfactory quality] to the Central Iowa Water Association (CIWA) for the purchase of ORION Water Meter Monitor with Leak Detection Indicator in-home water meter monitors manufactured in Malaysia by Eastech, Inc., under license from Badger Meter, Inc., located in Milwaukee, Wisconsin. This is a project specific waiver and only applies to the use of the specified product for the ARRA project being proposed. Any other ARRA recipient that wishes to use the same product must apply for a separate waiver based on project specific circumstances. The waiver applicant states that the Badger in-home water meter monitors are the only devices that are compatible with the water meter heads installed by the CIWA. The Regional Administrator is making this determination based on the review and recommendations of the Drinking Water State Revolving Fund (DWSRF) staff. CIWA has provided sufficient documentation to support their waiver request. The Assistant Administrator of the Office of Administration and Resources Management has concurred on this decision to make an exception to Section 1605 of ARRA.

DATES: *Effective Date:* November 30, 2010.

FOR FURTHER INFORMATION CONTACT: Christopher Simmons, Environmental Engineer, Water Wetlands and Pesticides Division (WWPD), Environmental Protection Agency, Region 7, 901 N. 5th Street, Kansas City, KS 66101, telephone number (913) 551–7237; *e-mail address: simmons.christopher@epa.gov.*

SUPPLEMENTARY INFORMATION: In accordance with ARRA Section 1605(c), EPA hereby provides notice that we are granting a project waiver of the requirements of Section 1605(a) of Public Law 111–5, Buy American requirements, to the Central Iowa Water Association for the purchase of a non-domestically manufactured ORION Water Meter Monitor with Leak Detection Indicator in-home water meter monitors manufactured in Malaysia by Eastech, Inc., under license from Badger Meter, Inc., located in Milwaukee, Wisconsin, to meet CIWA's project specifications.

Section 1605 of the ARRA requires that none of the appropriated funds may be used for the construction, alteration, maintenance, or repair of a public building or a public works project unless all of the iron, steel, and manufactured goods used in the project is produced in the United States, or unless a waiver is provided to the recipient by the head of the appropriate agency, here the EPA. A waiver may be provided if EPA determines that (1) applying these requirements would be inconsistent with the public interest; (2) iron, steel, and the relevant manufactured goods are not produced in the United States in sufficient and reasonably available quantities and of a satisfactory quality; or (3) inclusion of iron, steel, and the relevant manufactured goods produced in the United States will increase the cost of the overall project by more than 25 percent.

The CIWA drinking water improvement project is proposing the use of a non-domestically manufactured water meter monitor. This project will improve efficiency and promote water conservation by providing customers with a single meter reading platform and in-home monitoring devices. Residential water meters have been supplied and utilized by Sensus since the late 1970's. The current Sensus water meters are now aged and obsolete. The Sensus meter technology has been discontinued and an in home monitoring unit is not available for the North American market.

The Drinking Water State Revolving Fund (DWSRF) staff has reviewed this waiver request and has determined that the supporting documentation provided by the CIWA establishes both a proper basis to specify a particular manufactured good, and that there is no domestic manufactured good currently available. The information provided is sufficient to meet the following criteria listed under Section 1605(b) of the ARRA and in the April 28, 2009 Memorandum: Iron, steel, and the manufactured goods are not produced in the United States in sufficient and reasonably available quantities and of a satisfactory quality.

EPA has also evaluated CIWA's request to determine if its submission is considered late or if it could be considered timely, as per the OMB Guidance at CFR 176.120. EPA will generally regard waiver requests with respect to components that were specified in the bid solicitation or in a general/primary construction contract as "late" if submitted after the contract date. However, EPA could also determine that a request be evaluated as timely, though made after the date that the contract was signed, if the need for a waiver was not reasonably foreseeable. If the need for a waiver is reasonably foreseeable, then EPA could still apply discretion in these late cases as per the OMB Guidance, which says "the award official may deny the request." For those waiver requests that do not have a reasonably unforeseeable basis for lateness, but for which the waiver basis is valid and there is no apparent gain by the ARRA recipient or loss on behalf of the government, then EPA will still consider granting a waiver.

In this case, CIWA's waiver request indicates that the Badger in-home water meter monitors are the only devices compatible with the Badger meter transmitter system and that no other water meter monitors are capable of meeting satisfactory quality to meet the technical specifications. The existing installed Sensus meter technology has been discontinued and Sensus has indicated that an equivalent in home monitoring unit is not available from Sensus for the North American market at this time. CIWA was not informed that the water meter monitor was not American made until the point of signing a final purchase agreement, after the contract was signed. There is no

indication that CIWA failed to request a waiver in order to avoid the requirements of the ARRA, particularly since there are no domestically manufactured products available that meet the project specifications. Therefore, EPA will consider CIWA's waiver request, a foreseeable late request, as though it had been timely made since there is no gain by CIWA and no loss by the government due to the late request.

Furthermore, the purpose of the ARRA is to stimulate economic recovery by funding current infrastructure construction, not to delay projects that are "shovel ready" by requiring potential SRF eligible recipients, such as the Central Iowa Water Association to revise their design standards and specifications as well as their construction schedule. There are no domestic manufacturers that can provide a compatible water meter monitor that meets the specifications of this drinking water improvement project. To delay this construction would directly conflict with a fundamental economic purpose of ARRA, which is to create or retain jobs.

The April 28, 2009 EPA HQ Memorandum, "Implementation of Buy American provisions of Public Law 111–5, the 'American Recovery and Reinvestment Act of 2009' " ("Memorandum"), defines *reasonably available quantity* as "the quantity of iron, steel, or relevant manufactured good is available or will be available at the time needed and place needed, and in the proper form or specification as specified in the project plans and design." The same Memorandum defines "satisfactory quality" as "the quality of steel, iron or manufactured good specified in the project plans and designs."

The March 31, 2009 Delegation of Authority Memorandum provided Regional Administrators with the temporary authority to issue exceptions to Section 1605 of the ARRA within the geographic boundaries of their respective regions and with respect to requests by individual grant recipients.

Having established both a proper basis to specify the particular good required for this project and that this manufactured good was not available from a producer in the United States, the CIWA is hereby granted a waiver from the Buy American requirements of Section 1605(a) of Public Law 111–5. This waiver permits use of ARRA funds for the purchase of a non-domestic manufactured ORION Water Meter Monitors with Leak Detection Indicator documented in the CIWA's waiver request submittal dated June 24, 2010. This supplementary information constitutes the detailed written justification required by Section 1605(c) for waivers based on a finding under subsection (b).

Authority: Public Law 111–5, section 1605.

Dated: November 30, 2010.

Karl Brooks,

Regional Administrator, Region 7.

[FR Doc. 2010–30971 Filed 12–8–10; 8:45 am]

BILLING CODE 6560–50–P

FARM CREDIT ADMINISTRATION

Market Access Agreement

AGENCY: Farm Credit Administration.

ACTION: Notice of approval of the draft amendment to the amended and restated market access agreement.

SUMMARY: The Farm Credit Administration (FCA or we) announces its approval of the draft amendment to the Amended and Restated Market Access Agreement (MAA) proposed to be entered into by all of the banks of the Farm Credit System (System) and the Federal Farm Credit Banks Funding Corporation (Funding Corporation). The MAA sets forth the rights and responsibilities of each of the parties when the condition of a bank falls below pre-established financial performance thresholds. The draft amendment (MAA Amendment) is intended to conform the MAA to the Joint and Several Liability Reallocation Agreement (Reallocation Agreement).

FOR FURTHER INFORMATION CONTACT: Chris Wilson, Financial Analyst, Office of Regulatory Policy, Farm Credit Administration, McLean, VA 22102–5090, (703) 883–4204, TTY (703) 883–4434, or Rebecca S. Orlich, Senior Counsel, Office of General Counsel, Farm Credit Administration, McLean, VA 22102–5090, (703) 883–4020, TTY (703) 883–4020.

SUPPLEMENTARY INFORMATION: On August 18, 2010, the FCA published for comment a proposed Reallocation Agreement to be entered into by all of the banks of the System and the Funding Corporation (75 FR 51061). The Reallocation Agreement is designed to establish a procedure for non-defaulting banks to pay maturing System-wide debt on behalf of defaulting banks prior to a statutory joint and several call by the FCA. We received no comments on the proposal and approved it without modifications. The FCA's approval was published in the **Federal Register** on October 20, 2010 (75 FR 64727).

In the supplementary information we provided when we published the proposal for public comment, the FCA stated that the System banks and the Funding Corporation intended also to make conforming changes to the MAA to ensure that the MAA provisions did not impede operation of the Reallocation Agreement. The FCA stated further that, should the Agency approve the Reallocation Agreement, it expected also to approve the conforming MAA Amendment and would publish it in the **Federal Register**.

The FCA published the current MAA in its entirety in the **Federal Register** on January 15, 2003 (68 FR 2037). The current MAA establishes certain financial thresholds at which conditions are placed on the activities of a bank or a bank's access to participation in System-wide and consolidated obligations is restricted. The MAA establishes three categories, which are based on each bank's net collateral ratio, permanent capital ratio, and scores under the Contractual Inter-bank Performance Agreement, which is an agreement among the System banks and the Funding Corporation that establishes certain financial performance criteria.

Under the MAA, as a bank's financial condition declines, the bank moves into Category I, then Category II, and finally Category III. When a bank reaches Category I, it is required to provide certain additional information, including information as to how it will improve its financial condition, to the Monitoring and Advisory Committee, a committee of bank and Funding Corporation representatives established under the MAA. When a bank reaches Category II, in addition to being required to provide additional information, the bank is limited to joining in the issuance of System-wide and consolidated obligations only in those amounts necessary for the bank to be able to roll over its maturing debt. When the bank reaches Category III, the bank is precluded from joining in the issuance of System-wide and consolidated obligations.

The MAA includes provisions that enable a bank in Category II or III to request the opportunity to continue its access to the market. The MAA also provides that the FCA may override a decision to impose Category III prohibitions on access to the market for a period of 60 days, which may be renewed for an additional 60-day period.

The MAA Amendment adds new sections 4.05, 5.05, and 7.23 to the MAA. The MAA Amendment provides that, in a circumstance where the joint

and several payment provisions of the Reallocation Agreement have been triggered, all non-defaulting System banks will be able to issue System-wide obligations to fund payments under the Reallocation Agreement. This means that even banks in Category II and III could participate in such issuances. The MAA Amendment also provides that the MAA and the Reallocation Agreement are separate agreements, and invalidation of one does not affect the other.

The FCA now approves the MAA Amendment as set forth below. The FCA's approval is conditioned on the board of directors of each bank and the Funding Corporation approving the MAA Amendment. Neither the MAA Amendment, when it becomes effective, nor FCA approval of it shall in any way restrict or qualify the authority of the FCA or the Farm Credit System Insurance Corporation (FCSIC) to exercise any of the powers, rights, or duties granted by law to the FCA or the FCSIC. Finally, the FCA retains the right to modify or revoke its approval of the MAA, including the MAA Amendment, at any time.

The MAA Amendment, together with the recitals to the amendment, is as follows:

Amendment to the Amended and Restated Market Access Agreement

This amendment to the amended and restated market access agreement (the "*Amendment*") is made as of the [__] day of [_____] (the "*Effective Date*"), by and among AgFirst Farm Credit Bank; AgriBank, FCB; CoBank, ACB; the Farm Credit Bank of Texas; and the U.S. AgBank, FCB (as successor to the Farm Credit Bank of Wichita and the Western Farm Credit Bank under Section 7.12 of the Market Access Agreement) (each, a "*Bank,*" and collectively, the "*Banks*"), and the Federal Farm Credit Banks Funding Corporation (the "*Funding Corporation*").

Whereas, the Banks and the Funding Corporation desire to adopt a contractual reallocation of each Bank's joint and several liability obligations as an alternative to Section 4.4(a)(2) of the Farm Credit Act of 1971, as amended (the "*Joint and Several Liability Reallocation Agreement*");

Whereas, the Banks and the Funding Corporation desire to amend the Amended and Restated Market Access Agreement dated July 1, 2003 (the "*Market Access Agreement*") in order to effectuate the intended purpose of the Joint and Several Liability Reallocation Agreement;

Whereas, the boards of directors of the Banks and the Funding Corporation gave approval to the Amendment subject to certain conditions;

Whereas, the Amendment was submitted to the Farm Credit Administration (the "*FCA*") for approval and to the Farm Credit System Insurance Corporation (the "*Insurance Corporation*") for an expression of no objection;

Whereas, the FCA published a description of this Amendment in connection with the publication of the Joint and Several Liability Reallocation Agreement in the **Federal Register** on August 18, 2010 and sought comments thereon;

Whereas, after receiving comments on the Joint and Several Liability Reallocation Agreement,[1] the FCA, pursuant to the letter dated ____, approved this Amendment subject to modifications, if any, that are acceptable to the Banks and the Funding Corporation and a notice of such approval was published in the **Federal Register** on [_____];

Whereas, the Insurance Corporation, pursuant to the letter dated [_____], from the Insurance Corporation to the Banks and the Funding Corporation, expressed no objection to this Amendment;

Now therefore, in consideration of the foregoing, the Banks and the Funding Corporation, intending to be legally bound hereby, agree to further amend the Market Access Agreement as follows:

Section 1.01 After current Section 4.04 of the Market Access Agreement, add new Section 4.05, which reads as follows:

"Section 4.05. *Relationship to the Joint and Several Liability Reallocation Agreement.* A Category II Bank shall not be subject to the Final Restrictions and Category II Interim Restrictions, to the extent that the Final Restrictions and Category II Interim Restrictions would prohibit such Category II Bank from issuing debt required to fund such Category II Bank's liabilities and obligations under the Joint and Several Liability Reallocation Agreement."

Section 1.02 After current Section 5.04 of the Market Access Agreement, add new Section 5.05, which reads as follows:

"Section 5.05. *Relationship to the Joint and Several Liability Reallocation Agreement.* A Category III Bank shall not be subject to the Final Prohibition or Category III Interim Restrictions, to the extent that the Final Prohibition or Category III Interim Restrictions would prohibit such Category III Bank from issuing debt required to fund such Category III Bank's liabilities and obligations under the Joint and Several Liability Reallocation Agreement."

Section 1.03 After current Section 7.22 of the Market Access Agreement, add new Section 7.23, which reads as follows:

"Section 7.23. *Relationship to the Joint and Several Liability Reallocation Agreement.* This Restated MAA and the Joint and Several Liability Reallocation Agreement are separate agreements, and invalidation of one does not affect the other."

Section 1.04 Continuation of Market Access Agreement. Except as expressly provided in this Amendment, the Market Access Agreement shall remain in full force and effect in accordance with its terms.

Section 1.05 Counterparts. This Amendment may be executed in two or more counterparts, each of which shall be deemed to be an original, but all of which together shall constitute a single document.

In witness whereof, each party hereto has caused this Amendment to be executed by its duly authorized officers or representatives, all as of the date written below.

AGFIRST FARM CREDIT BANK
By: _____
Name: _____
Title: _____
Date: _____

AGRIBANK, FCB
By: _____
Name: _____
Title: _____
Date: _____

COBANK, ACB
By: _____
Name: _____
Title: _____
Date: _____

Farm Credit Bank of Texas
By: _____
Name: _____
Title: _____
Date: _____

U.S. AGBANK, FCB
By: _____

[1] We note that, although this paragraph states that the FCA received comments on the Reallocation Agreement, we did not receive comments on it.

Name:

Title:

Date:

Federal Farm Credit Banks Funding Corporation

By:

Name:

Title:

Date:

Dated: December 3, 2010.

Roland E. Smith,

Secretary, Farm Credit Administration Board.

[FR Doc. 2010–30930 Filed 12–8–10; 8:45 am]

BILLING CODE 6705–01–P

FEDERAL COMMUNICATIONS COMMISSION

[MB Docket No. 10–238; DA 10–2227]

Request for Comment for Report on In-State Broadcast Programming

AGENCY: Federal Communications Commission.

ACTION: Notice; solicitation of comments.

SUMMARY: This document solicits public comments and data for use in preparation of a report on in-state broadcasting required by Section 304 of the Satellite Television Extension and Localism Act of 2010 (STELA). The Commission is required by legislative mandate to submit this report no later than August 27, 2011.

DATES: Comments may be filed on or before January 24, 2011, and reply comments may be filed on or before February 22, 2011.

ADDRESSES: Federal Communications Commission, 445 12th Street, SW., Washington, DC 20554.

FOR FURTHER INFORMATION CONTACT: Dan Bring, Media Bureau (202) 418–2164, TTY (202) 418–7172, or e-mail at *Danny.Bring@fcc.gov.*

SUPPLEMENTARY INFORMATION: This is a synopsis of the Commission's document in MB Docket No. 10–238, DA–10–2227, released November 23, 2010. The complete text of the document is available for inspection and copying during normal business hours in the FCC Reference Center, 445 12th Street, SW., Washington, DC 20554, and may also be purchased from the Commission's copy contractor, BCPI, Inc., Portals II, 445 12th Street, SW., Washington, DC 20054. Customers may contact BCPI, Inc. at their Web site *http://www.bcpi.com* or call 1–800–378–3160.

Synopsis

1. Section 304 of the Satellite Television Extension and Localism Act of 2010 (STELA) requires the Commission to submit a report on in-state broadcast programming to the appropriate Congressional committees no later than 18 months after its enactment (*i.e.,* August 27, 2011). Satellite Television Extension and Localism Act of 2010, Title V of the "American Workers, State, and Business Relief Act of 2010," Public Law 111–175, 124 Stat. 1218 (2010). By this Public Notice, the Media Bureau (Bureau) seeks comment for use in preparation of the required report.

2. Specifically, Section 304 of STELA states:

> SEC. 304. REPORT ON IN-STATE BROADCAST PROGRAMMING. Not later than 18 months after the date of the enactment of this Act, the Federal Communications Commission shall submit to the appropriate Congressional committees a report containing an analysis of—
>
> (1) The number of households in a State that receive the signals of local broadcast stations assigned to a community of license that is located in a different State;
>
> (2) the extent to which consumers in each local market have access to in-state broadcast programming over the air or from a multichannel video programming distributor; and
>
> (3) whether there are alternatives to the use of designated market areas, as defined in section 122 of title 17, United States Code, to define local markets that would provide more consumers with in-state broadcast programming.

3. To analyze the issues relating to the availability of in-state broadcast stations for consumers, the Bureau seeks comment generally regarding the appropriate methodologies, metrics, data sources, and level of granularity we should use for our report to Congress required under Section 304. We also seek comment regarding our interpretation of and metrics appropriate for each of the specific subsections of Section 304. In addition, the Bureau requests data for use in preparation of the report.

4. *Section 304(1):* Section 304(1) requires the Commission to estimate the number of households in a state that receive the signals of local broadcast stations assigned to a community of license that is located in a different state. The Bureau proposes to use OET Bulletin No. 69 (OET 69) methodology to estimate the number of households in each broadcast television station's service area. OET Bulletin 69, available at *http://www.fcc.gov/oet/info/documents/bulletins/#69,* provides guidance on the use of the Longley-Rice propagation model and U.S. Census blocks to evaluate TV service coverage and interference. The Bureau seeks comment on the use of OET 69 and which stations to include in the analysis (*i.e.,* commercial, noncommercial educational, Class A, translators, satellite, and/or low-power).

5. *Section 304(2):* Section 304(2) requires the Commission to estimate the extent to which consumers in each local market have access to in-state broadcast programming over-the-air or from a multichannel video programming distributor (MVPD). The Bureau proposes that the term "consumers" should be interpreted as households, the term "local market" should be interpreted as the designated market area (DMA), and the term "access" should refer to the ability to obtain a television station's broadcast programming. The Bureau seeks comment on the interpretation of these terms.

6. The Bureau seeks comment on whether the intent of the Section 304(2) analysis is to identify geographic areas (*e.g.,* counties) and associated populations within specific states that have limited access to in-state broadcast programming and whether analysis based on DMAs will identify these geographic areas and populations. The Bureau also seeks comment on whether other criteria should be considered, such as network affiliation or whether the stations offer local news. To measure the "extent" to which consumers in each local market have access to in-state broadcast programming, the Bureau intends to collect, aggregate, and compare data based on DMAs and counties and requests data on a DMA and county basis. Commenters also are invited to suggest and provide data for other geographic areas that would be responsive to the directive of Section 304(2). Commenters are asked to submit any other data that they believe will assist the Commission in preparing the report.

7. In addition, the Bureau seeks comment on three possible approaches for measuring the extent of access to in-state broadcast programming, whereby we would estimate the number of households that have access to (1) a specific number of in-state stations, (2) some percentage of their broadcast programming from in-state stations, or (3) some percentage of the stations licensed to communities in their state. The Bureau asks commenting parties to

provide data associated with the approach recommended, or to direct the Commission to any outside data sources where such specific data may be available.

8. For the Section 304(2) analysis, the Bureau proposes to use the Longley-Rice methodology to estimate access to broadcast programming over-the-air and data from the Annual Report of Cable Television Systems, FCC Form 325, to estimate access to broadcast programming carried by some, but not all, cable systems. The Bureau requests that all MVPDs provide information on the broadcast stations they carry on their systems and whether they carry the same broadcast stations throughout the DMA, county or other geographic area. The Bureau seeks comment on the proposed sources of data for estimating over-the-air and MVPD access to broadcast programming and whether there are other sources of data that would provide more reliable estimates. The Bureau also seeks comment on the appropriate methodology for combining broadcast and MVPD data that may be collected from different sources using different geographic bases and the most appropriate way to aggregate data from broadcast, cable, DBS, and other MVPDs. Commenters are requested to provide relevant data or data sources associated with the methodology they recommend.

9. The Bureau seeks comment on whether and how to include information for the United States Virgin Islands, Puerto Rico, and Guam in this report. The Bureau also requests that MVPDs provide data to measure the extent of access to in-state broadcast programming in these three geographic areas.

10. *Section 304(3):* Section 304(3) requires the Commission to consider alternatives to the use of DMAs to define local markets that would provide more consumers with in-state broadcast programming. DMAs are used in the planning and purchase of television advertising and are also referenced in FCC regulations regarding the carriage of broadcast television stations on cable and DBS systems and in the media ownership rules. As such, redefining local markets with alternative geographic areas would likely affect viewers, the advertising market, the number of stations carried by MVPDs, and ownership of stations. The Bureau seeks comment on alternatives to the use of DMAs and the effects of alternatives on viewers, advertising markets, number of stations carried by MVPDs, ownership of stations, network affiliation agreements, and areas of exclusivity.

Procedural Matters

11. *Ex Parte Rules.* There are no ex parte or disclosure requirements applicable to this proceeding pursuant to 47 CFR 1.204(b)(1).

12. *Comment Information.* Pursuant to sections 1.415 and 1.419 of the Commission's rules, 47 CFR 1.415, 1.419, interested parties may file comments and reply comments on or before the dates indicated on the first page of this document. Comments may be filed using: (1) The Commission's Electronic Comment Filing System (ECFS), (2) the Federal Government's eRulemaking Portal, or (3) by filing paper copies.

See Electronic Filing of Documents in Rulemaking Proceedings, 63 FR 24121 (1998).

• Electronic Filers: Comments may be filed electronically using the Internet by accessing the ECFS: *http://fjallfoss.fcc.gov/ecfs2/* or the Federal eRulemaking Portal: *http://www.regulations.gov.*

• For ECFS filers, if multiple docket or rulemaking numbers appear in the caption of this proceeding, filers must transmit one electronic copy of the comments for each docket or rulemaking number referenced in the caption. In completing the transmittal screen, filers should include their full name, U.S. Postal Service mailing address, and the applicable docket or rulemaking number. Parties may also submit an electronic comment by Internet e-mail. To get filing instructions, filers should send an e-mail to *ecfs@fcc.gov,* and include the following words in the body of the message "get form." A Sample form and directions will be sent in response.

• Paper Filers: Parties who choose to file by paper must file an original and four copies of each filing. If more than one docket or rulemaking number appears in the caption of this proceeding, filers must submit two additional copies for each additional docket or rulemaking number.

Filings can be sent by hand or messenger delivery, by commercial overnight courier, or by first-class or overnight U.S. Postal Service mail. All filings must be addressed to the Commission's Secretary, Office of the Secretary, Federal Communications Commission.

• All hand-delivered or messenger-delivered paper filings for the Commission's Secretary must be delivered to FCC Headquarters at 445 12th St., SW., Room TW–A325, Washington, DC 20554. The filing hours are 8 a.m. to 7 p.m. All hand deliveries must be held together with rubber bands or fasteners. Any envelopes must be disposed of before entering the building.

• Commercial overnight mail (other than U.S. Postal Service Express Mail and Priority Mail) must be sent to 9300 East Hampton Drive, Capitol Heights, MD 20743.

• U.S. Postal Service first-class, Express, and Priority mail must be addressed to 445 12th Street, SW., Washington DC 20554.

• People with Disabilities: Contact the FCC to request materials in accessible formats for people with disabilities (braille, large print, electronic files, audio format), send an e-mail to *fcc504@fcc.gov* or call the Consumer & Governmental Affairs Bureau at 202–418–0530 (voice), 202–418–0432 (TTY).

Federal Communications Commission.

Thomas Horan,

Chief of Staff, Media Bureau.

[FR Doc. 2010–30987 Filed 12–8–10; 8:45 am]

BILLING CODE 6712–01–P

FEDERAL ELECTION COMMISSION

Sunshine Act Notices

DATE AND TIME: Thursday, December 2, 2010, at 10 a.m.

PLACE: 999 E Street, NW., Washington, DC (Ninth Floor).

STATUS: This meeting will be open to the public.

The Following Items were Withdrawn from the Agenda:

Proposed Final Audit Report on the Washington State Democratic Central Committee

Proposed Final Audit Report on the Tennessee Republican Party Federal Election Account

Individuals who plan to attend and require special assistance, such as sign language interpretation or other reasonable accommodations, should contact Shawn Woodhead Werth, Commission Secretary and Clerk, at (202) 694–1040, at least 72 hours prior to the hearing date.

PERSON TO CONTACT FOR INFORMATION: Judith Ingram, Press Officer, *Telephone:* (202) 694–1220.

Shawn Woodhead Werth,

Secretary and Clerk of the Commission.

[FR Doc. 2010–30736 Filed 12–8–10; 8:45 am]

BILLING CODE 6715–01–M

FEDERAL RESERVE SYSTEM

Federal Open Market Committee; Domestic Policy Directive of November 2 and 3, 2010

In accordance with Section 271.25 of its rules regarding availability of information (12 CFR part 271), there is set forth below the domestic policy directive issued by the Federal Open Market Committee at its meeting held on November 2 and 3, 2010.[1]

The Federal Open Market Committee seeks monetary and financial conditions that will foster price stability and promote sustainable growth in output. To further its long-run objectives, the Committee seeks conditions in reserve markets consistent with federal funds trading in a range from 0 to ¼ percent. The Committee directs the Desk to execute purchases of longer-term Treasury securities by the end of June 2011 in order to increase the total face value of domestic securities held in the System Open Market Account to approximately $2.6 trillion. The Committee also directs the Desk to reinvest principal payments from agency debt and agency mortgage-backed securities in longer-term Treasury securities. The System Open Market Account Manager and the Secretary will keep the Committee informed of ongoing developments regarding the System's balance sheet that could affect the attainment over time of the Committee's objectives of maximum employment and price stability.

By order of the Federal Open Market Committee.

Dated: November 24, 2010.

William B. English,

Secretary, Federal Open Market Committee.

[FR Doc. 2010–30863 Filed 12–8–10; 8:45 am]

BILLING CODE 6210–01–P

FEDERAL RESERVE SYSTEM

Formations of, Acquisitions by, and Mergers of Bank Holding Companies

The companies listed in this notice have applied to the Board for approval, pursuant to the Bank Holding Company Act of 1956 (12 U.S.C. 1841 *et seq.*) (BHC Act), Regulation Y (12 CFR part 225), and all other applicable statutes and regulations to become a bank holding company and/or to acquire the assets or the ownership of, control of, or the power to vote shares of a bank or bank holding company and all of the banks and nonbanking companies owned by the bank holding company, including the companies listed below.

The applications listed below, as well as other related filings required by the Board, are available for immediate inspection at the Federal Reserve Bank indicated. The application also will be available for inspection at the offices of the Board of Governors. Interested persons may express their views in writing on the standards enumerated in the BHC Act (12 U.S.C. 1842(c)). If the proposal also involves the acquisition of a nonbanking company, the review also includes whether the acquisition of the nonbanking company complies with the standards in section 4 of the BHC Act (12 U.S.C. 1843). Unless otherwise noted, nonbanking activities will be conducted throughout the United States.

Unless otherwise noted, comments regarding each of these applications must be received at the Reserve Bank indicated or the offices of the Board of Governors not later than January 3, 2011.

A. Federal Reserve Bank of Dallas (E. Ann Worthy, Vice President) 2200 North Pearl Street, Dallas, Texas 75201–2272:

1. Carlile Bancshares, Inc., Fort Worth, Texas; to acquire 100 percent of the voting shares of Community State Bank, Austin, Texas.

Board of Governors of the Federal Reserve System, December 6, 2010.

Robert deV. Frierson,

Deputy Secretary of the Board.

[FR Doc. 2010–30957 Filed 12–8–10; 8:45 am]

BILLING CODE 6210–01–P

FEDERAL TRADE COMMISSION

Granting of Request for Early Termination of the Waiting Period Under the Premerger Notification Rules

Section 7A of the Clayton Act, 15 U.S.C. 18a, as added by Title II of the Hart-Scott-Rodino Antitrust Improvements Act of 1976, requires persons contemplating certain mergers or acquisitions to give the Federal Trade Commission and the Assistant Attorney General advance notice and to wait designated periods before consummation of such plans. Section 7A(b)(2) of the Act permits the agencies, in individual cases, to terminate this waiting period prior to its expiration and requires that notice of this action be published in the **Federal Register**.

The following transactions were granted early termination of the waiting period provided by law and the premerger notification rules. The grants were made by the Federal Trade Commission and the Assistant Attorney General for the Antitrust Division of the Department of Justice. Neither agency intends to take any action with respect to these proposed acquisitions during the applicable waiting period.

ET Date	Trans No.	ET req. status	Party name
Transaction Granted Early Termination			
01–NOV–10	20110087	G	John B. Hess.
		G	Hess Corporation.
		G	Hess Corporation.
02–NOV–10	20110011	G	Focus Brands Holdings Inc.
		G	Samuel R. Beiler.
		G	Auntie Anne's Food, Inc.
	20110089	G	ASSA ABLOY AB.
		G	Actividentity Corporation.
		G	Actividentity Corporation.
03–NOV–10	20110038	G	ACS Actividades de Construccion y Servicios, S.A.
		G	HOCHTIEF Aktiengesellschaft.
		G	HOCHTIEF Aktiengesellschaft.
	20110063	G	BAE Systems plc.

[1] Copies of the Minutes of the Federal Open Market Committee at its meeting held on November 2 and 3, 2010, which includes the domestic policy directive issued at the meeting, are available upon request to the Board of Governors of the Federal Reserve System, Washington, DC 20551. The minutes are published in the Federal Reserve Bulletin and in the Board's Annual Report.

ET Date	Trans No.	ET req. status	Party name
		G	L–1 Identity Solutions, Inc.
		G	SpecTal, LLC.
		G	Advanced Concepts, Inc.
		G	McClendon, LLC.
	20110067	G	The Veritas Capital Fund IV, L.P.
		G	Lockheed Martin Corporation.
		G	Lockheed Martin Corporation.
	20110094	G	LS Power Equity Partners II, L.P.
		G	PPL Corporation.
		G	Newco, LLC.
		G	Safe Harbor Water Power Corporation.
		G	PPL Wallingford Energy, LLC.
	20110095	G	LS Power Equity Partners II, L.P.
		G	Constellation Energy Group, Inc.
		G	Safe Harbor Water Power Corporation.
4–NOV–10	20110056	G	Koninklijke Philips Electronics N.y.
		G	Discus Holdings, Inc.
		G	Discus Holdings, Inc.
	20110100	G	Riverside Capital Appreciation Fund V, L.P.
		G	Edgewater Growth Capital Partners II, LP.
		G	GHW Holdings Corporation.
Transaction Granted Early Termination			
05–NOV–10	20110078	G	Mason Capital Master Fund, LP.
		G	The Babcock & Wilcox Company.
		G	The Babcock & Wilcox Company.
	20110092	G	Dr. Ernst Volgeneau.
		G	Laila N. Rossi.
		G	Platinum Solutions, Inc.
	20110099	G	Gammon Gold Inc.
		G	Capital Gold Corporation.
		G	Capital Gold Corporation.
08–NOV–10	20110015	G	Providence Equity Partners VI L.P.
		G	Nighthawk Radiology Holdings Inc.
		G	Nighthawk Radiology Holdings Inc.
	20110088	G	Deere & Company.
		G	Anden Van Beek.
		G	A&I Products, Inc.
	20110096	G	Grupo Televisa, S.A.B.
		G	Broadcasting Media Partners, Inc.
		G	Broadcasting Media Partners, Inc.
	20110107	G	Centerview Capital, L.P.
		G	Brynwood Partners V L.P.
		G	Richelieu Foods, Inc.
	20110113	G	Rayburn Country Electric Cooperative, Inc.
		G	Calpine Corporation.
		G	Freestone Power Generation LP.
	20110115	G	ORIX Corporation.
		G	MIG Holdings, LLC.
		G	MIG Holdings, LLC.
	20110117	G	Littlejohn Fund IV, L.P.
		G	Wynnchurch Capital Partners II, L.P.
		G	Henniges Automotive Holdings, Inc.
	20110126	G	Court Square Capital Partners II, L.P.
		G	New Mountain Partners II, L.P.
		G	MailSouth, Inc.
Transaction Granted Early Termination			
09–NOV–10	20110076	G	St. Jude Medical, Inc.
		G	AGA Medical Holdings, Inc.
		G	AGA Medical Holdings, Inc.
	20110104	G	Baker Brothers Life Sciences, L.P.
		G	ViroPharma Incorporated.
		G	Viropharma Incorporated.
15–NOV–10	20110120	G	Roark Capital Partners II, LP.
		G	North Castle Partners 2007, LP.
		G	NCP–ATK Holdings, Inc.
		G	Bora Bora Ltd.
	20110125	G	Nippon Telegraph and Telephone Corporation.
		G	Citigroup Inc.
		G	Keane International, Inc.

ET Date	Trans No.	ET req. status	Party name
	20110130	G	Charlesbank Equity Fund VII, Limited Partnership.
		G	Coretec Group Fund III, L.P.
		G	FFR Holding Corporation.
	20110134	G	Riverside Capital Appreciation Fund V LP.
		G	FdG Capital Partners II LP.
		G	Sunrise Windows Ltd.
	20110136	G	TSG5 L.P.
		G	John M. Jansheski.
		G	DenTek Oral Care, Inc.
	20110149	G	Charlesbank Equity Fund VII, Limited Partnership.
		G	Oncore Topco Corporation.
		G	Oncore Topco Corporation.
	20110162	G	Sentinel Capital Partners IV, L.P.
		G	Raymond Mershon Craig III.
		G	Critical Solutions International, Inc.
	20110163	G	Sentinel Capital Partners IV, L.P.
		G	Edward R. Fearon.
		G	Critical Solutions International, Inc.
Transaction Granted Early Termination			
16–NOV–10	20101190	G	Calix, Inc.
		G	Occam Networks, Inc.
		G	Occam Networks, Inc.
	20110081	G	AB SKF.
		G	Harbour Group Investments IV, L.P.
		G	Lincoln Holdings Enterprises, Inc.
	20110131	G	Platinum Equity Capital Partners II, L.P.
		G	American Commercial Lines Inc.
		G	American Commercial Lines Inc.
	20110132	G	WPP plc.
		G	I–Behavior Inc.
		G	I–Behavior Inc.
	20110133	G	Ares Corporate Opportunities Fund III, LP.
		G	Floor and Decor Outlets of America, Inc.
		G	Floor and Decor Outlets of America, Inc.
	20110135	G	Belden Inc.
		G	Thomas & Betts Corporation.
		G	Thomas & Betts Corporation.
		G	Thomas & Betts Inernational, Inc.
	20110138	G	Genesis Energy, L.P.
		G	Valero Energy Corporation.
		G	Valero CHOPS GP. L.L.C.
		G	Valero CHOPS II, L.P.
		G	Valero CHOPS I, L.P.
	20110139	G	2003 TIL Settlement.
		G	Pangea3 Inc.
		G	Pangea3 Inc.
	20110140	G	Essex Rental Corp.
		G	Coast Crane Company.
		G	Coast Crane Company..
	20110145	G	Robbins & Myers, Inc.
		G	T–3 Energy Services, Inc.
		G	T–3 Energy Services, Inc.
	20110146	G	Carlyle Partners V, L.P.
		G	CommScope, Inc.
		G	CommScope, Inc.
	20110150	G	Sprott Inc.
		G	Arthur Richards Rule IV & Bonnie Rule.
Transaction Granted Early Termination			
16–NOV–10	20110150	G	Resource Capital Investment, Corp.
		G	Terra Resources Investment Management, Inc.
		G	RuleInvestments, Inc.
	20110156	G	Tilman J. Fertitta.
		G	Claim Jumper Restaurants, LLC.
		G	Claim Jumper Restaurants, LLC.
	20110167	G	Blackstone Capital Partners (Cayman) V–NQ L.P.
		G	Robert K. Hall.
		G	RK Hall Construction Limited.
		G	SCS Materials, L.P.
		G	Hall Materials, KID.

ET Date	Trans No.	ET req. status	Party name
		G	B&H Contracting, L.P.
		G	RHMB Capital, LLC.
	20110168	G	Blackstone Capital Partners (Cayman) V–NQ L.P.
		G	Mark Buster.
		G	RHMB Capital, LLC.
		G	B&H Contracting, L.P.
		G	SCS Materials, L.P.
		G	RK Hall Construction Limited.
		G	Hall Materials, LTD.
17–NOV–10	20101200	G	Laboratory Corporation of America Holdings.
		G	Genzyme Corporation.
		G	Genzyme Genetic Counseling, LLC.
	20110151	G	General Electric Company.
		G	Clarient, Inc.
		G	Clarient, Inc.
18–NOV–10	20110159	G	Carlyle Partners V, L.P.
		G	Syniverse Holdings, Inc.
		G	Syniverse Holdings, Inc.
	20110160	G	Lion Capital Fund III (USD), L.P.
		G	Bumble Bee Foods, L.P.
		G	Stinson Seafood (2001), Inc.
	20110164	G	Athene Group Ltd.
		G	Royal Bank of Canada.
		G	Liberty Life Insurance Company.

FOR FURTHER INFORMATION CONTACT: Sandra M. Peay, Contact Representative, or Renee Chapman, Contact Representative, Federal Trade Commission, Premerger Notification Office, Bureau of Competition, Room H–303, Washington, DC 20580, (202) 326–3100.

By direction of the Commission.

Donald S. Clark,

Secretary.

[FR Doc. 2010–30806 Filed 12–8–10; 8:45 am]

BILLING CODE 6750–01–M

DEPARTMENT OF HEALTH AND HUMAN SERVICES

Agency for Healthcare Research and Quality

Agency Information Collection Activities: Proposed Collection; Comment Request

AGENCY: Agency for Healthcare Research and Quality, HHS.

ACTION: Notice.

SUMMARY: This notice announces the intention of the Agency for Healthcare Research and Quality (AHRQ) to request that the Office of Management and Budget (OMB) approve the proposed information collection project: "Improving Patient Safety System Implementation for Patients with Limited English Proficiency." In accordance with the Paperwork Reduction Act, 44 U.S.C. 3501–3520, AHRQ invites the public to comment on this proposed information collection.

DATES: Comments on this notice must be received by February 7, 2011.

ADDRESSES: Written comments should be submitted to: Doris Lefkowitz, Reports Clearance Officer, AHRQ, by e-mail at *doris.lefkowitz@AHRQ.hhs.gov.*

Copies of the proposed collection plans, data collection instruments, and specific details on the estimated burden can be obtained from the AHRQ Reports Clearance Officer.

FOR FURTHER INFORMATION CONTACT: Doris Lefkowitz, AHRQ Reports Clearance Officer, (301) 427–1477, or by e-mail at *doris.lefkowitz@AHRQ.hhs.gov.*

SUPPLEMENTARY INFORMATION:

Proposed Project

Improving Patient Safety System Implementation for Patients with Limited English Proficiency

According to the 2009 American Community Survey (U.S. Census Bureau), approximately 57 million people 20% of the U.S. population—speak a language other than English at home. Of that number, approximately 24 million (8.6% of the U.S. population) are defined as having Limited English Proficiency (LEP), meaning that they report speaking English less than "very well". Recent research suggests that adverse events affect LEP patients more severely than they affect English-speaking patients. In addition to linguistic barriers, LEP patients often face cultural barriers to care and low health literacy as well.

AHRQ proposes to develop a new training program to improve patient safety system implementation for patients with limited English proficiency. The new training program is designed as a continuing education module within the TeamSTEPPS system. TeamSTEPPS is an evidence-based framework to optimize team performance across the healthcare delivery system with the goal of improving patient safety. This system has been successfully implemented in numerous hospitals across the United States. The TeamSTEPPS curriculum is an easy-to-use comprehensive multimedia kit that includes modules in text and presentation format, video vignettes to illustrate key concepts, and workshop materials, including a supporting CD and DVD, on change management, coaching, and implementation. Portions of the training module may also be useful for hospitals that have not implemented TeamSTEPPS. The new training module will show how TeamSTEPPS principles can be better implemented to improve the safety of patients with LEP.

AHRQ proposes to field-test this module by conducting case studies of its implementation in three hospitals. The primary goals of this field test are to identify needed changes in the training module content or format to increase the feasibility of implementation and improve module outcomes including audience response, learning, adoption of recommended team behaviors, and improved outcomes for LEP patients. Patient outcome measures for this project include the patient's access to an interpreter and how well they

understood instructions from the hospital staff.

This study is being conducted by AHRQ through its contractor, Abt Associates Inc., pursuant to AHRQ's statutory authority to conduct and support research on healthcare and on systems for the delivery of such care, including activities with respect to the quality, effectiveness, efficiency, appropriateness and value of healthcare services and with respect to quality measurement and improvement. 42 U.S.C. 299a(a)(1) and (2).

Method of Collection

To achieve the goals of this project the following activities will be implemented:

(1) Readiness Assessment Survey of whether a hospital has the right policies in place to implement the training module. The readiness assessment will be completed by the key contact person (hospital champion) at each site. The assessment may be completed in consultation with other members of a "change team" that the hospital champion may form to support the initiative.

(2) Pre-work for Master-Training, including a survey, process map exercise, and a request to locate the hospital's or organization's policy on accessing language services. The pre-work will be completed by one of the hospital staff persons selected to be a Master-Trainer at each site.

(3) Master Training session in which two staff members from each of three participating hospitals will learn how to teach the training module. The TeamSTEPPS system requires at least two trainers for each hospital because its implementation is a team endeavor. Trainers will be selected either by the hospital champion, or by the "change team" formed by the hospital champion to support the intervention. Trainers will be selected from among natural leaders working within the hospital unit where the training will take place. Ideally the team will include a provider (*e.g.,* doctor, nurse) and an interpreter. Hospital staff selected to attend the training will be required to travel to Boston for the training session.

(4) Staff Training session using the training module developed for this project. Training participants will be drawn from the interprofessional care team in one or more hospital units (*e.g.,* ob/gyn, surgery, etc.). This team may include nurses, physicians, technicians, front desk staff, and interpreters. Since the training teaches team behaviors, the entire interprofessional care team in a given hospital unit will be asked to attend the training session together. The training will be conducted onsite by the hospital staff members who attended the Master Training.

(5) Training Participant Satisfaction Survey to assess trainee satisfaction with, and perceived adequacy of, the training module. This questionnaire will be administered at the end of the training module.

(6) Learning Outcomes Survey to assess staff knowledge about the best way to handle situations with LEP patients. To measure the change in staff knowledge resulting from the training module this questionnaire will be administered both before and after the training.

(7) Pre-training Behavior Survey to assess trainee behavior change resulting from the training. The behavior measured by this survey is the hospital staffs' use of interpreters when interacting with LEP patients. To measure the change in staff behavior resulting from the training module, questions from this survey are repeated in the post-training behavior survey. Interpreters are exempt from this questionnaire because the questions relate to interpreter use.

(8) Post-Training Behavior Survey to assess trainee use of interpreters when interacting with LEP patients (repeated from the Pre-Training Behavior Survey) and questions to assess the use of team communication tools demonstrated during the training.

(9) Patient Outcome Survey to measure change in patient communication and safety outcomes resulting from the training. This survey's target audience is all patients identified as LEP. The purpose of this survey is to measure intermediate outcomes related to LEP patients' access to language services, comprehension, and satisfaction with services.

(10) Semi-Structured Follow-Up Interview to assess hospitals' experiences implementing the training module. This semi-structured interview's target audience consists of up to two master-trainers or change team members in each hospital where the training module is implemented. These interviews will be conducted 3 times at the 2-week, 6-week and 10-week mark after the training.

(11) Semi-Structured Site Visit Interview to assess the hospitals' experiences implementing the training module. This semi-structured interview's target audience consists of up to 6 persons who may include master-trainers, change team members, frontline staff members, or other persons designated by the "hospital champion" as persons who might provide insight into module implementation and outcomes. These interviews will be conducted 3 months after the training.

Estimated Annual Respondent Burden

Exhibit 1 presents estimates of the reporting burden hours for this one-year data collection process. Time estimates are based on experience with similar instruments used with comparable respondents. The Readiness Assessment Survey will be completed by the key contact/project champion at each of the 3 participating hospitals and will take about 5 minutes. The pre-work for the Master-Training will be completed by the two trainers selected for each site and will take about 30 minutes. The Master-Training will be conducted with 2 staff members from each hospital and will last 4½ hours; the burden estimate of 12.5 hours includes 8 hours of travel time to and from the training site. Staff Training will include up to 30 staff members at each hospital (plus the 2 trainers who are staff members) and will last 1 hour. The Training Participant Satisfaction Survey will be completed by Staff Training participants at the end of the training and takes 5 minutes to complete. The Learning Outcomes Survey will be administered twice, before and after the training, and will require 10 minutes. The Pre-Training Behavior Survey will be administered to all staff invited to the training except for interpreters. It will require approximately 5 minutes. Interpreters do not complete this questionnaire because the questions relate to interpreter use. The Post-training Behavior survey will be administered two or more weeks after the training to all staff who were invited to the training, and will take approximately 7.5 minutes to complete. The Patient Outcome Survey will be administered twice, before and after the intervention, to a sample of approximately 90 patients (30 from each of the 3 participating hospitals) and requires about 10 minutes to complete. Semi-Structured Follow-up interviews will be conducted three times over a 12-week period with two master trainers or change team members from each hospital. Each semi-structured follow-up interview will last for about an hour. Semi-Structured Site visit interviews will be conducted with 6 staff members from each hospital and will take an hour to complete. The total annualized burden hours are estimated to be 295 hours.

Exhibit 2 presents the estimated annualized cost burden associated with the respondents' time to participate in this research. The total cost burden is estimated to be about $6,980.

EXHIBIT 1—ESTIMATED ANNUALIZED BURDEN HOURS

Data collection method	Number of respondents	Number of responses per respondent	Hours per response	Total burden hours
Readiness Assessment Survey	3	1	5/60	0.25
Pre-Work for Master-Training	3	2	30/60	3
Train the Trainer Training	3	2	12.5	75
Staff Training	3	32	1	96
Training Participant Satisfaction Survey	3	30	5/60	8
Learning Outcomes Survey	3	60	10/60	30
Pre-Training Behavior Survey	3	25	5/60	6
Post-training Behavior Survey	3	30	7.5/60	11
Patient Outcome Survey	90	2	10/60	30
Semi-Structured Follow-Up Interview	3	6	1	18
Semi-Structured Site Visit Interview	3	6	1	18
Totals	117	na	na	295

EXHIBIT 2—ESTIMATED ANNUALIZED COST BURDEN

Data collection method	Number of respondents	Total burden hours	Average hourly wage rate*	Total cost burden
Readiness Assessment Survey	3	0.25	$26.50	$7
Pre-Work for Master-Training	3	3	26.50	80
Train the Trainer Training	3	75	26.50	1,988
Staff Training	3	96	22.02	2,114
Training Participant Satisfaction Survey	3	8	22.02	176
Learning Outcomes Survey	3	30	22.02	661
Pre-training Behavior Survey	3	6	22.04	132
Post-training Behavior Survey	3	11	22.02	242
Patient Outcome Survey	90	30	20.90	627
Semi-Structured Follow-Up Interview	3	18	26.50	477
Semi-Structured Site Visit Interview	3	18	26.50	477
Totals	117	295	na	6,980

*The average hourly wage rate for readiness assessments, train-the-trainer trainings, semi-structured site visit interviews, and semi-structured follow-up interviews was calculated based on the average of the mean hourly wage rate for healthcare practitioners and medical occupations (all professions), $31.02 and the average hourly wage rate for interpreters and translators, $21.97. The average hourly rate for staff receiving training was calculated based on the average of the mean hourly wage rate for healthcare practitioners and medical occupations (all professions), $31.02, mean hourly wage rate for interpreters and translators, $21.97, and mean hourly wage rate for healthcare support occupations, $13.06. The average hourly wage rate for respondents to the pre-training behavior survey was calculated based on the average of the mean hourly wage rate for healthcare practitioners and medical occupations (all professions), $31.02, and mean hourly wage rate for healthcare support occupations, $13.06. The average hourly wage rate for patients was calculated on the mean hourly wage rate for all occupations. Average hourly rate for unit staff, non-interpreter was calculated based on the average of the mean hourly rate for healthcare practitioners and medical occupations (all professions), $31.02, and occupations (all professions), $31.02, mean hourly wage rate for interpreters and translators, $21.97, and mean hourly wage rate for healthcare support occupations, $13.06. Mean hourly wage rates for these groups of occupations were obtained from the Bureau of Labor Statistics on "Occupational Employment and Wages, May 2009" found at the following urls: *http://www.bls.gov/oes/current/naics4_622100.htm, http://www.bls.gov/oes/current/oes273091.htm http://www.bls.gov/oes/current/oes_nat.htm.*

Estimated Annual Costs to the Federal Government

The total cost of this contract to the government is $499,978. The project extends over 4 fiscal years, although data collection will take place over the course of a single year. Exhibit 3 shows a breakdown of the total cost as well as the annualized cost for the data collection, processing and analysis activity.

EXHIBIT 3—ESTIMATED COST

Cost component	Total cost	Annual cost
Project Development	$301,664	$75,416
Data Collection Activities	52,629	13,157
Data Processing and Analysis	52,629	13,157
Publication of Results	51,658	12,915
Project Management	41,399	10,350
Total	499,978	124,995

Request for Comments

In accordance with the above-cited Paperwork Reduction Act legislation, comments on AHRQ's information collection are requested with regard to any of the following: (a) Whether the proposed collection of information is necessary for the proper performance of AHRQ healthcare research and healthcare information dissemination functions, including whether the information will have practical utility; (b) the accuracy of AHRQ's estimate of burden (including hours and costs) of the proposed collection(s) of information; (c) ways to enhance the quality, utility, and clarity of the information to be collected; and (d) ways to minimize the burden of the collection of information upon the respondents, including the use of automated collection techniques or other forms of information technology.

Comments submitted in response to this notice will be summarized and included in the Agency's subsequent request for OMB approval of the proposed information collection. All comments will become a matter of public record.

Dated: November 30, 2010.

Carolyn M. Clancy,

Director.

[FR Doc. 2010–30902 Filed 12–8–10; 8:45 am]

BILLING CODE 4160–90–M

DEPARTMENT OF HEALTH AND HUMAN SERVICES

Food and Drug Administration

[Docket No. FDA–2010–E–0047]

Determination of Regulatory Review Period for Purposes of Patent Extension; ILARIS

AGENCY: Food and Drug Administration, HHS.

ACTION: Notice.

SUMMARY: The Food and Drug Administration (FDA) has determined the regulatory review period for ILARIS and is publishing this notice of that determination as required by law. FDA has made the determination because of the submission of an application to the Director of Patents and Trademarks, Department of Commerce, for the extension of a patent which claims that human biological product.

ADDRESSES: Submit electronic comments to *http://www.regulations.gov.* Submit written petitions along with three copies and written comments to the Division of Dockets Management (HFA–305), Food and Drug Administration, 5630 Fishers Lane, rm. 1061, Rockville, MD 20852.

FOR FURTHER INFORMATION CONTACT: Beverly Friedman, Office of Regulatory Policy, Food and Drug Administration, 10903 New Hampshire Ave., Bldg. 51, rm. 6222, Silver Spring, MD 20993–0002 301–796–3602.

SUPPLEMENTARY INFORMATION: The Drug Price Competition and Patent Term Restoration Act of 1984 (Pub. L. 98–417) and the Generic Animal Drug and Patent Term Restoration Act (Pub. L. 100–670) generally provide that a patent may be extended for a period of up to 5 years so long as the patented item (human drug product, animal drug product, medical device, food additive, or color additive) was subject to regulatory review by FDA before the item was marketed. Under these acts, a product's regulatory review period forms the basis for determining the amount of extension an applicant may receive.

A regulatory review period consists of two periods of time: A testing phase and an approval phase. For human biological products, the testing phase begins when the exemption to permit the clinical investigations of the biological becomes effective and runs until the approval phase begins. The approval phase starts with the initial submission of an application to market the human biological product and continues until FDA grants permission to market the biological product. Although only a portion of a regulatory review period may count toward the actual amount of extension that the Director of Patents and Trademarks may award (for example, half the testing phase must be subtracted as well as any time that may have occurred before the patent was issued), FDA's determination of the length of a regulatory review period for a human biological product will include all of the testing phase and approval phase as specified in 35 U.S.C. 156(g)(1)(B).

FDA recently approved for marketing the human biologic product ILARIS (canakinumab). ILARIS is indicated for the treatment of Cryopyrin Associated Periodic Syndromes in adults and children 4 years of age and older including Familial Cold Autoinflammatory Syndrome and Muckle-Wells Syndrome. Subsequent to this approval, the Patent and Trademark Office received a patent term restoration application for ILARIS (U.S. Patent No. 7,446,175) from Novartis AG, and the Patent and Trademark Office requested FDA's assistance in determining this patent's eligibility for patent term restoration. In a letter dated March 24, 2010, FDA advised the Patent and Trademark Office that this human biological product had undergone a regulatory review period and that the approval of ILARIS represented the first permitted commercial marketing or use of the product. Thereafter, the Patent and Trademark Office requested that FDA determine the product's regulatory review period.

FDA has determined that the applicable regulatory review period for ILARIS is 1,072 days. Of this time, 889 days occurred during the testing phase of the regulatory review period, while 183 days occurred during the approval phase. These periods of time were derived from the following dates:

1. *The date an exemption under section 505(i) of the Federal Food, Drug, and Cosmetic Act (21 U.S.C. 355(i)) became effective:* July 13, 2006. The applicant claims July 12, 2006, as the date the investigational new drug application (IND) became effective. However, FDA records indicate that the IND effective date was July 13, 2006, which was 30 days after FDA receipt of the IND.

2. *The date the application was initially submitted with respect to the human biological product under section 351 of the Public Health Service Act (42 U.S.C. 262:* December 17, 2008. The applicant claims December 15, 2008, as the date the biologics license application (BLA) for ILARIS (BLA 125319) was initially submitted. However, FDA records indicate that BLA 125319 was submitted on December 17, 2008.

3. *The date the application was approved:* June 17, 2009. FDA has verified the applicant's claim that BLA 125319 was approved on June 17, 2009.

This determination of the regulatory review period establishes the maximum potential length of a patent extension. However, the U.S. Patent and Trademark Office applies several statutory limitations in its calculations of the actual period for patent extension. In its application for patent extension, this applicant seeks 177 days of patent term extension.

Anyone with knowledge that any of the dates as published are incorrect may submit to the Division of Dockets Management (*see* **ADDRESSES**) either electronic or written comments and ask for a redetermination by February 7, 2011. Furthermore, any interested person may petition FDA for a determination regarding whether the applicant for extension acted with due diligence during the regulatory review period by June 7, 2011. To meet its burden, the petition must contain sufficient facts to merit an FDA

investigation. (*See* H. Rept. 857, part 1, 98th Cong., 2d sess., pp. 41–42, 1984.) Petitions should be in the format specified in 21 CFR 10.30.

Interested persons may submit to the Division of Dockets Management (**SEE ADDRESSES**) electronic or written comments and written petitions. It is only necessary to send one set of comments. It is no longer necessary to send three copies of mailed comments.

However, if you submit a written petition, you must submit three copies of the petition. Identify comments with the docket number found in brackets in the heading of this document. Comments and petitions that have not been made publicly available on regulations.gov may be viewed in the Division of Dockets Management between 9 a.m. and 4 p.m., Monday through Friday.

Dated: October 22, 2010.

Jane A. Axelrad,

Associate Director for Policy, Center for Drug Evaluation and Research.

[FR Doc. 2010–30992 Filed 12–8–10; 8:45 am]

BILLING CODE 4160–01–P

DEPARTMENT OF HEALTH AND HUMAN SERVICES

Food and Drug Administration

[Docket No. FDA–2010–E–0044]

Determination of Regulatory Review Period for Purposes of Patent Extension; BEPREVE

AGENCY: Food and Drug Administration, HHS.

ACTION: Notice.

SUMMARY: The Food and Drug Administration (FDA) has determined the regulatory review period for BEPREVE and is publishing this notice of that determination as required by law. FDA has made the determination because of the submission of an application to the Director of Patents and Trademarks, Department of Commerce, for the extension of a patent which claims that human drug product.

ADDRESSES: Submit electronic comments to *http://www.regulations.gov.* Submit written petitions along with three copies and written comments to the Division of Dockets Management (HFA–305), Food and Drug Administration, 5630 Fishers Lane, rm. 1061, Rockville, MD 20852.

FOR FURTHER INFORMATION CONTACT: Beverly Friedman, Office of Regulatory Policy, Food and Drug Administration, 10903 New Hampshire Ave., Bldg. 51, rm. 6222, Silver Spring, MD 20993–0002, 301–796–3602.

SUPPLEMENTARY INFORMATION: The Drug Price Competition and Patent Term Restoration Act of 1984 (Pub. L. 98–417) and the Generic Animal Drug and Patent Term Restoration Act (Pub. L. 100–670) generally provide that a patent may be extended for a period of up to 5 years so long as the patented item (human drug product, animal drug product, medical device, food additive, or color additive) was subject to regulatory review by FDA before the item was marketed. Under these acts, a product's regulatory review period forms the basis for determining the amount of extension an applicant may receive.

A regulatory review period consists of two periods of time: A testing phase and an approval phase. For human drug products, the testing phase begins when the exemption to permit the clinical investigations of the drug becomes effective and runs until the approval phase begins. The approval phase starts with the initial submission of an application to market the human drug product and continues until FDA grants permission to market the drug product. Although only a portion of a regulatory review period may count toward the actual amount of extension that the Director of Patents and Trademarks may award (for example, half the testing phase must be subtracted as well as any time that may have occurred before the patent was issued), FDA's determination of the length of a regulatory review period for a human drug product will include all of the testing phase and approval phase as specified in 35 U.S.C. 156(g)(1)(B).

FDA recently approved for marketing the human drug product BEPREVE (bepotastine besilate). BEPREVE is indicated for the treatment of itching associated with allergic conjunctivitis. Subsequent to this approval, the Patent and Trademark Office received a patent term restoration application for BEPREVE (U.S. Patent No. 6,780,877) from Ube Industries, Ltd., and the Patent and Trademark Office requested FDA's assistance in determining this patent's eligibility for patent term restoration. In a letter dated March 3, 2010, FDA advised the Patent and Trademark Office that this human drug product had undergone a regulatory review period and that the approval of BEPREVE represented the first permitted commercial marketing or use of the product. Thereafter, the Patent and Trademark Office requested that FDA determine the product's regulatory review period.

FDA has determined that the applicable regulatory review period for BEPREVE is 964 days. Of this time, 663 days occurred during the testing phase of the regulatory review period, while 301 days occurred during the approval phase. These periods of time were derived from the following dates:

1. *The date an exemption under section 505(i) of the Federal Food, Drug, and Cosmetic Act (the FD & C Act) (21 U.S.C. 355(i)) became effective:* January 20, 2007. The applicant claims January 19, 2007, as the date the investigational new drug application (IND) became effective. However, FDA records indicate that the IND effective date was January 20, 2007, which was 30 days after FDA receipt of the IND.

2. *The date the application was initially submitted with respect to the human drug product under section 505(b) of the FD & C Act:* November 12, 2008. FDA has verified the applicant's claim that the new drug application (NDA) 22–288 was submitted on November 12, 2008.

3. *The date the application was approved:* September 8, 2009. FDA has verified the applicant's claim that NDA 22–288 was approved on September 8, 2009.

This determination of the regulatory review period establishes the maximum potential length of a patent extension. However, the U.S. Patent and Trademark Office applies several statutory limitations in its calculations of the actual period for patent extension. In its application for patent extension, this applicant seeks 631 days of patent term extension.

Anyone with knowledge that any of the dates as published are incorrect may submit to the Division of Dockets Management (*see* **ADDRESSES**) either electronic or written comments and ask for a redetermination by February 7, 2011. Furthermore, any interested person may petition FDA for a determination regarding whether the applicant for extension acted with due diligence during the regulatory review period by June 7, 2011. To meet its burden, the petition must contain sufficient facts to merit an FDA investigation. (See H. Rept. 857, part 1, 98th Cong., 2d sess., pp. 41–42, 1984.) Petitions should be in the format specified in 21 CFR 10.30.

Interested persons may submit to the Division of Dockets Management (*see* **ADDRESSES**) electronic or written comments and written petitions. It is only necessary to send one set of comments. It is no longer necessary to send three copies of mailed comments. However, if you submit a written petition, you must submit three copies

of the petition. Identify comments with the docket number found in brackets in the heading of this document. Comments and petitions that have not been made publicly available on regulations.gov may be viewed in the Division of Dockets Management between 9 a.m. and 4 p.m., Monday through Friday.

Dated: October 22, 2010.

Jane A. Axelrad,

Associate Director for Policy, Center for Drug Evaluation and Research.

[FR Doc. 2010–30991 Filed 12–8–10; 8:45 am]

BILLING CODE 4160–01–P

DEPARTMENT OF HEALTH AND HUMAN SERVICES

Food and Drug Administration

[Docket No. FDA–2010–E–0021]

Determination of Regulatory Review Period for Purposes of Patent Extension; SABRIL

AGENCY: Food and Drug Administration, HHS.

ACTION: Notice.

SUMMARY: The Food and Drug Administration (FDA) has determined the regulatory review period for SABRIL and is publishing this notice of that determination as required by law. FDA has made the determination because of the submission of an application to the Director of Patents and Trademarks, Department of Commerce, for the extension of a patent which claims that human drug product.

ADDRESSES: Submit electronic comments to *http://www.regulations.gov*. Submit written petitions along with three copies and written comments to the Division of Dockets Management (HFA–305), Food and Drug Administration, 5630 Fishers Lane, rm. 1061, Rockville, MD 20852.

FOR FURTHER INFORMATION CONTACT: Beverly Friedman, Office of Regulatory Policy, Food and Drug Administration, 10903 New Hampshire Ave., Bldg. 51, rm. 6222, Silver Spring, MD 20993–0002, 301–796–3602.

SUPPLEMENTARY INFORMATION: The Drug Price Competition and Patent Term Restoration Act of 1984 (Pub. L. 98–417) and the Generic Animal Drug and Patent Term Restoration Act (Pub. L. 100–670) generally provide that a patent may be extended for a period of up to 5 years so long as the patented item (human drug product, animal drug product, medical device, food additive, or color additive) was subject to regulatory review by FDA before the item was marketed. Under these acts, a product's regulatory review period forms the basis for determining the amount of extension an applicant may receive.

A regulatory review period consists of two periods of time: A testing phase and an approval phase. For human drug products, the testing phase begins when the exemption to permit the clinical investigations of the drug becomes effective and runs until the approval phase begins. The approval phase starts with the initial submission of an application to market the human drug product and continues until FDA grants permission to market the drug product. Although only a portion of a regulatory review period may count toward the actual amount of extension that the Director of Patents and Trademarks may award (for example, half the testing phase must be subtracted as well as any time that may have occurred before the patent was issued), FDA's determination of the length of a regulatory review period for a human drug product will include all of the testing phase and approval phase as specified in 35 U.S.C. 156(g)(1)(B).

FDA recently approved for marketing the human drug product SABRIL (vigabatrin). SABRIL is indicated for refractory complex partial seizures in adults. It should be used as adjunctive therapy in patients who have responded inadequately to several alternative treatments. Subsequent to this approval, the Patent and Trademark Office received a patent term restoration application for SABRIL (U.S. Patent No. 5,380,936) from Lundbeck, Inc., and the Patent and Trademark Office requested FDA's assistance in determining this patent's eligibility for patent term restoration. In a letter dated May 10, 2010, FDA advised the Patent and Trademark Office that this human drug product had undergone a regulatory review period and that the approval of SABRIL represented the first permitted commercial marketing or use of the product. Thereafter, the Patent and Trademark Office requested that FDA determine the product's regulatory review period.

FDA has determined that the applicable regulatory review period for SABRIL is 10,205 days. Of this time, 4,614 days occurred during the testing phase of the regulatory review period, while 5,591 days occurred during the approval phase. These periods of time were derived from the following dates:

1. *The date an exemption under section 505(i) of the Federal Food, Drug, and Cosmetic Act (the FFD&C act) (21 U.S.C. 355(i)) became effective:* September 14, 1981. FDA has verified the applicant's claim that the date the investigational new drug application became effective was on September 14, 1981.

2. *The date the application was initially submitted with respect to the human drug product under section 505(b) of the FFD&C act:* May 2, 1994. The applicant claims April 29, 1994, as the date the first new drug application (NDA) for SABRIL (NDA 20–427) was initially submitted. However, FDA records indicate that NDA 20–427 was submitted on May 2, 1994.

3. *The date the application was approved:* August 21, 2009. FDA has verified the applicant's claims that NDA 20–427 (vigabatrin tablets) and NDA 22–006 (vigabatrin powder for oral solution) were approved on August 21, 2009.

This determination of the regulatory review period establishes the maximum potential length of a patent extension. However, the U.S. Patent and Trademark Office applies several statutory limitations in its calculations of the actual period for patent extension. In its application for patent extension, this applicant seeks 5 years of patent term extension.

Anyone with knowledge that any of the dates as published are incorrect may submit to the Division of Dockets Management (*see* **ADDRESSES**) either electronic or written comments and ask for a redetermination by February 7, 2011. Furthermore, any interested person may petition FDA for a determination regarding whether the applicant for extension acted with due diligence during the regulatory review period by June 7, 2011. To meet its burden, the petition must contain sufficient facts to merit an FDA investigation. (See H. Rept. 857, part 1, 98th Cong., 2d sess., pp. 41–42, 1984.) Petitions should be in the format specified in 21 CFR 10.30.

Interested persons may submit to the Division of Dockets Management (*see* **ADDRESSES**) electronic or written comments and written petitions. It is only necessary to send one set of comments. It is no longer necessary to send three copies of mailed comments. However, if you submit a written petition, you must submit three copies of the petition. Identify comments with the docket number found in brackets in the heading of this document.

Comments and petitions that have not been made publicly available on regulations.gov may be viewed in the Division of Dockets Management between 9 a.m. and 4 p.m., Monday through Friday.

Dated: October 22, 2010.

Jane A. Axelrad,

Associate Director for Policy, Center for Drug Evaluation and Research.

[FR Doc. 2010–30995 Filed 12–8–10; 8:45 am]

BILLING CODE 4160–01–P

DEPARTMENT OF HEALTH AND HUMAN SERVICES

National Institutes of Health

National Institute of Mental Health; Notice of Meeting

Pursuant to section 10(d) of the Federal Advisory Committee Act, as amended (5 U.S.C. App.), notice is hereby given of a meeting of the National Advisory Mental Health Council.

The meeting will be open to the public as indicated below, with attendance limited to space available. Individuals who plan to attend and need special assistance, such as sign language interpretation or other reasonable accommodations, should notify the Contact Person listed below in advance of the meeting.

The meeting will be closed to the public in accordance with the provisions set forth in sections 552b(c)(4) and 552b(c)(6), Title 5 U.S.C., as amended. The grant applications and the discussions could disclose confidential trade secrets or commercial property such as patentable material, and personal information concerning individuals associated with the grant applications, the disclosure of which would constitute a clearly unwarranted invasion of personal privacy.

Name of Committee: National Advisory Mental Health Council.

Date: January 13–14, 2011.

Closed: January 13, 2011, 11 a.m. to 5 p.m.

Agenda: To review and evaluate grant applications.

Place: National Institutes of Health, Neuroscience Center, 6001 Executive Boulevard, Conference Room C/D/E, Rockville, MD 20852.

Open: January 14, 2011, 8:30 a.m. to 12:30 p.m.

Agenda: Presentation of NIMH Director's report and discussion on NIMH program and policy issues.

Place: National Institutes of Health, Building 31, C Wing, 31 Center Drive, 6th Floor, Conference Room 6, Bethesda, MD 20892.

Contact Person: Jane A. Steinberg, Ph.D., Director, Division of Extramural Activities, National Institute of Mental Health, NIH, Neuroscience Center, 6001 Executive Blvd., Room 6154, MSC 9609, Bethesda, MD 20892–9609, 301–443–5047.

Any member of the public interested in presenting oral comments to the committee may notify the Contact Person listed on this notice at least 10 days in advance of the meeting. Interested individuals and representatives of organizations may submit a letter of intent, a brief description of the organization represented, and a short description of the oral presentation. Only one representative of an organization may be allowed to present oral comments and if accepted by the committee, presentations may be limited to five minutes. Both printed and electronic copies are requested for the record. In addition, any interested person may file written comments with the committee by forwarding their statement to the Contact Person listed on this notice. The statement should include the name, address, telephone number and when applicable, the business or professional affiliation of the interested person.

In the interest of security, NIH has instituted stringent procedures for entrance onto the NIH campus. All visitor vehicles, including taxicabs, hotel, and airport shuttles will be inspected before being allowed on campus. Visitors will be asked to show one form of identification (for example, a government-issued photo ID, driver's license, or passport) and to state the purpose of their visit.

Information is also available on the Institute's/Center's home page: *http://www.nimh.nih.gov/about/advisory-boards-and-groups/namhc/index.shtml*, where an agenda and any additional information for the meeting will be posted when available.

(Catalogue of Federal Domestic Assistance Program Nos. 93.242, Mental Health Research Grants; 93.281, Scientist Development Award, Scientist Development Award for Clinicians, and Research Scientist Award; 93.282, Mental Health National Research Service Awards for Research Training, National Institutes of Health, HHS)

Dated: December 3, 2010.

Jennifer S. Spaeth,

Director, Office of Federal Advisory Committee Policy.

[FR Doc. 2010–30963 Filed 12–8–10; 8:45 am]

BILLING CODE 4140–01–P

DEPARTMENT OF HEALTH AND HUMAN SERVICES

National Institutes of Health

Center for Scientific Review; Notice of Closed Meeting

Pursuant to section 10(d) of the Federal Advisory Committee Act, as amended (5 U.S.C. App.), notice is hereby given of the following meeting.

The meeting will be closed to the public in accordance with the provisions set forth in sections 552b(c)(4) and 552b(c)(6), Title 5 U.S.C., as amended. The grant applications and the discussions could disclose confidential trade secrets or commercial property such as patentable material, and personal information concerning individuals associated with the grant applications, the disclosure of which would constitute a clearly unwarranted invasion of personal privacy.

Name of Committee: Center for Scientific Review Special Emphasis Panel; Member Conflict: NIH Exploratory Developmental Research Grant Program In Urology.

Date: December 22, 2010.

Time: 11 a.m. to 1 p.m.

Agenda: To review and evaluate grant applications.

Place: National Institutes of Health, 6701 Rockledge Drive, Bethesda, MD 20892 (Telephone Conference Call).

Contact Person: Mushtaq A. Khan, DVM, PhD, Scientific Review Officer, Center for Scientific Review, National Institutes of Health, 6701 Rockledge Drive, Room 2176, MSC 7818, Bethesda, MD 20892, 301–435–1778, *khanm@csr.nih.gov*.

This notice is being published less than 15 days prior to the meeting due to the timing limitations imposed by the review and funding cycle.

(Catalogue of Federal Domestic Assistance Program Nos. 93.306, Comparative Medicine; 93.333, Clinical Research, 93.306, 93.333, 93.337, 93.393–93.396, 93.837–93.844, 93.846–93.878, 93.892, 93.893, National Institutes of Health, HHS)

Dated: December 3, 2010.

Jennifer S. Spaeth,

Director, Office of Federal Advisory Committee Policy.

[FR Doc. 2010–30961 Filed 12–8–10; 8:45 am]

BILLING CODE 4140–01–P

DEPARTMENT OF HOMELAND SECURITY

Coast Guard

[Docket No. USCG–2010–1085]

Detecting Oil Leaks From Vessels Into the Water

AGENCY: Coast Guard, DHS.

ACTION: Notice and request for information.

SUMMARY: In section 707 of the Coast Guard Authorization Act of 2010, Congress directs the Secretary of the Department in which the Coast Guard is operating to report on the availability, feasibility, and potential cost of technology to detect the loss of oil carried as cargo or as fuel on tank and non-tank vessels greater than 400 gross

tons. Through this Notice, the Coast Guard seeks information about the current state of technology to detect loss of oil into the water.

DATES: Comments and related material must either be submitted to our online docket via *http://www.regulations.gov* on or before January 24, 2011 or reach the Docket Management Facility by that date.

ADDRESSES: You may submit comments identified by docket number USCG–2010–1085 using any one of the following methods:

(1) *Federal eRulemaking Portal: http://www.regulations.gov.*

(2) *Fax:* 202–493–2251.

(3) *Mail:* Docket Management Facility (M–30), U.S. Department of Transportation, West Building Ground Floor, Room W12–140, 1200 New Jersey Avenue, SE., Washington, DC 20590–0001.

(4) *Hand delivery:* Same as mail address above, between 9 a.m. and 5 p.m., Monday through Friday, except Federal holidays. The telephone number is 202–366–9329.

To avoid duplication, please use only one of these four methods. *See* the "Public Participation and Request for Comments" portion of the **SUPPLEMENTARY INFORMATION** section below for instructions on submitting comments.

FOR FURTHER INFORMATION CONTACT: If you have questions on this notice, call or e-mail Mrs. Dolores Mercier, U.S. Coast Guard Office of Design and Engineering Standards; telephone 202–372–1485, e-mail *Dolores.P.Mercier@uscg.mil.* If you have questions on viewing or submitting material to the docket, call Renee V. Wright, Program Manager, Docket Operations, telephone 202–366–9826.

SUPPLEMENTARY INFORMATION:

Public Participation and Request for Comments

We encourage you to submit information about the current state of technology to detect loss of oil into the water. All information received will be posted, without change, to *http://www.regulations.gov* and will include any personal information you have provided.

Submitting comments: If you submit material, please include the docket number for this notice (USCG–2010–1085). You may submit your material online, or by fax, mail or hand delivery, but please use only one of these means. We recommend that you include your name and a mailing address, an e-mail address, or a telephone number in the body of your document so that we can contact you if we have questions regarding your submission.

To submit your material online, go to *http://www.regulations.gov,* click on the "submit a comment" box, which will then become highlighted in blue. In the "Document Type" drop down menu select "Notices" and insert "USCG–2010–1085" in the "Keyword" box. Click "Search" then click on the balloon shape in the "Actions" column. If you submit information by mail or hand delivery, submit them in an unbound format, no larger than 8½ by 11 inches, suitable for copying and electronic filing. If you submit them by mail and would like to know that they reached the Facility, please enclose a stamped, self-addressed postcard or envelope.

Viewing the comments: To view the comments, go to *http://www.regulations.gov,* click on the "read comments" box, which will then become highlighted in blue. In the "Keyword" box insert "USCG–2010–1085" and click "Search." Click the "Open Docket Folder" in the "Actions" column. If you do not have access to the internet, you may view the docket online by visiting the Docket Management Facility in Room W12–140 on the ground floor of the Department of Transportation West Building, 1200 New Jersey Avenue, SE., Washington, DC 20590, between 9 a.m. and 5 p.m., Monday through Friday, except Federal holidays. We have an agreement with the Department of Transportation to use the Docket Management Facility.

Privacy Act: Anyone can search the electronic form of comments received into any of our dockets by the name of the individual submitting the comment (or signing the comment, if submitted on behalf of an association, business, labor union, *etc.*). You may review a Privacy Act system of records notice regarding our public dockets in the January 17, 2008, issue of the **Federal Register** (73 FR 3316).

Background and Purpose

The purpose of a device to detect loss of oil from a vessel into the water is to reduce the size and impact of an oil spill by alerting the vessel's crew to take action to minimize the impact. However, these devices will not stop the outflow of oil into the water.

Between October 2004 and October 2005, the Coast Guard conducted a study of technology used to detect the loss of oil from oil cargo tanks into the water. As part of this study, we reviewed technologies used to monitor the level of oil from inside the cargo tank and to detect pollution from outside the tank. Devices inside the tank include liquid level gauges typically employed for monitoring cargo during transfer operations. Devices outside the tank include oil/water interface sensors that, theoretically, would be deployed around a vessel or towed astern to detect oil in the water. In both cases, we found that existing technologies did not fit the performance expectations of a device that could detect the loss of oil from a vessel underway in a dynamic marine environment. This study can be found in docket number USCG–2001–9046.

The Coast Guard seeks information about new technology that was not considered in the 2005 study. We are particularly interested in information that includes details about the:

—Physical principles of operation of the device;
—Degree of experience with actual usage of the device;
—Performance and limitations of the device;
—Power requirements for the device; and
—Capacity to operate in a dynamic environment, including an explosive atmosphere.

Please consider the following questions when responding to this notice and request for information:

(A) What new technology exists to detect the loss of oil into the water?

(B) What is the availability of such technology?

(C) What are the costs of installation and maintenance of such technology?

(D) What methods or equipment are currently under development that may be able to detect leaks from oil tanks into the water?

(E) What is the threshold for detection, accuracy, sensitivity, and reliability in both the static and dynamic conditions found on moving vessels?

(F) How is the crew alerted?

(G) Do the methods or types of equipment discussed in this rulemaking have uses other than leak detection from oil cargo tanks into the water?

(H) Are methods or equipment being applied for similar purposes in other industries (*e.g.,* the aerospace, rail, military, or over-the-road truck industries) that merit investigation for use aboard vessels?

We will review and analyze all information received in preparation for the development of the required report on the availability of technology to detect the loss of oil carried as cargo or as fuel on tank and non-tank vessels greater than 400 gross tons.

Authority

This notice is issued under authority of 5 U.S.C. 552(a).

Dated: December 2, 2010.

F.J. Sturm,

U.S. Coast Guard, Deputy Director of Commercial Regulations and Standards.

[FR Doc. 2010–30929 Filed 12–8–10; 8:45 am]

BILLING CODE 9110–04–P

DEPARTMENT OF HOMELAND SECURITY

Federal Emergency Management Agency

[Docket ID FEMA–2008–0009]

National Disaster Housing Task Force

AGENCY: Federal Emergency Management Agency, DHS.

ACTION: Notice of Meeting.

SUMMARY: The National Disaster Housing Task Force (NDHTF) will meet by teleconference on December 15, 2010. At the meeting, the members will report on their work since the October 13, 2010 meeting and discuss the status of the NDHTF's Concept of Operations document. This meeting will be open to the public via a teleconference line.

DATES: The teleconference will take place on December 15, 2010, from 1 p.m. EST to 2:00 p.m. EST. Comments must be submitted by December 17, 2010.

ADDRESSES: Members of the public who wish to obtain the call-in number, access code, and other information for listening to or participating in the public teleconference should contact Mitchell Wyllins as listed under the **FOR FURTHER INFORMATION CONTACT** caption by December 14, 2010. Comments must be identified by Docket ID FEMA–2008–0009 and may be submitted by any *one* of the following methods:

Federal Rulemaking Portal: http://www.regulations.gov. Follow the instructions for submitting comments.

Facsimile: (703) 483–2999.

Mail: Office of Chief Counsel, Federal Emergency Management Agency, Room 835, 500 C Street, SW., Washington, DC 20472–3100.

Hand Delivery/Courier: Office of Chief Counsel, Federal Emergency Management Agency, Room 835, 500 C Street, SW., Washington, DC 20472–3100.

Instructions: All submissions received must include the Docket ID FEMA–2008–0009. Comments will be posted without alteration at *http://www.regulations.gov,* including any personal information provided.

Docket: For access to the docket to read documents or comments received by the NDHTF, go to *http://www.regulations.gov.*

FOR FURTHER INFORMATION CONTACT: Mitchell Wyllins, National Disaster Housing Task Force, 500 C Street, SW., (Room 428), Washington, DC 20472–3100, telephone 202–646–3173, and e-mail *mailto: NDHTF@dhs.gov.*

SUPPLEMENTARY INFORMATION: The NDHTF will meet for the purpose of reviewing the progress of the NDHTF's Concept of Operations, which was released for public comment.

Public Attendance

The teleconference is open to the public but will be a listen-only line, unless a specific request is made to present comments during the teleconference. To make such a request, contact Mitchell Wyllins as listed under the **FOR FURTHER INFORMATION CONTACT** caption by December 14, 2010. Comments presented at the teleconference must relate directly to the NDHTF Concept of Operations document. Please note that vendor/contractor products/services will not be accepted for presentation during the teleconference.

Please note that the meeting may adjourn early if all business is finished.

Information on Services for Individuals With Disabilities

Persons with disabilities who require special assistance should advise Mitchell Wyllins of their anticipated special needs as early as possible.

Closed captioning will be provided at the following link: *http://www.fedrcc.us//Enter.aspx?EventID=1663550&CustomerID=321* and event code 1663550.

Dated: December 2, 2010.

W. Craig Fugate,

Administrator, Federal Emergency Management Agency.

[FR Doc. 2010–30973 Filed 12–8–10; 8:45 am]

BILLING CODE 9110\1–23–P

DEPARTMENT OF HOMELAND SECURITY

Federal Emergency Management Agency

[Docket ID FEMA–2008–0009]

National Disaster Housing Task Force Concept of Operations

AGENCY: Federal Emergency Management Agency, DHS.

ACTION: Notice of availability; request for comments.

SUMMARY: The Federal Emergency Management Agency (FEMA) is accepting comments on the National Disaster Housing Task Force (NDHTF) Concept of Operations (CONOPS). The CONOPS describes the Federal coordination of disaster housing assistance in preparation for, response to and recovery from all levels of disasters, including catastrophic events. Additionally, it outlines the implementation of the National Disaster Housing Strategy (Strategy).

DATES: Comments must be received by January 10, 2011.

ADDRESSES: Comments must be identified by docket ID FEMA–2008–0009 and may be submitted by one of the following methods:

Federal eRulemaking portal: http://www.regulations.gov. Follow the instructions for submitting comments. Please note that the proposed CONOPS is not a rulemaking and the Federal eRulemaking Portal is being utilized only as a mechanism for receiving comments.

Mail: Office of Chief Counsel, Federal Emergency Management Agency, Room 840, 500 C Street, SW., Washington, DC 20472–3100.

FOR FURTHER INFORMATION CONTACT: Mitchell Wyllins, National Disaster Housing Task Force, Room 428, 500 C Street, SW., Washington, DC 20472–3100, telephone 202–646–3173, and e-mail *mailto: NDHTF@dhs.gov.*

SUPPLEMENTARY INFORMATION:

I. Public Participation

Instructions: All submissions received must include the agency name and docket ID. Regardless of the method used for submitting comments or material, all submissions will be posted, without change, to the Federal eRulemaking Portal at *http://www.regulations.gov,* and will include any personal information you provide. Therefore, submitting this information makes it public. You may wish to read the Privacy Act notice, which can be viewed by clicking on the "Privacy Notice" link in the footer of *http://www.regulations.gov.*

You may submit your comments and material by the methods specified under the **ADDRESSES** caption. Please submit your comments and any supporting material by only one means to avoid the receipt and review of duplicate submissions.

Docket: The proposed CONOPS is available in docket ID FEMA–2008–0009. For access to the docket to read background documents or comments received, go to the Federal eRulemaking Portal at *http://www.regulations.gov* and search for the docket ID. Submitted comments may also be inspected at FEMA, Office of Chief Counsel, Room

840, 500 C Street, SW., Washington, DC 20472.

II. Background

The NDHTF CONOPS explains the Federal Government's normal disaster housing support role in operational terms, along with the Federal Government's responsibility to maintain readiness to assume a greater role in housing disaster survivors when required. It conveys national guidance, operating principles, and a vision for public (Federal, State, Tribal, local), and individual coordination. It defines the roles, programs, authorities, and responsibilities of all entities, emphasizing the cooperative efforts required for disaster survivors and affected communities to recover from a disaster. Additionally, the CONOPS outlines the national activities that will be pursued in moving toward accomplishing the goals of the Strategy. Implementing the Strategy strengthens the Nation's collective capability and resolve to fulfill all partner responsibilities to the American people in times of disaster or emergency, regardless of cause, scope, or complexity. The CONOPS describes how the NDHTF intends to connect critical programs, based in a wide variety of Federal agency authorities, to produce a unified effort.

Congress mandated that FEMA create the Strategy in the Post-Katrina Emergency Management Reform Act of 2006, Public Law 109–295. The Strategy, published in January 2009 and available at *http://www.regulations.gov* under docket ID FEMA–2008–0009, frames the full range of options that unified disaster housing efforts should consider to better meet the needs of disaster survivors and affected communities. The Strategy calls for the establishment of the NDHTF to provide a full-time, multi-agency focus on disaster housing related issues, to elevate the significance of disaster housing preparedness in all jurisdictions, and to oversee implementation of the Strategy. Additionally, the Strategy sets the goal of the NDHTF to create this CONOPS through a collaborative process among the various local, State, Tribal, and Federal partners, nongovernmental organizations, and the private sector to meet the needs of all disaster survivors.

Authority: 6 U.S.C. 772; 42 U.S.C. 5121–5207.

Dated: December 3, 2010.

W. Craig Fugate,

Administrator, Federal Emergency Management Agency.

[FR Doc. 2010–30972 Filed 12–8–10; 8:45 am]

BILLING CODE 9111–23–P

DEPARTMENT OF HOMELAND SECURITY

U.S. Citizenship and Immigration Services

Agency Information Collection Activities: Form I–601, Extension of a Currently Approved Information Collection; Comment Request

ACTION: 60-Day Notice of Information Collection Under Review: Form I–601, Application for Waiver of Grounds of Inadmissibility; OMB Control Number 1615–0029.

On November 30, 2010, USCIS published a 60-day notice in the **Federal Register** at 75 FR 74071, mistakenly announcing the revision of the Form I–601. The 60-day notice should have announced that USCIS was requesting comments on extending the use of the Form I–601. This notice corrects that error. However, during this 60 day period, USCIS will be evaluating whether to revise the Form I–601. Should USCIS decide to revise Form I–601 we will advise the public when we publish the 30-day notice in the **Federal Register** in accordance with the Paperwork Reduction Act. The public will then have 30 days to comment on any revisions to the Form I–601.

The Department of Homeland Security, U.S. Citizenship and Immigration Services will be submitting the following information collection request for review and clearance in accordance with the Paperwork Reduction Act of 1995. The information collection is published to obtain comments from the public and affected agencies. Comments are encouraged and will be accepted for sixty days until February 7, 2011.

Written comments and suggestions regarding items contained in this notice and especially with regard to the estimated public burden and associated response time should be directed to the Department of Homeland Security (DHS), USCIS, Chief, Regulatory Products Division, Clearance Office, 20 Massachusetts Avenue, NW., Suite 5012, Washington, DC 20529–2020. Comments may also be submitted to DHS via facsimile to 202–272–0997, or via e-mail at *rfs.regs@dhs.gov*. When submitting comments by e-mail, please add the OMB Control Number 1615–0029 in the subject box.

Note: The address listed in this notice should only be used to submit comments concerning the extension of the Form I–601. Please do not submit requests for individual case status inquiries to this address. If you are seeking information about the status of your individual case, please check "My Case Status" online at *https://egov.uscis.gov/cris/Dashboard,* or call the USCIS National Customer Service Center at 1–800–375–5283 (TTY 1–800–767–1833).

Written comments and suggestions from the public and affected agencies concerning the collection of information should address one or more of the following four points:

(1) Evaluate whether the collection of information is necessary for the proper performance of the functions of the agency, including whether the information will have practical utility;

(2) Evaluate the accuracy of the agencies estimate of the burden of the collection of information, including the validity of the methodology and assumptions used;

(3) Enhance the quality, utility, and clarity of the information to be collected; and

(4) Minimize the burden of the collection of information on those who are to respond, including through the use of appropriate automated, electronic, mechanical, or other technological collection techniques or other forms of information technology, e.g., permitting electronic submission of responses.

Overview of This Information Collection

(1) *Type of Information Collection:* Extension of a currently approved information collection.

(2) *Title of the Form/Collection:* Application for Waiver of Grounds of Inadmissibility.

(3) *Agency form number, if any, and the applicable component of the Department of Homeland Security sponsoring the collection:* Form I–601. U.S. Citizenship and Immigration Services.

(4) *Affected public who will be asked or required to respond, as well as a brief abstract: Primary:* Individuals or Households. The information collected on this form is used by U.S Citizenship and Immigration Services (USCIS) to determine whether the applicant is eligible for a waiver of excludability under section 212 of the Immigration and Nationality Act.

(5) *An estimate of the total number of respondents and the amount of time estimated for an average respondent to respond:* 13,676 responses at 1½ hours per response.

(6) *An estimate of the total public burden (in hours) associated with the collection:* 20,514 annual burden hours.

If you have additional comments, suggestions, or need a copy of the information collection instrument, please visit: *http://www.regulations.gov/search/index.jsp*.

We may also be contacted at: USCIS, Regulatory Products Division, 20 Massachusetts Avenue, NW., Suite 5012, Washington, DC 20529–2020, telephone number 202–272–8377.

Dated: December 3, 2010.

Stephen Tarragon,

Acting Chief, Regulatory Products Division, U.S. Citizenship and Immigration Services, Department of Homeland Security.

[FR Doc. 2010–30914 Filed 12–8–10; 8:45 am]

BILLING CODE 9111–97–P

DEPARTMENT OF HOMELAND SECURITY

U.S. Customs and Border Protection

Agency Information Collection Activities: Declaration of Ultimate Consignee That Articles Were Exported for Temporary Scientific or Educational Purposes

AGENCY: U.S. Customs and Border Protection, Department of Homeland Security

ACTION: 30-Day notice and request for comments; Extension of an existing information collection: 1651–0036.

SUMMARY: U.S. Customs and Border Protection (CBP) of the Department of Homeland Security will be submitting the following information collection request to the Office of Management and Budget (OMB) for review and approval in accordance with the Paperwork Reduction Act: Declaration of Ultimate Consignee That Articles Were Exported for Temporary Scientific or Educational Purposes. This is a proposed extension of an information collection that was previously approved. CBP is proposing that this information collection be extended with no change to the information collected. This document is published to obtain comments from the public and affected agencies. This proposed information collection was previously published in the **Federal Register** (75 FR 60133) on September 29, 2010, allowing for a 60-day comment period. No comments were received. This notice allows for an additional 30 days for public comments. This process is conducted in accordance with 5 CFR 1320.10.

DATES: Written comments should be received on or before January 10, 2011.

ADDRESSES: Interested persons are invited to submit written comments on this proposed information collection to the Office of Information and Regulatory Affairs, Office of Management and Budget. Comments should be addressed to the OMB Desk Officer for Customs and Border Protection, Department of Homeland Security, and sent via electronic mail to *oira_submission@omb.eop.gov* or faxed to (202) 395–5806.

SUPPLEMENTARY INFORMATION: U.S. Customs and Border Protection (CBP) encourages the general public and affected Federal agencies to submit written comments and suggestions on proposed and/or continuing information collection requests pursuant to the Paperwork Reduction Act (Pub. L. 104–13). Your comments should address one of the following four points:

(1) Evaluate whether the proposed collection of information is necessary for the proper performance of the functions of the agency/component, including whether the information will have practical utility;

(2) Evaluate the accuracy of the agencies/components estimate of the burden of the proposed collection of information, including the validity of the methodology and assumptions used;

(3) Enhance the quality, utility, and clarity of the information to be collected; and

(4) Minimize the burden of the collections of information on those who are to respond, including the use of appropriate automated, electronic, mechanical, or other technological techniques or other forms of information.

Title: Declaration of Ultimate Consignee That Articles Were Exported for Temporary Scientific or Educational Purposes

OMB Number: 1651–0036

Form Number: None

Abstract: The Declaration of Ultimate Consignee that Articles were Exported for Temporary Scientific or Educational Purposes is used to document duty free entry under conditions when articles are temporarily exported solely for scientific or educational purposes. This declaration, which is completed by the ultimate consignee and submitted to CBP by the importer or the agent of the importer, is used to assist CBP personnel in determining whether the imported articles should be free of duty. It is provided for under 19 U.S.C. 1202, HTSUS Subheading 9801.00.40, and 19 CFR 10.67(a)(3) which requires a declaration to Customs and Border Protection (CBP) stating that the articles were sent from the United States solely for temporary scientific or educational use and describing the specific use to which they were put while abroad.

Current Actions: This submission is being made to extend the expiration date with no change to the burden hours.

Type of Review: Extension (without change).

Affected Public: Businesses.

Estimated Number of Respondents: 55.

Estimated Number of Annual Responses per Respondent: 3.

Estimated Number of Total Annual Responses: 165.

Estimated Time per Response: 10 minutes.

Estimated Total Annual Burden Hours: 27.

If additional information is required contact: Tracey Denning, U.S. Customs and Border Protection, Regulations and Rulings, Office of International Trade, 799 9th Street, NW., 5th Floor, Washington, DC 20229–1177, at 202–325–0265.

Dated: December 6, 2010.

Tracey Denning,

Agency Clearance Officer, U.S. Customs and Border Protection.

[FR Doc. 2010–30958 Filed 12–8–10; 8:45 am]

BILLING CODE 9111–14–P

DEPARTMENT OF HOUSING AND URBAN DEVELOPMENT

[Docket No. FR–5376–N–119]

Notice of Submission of Proposed Information Collection to OMB; Emergency Comment Request Transformation Initiative: Sustainable Communities Research Grant Program; Notice of Proposed Information Collection for Public Comment

AGENCY: Office of the Chief Information Officer.

ACTION: Notice of proposed information collection.

SUMMARY: The proposed information collection requirement described below has been submitted to the Office of Management and Budget (OMB) for emergency review and approval, as required by the Paperwork Reduction Act. The Department is soliciting public comments on the subject proposal.

The purpose of this notice is to inform potential applicants that the Office of Policy Development and Research (PD&R) of the Department of Housing and Urban Development (HUD) is interested in receiving preliminary applications for grants to support

research activities focusing on sustainability issues.

Grantees are selected through a competitive process, announced through a Notice of Funding Availability. Applicants are required to submit certain information as part of their application for assistance. Grantees are required to prepare a quarterly status report so that HUD monitors the progress of grantees in completing their research.

DATES: *Comments Due Date: December 23, 2010.*

ADDRESSES: Interested persons are invited to submit comments regarding this proposal. Comments must be received within fourteen (14) days from the date of this Notice. Comments should refer to the proposal by name/or OMB approval number and should be sent to: Ross A. Rutledge, HUD Desk Officer, Office of Management and Budget, New Executive Office Building, Washington, DC 20503; *e-mail: Ross.A.Rutledge@omb.eop.gov; fax:* 202–395–3086.

FOR FURTHER INFORMATION CONTACT: Colette Pollard, Departmental Reports Management Officer, QDAM, Department of Housing and Urban Development, 451 7th Street, SW., Washington, DC 20410; e-mail *Colette.Pollard@HUD.gov;* telephone (202) 402–3400. This is not a toll-free number. Copies of available documents submitted to OMB may be obtained from Ms. Pollard.

SUPPLEMENTARY INFORMATION: The purpose of this notice is to inform potential applicants that the Office of Policy Development and Research (PD&R) of the Department of Housing and Urban Development (HUD) is interested in receiving preliminary applications for grants to support research activities focusing on sustainability issues.

Grantees are selected through a competitive process, announced through a Notice of Funding Availability. Applicants are required to submit certain information as part of their application for assistance. Grantees are required to prepare a quarterly status report so that HUD monitors the progress of grantees in completing their research.

This Notice Also Lists the Following Information

Title of Proposal: Sustainable Communities Research Grant Program.

Description of Information Collection: To select grantees during the application process and to monitor all grantee's performance.

OMB Control Number: Pending.

Agency Form Numbers: 424-cb, SF–424supp, 2880, SF424, SF–LLL.

Members of Affected Public: Private Sector.

Estimation of the Total Numbers of Hours Needed to Prepare the Information Collection Including Number of Respondents, Frequency of Responses, and Hours of Response:

(1) Pre-Award:

HUD estimates that each applicant spends approximately 42 person-hours to complete an application. Almost all of this time is invested by a professor or other senior administrator who would oversee the program. HUD estimates the mean hourly rate at $30. For 20 applications, the computation is as follows: 20 applications × 42 hours × $30 per hours = $25,200.

(2) Post-Award:

HUD estimates that each grantee will spend approximately 6 hours a year maintaining records. HUD also estimates that each grantee will spend approximately 4 hours a year preparing monitoring reports. Clerical staff and faculty/supervisory staff will share this burden. HUD estimates the applicable hourly rate at $15. The computation is as follow: 5 grantees × 10 hours × $15 an hour = $750.

Description of information collection	Number of respondents	Responses per year	Total annual responses	Hours per response	Total hours
SF424	20	1	20	0.75	15
SF424 Supplement	20	1	20	0.08	1.6
HUD 424CB	20	1	20	3	60
SFLLL	20	1	20	0.17	3.4
HUD 2880 (2510–0011)	20	1	20	0	0
HUD 96010 (2535–0114)	20	1	20	3	60
Rating factor 1	20	1	20	7	140
Rating factor 2	20	1	20	7	140
Rating factor 3	20	1	20	7	140
Rating factor 4	20	1	20	7	140
Rating factor 5	20	1	20	7	140
Subtotal (Application)	20	1	20	42	840
Quarterly Reports	5	4	20	6	120
Recordkeeping	5		5	4	20
Total	20		40	Varies	980

Authority: The Paperwork Reduction Act of 1995, 44 U.S.C. chapter 35, as amended.

Dated: December 3, 2010.

Colette Pollard,

Departmental Reports Management Officer, Office of the Chief Information Officer.

[FR Doc. 2010–30977 Filed 12–8–10; 8:45 am]

BILLING CODE 4210–67–P

DEPARTMENT OF HOUSING AND URBAN DEVELOPMENT

[Docket No. FR–5376–N–120]

Notice of Submission of Proposed Information Collection to OMB; Emergency Comment Request; Transformation Initiative: Homeless Families Grant Program; Notice of Proposed Information Collection for Public Comment

AGENCY: Office of the Chief Information Officer.

ACTION: Notice of proposed information collection.

SUMMARY: The proposed information collection requirement described below has been submitted to the Office of Management and Budget (OMB) for emergency review and approval, as required by the Paperwork Reduction Act. The Department is soliciting public comments on the subject proposal.

The purpose of this program is to enhance the demonstration project conducted by the Office of Policy Development focusing on Homeless

Families by providing a vehicle for conducting a number of small research projects aimed at collecting additional/supplemental information and analyses.

Grantees are selected through a competition process, announced through a Notice of Funding Availability. Applicants are required to submit certain information as part of their application for assistance. Grantees are required to prepare a quarterly status report so that HUD monitors the progress of grantees in completing their research.

DATES: *Comments Due Date:* December 23, 2010.

ADDRESSES: Interested persons are invited to submit comments regarding this proposal. Comments must be received within fourteen (14) days from the date of this Notice. Comments should refer to the proposal by name/or OMB approval number and should be sent to: Ross A. Rutledge, HUD Desk Officer, Office of Management and Budget, New Executive Office Building, Washington, DC 20503; *e-mail: Ross.A.Rutledge@omb.eop.gov; fax:* 202–395–3086.

FOR FURTHER INFORMATION CONTACT: Colette Pollard, Departmental Reports Management Officer, QDAM, Department of Housing and Urban Development, 451 7th Street, SW., Washington, DC 20410; e-mail *Colette.Pollard@HUD.gov;* telephone (202) 402–3400. This is not a toll-free number. Copies of available documents submitted to OMB may be obtained from Ms. Pollard.

SUPPLEMENTARY INFORMATION: The purpose of this program is to enhance the demonstration project conducted by the Office of Policy Development focusing on Homeless Families by providing a vehicle for conducting a number of small research projects aimed at collecting additional/supplemental information and analyses.

Grantees are selected through a competition process, announced through a Notice of Funding Availability. Applicants are required to submit certain information as part of their application for assistance. Grantees are required to prepare a quarterly status report so that HUD monitors the progress of grantees in completing their research.

This Notice Also Lists the Following Information

Title of Proposal: Transformation Initiative: Homeless Families Small Grant Research Demonstration Program.

Description of Information Collection: To select grantees during the application process and to monitor all grantee's performance.

OMB Control Number: Pending.

Agency Form Numbers: SF–424supp, 424-cb, SF–424, 2880, SF–LLL.

Members of Affected Public: Private Sector.

Estimation of the Total Numbers of Hours Needed to Prepare the Information Collection Including Number of Respondents, Frequency of Responses, and Hours of Response:

(1) Pre-Award:

HUD estimates that each applicant spends approximately 7 person-hours to complete the preliminary application phase. Almost all of this time is invested by a researcher, expert, analyst. HUD estimates the mean hourly rate at $30. For 15 applications, the computation is as follows: 15 applications × 7 hours × $30 per hours = $3,150.

HUD estimates that each applicant spends approximately 41.25 person-hours to complete an application. Almost all of this time is invested by a researcher, expert, analyst. HUD estimates the mean hourly rate at $30. For 10 applications, the computation is as follows: 10 applications × 41.25 hours × $30 per hours = $12,375.

(2) Post-Award:

HUD estimates that each grantee will spend approximately 6 hours a year maintaining records. HUD also estimates that each grantee will spend approximately 4 hours a year preparing monitoring reports. Clerical staff and faculty/supervisory staff will share this burden. HUD estimates the applicable hourly rate at $15. The computation is as follow: 2 grantees × 10 hours × $15 an hour = $300.

Description of information collection	Number of respondents	Responses per year	Total annual responses	Hrs per response	Total hours
SF424	15	1	15	0.75	11.25
Pre-application stage	15	1	15	7	105
SF424 Supplement	10	1	10	0.08	.8
HUD 424CB	10	1	15	3	30
SFLLL	10	1	15	0.17	1.7
HUD 2880 (2510–0011)	10	1	10	0	0
HUD 96010 (2535–0114)	10	1	10	3	30
Rating factor 1	10	1	10	7	70
Rating factor 2	10	1	10	7	70
Rating factor 3	10	1	10	7	70
Rating factor 4	10	1	10	7	70
Rating factor 5	10	1	10	7	70
Subtotal (Application)	10	1	10	49	528.75
Quarterly Reports	2	4	8	6	48
Recordkeeping	2		2	4	8
Total	10		10	Varies	584.75

Authority: The Paperwork Reduction Act of 1995, 44 U.S.C. chapter 35, as amended.

Dated: December 3, 2010.

Colette Pollard,

Departmental Reports Management Officer, Office of the Chief Information Officer.

[FR Doc. 2010–31007 Filed 12–8–10; 8:45 am]

BILLING CODE 4210–67–P

DEPARTMENT OF HOUSING AND URBAN DEVELOPMENT

[Docket No. FR–5380–N–45]

Notice of Submission of Proposed Information Collection to OMB; Emergency Comment Request; Application for HUD/FHA Insured Mortgage "HOPE for Homeowners"; Notice of Proposed Information Collection for Public Comment

AGENCY: Office of the Chief Information Officer, HUD.

ACTION: Notice of proposed information collection.

SUMMARY: The proposed information collection requirement described below has been submitted to the Office of Management and Budget (OMB) for emergency review and approval, as required by the Paperwork Reduction Act. The Department is soliciting public comments on the subject proposal.

DATES: *Comments Due Date:* December 23, 2010.

ADDRESSES: Interested persons are invited to submit comments regarding this proposal. Comments must be received within seven (14) days from the date of this Notice. Comments should refer to the proposal by name/or OMB approval number (2502–0579) and should be sent to: Ross A. Rutledge, HUD Desk Officer, Office of Management and Budget, New Executive Office Building, Washington, DC 20503; e-mail: *Ross_A._Rutledge@omb.eop.gov;* fax: 202–395–6974.

FOR FURTHER INFORMATION CONTACT: Karin Hill, Director, Office of Single Family Program Development, Department of Housing and Urban Development, 451 7th Street SW., Washington, DC 20410, telephone (202) 708–2121 (this is not a toll free number) for copies of the proposed forms and other available information.

SUPPLEMENTARY INFORMATION:

This Notice informs the public that the U.S. Department of Housing and Urban Development (HUD) has submitted to OMB, for emergency processing, an information collection package with respect to this information is collected on new mortgages offered by FHA approved mortgagees to mortgagors who are at risk of losing their homes to foreclosure through the HOPE for Homeowners Program, and to those who owe more than the value of their homes through the FHA Refinance of Borrowers in Negative Equity Positions. The new FHA insured mortgages refinance the borrowers existing mortgage at a significant writedown. Under the HOPE for Homeowners program the mortgagors share the new equity with FHA.

This Notice is soliciting comments from members of the public and affecting agencies concerning the proposed collection of information to: (1) Evaluate whether the proposed collection of information is necessary for the proper performance of the functions of the agency, including whether the information will have practical utility; (2) Evaluate the accuracy of the agency's estimate of the burden of the proposed collection of information; (3) Enhance the quality, utility, and clarity of the information to be collected; and (4) Minimize the burden of the collection of information on those who are to respond; including through the use of appropriate automated collection techniques or other forms of information technology, *e.g.,* permitting electronic submission of responses.

This Notice also lists the following information:

Title of Proposal: Application for HUD/FHA Insured Mortgage "HOPE for Homeowners".

Description of Information Collection: This information is collected on new mortgages offered by FHA approved mortgagees to mortgagors who are at risk of losing their homes to foreclosure through the HOPE for Homeowners Program, and to those who owe more than the value of their homes through the FHA Refinance of Borrowers in Negative Equity Positions. The new FHA insured mortgages refinance the borrowers existing mortgage at a significant writedown. Under the HOPE for Homeowners program the mortgagors share the new equity with FHA.

OMB Control Number: 2502–0579.

Agency Form Numbers: HUD92900–H4H, HUD92915–H4H, HUD92916–H4H and HUD92917–H4H, and HUD–92918.

Members of Affected Public: Private sector, Small businesses and other for profits.

Estimation of the total numbers of hours needed to prepare the information collection including number of respondents, frequency of responses, and hours of response: The number of burden hours is 146,096. The number of respondents is 11,000, the number of responses is 882,242, the frequency of response is once per loan, and the burden hour per response is 4.05.

Authority: The Paperwork Reduction Act of 1995, 44 U.S.C. chapter 35, as amended.

Dated: December 3, 2010.

Colette Pollard,

Department Reports Management Officer, Office of the Chief Information Officer.

[FR Doc. 2010–30982 Filed 12–8–10; 8:45 am]

BILLING CODE 4210–67–P

DEPARTMENT OF HOUSING AND URBAN DEVELOPMENT

[Docket No. FR–5376–N–118]

Notice of Submission of Proposed Information Collection to OMB; Emergency Comment Request; Transformation Initiative: Natural Experiments Grant Program; Notice of Proposed Information Collection for Public Comment

AGENCY: Office of the Chief Information Officer.

ACTION: Notice of proposed information collection.

SUMMARY: The proposed information collection requirement described below has been submitted to the Office of Management and Budget (OMB) for emergency review and approval, as required by the Paperwork Reduction Act. The Department is soliciting public comments on the subject proposal.

DATES: *Comments Due Date:* January 10, 2011.

ADDRESSES: Interested persons are invited to submit comments regarding this proposal. Comments must be received within thirty (30) days from the date of this Notice. Comments should refer to the proposal by name/or OMB approval number and should be sent to: Ross A. Rutledge, HUD Desk Officer, Office of Management and Budget, New Executive Office Building, Washington, DC 20503; *e-mail: Ross.A.Rutledge@omb.eop.gov; fax:* 202–395–3086.

FOR FURTHER INFORMATION CONTACT: Colette Pollard, Departmental Reports Management Officer, QDAM, Department of Housing and Urban Development, 451 7th Street, SW., Washington, DC 20410; e-mail Colette.Pollard@HUD.gov; telephone (202) 402–3400. This is not a toll-free number. Copies of available documents submitted to OMB may be obtained from Ms. Pollard.

SUPPLEMENTARY INFORMATION:

This Notice ALSO LISTS the Following Information

Title of Proposal: Natural Experiments Grant Program.

Description of Information Collection: To select grantees during the application process and to monitor all grantee's performance.

OMB Control Number: Pending.

Agency Form Numbers: 424–cb, 2880, SF–424, SF–424supp, SF–LLL.

Members of Affected Public: Private Sector.

Estimation of the total numbers of hours needed to prepare the information collection including number of respondents, frequency of responses, and hours of response:

(1) Pre-Award

HUD estimates that each applicant spends approximately 42 person-hours to complete an application. Almost all of this time is invested by a professor or other senior administrator who would oversee the program. HUD estimates the mean hourly rate at $30. For 20 applications, the computation is as follows: 20 applications × 42 hours × $30 per hours = $25,200.

(2) Post-Award

HUD estimates that each grantee will spend approximately 6 hours a year maintaining records.

HUD also estimates that each grantee will spend approximately 4 hours a year preparing monitoring reports. Clerical staff and faculty/supervisory staff will share this burden. HUD estimates the applicable hourly rate at $15. The computation is as follow: 5 grantees × 10 hours × $15 an hour = $750.

Description of information collection	Number of respondents	Responses per year	Total annual responses	Hrs per response	Total hours
SF424	20	1	20	0.75	15
SF424 Supplement	20	1	20	0.08	1.6
HUD 424CB	20	1	20	3	60
SFLLL	20	1	20	0.17	3.4
HUD 2880 (2510–0011)	20	1	20	0	0
HUD 96010 (2535–0114)	20	1	20	3	60
Rating factor 1	20	1	20	7	140
Rating factor 2	20	1	20	7	140
Rating factor 3	20	1	20	7	140
Rating factor 4	20	1	20	7	140
Rating factor 5	20	1	20	7	140
Subtotal (Application)	20	1	20	42	840
Quarterly Reports	5	4	20	6	120
Record keeping	5	.....	5	4	20
Total	20	.....	40	Varies	980

Authority: The Paperwork Reduction Act of 1995, 44 U.S.C. Chapter 35, as amended.

Dated: *December 3, 2010.*

Colette Pollard,

Departmental Reports Management Officer, Office of the Chief Information Officer.

[FR Doc. 2010–30979 Filed 12–8–10; 8:45 am]

BILLING CODE 4210–67–P

DEPARTMENT OF THE INTERIOR

Bureau of Ocean Energy Management, Regulation and Enforcement

[Docket ID No. BOEM–2010–0061]

BOEMRE Information Collection Activity: 1010–0183, Information Requirements for Exploration Plans, Development and Production Plans, and Development Operations Coordination Documents on the OCS NTL, Renewal of a Collection; Submitted for Office of Management and Budget (OMB) Review; Comment Request

AGENCY: Bureau of Ocean Energy Management, Regulation and Enforcement (BOEMRE), Interior.

ACTION: Notice of extension of an information collection (1010–0183).

SUMMARY: To comply with the Paperwork Reduction Act of 1995 (PRA), we are notifying the public that we have submitted to OMB an information collection request (ICR) to renew approval of the paperwork requirements in the regulations under 30 CFR 250, Subpart b, Plans and Information, and related documents. The collection was originally approved by OMB under an emergency request. This notice also provides the public a second opportunity to comment on the paperwork burden of these regulatory requirements.

DATES: Submit written comments by January 10, 2011.

ADDRESSES: Submit comments by either fax (202) 395–5806 or e-mail *OIRA_DOCKET@omb.eop.gov* directly to the Office of Information and Regulatory Affairs, OMB, *Attention:* Desk Officer for the Department of the Interior (1010–0183). Please also submit a copy of your comments to BOEMRE by any of the means below.

- *Electronically:* go to *http://www.regulations.gov.* In the entry titled "Enter Keyword or ID," enter BOEM–2010–0061 then click search. Follow the instructions to submit public comments and view supporting and related materials available for this collection. BOEMRE will post all comments.
- E-mail *cheryl.blundon@mms.gov.* Mail or hand-carry comments to: Department of the Interior; Bureau of Ocean Energy Management, Regulation and Enforcement; Attention: Cheryl Blundon; 381 Elden Street, MS–4024; Herndon, Virginia 20170–4817. Please reference ICR 1010–0183 in your comment and include your name and return address.

FOR FURTHER INFORMATION CONTACT: Cheryl Blundon, Regulations and Standards Branch, (703) 787–1607. You may also contact Cheryl Blundon to obtain a copy, at no cost, of the regulations and the NTL that require the subject collection of information.

SUPPLEMENTARY INFORMATION:

Title: 30 CFR 250, Subpart b, Plans and Information.

OMB Control Number: 1010–0183.

Abstract: The Outer Continental Shelf (OCS) Lands Act, as amended (43 U.S.C. 1331 *et seq.* and 43 U.S.C. 1801 *et seq.*), authorizes the Secretary of the Interior (Secretary) to prescribe rules and regulations to manage the mineral resources of the OCS. Such rules and regulations will apply to all operations conducted under a lease, right-of-use and easement, and pipeline right-of-way. Operations on the OCS must

preserve, protect, and develop oil and natural gas resources in a manner that is consistent with the need to make such resources available to meet the Nation's energy needs as rapidly as possible; to balance orderly energy resource development with protection of human, marine, and coastal environments; to ensure the public a fair and equitable return on the resources of the OCS; preserve and maintain free enterprise competition; and ensure that the extent of oil and natural gas resources of the OCS is assessed at the earliest practicable time. Section 43 U.S.C. 1332(6) states that "operations in the outer Continental Shelf should be conducted in a safe manner by well-trained personnel using technology, precautions, and techniques sufficient to prevent or minimize the likelihood of blowouts, loss of well control, fires, spillages, physical obstruction to other users of the waters or subsoil and seabed, or other occurrences which may cause damage to the environment or to property, or endanger life or health."

To carry out these responsibilities, the Bureau of Ocean Energy Management, Regulation and Enforcement (BOEMRE) issues regulations to ensure that operations in the OCS will meet statutory requirements; provide for safety and protect the environment; and result in diligent exploration, development, and production of OCS leases. In addition, we also issue Notices to Lessees and Operators (NTLs) that provide clarification, explanation, and interpretation of our regulations. These NTLs are also used to convey purely informational material and to cover situations that might not be adequately addressed in our regulations. The latter is the case for the information collection required by the subject NTL.

The subject of this ICR is an NTL based on the recommendations in the May 27, 2010, Report from the Secretary of the Interior to the President of the United States, *Increased Safety Measures for Energy Development on the Outer Continental Shelf* (Report). BOEMRE issued this NTL for lessees and operators to comply with the requirements and recommendations of the report as a result of the Deepwater Horizon accident and subsequent oil spill in the Gulf of Mexico. The primary information collection requirements for OCS plans are 30 CFR 250, subpart B, approved under OMB Control Number 1010–0151. However, in connection with this subpart, BOEMRE believes that the paperwork burden in complying with the NTL is in addition to that currently approved for subpart B. We are renewing the collection for 3 years because the additional information required by the NTL needs to be collected for a longer period than allowed by the original emergency OMB request.

Regulations implementing requirements for exploration, production, and development plans are under 30 CFR 250, subpart B. Responses are mandatory. No questions of a sensitive nature are asked. BOEMRE protects proprietary information according to the Freedom of Information Act (5 U.S.C. 552) and its implementing regulations (43 CFR 2), 30 CFR 250.197, Data and information to be made available to the public for limited inspection, and 30 CFR 252, OCS Oil and Gas Information Program.

The Deepwater Horizon event is one of national significance that included the deaths of 11 people and significantly harmed the marine ecosystem, wildlife, and property along the Gulf Coast. These events highlight the importance of ensuring safe operations on the OCS.

BOEMRE will use this information, as well as other information and analyses, to comprehensively assess what changes may be needed to BOEMRE program-wide requirements. BOEMRE will review the data submitted to analyze future activities under Exploration Plans, Development and Production Plans, and Development Operations Coordination Documents.

Frequency: On occasion.

Description of Respondents: Potential respondents comprise Federal oil and gas lessees and operators.

Estimated Reporting and Recordkeeping Hour Burden: We expect to receive 517 responses from the lessees and operators. We estimate the total annual reporting and recordkeeping burden is 9,952 (rounded) annual burden hours (517 responses × 19.25 hours per response = 9,952 annual burden hours).

Estimated Reporting and Recordkeeping Non-Hour Cost Burden: We have identified no paperwork non-hour cost burdens associated with the collection of information.

Public Disclosure Statement: The PRA (44 U.S.C. 3501, *et seq.*) provides that an agency may not conduct or sponsor a collection of information unless it displays a currently valid OMB control number. Until OMB approves a collection of information, you are not obligated to respond.

Comments: Section 3506(c)(2)(A) of the PRA (44 U.S.C. 3501, *et seq.*) requires each agency "* * * to provide notice * * * and otherwise consult with members of the public and affected agencies concerning each proposed collection of information * * *" Agencies must specifically solicit comments to: (a) Evaluate whether the proposed collection of information is necessary for the agency to perform its duties, including whether the information is useful; (b) evaluate the accuracy of the agency's estimate of the burden of the proposed collection of information; (c) enhance the quality, usefulness, and clarity of the information to be collected; and (d) minimize the burden on the respondents, including the use of automated collection techniques or other forms of information technology.

To comply with the public consultation process, on September 7, 2010, we published a **Federal Register** notice (75 FR 54370) announcing that we would submit this ICR to OMB for approval. The notice provided the required 60-day comment period. In addition, § 250.199 provides the OMB control number for the information collection requirements imposed by the 30 CFR 250 regulations. The regulation also informs the public that they may comment at any time on the collections of information and provides the address to which they should send comments. We have received no comments in response to these efforts.

If you wish to comment in response to this notice, you may send your comments to the offices listed under the **ADDRESSES** section of this notice. The OMB has up to 60 days to approve or disapprove the information collection but may respond after 30 days. Therefore, to ensure maximum consideration, OMB should receive public comments by January 10, 2011.

Public Availability of Comments: Before including your address, phone number, e-mail address, or other personal identifying information in your comment, you should be aware that your entire comment—including your personal identifying information—may be made publicly available at any time. While you can ask us in your comment to withhold your personal identifying information from public review, we cannot guarantee that we will be able to do so.

BOEMRE Information Collection Clearance Officer: Arlene Bajusz (703) 787–1025.

Dated: November 18, 2010.

William S. Hauser, Acting Chief,

Office of Offshore Regulatory Programs.

[FR Doc. 2010–30964 Filed 12–8–10; 8:45 am]

BILLING CODE 4310–MR–P

DEPARTMENT OF THE INTERIOR

U.S. Geological Survey

[USGS GX11GK009970000]

Proposed Information Collection; Comment Request

AGENCY: United States Geological Survey (USGS), Interior.

ACTION: Notice; request for comments.

SUMMARY: We (U.S. Geological Survey) will ask the Office of Management and Budget (OMB) to approve the information collection (IC) described below. To comply with the Paperwork Reduction Act of 1995 and as a part of our continuing efforts to reduce paperwork and respondent burden, we invite the general public and other federal agencies to comment on this IC. We may not conduct or sponsor and a person is not required to respond to a collection unless it displays a currently valid OMB control number.

DATES: You must submit comments on or before February 18, 2011.

ADDRESSES: Send your comments to the IC to Phadrea Ponds, Information Collections Clearance Officer, U.S. Geological Survey, 2150–C Center Avenue, Fort Collins, CO 80525 (mail); (970) 226–9230 (fax); or *pponds@usgs.gov* (e-mail). Please reference Information Collection 1028–NEW, DYSI.

FOR FURTHER INFORMATION CONTACT: Rex Baum by mail at U.S. Geological Survey, Denver Federal Center, Box 25046, M.S. 966, Denver, CO 80225–0046, or by telephone at 303–273–8610.

SUPPLEMENTARY INFORMATION:

I. Abstract

Landslides are a serious but little understood hazard in the U.S., causing more than $3 billion in damages and 25 deaths per year. The objective of this collection is to educate Americans about landslide hazards and to build better inventories of landslides through citizen participation. This project will make it possible for the public to report their observations of landslides on a Web site. The information gathered through the on-line database will be used to classify the landslides and damage, as well as provide information to scientists about the location, time, speed, and size of the landslides. The USGS Landslide Hazards Program is developing an interactive Web site for public reporting of landslides that is patterned after the USGS Earthquake Program's successful "Did you feel it?" Web site for collecting reports of felt earthquakes. A Pilot Project will be conducted in the United States. The USGS may use the information to provide qualitative, quantitative, or graphical descriptions of landslide damage. We will protect information from respondents considered proprietary under the Freedom of Information Act (5 U.S.C. 552) and implementing regulations (43 CFR part 2), and under regulations at 30 CFR 250.197, "Data and information to be made available to the public or for limited inspection." Responses are voluntary. No questions of a "sensitive" nature are asked.

II. Data

OMB Control Number: None. This is a new collection.

Title: USGS Landslide Report.

Type of Request: New.

Affected Public: General public.

Respondent's Obligation: Voluntary.

Frequency of Collection: On occasion, after a landslide.

Estimated Annual Number of Respondents: 2,000.

Estimated Total Annual Burden Hours: 200.

III. Request for Comments

We invite comments concerning this IC on: (1) Whether or not the collection of information is necessary, including whether or not the information will have practical utility; (2) the accuracy of our estimate of the burden for this collection of information; (3) ways to enhance the quality, utility, and clarity of the information to be collected; and (4) ways to minimize the burden of the collection of information on respondents. Please note that the comments submitted in response to this notice are a matter of public record. Before including your address, phone number, e-mail address, or other personal identifying information in your comment, you should be aware that your entire comment, including your personal identifying information, may be made publicly available at any time. While you can ask OMB in your comment to withhold your personal identifying information from public review, we cannot guarantee that it will be done. To comply with the public process, we hereby publish this **Federal Register** notice announcing that we will submit this IC to OMB for approval. The notice provides the required 60-day public comment period.

Dated: December 3, 2010.

William S. Leith,

Acting Associate Director for Natural Hazards.

[FR Doc. 2010–30952 Filed 12–8–10; 8:45 am]

BILLING CODE 4311–AM–P

DEPARTMENT OF THE INTERIOR

Bureau of Land Management

[LLORV00000.L10200000.DD0000; HAG 11–0076]

Notice of Public Meeting

AGENCY: Bureau of Land Management, Interior.

ACTION: Notice of Public Meeting.

SUMMARY: Pursuant to the Federal Land Policy and Management Act and the Federal Advisory Committee Act, the U.S. Department of the Interior, Bureau of Land Management (BLM) Southeast Oregon Resource Advisory Council (SEORAC) will meet as indicated below:

DATES: The SEORAC meeting will take place January 20, 2011 and January 21, 2011.

ADDRESSES: The meeting will be held at the Harney County Community Center Conference Room, 484 Broadway, Burns, Oregon 97720.

FOR FURTHER INFORMATION CONTACT: Mark Wilkening, Public Affairs Specialist, BLM Vale District Office, 100 Oregon Street, Vale, Oregon 97918, (541) 473–6218 or e-mail *mark_wilkening@blm.gov.*

SUPPLEMENTARY INFORMATION: The meeting will take place on January 20 and January 21, 2011, at the Harney County Community Center Conference Room, 484 Broadway, Burns, Oregon. On January 20, the meeting will be held from 1 p.m. to 4 p.m. (Pacific Time). On January 21, the meeting will be held from 8 a.m. to 12 p.m. (Pacific Time). The meeting may include such topics as Oregon Natural Desert Association's Wilderness proposal; an update on Oregon Department of Fish and Wildlife Sage-grouse plan decision; an update on the transmission line proposal status for Boardman to Hemmingway; the North Steens, Ladd Canyon, et al. and other energy activities; an update on BLM's Vegetation Environmental Impact; the Ruby Pipeline and the biomass plant in Lakeview; subgroup reports and other matters as may reasonably come before the council. The public is welcome to attend all portions of the meeting and may make oral comments to the SEORAC at 10 a.m. on January 21, 2011. Those who wish to verbally address the SEORAC are asked to provide a *written* statement of their comments or presentation. Unless otherwise approved by the SEORAC Chair, the public comment period will last no longer than 15 minutes, and each speaker may address the SEORAC for a maximum of five minutes. If reasonable accommodation is required, please

contact the BLM Vale District Office at (541) 473–6218 as soon as possible.

Larry Frazier,

Vale Associate District Manager.

[FR Doc. 2010–30959 Filed 12–8–10; 8:45 am]

BILLING CODE 4310–33–P

DEPARTMENT OF THE INTERIOR

Bureau of Land Management

[LLCOF00000–L18200000–XX0000]

Notice of Resource Advisory Council Meeting for the Front Range Resource Advisory Council

AGENCY: Bureau of Land Management, Interior.

ACTION: Notice of Public Meeting.

SUMMARY: In accordance with the Federal Land Policy and Management Act of 1976 and the Federal Advisory Committee Act of 1972, the U.S. Department of the Interior, Bureau of Land Management (BLM) Front Range Resource Advisory Council (RAC), will meet as indicated below.

DATES: The meeting will be held on January 12, 2011, from 9:15 a.m. to 4 p.m.

ADDRESSES: BLM Royal Gorge Field Office (RGFO), 3028 East Main Street, Canon City, CO 81212.

FOR FURTHER INFORMATION CONTACT: Cass Cairns, Front Range RAC Coordinator (*see* address above) *Phone:* (719) 269–8553. *E-mail: ccairns@blm.gov.*

SUPPLEMENTARY INFORMATION: The 15-member Council advises the Secretary of the Interior, through the BLM, on a variety of planning and management issues associated with public land management in the BLM Colorado Front Range District, which includes the RGFO and the San Luis Valley Public Lands Center and its respective field offices: Saguache Field Office, Del Norte Field Office, and La Jara Field Office. Planned topics of discussion and agenda items include: Saguache Field Office's Zapata Falls Campground fee proposals, a tour and discussion of the Wild Horse Inmate Program (WHIP) at the Cañon City Correctional Facility, and manager updates on current land management issues.

The meeting at the RGFO is open to the public. The public is encouraged to make oral comments to the RAC at 9:30 a.m. Written statements may also be submitted for the RAC's consideration. The public will not be able to attend the WHIP tour due to security protocols. Summary minutes for the RAC meetings will be maintained in the RGFO and will be available for public inspection and reproduction during regular business hours within thirty (30) days following the meeting. The agenda will be available 10 days prior to each meeting at: *http://www.blm.gov/rac/co/frrac/co_fr.htm.*

John Mehlhoff,

Associate State Director.

[FR Doc. 2010–30062 Filed 12–8–10; 8:45 am]

BILLING CODE 4310–JB–P

DEPARTMENT OF THE INTERIOR

Bureau of Land Management

[LLMT922200–11–L13100000–FI0000–P;MTM 91627]

Notice of Proposed Reinstatement of Terminated Oil and Gas Lease MTM 91627

AGENCY: Bureau of Land Management, Interior.

ACTION: Notice.

SUMMARY: Per 30 U.S.C. 188(d), Antelope Resources Inc. filed a petition for reinstatement of noncompetitive oil and gas lease MTM 91627, Musselshell County, Montana. The lessee paid the required rental accruing from the date of termination.

No leases were issued that affect these lands. The lessee agrees to new lease terms for rentals and royalties of $5 per acre and 16⅔ percent. The lessee paid the $500 administration fee for the reinstatement of the lease and $163 cost for publishing this Notice.

The lessee met the requirements for reinstatement of the lease per Sec. 31 (d) and (e) of the Mineral Leasing Act of 1920 (30 U.S.C. 188). We are proposing to reinstate the lease, effective the date of termination subject to:

- The original terms and conditions of the lease;
- The increased rental of $5 per acre;
- The increased royalty of 16⅔ percent; and
- The $163 cost of publishing this Notice.

FOR FURTHER INFORMATION CONTACT: Teri Bakken, Chief, Fluids Adjudication Section, Bureau of Land Management Montana State Office, 5001 Southgate Drive, Billings, Montana 59101–4669, 406–896–5091.

Teri Bakken,

Chief, Fluids Adjudication Section.

[FR Doc. 2010–30978 Filed 12–8–10; 8:45 am]

BILLING CODE 4310–DN–P

INTERNATIONAL TRADE COMMISSION

Notice of Receipt of Complaint; Solicitation of Comments Relating to the Public Interest

AGENCY: U.S. International Trade Commission.

ACTION: Notice.

SUMMARY: Notice is hereby given that the U.S. International Trade Commission has received a complaint entitled *In Re Certain Handbags, Luggage, Accessories and Packaging Thereof,* DN 2772; the Commission is soliciting comments on any public interest issues raised by the complaint.

FOR FURTHER INFORMATION CONTACT: Marilyn R. Abbott, Secretary to the Commission, U.S. International Trade Commission, 500 E Street, SW., Washington, DC 20436, telephone (202) 205–2000. The public version of the complaint can be accessed on the Commission's electronic docket (EDIS) at *http://edis.usitc.gov,* and will be available for inspection during official business hours (8:45 a.m. to 5:15 p.m.) in the Office of the Secretary, U.S. International Trade Commission, 500 E Street, SW., Washington, DC 20436, telephone (202) 205–2000.

General information concerning the Commission may also be obtained by accessing its Internet server (*http://www.usitc.gov*). The public record for this investigation may be viewed on the Commission's electronic docket (EDIS) at *http://edis.usitc.gov.* Hearing-impaired persons are advised that information on this matter can be obtained by contacting the Commission's TDD terminal on (202) 205–1810.

SUPPLEMENTARY INFORMATION: The Commission has received a complaint filed on behalf of Louis Vuitton Malletier S.A. and Louis Vuitton U.S. Manufacturing, Inc. on December 3, 2010. The complaint alleges violations of section 337 of the Tariff Act of 1930 (19 U.S.C. 1337) in the importation into the United States, the sale for importation, and the sale within the United States after importation of certain handbags, luggage, accessories and packaging thereof. The complaint names as respondents T&T Handbag Industrial Co., Ltd. of Guangzhou, China; Sanjiu Leather Co., Ltd. of Guangzhou of Baiyun District, Guangzhou, China; Meada Corporation (d/b/a Diophy International) of El Monte, CA; Pacpro, Inc. of El Monte, CA; Jianyong Zheng (a/k/a Jiu Gao Zheng, Jiu An Zheng, Jian Yong Zheng, Peter Zheng) of Arcadia, CA; Alice Bei

Wang (a/k/a Alice B. Wang) of Arcadia, CA; Trendy Creations, Inc. of Chatsworth, CA; The Inspired Bagger of Dallas, TX; and House of Bags of Los Angeles, CA.

The complainant, proposed respondents, other interested parties, and members of the public are invited to file comments, not to exceed five pages in length, on any public interest issues raised by the complaint. Comments should address whether issuance of an exclusion order and/or a cease and desist order in this investigation would negatively affect the public health and welfare in the United States, competitive conditions in the United States economy, the production of like or directly competitive articles in the United States, or United States consumers.

In particular, the Commission is interested in comments that:

(i) Explain how the articles potentially subject to the orders are used in the United States;

(ii) Identify any public health, safety, or welfare concerns in the United States relating to the potential orders;

(iii) Indicate the extent to which like or directly competitive articles are produced in the United States or are otherwise available in the United States, with respect to the articles potentially subject to the orders; and

(iv) Indicate whether Complainant, Complainant's licensees, and/or third party suppliers have the capacity to replace the volume of articles potentially subject to an exclusion order and a cease and desist order within a commercially reasonable time.

Written submissions must be filed no later than by close of business, five business days after the date of publication of this notice in the **Federal Register**. There will be further opportunities for comment on the public interest after the issuance of any final initial determination in this investigation.

Persons filing written submissions must file the original document and 12 true copies thereof on or before the deadlines stated above with the Office of the Secretary. Submissions should refer to the docket number ("Docket No. 2772") in a prominent place on the cover page and/or the first page. The Commission's rules authorize filing submissions with the Secretary by facsimile or electronic means only to the extent permitted by section 201.8 of the rules (see Handbook for Electronic Filing Procedures, *http://www.usitc.gov/secretary/fed_reg_notices/rules/documents/handbook_on_electronic_filing.pdf*). Persons with questions regarding electronic filing should contact the Secretary (202–205–2000).

Any person desiring to submit a document to the Commission in confidence must request confidential treatment. All such requests should be directed to the Secretary to the Commission and must include a full statement of the reasons why the Commission should grant such treatment. *See* 19 CFR 201.6. Documents for which confidential treatment by the Commission is properly sought will be treated accordingly. All nonconfidential written submissions will be available for public inspection at the Office of the Secretary.

This action is taken under the authority of section 337 of the Tariff Act of 1930, as amended (19 U.S.C. 1337), and of sections 201.10 and 210.50(a)(4) of the Commission's Rules of Practice and Procedure (19 CFR 201.10, 210.50(a)(4)).

By order of the Commission.

Issued: December 6, 2010.

William R. Bishop,

Acting Secretary to the Commission.

[FR Doc. 2010–30951 Filed 12–8–10; 8:45 am]

BILLING CODE P

INTERNATIONAL TRADE COMMISSION

[Investigation No. 731–TA–841 (Second Review)]

Non-Frozen Apple Juice Concentrate From China

AGENCY: United States International Trade Commission.

ACTION: Termination of five-year review.

SUMMARY: The subject five-year review was initiated in October 2010 to determine whether revocation of the antidumping duty order on non-frozen apple juice concentrate from China would be likely to lead to continuation or recurrence of material injury. On November 15, 2010, the Department of Commerce published notice that it was revoking the order effective November 2, 2010, "{b}ecause the domestic interested parties did not participate in this sunset review * * *" (75 FR 69628). Accordingly, pursuant to section 751(c) of the Tariff Act of 1930 (19 U.S.C. 1675(c)), the subject review is terminated.

DATES: *Effective Date:* November 2, 2010.

FOR FURTHER INFORMATION CONTACT: Mary Messer (202–205–3193), Office of Investigations, U.S. International Trade Commission, 500 E Street SW., Washington, DC 20436. Hearing-impaired individuals are advised that information on this matter can be obtained by contacting the Commission's TDD terminal on 202–205–1810. Persons with mobility impairments who will need special assistance in gaining access to the Commission should contact the Office of the Secretary at 202–205–2000. General information concerning the Commission may also be obtained by accessing its Internet server (*http://www.usitc.gov*).

Authority: This review is being terminated under authority of title VII of the Tariff Act of 1930; this notice is published pursuant to section 207.69 of the Commission's rules (19 CFR 207.69).

By order of the Commission.

Issued: December 3, 2010.

Marilyn R. Abbott,

Secretary to the Commission.

[FR Doc. 2010–30906 Filed 12–8–10; 8:45 am]

BILLING CODE 7020–02–P

DEPARTMENT OF JUSTICE

Notice of Lodging of Consent Decree Under the Residential Lead-Based Paint Hazard Reduction Act

Notice is hereby given that on December 3, 2010 a proposed Consent Decree in *United States* v. *Combined Development Co. I, LLC, et al.,* Civil Action No. 1:10-cv-853 was lodged with the United States District Court for the Southern District of Ohio.

The consent decree settles claims against the owners and managers of 166 housing units in nine separate properties located in or near Cincinnati, Ohio. The claims were brought on behalf of the Environmental Protection Agency ("U.S. EPA") and the Department of Housing and Urban Development ("HUD") under the Residential Lead-Based Paint Hazard Reduction Act, 42 U.S.C. 4851 *et seq.* ("Lead Hazard Reduction Act"). The United States alleged in the complaint that the Defendants failed to make one or more of the disclosures or to complete one or more of the disclosure activities required by the Lead Hazard Reduction Act.

Under the Consent Decree, the Defendants will certify that they are complying with residential lead paint notification requirements. The Defendants will submit a plan for window replacement work and will replace all windows known to or believed to contain lead-based paint in all residential properties owned or managed by Defendants that are not certified lead-based paint free. In

addition, Defendants will abate lead-based paint hazards on friction and impact surfaces, stabilize other lead-based paint hazards, and pay an administrative penalty of $7,500.

The Department of Justice will receive for a period of thirty (30) days from the date of this publication comments relating to the Proposed Consent Decree. Comments should be addressed to the Assistant Attorney General, Environment and Natural Resources Division, and either e-mailed to *pubcomment-ees.enrd@usdoj.gov* or mailed to U.S. Department of Justice, Washington, DC 20044–7611 P.O. Box 7611, U.S. Department of Justice, Washington, DC 20044–7611, and should refer to *United States* v. *Combined Development Co. I, LLC, et al.,* D.J. Ref. # 90–5–1–1–09435.

The Proposed Consent Decree may be examined at the Department of Housing and Urban Development, Office of General Counsel, 451 7th St. NW., Room 9262, Washington, DC 20410; at the office of the United States Attorney for the Southern District of Ohio, 303 Marconi Blvd., Suite 200, Columbus, Ohio 43215 (Attn. Assistant United States Attorney Andrew M. Malek); and at U.S. EPA Region 5, 77 W. Jackson Blvd., Chicago, IL 60604. During the public comment period, the Consent Decree may also be examined on the following Department of Justice Web site, to *http://www.usdoj.gov/enrd/Consent_Decrees.html.* A copy of the Consent Decree may also be obtained by mail from the Consent Decree Library, P.O. Box 7611, U.S. Department of Justice, Washington, DC 20044–7611 or by faxing or e-mailing a request to Tonia Fleetwood (*tonia.fleetwood@usdoj.gov*), fax no. (202) 514–0097, phone confirmation number (202) 514–1547. In requesting a copy from the Consent Decree Library, please enclose a check in the amount of $9.25 (25 cents per page reproduction cost) payable to the U.S. Treasury or, if by e-mail or fax, forward a check in that amount to the Consent Decree Library at the stated address.

Maureen Katz,

Assistant Chief, Environmental Enforcement Section, Environment and Natural Resources Division.

[FR Doc. 2010–30900 Filed 12–8–10; 8:45 am]

BILLING CODE 4410–15–P

DEPARTMENT OF JUSTICE

Drug Enforcement Administration

Importer of Controlled Substances; Notice of Application

Pursuant to 21 U.S.C. 958(i), the Attorney General shall, prior to issuing a registration under this Section to a bulk manufacturer of a controlled substance in schedule I or II, and prior to issuing a regulation under 21 U.S.C. 952(a)(2) authorizing the importation of such a substance, provide manufacturers holding registrations for the bulk manufacture of the substance an opportunity for a hearing.

Therefore, in accordance with 21 CFR 1301.34(a), this is notice that on October 19, 2010, Mylan Pharmaceuticals, Inc., 781 Chestnut Ridge Road, Morgantown, West Virginia 26505, made application by renewal to the Drug Enforcement Administration (DEA) to be registered as an importer of the basic classes of controlled substances listed in schedule II:

Drug	Schedule
Methylphenidate (1724)	II
Oxycodone (9143)	II
Hydromorphone (9150)	II
Fentanyl (9801)	II

The company plans to import the listed controlled substances in finished dosage form (FDF) from foreign sources for analytical testing and clinical trials in which the foreign FDF will be compared to the company's own domestically-manufactured FDF. This analysis is required to allow the company to export domestically-manufactured FDF to foreign markets.

Any bulk manufacturer who is presently, or is applying to be, registered with DEA to manufacture such basic class of controlled substance may file comments or objections to the issuance of the proposed registration and may, at the same time, file a written request for a hearing on such application pursuant to 21 CFR 1301.43, and in such form as prescribed by 21 CFR 1316.47.

Any such comments or objections should be addressed, in quintuplicate, to the Drug Enforcement Administration, Office of Diversion Control, Federal Register Representative (ODL), 8701 Morrissette Drive, Springfield, Virginia 22152; and must be filed no later than January 10, 2011.

This procedure is to be conducted simultaneously with, and independent of, the procedures described in 21 CFR § 1301.34(b), (c), (d), (e), and (f). As noted in a previous notice published in the **Federal Register** on September 23, 1975, (40 FR 43745–46), all applicants for registration to import a basic class of any controlled substance in schedule I or II are, and will continue to be, required to demonstrate to the Deputy Assistant Administrator, Office of Diversion Control, Drug Enforcement Administration, that the requirements for such registration pursuant to 21 U.S.C. 958(a); 21 U.S.C. 823(a); and 21 CFR 1301.34(b), (c), (d), (e), and (f) are satisfied.

Dated: November 29, 2010.

Joseph T. Rannazzisi,

Deputy Assistant Administrator, Office of Diversion Control, Drug Enforcement Administration.

[FR Doc. 2010–30901 Filed 12–8–10; 8:45 am]

BILLING CODE 4410–09–P

DEPARTMENT OF JUSTICE

Drug Enforcement Administration

Importer of Controlled Substances; Notice of Registration

By Notice dated August 3, 2010, and published in the **Federal Register** on September 1, 2010, (75 FR 53719), Alltech Associates, Inc., 2051 Waukegan Road, Deerfield, Illinois 60015, made application by renewal to the Drug Enforcement Administration (DEA) to be registered as an importer of the basic classes of controlled substances:

Drug	Schedule
Gamma Hydroxybutyric Acid (2010).	I
Heroin (9200)	I
Cocaine (9041)	II
Codeine (9050)	II
Hydrocodone (9193)	II
Meperidine (9230)	II
Methadone (9250)	II
Morphine (9300)	II

The company plans to import these controlled substances for the manufacture of reference standards.

No comments or objections have been received. DEA has considered the factors in 21 U.S.C. 823(a) and 952(a) and determined that the registration of Alltech Associates, Inc. to import the basic classes of controlled substances is consistent with the public interest and with United States obligations under international treaties, conventions, or protocols in effect on May 1, 1971. DEA has investigated Alltech Associates, Inc. to ensure that the company's registration is consistent with the public interest. The investigation has included inspection and testing of the company's physical security systems, verification

of the company's compliance with state and local laws, and a review of the company's background and history. Therefore, pursuant to 21 U.S.C. 952(a) and 958(a), and in accordance with 21 CFR 1301.34, the above named company is granted registration as an importer of the basic classes of controlled substances listed.

Dated: November 29, 2010.

Joseph T. Rannazzisi,

Deputy Assistant Administrator, Office of Diversion Control, Drug Enforcement Administration.

[FR Doc. 2010–30897 Filed 12–8–10; 8:45 am]

BILLING CODE 4410–09–P

DEPARTMENT OF JUSTICE

Drug Enforcement Administration

Manufacturer of Controlled Substances; Notice of Registration

By Notice dated July 19, 2010, and published in the **Federal Register** on July 28, 2010, (75 FR 44285), Johnson Matthey Pharmaceutical Materials, Inc., Pharmaceuticals Service, 25 Patton Road, Devens, Massachusetts 01434, made application by letter to the Drug Enforcement Administration (DEA) to be registered as a bulk manufacturer of the basic classes of controlled substances:

Drug	Schedule
Amphetamine (1100)	II
Methylphenidate (1724)	II
Nabilone (7379)	II
Alfentanil (9737)	II
Sufentanil (9740)	II
Remifentanil (9739)	II
Hydrocodone (9193)	II

The company plans to utilize this facility to manufacture small quantities of the listed controlled substances in bulk and to conduct analytical testing in support of the company's primary manufacturing facility in West Deptford, New Jersey. The controlled substances manufactured in bulk at this facility will be distributed to the company's customers.

No comments or objections have been received. DEA has considered the factors in 21 U.S.C. 823(a) and determined that the registration of Johnson Matthey Pharmaceutical Materials, Inc. to manufacture the listed basic classes of controlled substances is consistent with the public interest at this time. DEA has investigated Johnson Matthey Pharmaceutical Materials, Inc. to ensure that the company's registration is consistent with the public interest. The investigation has included inspection and testing of the company's physical security systems, verification of the company's compliance with state and local laws, and a review of the company's background and history. Therefore, pursuant to 21 U.S.C. 823(a), and in accordance with 21 CFR 1301.33, the above named company is granted registration as a bulk manufacturer of the basic classes of controlled substances listed.

Dated: November 29, 2010.

Joseph T. Rannazzisi,

Deputy Assistant Administrator, Office of Diversion Control, Drug Enforcement Administration.

[FR Doc. 2010–30904 Filed 12–8–10; 8:45 am]

BILLING CODE 4410–09–P

DEPARTMENT OF JUSTICE

Drug Enforcement Administration

Manufacturer of Controlled Substances; Notice of Registration

By Notice dated March 16, 2010, and published in the Federal Register on March 24, 2010, (75 FR 14189), Norac Inc., 405 S. Motor Avenue, P.O. Box 577, Azusa, California 91702–3232, made application by renewal to the Drug Enforcement Administration (DEA) to be registered as a bulk manufacturer of the basic classes of controlled substances:

Drug	Schedule
Gamma Hydroxybutyric Acid (2010).	I
Tetrahydrocannabinols (7370)	I
Methamphetamine (1105)	II
Nabilone (7379)	II

With regard to Gamma Hydroxybutyric Acid (2010), Tetrahydrocannabinols (7370), and Methamphetamine (1105) only, the company manufactures these controlled substances in bulk solely for domestic distribution within the United States to customers engaged in dosage-form manufacturing.

With regard to Nabilone (7379) only, the company presently manufactures a small amount of this controlled substance in bulk solely to conduct manufacturing process development internally within the company. It is the company's intention that, when the manufacturing process is refined to the point that its Nabilone bulk product is available for commercial use, the company will export the controlled substance in bulk solely to customers engaged in dosage-form manufacturing outside the United States. The company is aware of the requirement to obtain a DEA registration as an exporter to conduct this activity.

No comments or objections have been received. DEA has considered the factors in 21 U.S.C. 823(a) and determined that the registration of Norac, Inc. to manufacture the listed basic classes of controlled substances is consistent with the public interest at this time. DEA has investigated Norac, Inc. to ensure that the company's registration is consistent with the public interest. The investigation has included inspection and testing of the company's physical security systems, verification of the company's compliance with state and local laws, and a review of the company's background and history. Therefore, pursuant to 21 U.S.C. 823(a), and in accordance with 21 CFR 1301.33, the above named company is granted registration as a bulk manufacturer of the basic classes of controlled substances listed.

Dated: November 29, 2010.

Joseph T. Rannazzisi,

Deputy Assistant Administrator, Office of Diversion Control, Drug Enforcement Administration.

[FR Doc. 2010–30903 Filed 12–8–10; 8:45 am]

BILLING CODE 4410–09–P

DEPARTMENT OF JUSTICE

Drug Enforcement Administration

Manufacturer of Controlled Substances; Notice of Registration

By Notice dated July 23, 2010, and published in the **Federal Register** on August 4, 2010, (75 FR 47029), Johnson Matthey Pharma Services, 70 Flagship Drive, North Andover, Massachusetts 01845, made application by letter to the Drug Enforcement Administration (DEA) to be registered as a bulk manufacturer of the basic classes of controlled substances:

Drug	Schedule
Amphetamine (1100)	II
Methylphenidate (1724)	II
Hydrocodone (9193)	II

The company plans to utilize this facility to manufacture small quantities of the listed controlled substances in bulk and to conduct analytical testing in support of the company's primary manufacturing facility in West Deptford, New Jersey. The controlled substances manufactured in bulk at this facility will be distributed to the company's customers.

No comments or objections have been received. DEA has considered the factors in 21 U.S.C. 823(a) and

determined that the registration of Johnson Matthey Pharma Services to manufacture the listed basic classes of controlled substances is consistent with the public interest at this time. DEA has investigated Johnson Matthey Pharma Services to ensure that the company's registration is consistent with the public interest. The investigation has included inspection and testing of the company's physical security systems, verification of the company's compliance with state and local laws, and a review of the company's background and history. Therefore, pursuant to 21 U.S.C. 823(a), and in accordance with 21 CFR 1301.33, the above named company is granted registration as a bulk manufacturer of the basic classes of controlled substances listed.

Dated: November 29, 2010.

Joseph T. Rannazzisi,

Deputy Assistant Administrator, Office of Diversion Control, Drug Enforcement Administration.

[FR Doc. 2010–30899 Filed 12–8–10; 8:45 am]

BILLING CODE 4410–09–P

NATIONAL SCIENCE FOUNDATION

National Science Board; Sunshine Act Meetings; Notice

The National Science Board's Subcommittee on Facilities, pursuant to NSF regulations (45 CFR Part 614), the National Science Foundation Act, as amended (42 U.S.C. 1862n–5), and the Government in the Sunshine Act (5 U.S.C. 552b), hereby gives notice in regard to the scheduling of a meeting for the transaction of National Science Board business and other matters specified, as follows:

DATE: December 15, 2010.

TIME AND SUBJECT MATTER OPEN: 11 a.m. to 12:30 p.m.

- NSF Principles & Portfolio Review
- Future Budgetary Issues FY 2012 and beyond

STATUS: Closed.

LOCATION: The closed session of this teleconference will be held at the National Science Foundation, 4201 Wilson Blvd., Arlington, VA 22230.

UPDATES AND POINT OF CONTACT: Please refer to the National Science Board Web site *http://www.nsf.gov/nsb* for additional information and schedule updates (time, place, subject matter or status of meeting) may be found at *http://www.nsf.gov/nsb/notices/.* Point of contact for this meeting is: Jennie Moehlmann, National Science Board Office, 4201 Wilson Blvd., Arlington, VA 22230. *Telephone:* (703) 292–7000.

Daniel A. Lauretano,

Counsel to the National Science Board.

[FR Doc. 2010–31067 Filed 12–7–10; 4:15 pm]

BILLING CODE 7555–01–P

NUCLEAR REGULATORY COMMISSION

[Docket Nos. 50–498, 50–499; NRC–2010–0375]

STP Nuclear Operating Company; Notice of Receipt and Availability of Application for Renewal of South Texas Project, Units 1 and 2; Facility Operating License Nos. NPF–76 and NPF–80 for an Additional 20-Year Period

The U.S. Nuclear Regulatory Commission (NRC or Commission) has received an application, dated October 25, 2010, from STP Nuclear Operating Company, filed pursuant to Section 103 of the Atomic Energy Act of 1954, as amended, and Title 10 of the *Code of Federal Regulations* part 54 (10 CFR part 54), to renew the operating licenses for the South Texas Project (STP), Units 1 and 2. Renewal of the licenses would authorize the applicant to operate each facility for an additional 20-year period beyond the period specified in the respective current operating licenses. The current operating license for STP Unit 1 (NPF–76) expires on August 20, 2027. STP Unit 1 is a pressurized water reactor designed by Westinghouse. The current operating license for STP Unit 2 expires on December 15, 2028. STP Unit 2 is a pressurized water reactor designed by Westinghouse. Both units are located 12 miles south southwest of Bay City, TX. The acceptability of the tendered application for docketing, and other matters including an opportunity to request a hearing, will be the subject of subsequent **Federal Register** notices.

Copies of the application are available to the public at the Commission's Public Document Room (PDR), located at One White Flint North, 11555 Rockville Pike, Rockville, Maryland 20852 or through the Internet from the NRC's Agencywide Documents Access and Management System (ADAMS) Public Electronic Reading Room under Accession Number ML103010256. The ADAMS Public Electronic Reading Room is accessible from the NRC Web site at *http://www.nrc.gov/reading-rm/adams.html.* In addition, the application is available at *http://www.nrc.gov/reactors/operating/licensing/renewal/applications.html.* Persons who do not have access to the Internet or who encounter problems in accessing the documents located in ADAMS should contact the NRC's PDR reference staff at 1–800–397–4209, extension 4737, or by e-mail to *pdr@nrc.gov.*

A copy of the license renewal application for the STP, Units 1 and 2, is also available to local residents near the site at the Bay City Public Library, 1100 7th Street, Bay City, TX 77414.

Dated at Rockville, Maryland, this 23rd day of November, 2010.

For the Nuclear Regulatory Commission.

A. Louise Lund,

Acting Deputy Director, Division of License Renewal, Office of Nuclear Reactor Regulation.

[FR Doc. 2010–30956 Filed 12–8–10; 8:45 am]

BILLING CODE 7590–01–P

NUCLEAR REGULATORY COMMISSION

Licensing Support System Advisory Review Panel

AGENCY: U.S. Nuclear Regulatory Commission.

ACTION: Notice of renewal of the Charter of the Licensing Support Network Advisory Review Panel (LSNARP).

SUMMARY: The Licensing Support System Advisory Review Panel was established by the U.S. Nuclear Regulatory Commission as a Federal Advisory Committee in 1989. Its purpose was to provide advice on the fundamental issues of design and development of an electronic information management system to be used to store and retrieve documents relating to the licensing of a geologic repository for the disposal of high-level radioactive waste, and on the operation and maintenance of the system. This electronic information management system was known as the Licensing Support System (LSS). In November, 1998 the Commission approved amendments to 10 CFR part 2 that renamed the Licensing Support System Advisory Review Panel as the Licensing Support Network Advisory Review Panel. The Licensing Support Network (LSN) in use since 2004 and now contains over 4 million documents associated the proposed high-level waste facility.

Membership on the Panel will continue to be drawn from those interests that will be affected by the use of the LSN, including the Department of Energy, the NRC, the State of Nevada, the National Congress of American Indians, affected units of local governments in Nevada, the Nevada Nuclear Waste Task Force, and a

coalition of nuclear industry groups. Federal agencies with expertise and experience in electronic information management systems may also participate on the Panel.

The Nuclear Regulatory Commission has determined that renewal of the charter for the LSNARP until December 3, 2012 is in the public interest in connection with duties imposed on the Commission by law. This action is being taken in accordance with the Federal Advisory Committee Act after consultation with the Committee Management Secretariat, General Services Administration.

FOR FURTHER INFORMATION CONTACT: Andrew L. Bates, Office of the Secretary, U.S. Nuclear Regulatory Commission, Washington, DC 20555: Telephone 301–415–1963.

Dated: December 3, 2010.

Andrew L. Bates,

Advisory Committee Management Officer.

[FR Doc. 2010–30955 Filed 12–8–10; 8:45 am]

BILLING CODE 7590–01–P

OVERSEAS PRIVATE INVESTMENT CORPORATION

Sunshine Act; OPIC Annual Public Hearing

TIME AND DATE: 3:30 p.m., Thursday, January 20, 2011.

PLACE: Offices of the Corporation, Twelfth Floor Board Room, 1100 New York Avenue, NW., Washington, DC.

STATUS: Hearing OPEN to the Public at 3:30 p.m.

PURPOSE: Annual Public Hearing to afford an opportunity for any person to present views regarding the activities of the Corporation.

PROCEDURES: Individuals wishing to address the hearing orally must provide advance notice to OPIC's Corporate Secretary no later than 5 PM Monday, January 10, 2011. The notice must include the individual's name, title, organization, address, and telephone number, and a concise summary of the subject matter to be presented.

Oral presentations may not exceed ten (10) minutes. The time for individual presentations may be reduced proportionately, if necessary, to afford all participants who have submitted a timely request an opportunity to be heard.

Participants wishing to submit a written statement for the record must submit a copy of such statement to OPIC's Corporate Secretary no later than 5 PM Monday, January 10, 2011. Such statement must be typewritten, double-spaced, and may not exceed twenty-five (25) pages.

Upon receipt of the required notice, OPIC will prepare an agenda for the hearing identifying speakers, setting forth the subject on which each participant will speak, and the time allotted for each presentation. The agenda will be available at the hearing.

A written summary of the hearing will be compiled, and such summary will be made available, upon written request to OPIC's Corporate Secretary, at the cost of reproduction.

CONTACT PERSON FOR INFORMATION: Information on the hearing may be obtained from Connie M. Downs at (202) 336–8438, via e-mail at *connie.downs@opic.gov.,* or via facsimile at (202) 218–0136.

SUPPLEMENTARY INFORMATION: OIC is a U.S. Government agency that provides, on a commercial basis, political risk insurance and financing in friendly developing countries and emerging democracies for environmentally sound projects that confer positive developmental benefits upon the project country while creating employment in the U.S. OPIC is required by section 231A(c) of the Foreign Assistance Act of 1961, as amended (the "Act") to hold at least one public hearing each year.

Dated: December 7, 2010.

Connie M. Downs,

OPIC Corporate Secretary.

[FR Doc. 2010–31095 Filed 12–7–10; 4:15 pm]

BILLING CODE 3210–01–P

SECURITIES AND EXCHANGE COMMISSION

[Release No. 34–63430; File No. 4–618]

Program for Allocation of Regulatory Responsibilities Pursuant to Rule 17d–2; Order Approving and Declaring Effective a Plan for the Allocation of Regulatory Responsibilities Between BATS Exchange, Inc., BATS Y-Exchange, Inc., Chicago Board Options Exchange, Inc., Chicago Stock Exchange, Inc., EDGA Exchange, Inc., EDGX Exchange, Inc., Financial Industry Regulatory Authority, Inc., The NASDAQ Stock Market LLC, NASDAQ OMX BX, Inc., NASDAQ OMX PHLX LLC, National Stock Exchange, Inc., New York Stock Exchange LLC, NYSE Amex LLC, and NYSE Arca, Inc. Relating to Regulation NMS Rules

December 3, 2010.

On October 15, 2010, BATS Exchange, Inc. ("BATS"), BATS Y-Exchange, Inc. ("BATS Y"), Chicago Board Options Exchange, Inc. ("CBOE"),[1] Chicago Stock Exchange, Inc. ("CHX"), EDGA Exchange, Inc. ("EDGA"), EDGX Exchange, Inc. ("EDGX"), Financial Industry Regulatory Authority, Inc. ("FINRA"), The NASDAQ Stock Market LLC ("NASDAQ"), NASDAQ OMX BX, Inc. ("BX"), NASDAQ OMX PHLX LLC ("PHLX"), National Stock Exchange, Inc. ("NSX"), New York Stock Exchange LLC ("NYSE"), NYSE Amex LLC ("NYSE Amex"), and NYSE Arca, Inc. ("NYSE Arca") (together, the "Participating Organizations" or the "Parties") filed with the Securities and Exchange Commission ("Commission" or "SEC") a plan for the allocation of regulatory responsibilities with respect to certain Regulation NMS Rules ("17d–2 Plan" or the "Plan"). The Plan was published for comment on November 8, 2010.[2] The Commission received no comments on the Plan. This order approves and declares effective the Plan.

I. Introduction

Section 19(g)(1) of the Securities Exchange Act of 1934 ("Act"),[3] among other things, requires every self-regulatory organization ("SRO") registered as either a national securities exchange or national securities association to examine for, and enforce compliance by, its members and persons associated with its members with the Act, the rules and regulations thereunder, and the SRO's own rules, unless the SRO is relieved of this responsibility pursuant to Section 17(d) or Section 19(g)(2) of the Act.[4] Without this relief, the statutory obligation of each individual SRO could result in a pattern of multiple examinations of broker-dealers that maintain memberships in more than one SRO ("common members"). Such regulatory duplication would add unnecessary expenses for common members and their SROs.

Section 17(d)(1) of the Act[5] was intended, in part, to eliminate unnecessary multiple examinations and regulatory duplication.[6] With respect to a common member, Section 17(d)(1) authorizes the Commission, by rule or order, to relieve an SRO of the

[1] CBOE's allocation of certain regulatory responsibilities under this Agreement is limited to the activities of the CBOE Stock Exchange, LLC, a facility of CBOE.

[2] *See* Securities Exchange Act Release No. 63230 (November 2, 2010), 75 FR 68632.

[3] 15 U.S.C. 78s(g)(1).

[4] 15 U.S.C. 78q(d) and 15 U.S.C. 78s(g)(2), respectively.

[5] 15 U.S.C. 78q(d)(1).

[6] *See* Securities Act Amendments of 1975, Report of the Senate Committee on Banking, Housing, and Urban Affairs to Accompany S. 249, S. Rep. No. 94–75, 94th Cong., 1st Session 32 (1975).

responsibility to receive regulatory reports, to examine for and enforce compliance with applicable statutes, rules, and regulations, or to perform other specified regulatory functions.

To implement Section 17(d)(1), the Commission adopted two rules: Rule 17d–1 and Rule 17d–2 under the Act.[7] Rule 17d–1 authorizes the Commission to name a single SRO as the designated examining authority ("DEA") to examine common members for compliance with the financial responsibility requirements imposed by the Act, or by Commission or SRO rules.[8] When an SRO has been named as a common member's DEA, all other SROs to which the common member belongs are relieved of the responsibility to examine the firm for compliance with the applicable financial responsibility rules. On its face, Rule 17d–1 deals only with an SRO's obligations to enforce member compliance with financial responsibility requirements. Rule 17d–1 does not relieve an SRO from its obligation to examine a common member for compliance with its own rules and provisions of the federal securities laws governing matters other than financial responsibility, including sales practices and trading activities and practices.

To address regulatory duplication in these and other areas, the Commission adopted Rule 17d–2 under the Act.[9] Rule 17d–2 permits SROs to propose joint plans for the allocation of regulatory responsibilities with respect to their common members. Under paragraph (c) of Rule 17d–2, the Commission may declare such a plan effective if, after providing for appropriate notice and comment, it determines that the plan is necessary or appropriate in the public interest and for the protection of investors; to foster cooperation and coordination among the SROs; to remove impediments to, and foster the development of, a national market system and a national clearance and settlement system; and is in conformity with the factors set forth in Section 17(d) of the Act. Commission approval of a plan filed pursuant to Rule 17d–2 relieves an SRO of those regulatory responsibilities allocated by the plan to another SRO.

II. Proposed Plan

The proposed 17d–2 Plan is intended to reduce regulatory duplication for firms that are members of more than one Party to the proposed 17d–2 Plan. Pursuant to the proposed 17d–2 Plan, the Designated Regulation NMS Examining Authority ("DREA") would assume examination and enforcement responsibilities for broker-dealers that are members of more than one Participating Organization ("Common Members") with respect to certain applicable laws, rules, and regulations. FINRA would serve as the DREA for Common Members that are members of FINRA. The DEA would serve as the DREA for Common Members that are not members of FINRA.

The text of the Plan delineates the proposed regulatory responsibilities with respect to the Parties. Included in the proposed Plan is an exhibit (the "Covered Regulation NMS Rules") that lists the Federal securities laws, rules, and regulations, for which the DREA would bear responsibility under the Plan for overseeing and enforcing with respect to Common Members.

Specifically, under the 17d–2 Plan, the DREA would assume examination and enforcement responsibility relating to compliance by Common Members with the Covered Regulation NMS Rules. Under the Plan, each Participating Organization would retain full responsibility for examination, surveillance and enforcement with respect to trading activities or practices involving its own marketplace, unless otherwise allocated pursuant to a separate Rule 17d–2 agreement.[10]

III. Discussion

The Commission finds that the proposed Plan is consistent with the factors set forth in Section 17(d) of the Act[11] and Rule 17d–2(c) thereunder[12] in that the proposed Plan is necessary or appropriate in the public interest and for the protection of investors, fosters cooperation and coordination among SROs, and removes impediments to and fosters the development of the national market system. In particular, the Commission believes that the proposed Plan should reduce unnecessary regulatory duplication by allocating to the DREA certain examination and enforcement responsibilities for Common Members that would otherwise be performed by each Party.[13] Accordingly, the proposed Plan promotes efficiency by reducing costs to Common Members. Furthermore, because the Parties will coordinate their regulatory functions in accordance with the proposed Plan, the Plan should promote investor protection.[14]

The Commission is hereby declaring effective a plan that allocates regulatory responsibility for certain provisions of the federal securities laws, rules, and regulations as set forth in Exhibit A to the Plan. The Commission notes that any amendment to the Plan must be approved by the relevant Parties as set forth in Paragraph 22 of the Plan and must be filed with and approved by the Commission before it may become effective.[15]

IV. Conclusion

This Order gives effect to the Plan filed with the Commission in File No. 4–618. The Parties shall notify all members affected by the Plan of their rights and obligations under the Plan.

It is therefore ordered, pursuant to Section 17(d) of the Act, that the Plan in File No. 4–618 is hereby approved and declared effective.

It is further ordered that the Parties who are not the DREA as to a particular Common Member are relieved of those regulatory responsibilities allocated to the Common Member's DREA under the Plan to the extent of such allocation.

For the Commission, by the Division of Trading and Markets, pursuant to delegated authority.[16]

Florence E. Harmon,

Deputy Secretary.

[FR Doc. 2010–30946 Filed 12–8–10; 8:45 am]

BILLING CODE 8011–01–P

[7] 17 CFR 240.17d–1 and 17 CFR 240.17d–2, respectively.

[8] *See* Securities Exchange Act Release No. 12352 (April 20, 1976), 41 FR 18808 (May 7, 1976).

[9] *See* Securities Exchange Act Release No. 12935 (October 28, 1976), 41 FR 49091 (November 8, 1976).

[10] *See* Paragraph 1 of the proposed 17d–2 Plan; *see e.g.,* Securities Exchange Act Release No. 58350 (August 13, 2008), 73 FR 48247 (August 18, 2008) (File No. 4–566) (notice of filing of proposed insider trading plan) and Securities Exchange Act Release No. 58536 (September 12, 2008) (File No. 4–566) (order approving and declaring effective the plan).

[11] 15 U.S.C. 78q(d).

[12] 17 CFR 240.17d–2(c).

[13] Paragraph 1 of the Plan provides that whenever a Common Member ceases to be a member of its DREA, the DREA shall promptly inform the Common Member's DEA, which will become such Common Member's DEA.

[14] *See, e.g.,* Paragraph 7 of the Plan (Sharing of Work Papers, Data and Related Information) and Paragraph 5 (sharing of customer complaints).

[15] *See* Paragraph 22 of the Plan.

[16] 17 CFR 200.30–3(a)(34).

SECURITIES AND EXCHANGE COMMISSION

[Release No. 34–63418; File No. SR–NYSEAmex–2010–108]

Self-Regulatory Organizations; NYSE Amex LLC; Notice of Filing and Immediate Effectiveness of Proposed Rule Change To Eliminate Market and Stop Orders in Nasdaq-Listed Securities Traded on the Exchange

December 2, 2010.

Pursuant to Section 19(b)(1) of the Securities Exchange Act of 1934 (the

"Act") [1] and Rule 19b–4 thereunder,[2] notice is hereby given that on November 22, 2010, NYSE Amex LLC (the "Exchange" or "NYSE Amex") filed with the Securities and Exchange Commission (the "Commission") the proposed rule change as described in Items I and II below, which Items have been prepared by the Exchange. The Commission is publishing this notice to solicit comments on the proposed rule change from interested persons.

I. Self-Regulatory Organization's Statement of the Terms of Substance of the Proposed Rule Change

The Exchange proposes to amend Rule 501—NYSE Amex Equities to eliminate Market and Stop Orders in Nasdaq-listed securities traded on the Exchange. The text of the proposed rule change is available at the Exchange's principal office, the Commission's Public Reference Room, and *http://www.nyse.com.*

II. Self-Regulatory Organization's Statement of the Purpose of, and Statutory Basis for, the Proposed Rule Change

In its filing with the Commission, the self-regulatory organization included statements concerning the purpose of, and basis for, the proposed rule change and discussed any comments it received on the proposed rule change. The text of those statements may be examined at the places specified in Item IV below. The Exchange has prepared summaries, set forth in sections A, B, and C below, of the most significant parts of such statements.

A. Self-Regulatory Organization's Statement of the Purpose of, and the Statutory Basis for, the Proposed Rule Change

1. Purpose

The purpose of this proposed rule change is to amend Rule 501—NYSE Amex Equities to eliminate Market and Stop Orders in Nasdaq-listed securities traded on the Exchange.

Background

Rules 500–525—NYSE Amex Equities, as a pilot program, govern the trading of any Nasdaq-listed security on the Exchange pursuant to unlisted trading privileges ("UTP Pilot Program").[3] The UTP Pilot Program includes any security listed on Nasdaq that (i) is designated as an "eligible security" under the Joint Self-Regulatory Organization Plan Governing the Collection, Consolidation and Dissemination of Quotation and Transaction Information for Nasdaq-Listed Securities Traded on Exchanges on an Unlisted Trading Privilege Basis, as amended ("UTP Plan"),[4] and (ii) has been admitted to dealings on the Exchange pursuant to a grant of unlisted trading privileges in accordance with Section 12(f) of the Securities Exchange Act of 1934, as amended (the "Act") [5] (collectively, "Nasdaq Securities").[6]

Rule 501—NYSE Amex Equities (Definitions)

Rule 501—NYSE Amex Equities provides certain defined terms, the meanings of which are applicable for trading in Nasdaq Securities. All other defined terms used in Rules 500–525—NYSE Amex Equities have the meanings assigned to them in the NYSE Amex Equities Rules. Rule 501(e)(2)—NYSE Amex Equities lists specific order types that are not accepted for trading in Nasdaq Securities and are therefore not considered "Orders" under the UTP Pilot Program. The Exchange proposes to include "Market Orders" and "Stop Orders" within Rule 501(e)(2)—NYSE Amex Equities, therefore eliminating submission of such order types in Nasdaq Securities and likewise excluding them from the definition of Order under the UTP Pilot Program.

Market and Stop Orders in Nasdaq Securities

Currently, if the Exchange is at the National Best Bid or Offer ("NBBO"), a Market Order submitted in a Nasdaq Security will execute against available contra-side liquidity at that best price. If size remains unfilled, and another market is similarly at the NBBO, the Market Order will route for execution against the away market's protected bid or offer, in accordance with Rule 611 of Regulation NMS.[7] If size still remains unfilled after routing, the Market Order will return to the Exchange and execute against the depth of the Exchange's book, until it is either fully executed or available liquidity on the Exchange is depleted. The Exchange notes that, as provided under Rule 501(e)(1)(B)—NYSE Amex Equities, a Stop Order to buy (sell) becomes a Market Order, and is treated as such for purposes of execution and routing, when a transaction in the Nasdaq Security occurs on the Exchange at or above (below) the stop price after the order is received in to the Exchange's automated order routing system or is manually represented by a Floor broker in the Crowd.

Nasdaq Securities are thinly traded on the Exchange, which is not the primary listing market, and account for less than 1% of total volume in such securities across all markets. This lack of depth in liquidity combined with the manner in which Market Orders (and Stop Orders that become Market Orders) in Nasdaq Securities execute, route and re-execute at the Exchange, creates the potential for multiple rapid executions on the Exchange at increasingly inferior prices, until the Market Order (or Stop Order that becomes a Market Order) is fully executed. Submission of a large Market Order in a Nasdaq Security that results in several executions on the Exchange at increasingly inferior prices could potentially trigger individual stock volatility trading pauses,[8] raise questions of whether the execution should be busted under the Exchange's clearly erroneous rule [9] or create other

[1] 15 U.S.C. 78s(b)(1).

[2] 17 CFR 240.19b–4.

[3] The UTP Pilot Program is currently scheduled to expire on the earlier of Commission approval to make such pilot permanent or January 31, 2011. *See* Securities Exchange Act Release No. 62857 (September 7, 2010), 75 FR 55837 (September 14, 2010) (SR–NYSEAmex–2010–89) (Notice of Filing and Immediate Effectiveness of Proposed Rule Change to Extend the Pilot Program that Allows Nasdaq Stock Market Securities to be Traded on the Exchange Pursuant to UTP). *See also* Securities Exchange Act Release No. 62479 (July 9, 2010), 75 FR 41264 (July 15, 2010) (SR–NYSEAmex–2010–31) (Notice of Filing of Amendment Nos. 2 and 3, and Order Granting Accelerated Approval to a Proposed Rule Change, as Modified by Amendment Nos. 1, 2, and 3 Thereto, To Adopt as a Pilot Program a New Rule Series for the Trading of Securities Listed on the Nasdaq Stock Market Pursuant to Unlisted Trading Privileges) ("UTP Pilot Program Approval Order").

[4] *See* Securities Exchange Act Release No. 58863 (October 27, 2008), 73 FR 65417 (November 3, 2008) (Notice of Filing and Immediate Effectiveness of Amendment No. 20 to the UTP Plan). The Exchange's predecessor, the American Stock Exchange LLC, joined the UTP Plan in 2001. *See* Securities Exchange Act Release No. 55647 (April 19, 2007), 72 FR 20891 (April 26, 2007) (S7–24–89). In March 2009, the Exchange changed its name to NYSE Amex LLC. *See* Securities Exchange Act Release No. 59575 (March 13, 2009), 74 FR 11803 (March 19, 2009) (SR–NYSEALTR–2009–24).

[5] 15 U.S.C. 78l.

[6] "Nasdaq Securities" is included within the definition of "security" as that term is used in the NYSE Amex Equities Rules. *See* NYSE Amex Equities Rule 3. In accordance with this definition, Nasdaq Securities are admitted to dealings on the Exchange on an "issued," "when issued," or "when distributed" basis. *See* NYSE Amex Equities Rule 501.

[7] 17 CFR 242.611. A protected bid or protected offer means a quotation in an NMS stock that: (i) Is displayed by an automated trading center; (ii) is disseminated pursuant to an effective national market system plan; and (iii) is an automated quotation that is the best bid or best offer of a national securities exchange, the best bid or best offer of The Nasdaq Stock Market, Inc., or the best bid or best offer of a national securities association other than the best bid or best offer of The Nasdaq Stock Market, Inc. 17 CFR 242.600(b)(57).

[8] *See* Rule 80C—NYSE Amex Equities (Trading Pauses in Individual Securities Due to Extraordinary Market Volatility).

[9] *See* Rule 128—NYSE Amex Equities (Clearly Erroneous Executions For NYSE Amex Equities).

potentially harmful market-wide implications.

This is not a concern with respect to trading Exchange-Listed Securities because of the operation of Liquidity Replenishment Points ("LRPs").[10] LRPs are pre-determined price points that temporarily convert the automatic Exchange market to an auction market when it is experiencing a large price movement based on a security's typical trading characteristics or market conditions over short periods of time during the trading day. LRPs work to dampen volatility and allow the Designated Market Maker ("DMM") assigned to such security to solicit additional liquidity. However, LRPs are not applicable to trading in Nasdaq Securities, and are therefore unavailable as a means to impede or prevent these multiple rapid executions at increasingly inferior prices. The Exchange believes that the elimination proposed herein is an appropriate measure to reduce the potential for erroneous executions and individual stock volatility trading pauses in Nasdaq Securities until such time as other volatility curbs are in place.

The Exchange believes that the elimination of Market and Stop Orders in Nasdaq Securities would not hinder the ability of members and member organizations to seek execution of their orders. On average, only 113 Market Orders and 27 Stop Orders in Nasdaq Securities are submitted to the Exchange each trading day, accounting for less than 0.0060% and 0.0014%, respectively, of the Exchange's 1,971,439 average daily orders in Nasdaq Securities. Upon implementation of the proposed rule change, members and member organizations could continue to utilize several other existing order types, under Rule 13—NYSE Amex Equities, for execution of their orders. The Exchange believes that, despite the relative infrequency in which they are submitted, the potentially harmful regulatory effects created by Market Orders (and Stop Orders that become Market Orders) in Nasdaq Securities requires that they be eliminated on the Exchange.

Accordingly, the Exchange proposes to eliminate the ability to enter Market and Stop Orders. As proposed, an order in a Nasdaq Security would be systematically rejected if submitted as a Market or Stop Order. A member or member organization whose Market or Stop Order is rejected would be required to re-submit the order to the Exchange, if it all, as one of several permissible order types provided under Rule 13—NYSE Amex Equities.

Rule 501(e)(1)(B)—Stop Order

The proposed inclusion of Stop Orders within Rule 501(e)(2)—NYSE Amex Equities would require that Rule 501(e)(1)(B)—NYSE Amex Equities be deleted. Rule 501(e)—NYSE Amex Equities modifies the meaning of certain order types, including Stop Orders, as these terms are defined under Rule 13—NYSE Amex Equities. Because the Exchange proposes to no longer accept Stop Orders for trading in Nasdaq Securities, a modified definition thereof is no longer necessary or appropriate. The Exchange therefore proposes to delete Rule 501(e)(1)(B)—NYSE Amex Equities in its entirety.

The Exchange will implement the system changes to no longer accept Stop and Market Orders on or about December 6, 2010, but in no event, any later than December 13, 2010, and will notify market participants in advance when the change will be implemented.

2. Statutory Basis

The Exchange believes that its proposal is consistent with Section 6(b) of the Act,[11] in general, and furthers the objectives of Section 6(b)(5) of the Act,[12] in particular, in that it is designed to prevent fraudulent and manipulative acts and practices, to promote just and equitable principles of trade, to remove impediments to and perfect the mechanism of a free and open market and a national market system, and, in general, to protect investors and the public interest. Specifically, the changes proposed herein would contribute to improving the quality of executions in Nasdaq Securities on the Exchange and avoiding executions of Nasdaq Securities at inferior prices.

B. Self-Regulatory Organization's Statement on Burden on Competition

The Exchange does not believe that the proposed rule change will impose any burden on competition that is not necessary or appropriate in furtherance of the purposes of the Act.

C. Self-Regulatory Organization's Statement on Comments on the Proposed Rule Change Received From Members, Participants, or Others

No written comments were solicited or received with respect to the proposed rule change.

III. Date of Effectiveness of the Proposed Rule Change and Timing for Commission Action

Because the foregoing rule does not (i) significantly affect the protection of investors or the public interest; (ii) impose any significant burden on competition; and (iii) become operative for 30 days from the date on which it was filed, or such shorter time as the Commission may designate if consistent with the protection of investors and the public interest, the proposed rule change has become effective pursuant to Section 19(b)(3)(A) of the Act[13] and Rule 19b–4(f)(6) thereunder.[14]

The Exchange has requested that the Commission waive the 30-day operative delay so that the Exchange can eliminate market and stop orders in Nasdaq-listed securities traded on the Exchange immediately. The Exchange has represented that the elimination of market and stop orders in Nasdaq-listed securities should lessen the potential for multiple rapid executions on the Exchange at inferior prices as a result of the lack of depth in liquidity for Nasdaq-listed securities on the Exchange, and should therefore reduce the potential for erroneous executions and individual stock volatility trading pauses in Nasdaq-listed securities. In light of the benefits afforded by this reduced potential, the Commission believes that waiving the 30-day operative delay is consistent with the protection of investors and the public interest.[15]

At any time within 60 days of the filing of such proposed rule change, the Commission summarily may temporarily suspend such rule change if it appears to the Commission that such action is necessary or appropriate in the public interest, for the protection of investors, or otherwise in furtherance of the purposes of the Act.

IV. Solicitation of Comments

Interested persons are invited to submit written data, views, and arguments concerning the foregoing, including whether the proposed rule change is consistent with the Act.

[10] *See* Rule 1000(a)(iv)—NYSE Amex Equities.

[11] 15 U.S.C. 78f(b).

[12] 15 U.S.C. 78f(b)(5).

[13] 15 U.S.C. 78s(b)(3)(A).

[14] 17 CFR 240.19b–4(f)(6). In addition, Rule 19b–4(f)(6)(iii) requires that a self-regulatory organization submit to the Commission written notice of its intent to file the proposed rule change, along with a brief description and text of the proposed rule change, at least five business days prior to the filing of the proposed rule change, or such shorter time as designated by the Commission. The Exchange has satisfied this requirement.

[15] For purposes only of waiving the 30-day operative delay, the Commission has also considered the proposed rule's impact on efficiency, competition, and capital formation. *See* 15 U.S.C. 78c(f).

Comments may be submitted by any of the following methods:

Electronic Comments

- Use the Commission's Internet comment form (*http://www.sec.gov/rules/sro.shtml*); or
- Send an e-mail to *rule-comments@sec.gov.* Please include File Number SR–NYSEAmex–2010–108 on the subject line.

Paper Comments

- Send paper comments in triplicate to Elizabeth M. Murphy, Secretary, Securities and Exchange Commission, 100 F Street, NE., Washington, DC 20549–1090.

All submissions should refer to File Number SR–NYSEAmex–2010–108. This file number should be included on the subject line if e-mail is used. To help the Commission process and review your comments more efficiently, please use only one method. The Commission will post all comments on the Commission's Internet Web site (*http://www.sec.gov/rules/sro.shtml*). Copies of the submission, all subsequent amendments, all written statements with respect to the proposed rule change that are filed with the Commission, and all written communications relating to the proposed rule change between the Commission and any person, other than those that may be withheld from the public in accordance with the provisions of 5 U.S.C. 552, will be available for Web site viewing and printing in the Commission's Public Reference Room, 100 F Street, NE., Washington, DC 20549, on official business days between the hours of 10 a.m. and 3 p.m. Copies of the filing also will be available for inspection and copying at the principal office of the Exchange. All comments received will be posted without change; the Commission does not edit personal identifying information from submissions. You should submit only information that you wish to make available publicly. All submissions should refer to File Number SR–NYSEAmex–2010–108 and should be submitted on or before December 30, 2010.

For the Commission, by the Division of Trading and Markets, pursuant to delegated authority.[16]

Florence E. Harmon,

Deputy Secretary.

[FR Doc. 2010–30883 Filed 12–8–10; 8:45 am]

BILLING CODE 8011–01–P

[16] 17 CFR 200.30–3(a)(12).

SECURITIES AND EXCHANGE COMMISSION

[Release No. 34–63425; File No. SR–NASDAQ–2010–156]

Self-Regulatory Organizations; The NASDAQ Stock Market LLC; Notice of Filing and Immediate Effectiveness of Proposed Rule Change To Amend NASDAQ Rules 2270 and 2910 To Reflect Changes to Corresponding FINRA Rule

December 3, 2010.

Pursuant to Section 19(b)(1) of the Securities Exchange Act of 1934 ("Act"),[1] and Rule 19b–4 thereunder,[2] notice is hereby given that on December 1, The NASDAQ Stock Market LLC (the "Exchange" or "NASDAQ") filed with the Securities and Exchange Commission ("Commission") the proposed rule change as described in Items I, II, and III below, which Items have been prepared by the Exchange. The Exchange has designated the proposed rule change as constituting a non-controversial rule change under Rule 19b–4(f)(6) under the Act,[3] which renders the proposal effective upon filing with the Commission. The Commission is publishing this notice to solicit comments on the proposed rule change from interested persons.

I. Self-Regulatory Organization's Statement of the Terms of Substance of the Proposed Rule Change

The Exchange is filing this proposed rule change to amend NASDAQ Rules 2270 and 2910 to reflect recent changes to a corresponding rule of the Financial Industry Regulatory Authority ("FINRA"). NASDAQ proposes to implement the proposed rule change immediately. [sic] The text of the proposed rule change is available at *http://nasdaqomx.cchwallstreet.com*, at the Exchange's principal office, and at the Commission's Public Reference Room.

II. Self-Regulatory Organization's Statement of the Purpose of, and Statutory Basis for, the Proposed Rule Change

In its filing with the Commission, the Exchange included statements concerning the purpose of and basis for the proposed rule change and discussed any comments it received on the proposed rule change. The text of these statements may be examined at the places specified in Item IV below. The Exchange has prepared summaries, set forth in Sections A, B, and C below, of the most significant aspects of such statements.

A. Self-Regulatory Organization's Statement of the Purpose of, and Statutory Basis for, the Proposed Rule Change

1. Purpose

Many of NASDAQ's rules are based on rules of FINRA (formerly the National Association of Securities Dealers ("NASD")). During 2008, FINRA embarked on an extended process of moving rules formerly designated as "NASD Rules" into a consolidated FINRA rulebook. In most cases, FINRA has renumbered these rules, and in some cases has substantively amended them. Accordingly, NASDAQ initiated a process of modifying its rulebook to ensure that NASDAQ rules corresponding to FINRA/NASD rules continue to mirror them as closely as practicable. NASDAQ proposes to update its rules to reflect changes [sic] NASDAQ Rules 2270 and 2910 which corresponds to FINRA Rule 2261.

NASDAQ Rule 2270 (Disclosure of Financial Condition to Customers) and NASDAQ Rule 2910 (Disclosure of Financial Condition to Other Members) formerly corresponded to NASD Rule 2270 (Disclosure of Financial Condition to Customers) and NASD Rule 2910 (Disclosure of Financial Condition to Other Members). In SR–FINRA–2009–081,[4] FINRA re-designated NASD Rules 2270 and 2910 as FINRA Rule 2261 and made substantive amendments to strengthen and simplify the rules.

More specifically, the current NASDAQ Rule 2270, which incorporates NASD Rule 2270 by reference, requires that the members make information relative to a member's financial condition, as disclosed in its most recent balance sheet, available for inspection by any bona fide regular customer upon request. In FINRA SR–2009–081, [sic] FINRA provided members the option of delivering their balance sheet, in paper or electronic form, to customers who request it. Additionally, if the delivery is electronic, the requesting customer must provide consent to receive the balance sheet in electronic form to ensure that such information is accessible to the customer.

This proposed filing also addresses NASDAQ Rule 2910, which compares to the former NASD Rule 2910. NASDAQ Rule 2910 requires that any member that is a party to an open transaction or who

[1] 15 U.S.C. 78s(b)(1).

[2] 17 CFR 240.19b–4.

[3] 17 CFR 240.19b–4(f)(6).

[4] Securities Exchange Act Release No. 61540 (February 18, 2010), 75 FR 8771 (February 25, 2010) (SR–FINRA–2008–081).

has on deposit cash or securities of another member to furnish, upon the written request of the other member, a statement of its financial condition as disclosed in its most recently prepared balance sheet. In SR–FINRA–2009–081, FINRA amended NASD Rule 2910 and consolidated it within FINRA Rule 2261 to require that members provide to other members the balance sheet that was prepared in accordance with the member's usual practice or as required by state or federal securities laws or any corresponding rule or regulation. Also, FINRA amended the provision to require that members be permitted to provide their balance sheet to other members in paper or electronic form; however, this does not require obtaining consent of the other members for delivery.

NASDAQ believes that NASDAQ Rule 2270 and 2910 should be consolidated and amended to reflect the provisions in the new FINRA 2261. For clarification, this results in deleting NASDAQ Rules 2270 and 2910. This will allow customers and other members to continue to have access to a copy of the member's most recent balance sheet at any time upon request while simplifying the provisions. NASDAQ is adopting the new FINRA rule in full by incorporating by reference FINRA Rule 2261 into the proposed NASDAQ Rule 2261.

2. Statutory Basis

The Exchange believes that the proposed rule change is consistent with the provisions of Section 6 of the Act,[5] in general, and with Sections 6(b)(5) of the Act,[6] in particular, in that the proposal is designed to prevent fraudulent and manipulative acts and practices, to promote just and equitable principles of trade, to foster cooperation and coordination with persons engaged in regulating, clearing, settling, processing information with respect to, and facilitating transactions in securities, to remove impediments to and perfect the mechanism of a free and open market and a national market system, and, in general, to protect investors and the public interest. The proposed changes will conform NASDAQ Rules 2270 and 2910 to recent changes made to corresponding FINRA Rule 2261 to promote application of consistent regulatory standards.

B. Self-Regulatory Organization's Statement on Burden on Competition

The Exchange does not believe that the proposed rule change will result in any burden on competition that is not necessary or appropriate in furtherance of the purposes of the Act, as amended.

C. Self-Regulatory Organization's Statement on Comments on the Proposed Rule Change Received From Members, Participants, or Others

Written comments were neither solicited nor received.

III. Date of Effectiveness of the Proposed Rule Change and Timing for Commission Action

Because the foregoing proposed rule change does not: (i) Significantly affect the protection of investors or the public interest; (ii) impose any significant burden on competition; and (iii) become operative for 30 days from the date on which it was filed, or such shorter time as the Commission may designate, it has become effective pursuant to Section 19(b)(3)(A) of the Act[7] and Rule 19b–4(f)(6) thereunder.[8]

At any time within 60 days of the filing of the proposed rule change, the Commission summarily may temporarily suspend such rule change if it appears to the Commission that such action is necessary or appropriate in the public interest, for the protection of investors, or otherwise in furtherance of the purposes of the Act. If the Commission takes such action, the Commission shall institute proceedings to determine whether the proposed rule should be approved or disapproved.

IV. Solicitation of Comments

Interested persons are invited to submit written data, views, and arguments concerning the foregoing, including whether the proposed rule change is consistent with the Act. Comments may be submitted by any of the following methods:

Electronic Comments

- Use the Commission's Internet comment form (*http://www.sec.gov/rules/sro.shtml);* or
- Send an e-mail to *rule-comments@sec.gov.* Please include File Number SR–NASDAQ–2010–156 on the subject line.

Paper Comments

- Send paper comments in triplicate to Elizabeth M. Murphy, Secretary, Securities and Exchange Commission, 100 F Street, NE., Washington, DC 20549–1090.

All submissions should refer to File Number SR–NASDAQ–2010–156. This file number should be included on the subject line if e-mail is used. To help the Commission process and review your comments more efficiently, please use only one method. The Commission will post all comments on the Commission's Internet Web site (*http://www.sec.gov/rules/sro.shtml).*

Copies of the submission, all subsequent amendments, all written statements with respect to the proposed rule change that are filed with the Commission, and all written communications relating to the proposed rule change between the Commission and any person, other than those that may be withheld from the public in accordance with the provisions of 5 U.S.C. 552, will be available for Web site viewing and printing in the Commission's Public Reference Room. Copies of the filing also will be available for inspection and copying at the principal office of the Exchange. All comments received will be posted without change; the Commission does not edit personal identifying information from submissions. You should submit only information that you wish to make available publicly. All submissions should refer to File Number SR–NASDAQ–2010–156 and should be submitted on or before December 30, 2010.

For the Commission, by the Division of Trading and Markets, pursuant to delegated authority.[9]

Florence E. Harmon,

Deputy Secretary.

[FR Doc. 2010–30942 Filed 12–8–10; 8:45 am]

BILLING CODE 8011–01–P

[5] 15 U.S.C. 78f.

[6] 15 U.S.C. 78f(b)(5).

[7] 15 U.S.C. 78s(b)(3)(A).

[8] 17 CFR 240.19b–4(f)(6).

[9] 17 CFR 200.30–3(a)(12).

SECURITIES AND EXCHANGE COMMISSION

[Release No. 34–63428; File No. SR–EDGX–2010–18]

Self-Regulatory Organizations; EDGX Exchange, Inc.; Notice of Filing and Immediate Effectiveness of Proposed Rule Change To Amend EDGX Rule 11.9 To Offer Anti-Internalization Qualifier ("AIQ") Functionality to Exchange Users

December 3, 2010.

Pursuant to Section 19(b)(1) of the Securities Exchange Act of 1934 (the "Act"),[1] and Rule 19b–4 thereunder,[2] notice is hereby given that on November 30, 2010, EDGX Exchange, Inc. (the "Exchange" or the "EDGX") filed with the Securities and Exchange

[1] 15 U.S.C. 78s(b)(1).

[2] 17 CFR 240.19b–4.

Commission (the "Commission") the proposed rule change as described in Items I and II below, which Items have been prepared by the Exchange. The Exchange has designated the proposed rule change as constituting a "non-controversial" rule change under paragraph (f)(6) of Rule 19b–4 under the Act.[3] The Commission is publishing this notice to solicit comments on the proposed rule change from interested persons.

I. Self-Regulatory Organization's Statement of the Terms of Substance of the Proposed Rule Change

The Exchange proposes to offer Anti-Internalization Qualifier ("AIQ") functionality to Exchange Users pursuant to proposed Rule 11.9(f). The text of the proposed rule change is available on the Exchange's Web site at *http://www.directedge.com,* at the Exchange's principal office, at the Public Reference Room of the Commission, and the Commission's Web site.[4]

II. Self-Regulatory Organization's Statement of the Purpose of, and Statutory Basis for, the Proposed Rule Change

In its filing with the Commission, the Exchange included statements concerning the purpose of, and basis for, the proposed rule change and discussed any comments it received on the proposed rule change. The text of these statements may be examined at the places specified in Item IV below. The self-regulatory organization has prepared summaries, set forth in Sections A, B and C below, of the most significant aspects of such statements.

A. Self-Regulatory Organization's Statement of the Purpose of, and the Statutory Basis for, the Proposed Rule Change

1. Purpose

The Exchange proposes to offer Anti-Internalization Qualifier ("AIQ") functionality to Exchange Users pursuant to proposed Rule 11.9(f).

Background

The proposed AIQ modifiers are designed to prevent two orders with the same Unique Identifier (as defined below) from executing against each other. The Exchange proposes to offer five AIQ modifiers that will be implemented and can be set at the market participant identifier ("MPID"), the Exchange Member identifier or the Anti-Internalization Group identifier level[5] (any such identifier, a "Unique Identifier").[6] With one exception, described below, the AIQ modifier on the incoming order controls the interaction between two orders marked with AIQ modifiers from the same Unique Identifier. The five AIQ modifiers are discussed more thoroughly below.

AIQ Cancel Newest ("CN")

An incoming order marked with the CN modifier will not execute against opposite side resting interest marked with any AIQ modifier originating from the same Unique Identifier. The incoming order marked with the CN modifier will be cancelled back to the originating User. The resting order marked with an AIQ modifier, which otherwise would have interacted with the incoming order from the same Unique Identifier, will remain on the EDGX book ("Book").

AIQ Cancel Oldest ("CO")

An incoming order marked with the CO modifier will not execute against opposite side resting interest marked with any AIQ modifier originating from the same Unique Identifier. The resting order marked with the AIQ modifier, which otherwise would have interacted with the incoming order by the same Unique Identifier, will be cancelled back to the originating User. The incoming order marked with the CO modifier will remain on the Book.

AIQ Decrement and Cancel ("DC")

An incoming order marked with the DC modifier will not execute against opposite side resting interest marked with any AIQ modifier originating from the same Unique Identifier. If both orders are equivalent in size, both orders will be cancelled back to the originating User. If the orders are not equivalent in size, the smaller order will be cancelled back to the originating User and the larger order will be decremented by the size of the smaller order, with the balance remaining on the Book.

AIQ Cancel Both ("CB")

An incoming order marked with the CB modifier will not execute against opposite side resting interest marked with any AIQ modifier originating from the same Unique Identifier. The entire size of both orders will be cancelled back to the originating User.

AIQ Cancel Smallest ("CS")

An incoming order marked with the CS modifier will not execute against opposite side resting interest marked with any AIQ modifier originating from the same Unique Identifier. If both orders are equivalent in size, both orders will be cancelled back to the originating User. If the orders are not equivalent in size, the smaller of the two orders will be cancelled back to the originating User and the larger order will remain on the Book.

Additional Discussion

AIQ modifiers are intended to prevent interaction between the same Unique Identifier. AIQ modifiers must be present on both the buy and the sell order in order to prevent a trade from occurring and to effect a cancel instruction. AIQ modifiers are available for orders entered in either an agency or principal capacity. An incoming AIQ order cannot cancel through resting orders that have price and/or time priority. When an order with an AIQ modifier is entered it will first interact with all available interest in accordance with the execution process described in Exchange Rules 11.8 and 11.9. If there is a remaining balance on the order after trading with all orders with higher priority, it may then interact with an opposite side AIQ order in accordance with the rules established above. Incoming AIQ orders that are priced through the price of a resting AIQ order may cancel the resting order as long as no other non-AIQ orders have priority.

The Exchange believes that adding this functionality will allow Exchange Users to better manage order flow and prevent undesirable executions with themselves or the potential for (or the appearance of) "wash sales" that may occur as a result of the velocity of trading in today's high speed marketplace. Many Exchange Users have multiple connections into the Exchange due to capacity and speed related demands. Orders routed by the same User via different connections may, in certain circumstances, trade against each other. The new AIQ modifiers provide Users the opportunity to prevent these potentially undesirable trades occurring under the same Unique Identifier on both the buy and sell side of the execution. The Exchange also believes that this functionality will allow firms to better internalize agency order flow which in turn may decrease the costs to its customers. The Exchange notes that the AIQ modifiers do not alleviate, or otherwise exempt, broker-dealers from their best execution obligations. As such, broker-dealers

[3] 17 CFR 240.19b–4(f)(6).

[4] *http://www.sec.gov.*

[5] The Anti-Internalization Group identifier is a unique two character ID that an Exchange Member selects.

[6] Any Exchange Member that has an MPID issued by FINRA is identified in the Exchange's internal systems by that MPID.

using the AIQ modifiers will be obligated to internally cross agency orders at the same price, or a better price than they would have received had the orders been executed on the Exchange. Additionally, the AIQ modifiers will assist market participants in complying with certain rules and regulations of the Employee Retirement Income Security Act ("ERISA") that preclude and/or limit managing broker-dealers of such accounts from trading as principal with orders generated for those accounts. Finally, the Exchange notes that offering the AIQ modifiers will streamline certain regulatory functions by reducing false positive results that may occur on Exchange generated wash trading surveillance reports when orders are executed under the same Unique Identifier. For these reasons, the Exchange believes the AIQ modifiers offer users enhanced order processing functionality that may prevent potentially undesirable executions without negatively impacting broker-dealer best execution obligations.

2. Statutory Basis

The rule change proposed in this submission is consistent with the requirements of the Securities Exchange Act of 1934 (the "Act"), and the rules and regulations thereunder that are applicable to a national securities exchange, and, in particular, with the requirements of Section 6(b) [7] of the Act. Specifically, the proposed change is consistent with Section 6(b)(5) [8] of the Act, because it is designed to prevent fraudulent and manipulative acts and practices, to promote just and equitable principles of trade, to foster cooperation and coordination with persons engaged in facilitating transactions in securities, and to remove impediments to, and perfect the mechanism of, a free and open market and a national market system. Specifically, the AIQ functionality allows firms to better manage order flow and prevent undesirable executions against themselves, and the proposed change described herein enhances the choices available to such firms in how they do so.

B. Self-Regulatory Organization's Statement on Burden on Competition

The proposed rule change does not impose any burden on competition that is not necessary or appropriate in furtherance of the purposes of the Act.

[7] 15 U.S.C. 78f(b).

[8] 15 U.S.C. 78f(b)(5).

C. Self-Regulatory Organization's Statement on Comments on the Proposed Rule Change Received From Members, Participants, or Others

The Exchange has not solicited, and does not intend to solicit, comments on this proposed rule change. The Exchange has not received any unsolicited written comments from members or other interested parties.

III. Date of Effectiveness of the Proposed Rule Change and Timing for Commission Action

Because the foregoing proposed rule change does not significantly affect the protection of investors or the public interest, does not impose any significant burden on competition, and, by its terms, does not become operative for 30 days from the date on which it was filed, or such shorter time as the Commission may designate, it has become effective pursuant to Section 19(b)(3)(A) of the Act [9] and Rule 19b–4(f)(6) thereunder.[10]

The Exchange has requested that the Commission waive the 30-day pre-operative delay so that the Exchange may immediately offer Exchange users the ability to better manage order flow and prevent undesirable executions with themselves or the potential for or the appearance of wash sales that may occur as a result of the velocity of trading in today's high speed marketplace. The Commission notes that the proposal is based on similar rules of other exchanges [11] and believes that waiver of the operative delay is consistent with the protection of investors and the public interest. Therefore, the Commission designates the proposal operative upon filing.[12]

At any time within 60 days of the filing of the proposed rule change, the Commission summarily may temporarily suspend such rule change if it appears to the Commission that such action is necessary or appropriate in the public interest, for the protection of investors, or otherwise in furtherance of the purposes of the Act.

[9] 15 U.S.C. 78s(b)(3)(A).

[10] 17 CFR 240.19b–4(f)(6). In addition, Rule 19b–4(f)(6)(iii) requires the self-regulatory organization to submit to the Commission written notice of its intent to file the proposed rule change, along with a brief description and text of the proposed rule change, at least five business days prior to the date of filing of the proposed rule change, or such shorter time as designated by the Commission. The Exchange has satisfied this requirement.

[11] *See* Securities Exchange Act Release No. 60182 (June 26, 2009), 74 FR 32014 (July 6, 2009) (SR–NASDAQ–2009–057); Securities Exchange Act Release No. 60191 (June 30, 2009) (SR–NYSEArca–2009–058); Securities Exchange Act Release No. 60266 (July 9, 2009), 74 FR 34380 (July 15, 2009) (SR–BATS–2009–022); Securities Exchange Act Release No. 62102 (May 13, 2010), 75 FR 28670 (May 21, 2010) (SR–BATS–2010–011).

[12] For purposes only of waiving the 30-day operative delay, the Commission has considered the proposed rule's impact on efficiency, competition, and capital formation. *See* 15 U.S.C. 78c(f).

IV. Solicitation of Comments

Interested persons are invited to submit written data, views, and arguments concerning the foregoing, including whether the proposed rule change is consistent with the Act. Comments may be submitted by any of the following methods:

Electronic Comments

- Use the Commission's Internet comment form (*http://www.sec.gov/rules/sro.shtml* or
- Send an e-mail to *rule-comments@sec.gov.* Please include File Number SR–EDGX–2010–18 on the subject line.

Paper Comments

- Send paper comments in triplicate to Elizabeth M. Murphy, Secretary, Securities and Exchange Commission, 100 F Street, NE., Washington, DC 20549–1090.

All submissions should refer to File Number SR–EDGX–2010–18. This file number should be included on the subject line if e-mail is used. To help the Commission process and review your comments more efficiently, please use only one method. The Commission will post all comments on the Commission's Internet Web site (*http://www.sec.gov/rules/sro.shtml*). Copies of the submission, all subsequent amendments, all written statements with respect to the proposed rule change that are filed with the Commission, and all written communications relating to the proposed rule change between the Commission and any person, other than those that may be withheld from the public in accordance with the provisions of 5 U.S.C. 552, will be available for Web site viewing and printing in the Commission's Public Reference Room, 100 F Street, NE., Washington, DC 20549, on official business days between the hours of 10 a.m. and 3 p.m. Copies of the filing also will be available for inspection and copying at the principal office of the Exchange. All comments received will be posted without change; the Commission does not edit personal identifying information from submissions. You should submit only information that you wish to make available publicly. All submissions should refer to File Number SR–EDGX–2010–18 and should be submitted on or before December 30, 2010.

For the Commission, by the Division of Trading and Markets, pursuant to delegated authority.[13]

Florence E. Harmon,

Deputy Secretary.

[FR Doc. 2010–30944 Filed 12–8–10; 8:45 am]

BILLING CODE 8011–01–P

SECURITIES AND EXCHANGE COMMISSION

[Release No. 34–63432; File No. SR–BX–2010–082]

Self-Regulatory Organizations; NASDAQ OMX BX, Inc.; Notice of Filing and Immediate Effectiveness of Proposed Rule Change To Modify Fees for the NASDAQ OMX BX Equities System

December 3, 2010.

Pursuant to Section 19(b)(1) of the Securities Exchange Act of 1934 ("Act"),[1] and Rule 19b–4 thereunder,[2] notice is hereby given that on November 24, 2010, NASDAQ OMX BX, Inc. ("BX") filed with the Securities and Exchange Commission ("Commission") the proposed rule change as described in Items I and II below, which Items have been prepared by BX. The Commission is publishing this notice to solicit comments on the proposed rule change from interested persons.

I. Self-Regulatory Organization's Statement of the Terms of Substance of the Proposed Rule Change

BX proposes to modify pricing for BX members using the NASDAQ OMX BX Equities System by clarifying that partial trading days will not be counted in the calculation of average daily trading volume for purposes of determining a member's eligibility for recently adopted pricing tiers in BX's fee schedule. BX will implement the proposed change immediatley [sic]. The text of the proposed rule change is available at *http://nasdaqomxbx.cchwallstreet.com*, at BX's principal office, and at the Commission's Public Reference Room.

II. Self-Regulatory Organization's Statement of the Purpose of, and Statutory Basis for, the Proposed Rule Change

In its filing with the Commission, BX included statements concerning the purpose of and basis for the proposed rule change and discussed any comments it received on the proposed rule change. The text of these statements may be examined at the places specified in Item IV below. BX has prepared summaries, set forth in Sections A, B, and C below, of the most significant aspects of such statements.

A. Self-Regulatory Organization's Statement of the Purpose of, and the Statutory Basis for, the Proposed Rule Change

1. Purpose

BX recently modified its fees for trades that execute at prices at or above $1.[3] Effective November 1, 2010, BX introduced a tiered pricing structure for the fee that it charges to orders that add liquidity, under which members adding a daily average of more than 50 million shares of liquidity during a month are charged $0.00025 per share executed, while members adding a daily average of 50 million or fewer shares during the month are charged $0.0004 per share executed.

Through this proposed rule change, BX is adding language to BX Rule 7018 to clarify that any day that the market is not open for the entire trading day will be excluded from the calculation of a member's average daily volume. The change recognizes that many members may have extremely light trading volumes on days such as the day after Thanksgiving, when the markets are not open for an entire trading day. Accordingly, excluding this day from average daily volume calculations provides a more accurate assessment of the member's volume during the month. There have been no partial trading days during the month of November prior to the date of submission of this filing, so the filing is not retroactive in effect.

2. Statutory Basis

BX believes that the proposed rule change is consistent with the provisions of Section 6 of the Act,[4] in general, and with Section 6(b)(4) of the Act,[5] in particular, in that it provides for the equitable allocation of reasonable dues, fees and other charges among members and issuers and other persons using any facility or system which BX operates or controls. The change will clarify the application of a recent pricing change by excluding partial trading days from average daily volume calculations, making it easier for members to achieve more favorable pricing tiers by excluding trading days when their volume is likely to be lower.

B. Self-Regulatory Organization's Statement on Burden on Competition

BX does not believe that the proposed rule change will result in any burden on competition that is not necessary or appropriate in furtherance of the purposes of the Act, as amended.

C. Self-Regulatory Organization's Statement on Comments on the Proposed Rule Change Received From Members, Participants, or Others

Written comments were neither solicited nor received.

III. Date of Effectiveness of the Proposed Rule Change and Timing for Commission Action

The foregoing rule change is effective upon filing pursuant to Section 19(b)(3)(A)[6] of the Act and subparagraph (f)(2) of Rule 19b–4[7] thereunder, because it establishes a due, fee, or other charge imposed by BX on its members.

At any time within 60 days of the filing of the proposed rule change, the Commission summarily may temporarily suspend such rule change if it appears to the Commission that such action is necessary or appropriate in the public interest, for the protection of investors, or otherwise in furtherance of the purposes of the Act.

IV. Solicitation of Comments

Interested persons are invited to submit written data, views, and arguments concerning the foregoing, including whether the proposed rule change is consistent with the Act. Comments may be submitted by any of the following methods:

Electronic Comments

- Use the Commission's Internet comment form (*http://www.sec.gov/rules/sro.shtml*); or
- Send an e-mail to *rule-comments@sec.gov*. Please include File Number SR–BX–2010–082 on the subject line.

Paper Comments

- Send paper comments in triplicate to Elizabeth M. Murphy, Secretary, Securities and Exchange Commission, 100 F Street, NE., Washington, DC 20549–1090.

All submissions should refer to File Number SR–BX–2010–082. This file number should be included on the subject line if e-mail is used. To help the Commission process and review your comments more efficiently, please use only one method. The Commission will

[13] 17 CFR 200.30–3(a)(12).

[1] 15 U.S.C. 78s(b)(1).

[2] 17 CFR 240.19b–4.

[3] Securities Exchange Act Release No. 63285 (November 9, 2010), 75 FR 70310 (November 17, 2010) (SR–BX–2010–074).

[4] 15 U.S.C. 78f.

[5] 15 U.S.C. 78f(b)(4).

[6] 15 U.S.C. 78s(b)(3)(A).

[7] 17 CFR 240.19b–4(f)(2).

post all comments on the Commission's Internet Web site (*http://www.sec.gov/rules/sro.shtml*). Copies of the submission, all subsequent amendments, all written statements with respect to the proposed rule change that are filed with the Commission, and all written communications relating to the proposed rule change between the Commission and any person, other than those that may be withheld from the public in accordance with the provisions of 5 U.S.C. 552, will be available for Web site viewing and printing in the Commission's Public Reference Room, 100 F Street, NE., Washington, DC 20549, on official business days between the hours of 10 a.m. and 3 p.m. Copies of the filing also will be available for inspection and copying at the principal office of the Exchange.[8] All comments received will be posted without change; the Commission does not edit personal identifying information from submissions. You should submit only information that you wish to make available publicly. All submissions should refer to File Number SR–BX–2010–082 and should be submitted on or before December 30, 2010.

For the Commission, by the Division of Trading and Markets, pursuant to delegated authority.[9]

Florence E. Harmon,

Deputy Secretary.

[FR Doc. 2010–30965 Filed 12–8–10; 8:45 am]

BILLING CODE 8011–01–P

[8] The text of the proposed rule change is available on the Commission's Web site at *http://www.sec.gov*.

[9] 17 CFR 200.30–3(a)(12).

SECURITIES AND EXCHANGE COMMISSION

[Release No. 34–63426; File No. SR–CBOE–2010–107]

Self-Regulatory Organizations; Chicago Board Options Exchange, Incorporated: Notice of Filing and Immediate Effectiveness of Proposed Rule Change Relating to Amendment of the Hybrid Agency Liaison Step-Up Rebate

December 3, 2010.

Pursuant to Section 19(b)(1) of the Securities Exchange Act of 1934, 15 U.S.C. 78s(b)(1), notice is hereby given that on December 1, 2010, Chicago Board Options Exchange, Incorporated ("CBOE" or the "Exchange") filed with the Securities and Exchange Commission ("Commission") the proposed rule change as described in Items I and II below, which Items have been prepared by CBOE. The Commission is publishing this notice to solicit comments on the proposed rule change from interested persons.

I. Self-Regulatory Organization's Statement of the Terms of Substance of the Proposed Rule Change

Chicago Board Options Exchange, Incorporated ("CBOE" or "Exchange") proposes to amend the Hybrid Agency Liaison ("HAL") step-up rebate. The text of the proposed rule change is available on the Exchange's Web site (*http://www.cboe.org/legal*), at the Exchange's Office of the Secretary and at the Commission.

II. Self-Regulatory Organization's Statement of the Purpose of, and Statutory Basis for, the Proposed Rule Change

In its filing with the Commission, CBOE included statements concerning the purpose of and basis for the proposed rule change and discussed any comments it received on the proposed rule change. The text of these statements may be examined at the places specified in Item IV below. CBOE has prepared summaries, set forth in sections (A), (B), and (C) below, of the most significant aspects of such statements.

A. Self-Regulatory Organization's Statement of the Purpose of, and Statutory Basis for, Proposed Rule Change

1. Purpose

In order to incent market makers to execute orders at CBOE versus routing orders to other exchanges pursuant to the Options Order Protection and Locked/Crossed Plan, the Exchange provides a rebate to market-makers that "step-up" and trade all or part of certain orders on the HAL system.[1] Specifically, the Exchange rebates to a market-maker $.20 per contract against transaction fees generated from a transaction on the HAL system in a penny pilot class, provided that at least 60% of the market-maker's quotes in that class (excluding quotes in LEAPS series) in the prior calendar month were on one side of the national best bid or offer ("NBBO") price. Market-makers not meeting this 60% qualifying threshold are not eligible to receive a rebate. The Exchange proposes to reduce the amount of the rebate from $.20 per contract to $.15 per contract effective December 1, 2010. All other aspects of the rebate program would remain unchanged.

2. Statutory Basis

The Exchange believes the proposed rule change is consistent with Section 6(b) of the Securities Exchange Act of 1934 ("Act"),[2] in general, and furthers the objectives of Section 6(b)(4)[3] of the Act in particular, in that it is designed to provide for the equitable allocation of reasonable dues, fees, and other charges among its trading permit holders. The Exchange believes the proposed rebate is reasonable because it provides an incentive for market-makers to compete better for order flow in the penny pilot classes. The Exchange believes the proposed rebate is equitable because it applies equally to all market makers that trade orders in penny pilot classes on the HAL system and that meet the qualifying quoting criteria.

B. Self-Regulatory Organization's Statement on Burden on Competition

CBOE does not believe that the proposed rule change will impose any burden on competition that is not necessary or appropriate in furtherance of purposes of the Act.

C. Self-Regulatory Organization's Statement on Comments on the Proposed Rule Change Received From Members, Participants or Others

No written comments were solicited or received with respect to the proposed rule change.

III. Date of Effectiveness of the Proposed Rule Change and Timing for Commission Action

The foregoing rule change has become effective pursuant to Section 19(b)(3)(A) of the Act[4] and subparagraph (f)(2) of Rule 19b–4[5] thereunder. At any time within 60 days of the filing of the proposed rule change, the Commission summarily may temporarily suspend such rule change if it appears to the Commission that such action is necessary or appropriate in the public interest, for the protection of investors, or otherwise in furtherance of the purposes of the Act.

IV. Solicitation of Comments

Interested persons are invited to submit written data, views, and arguments concerning the foregoing, including whether the proposed rule change is consistent with the Act.

[1] *See* CBOE Fees Schedule, Section 19. HAL is a system for automated handling of electronically received orders that are not automatically executed upon receipt by the Hybrid System. CBOE Rule 6.14A governs the operation of the HAL system under the Options Order Protection and Locked/Crossed Plan.

[2] 15 U.S.C. 78f(b).

[3] 15 U.S.C. 78f(b)(4).

[4] 15 U.S.C. 78s(b)(3)(A).

[5] 17 CFR 240.19b–4(f)(2).

Comments may be submitted by any of the following methods:

Electronic Comments

- Use the Commission's Internet comment form (*http://www.sec.gov/rules/sro.shtml);* or
- Send an e-mail to *rule-comments@sec.gov.* Please include File Number SR–CBOE–2010–107 on the subject line.

Paper Comments

- Send paper comments in triplicate to Elizabeth M. Murphy, Secretary, Securities and Exchange Commission, 100 F Street, NE., Washington, DC 20549.

All submissions should refer to File Number SR–CBOE–2010–107. This file number should be included on the subject line if e-mail is used. To help the Commission process and review your comments more efficiently, please use only one method. The Commission will post all comments on the Commission's Internet Web site (*http://www.sec.gov/rules/sro.shtml).* Copies of the submission, all subsequent amendments, all written statements with respect to the proposed rule change that are filed with the Commission, and all written communications relating to the proposed rule change between the Commission and any person, other than those that may be withheld from the public in accordance with the provisions of 5 U.S.C. 552, will be available for Web site viewing and printing in the Commission's Public Reference Room, 100 F Street, NE., Washington, DC 20549 on official business days between the hours of 10 a.m. and 3 p.m. Copies of such filing also will be available for inspection and copying at the principal office of CBOE. All comments received will be posted without change; the Commission does not edit personal identifying information from submissions. You should submit only information that you wish to make available publicly. All submissions should refer to File Number SR–CBOE–2010–107 and should be submitted on or before December 30, 2010.

For the Commission, by the Division of Trading and Markets, pursuant to delegated authority.[6]

Florence E. Harmon,

Deputy Secretary.

[FR Doc. 2010–30945 Filed 12–8–10; 8:45 am]

BILLING CODE 8011–01–P

[6] 17 CFR 200.30–3(a)(12).

SECURITIES AND EXCHANGE COMMISSION

[Release No. 34–63427; File No. SR–EDGA–2010–19]

Self-Regulatory Organizations; EDGA Exchange, Inc.; Notice of Filing and Immediate Effectiveness of Proposed Rule Change To Amend EDGA Rule 11.9 To Offer Anti-Internalization Qualifier ("AIQ") Functionality to Exchange Users

December 3, 2010.

Pursuant to Section 19(b)(1) of the Securities Exchange Act of 1934 (the "Act"),[1] and Rule 19b–4 thereunder,[2] notice is hereby given that on November 30, 2010, EDGA Exchange, Inc. (the "Exchange" or the "EDGA") filed with the Securities and Exchange Commission (the "Commission") the proposed rule change as described in Items I and II below, which Items have been prepared by the Exchange. The Exchange has designated the proposed rule change as constituting a "non-controversial" rule change under paragraph (f)(6) of Rule 19b–4 under the Act.[3] The Commission is publishing this notice to solicit comments on the proposed rule change from interested persons.

I. Self-Regulatory Organization's Statement of the Terms of Substance of the Proposed Rule Change

The Exchange proposes to offer Anti-Internalization Qualifier ("AIQ") functionality to Exchange Users pursuant to proposed Rule 11.9(f). The text of the proposed rule change is available on the Exchange's Web site at *http://www.directedge.com*, at the Exchange's principal office, at the Public Reference Room of the Commission, and the Commission's Web site.[4]

II. Self-Regulatory Organization's Statement of the Purpose of, and Statutory Basis for, the Proposed Rule Change

In its filing with the Commission, the Exchange included statements concerning the purpose of, and basis for, the proposed rule change and discussed any comments it received on the proposed rule change. The text of these statements may be examined at the places specified in Item IV below. The self-regulatory organization has prepared summaries, set forth in Sections A, B and C below, of the most significant aspects of such statements

A. Self-Regulatory Organization's Statement of the Purpose of, and the Statutory Basis for, the Proposed Rule Change

1. Purpose

The Exchange proposes to offer Anti-Internalization Qualifier ("AIQ") functionality to Exchange Users pursuant to proposed Rule 11.9(f).

Background

The proposed AIQ modifiers are designed to prevent two orders with the same Unique Identifier (as defined below) from executing against each other. The Exchange proposes to offer five AIQ modifiers that will be implemented and can be set at the market participant identifier ("MPID"), the Exchange Member identifier or the Anti-Internalization Group identifier level[5] (any such identifier, a "Unique Identifier").[6] With one exception, described below, the AIQ modifier on the incoming order controls the interaction between two orders marked with AIQ modifiers from the same Unique Identifier. The five AIQ modifiers are discussed more thoroughly below.

AIQ Cancel Newest ("CN")

An incoming order marked with the CN modifier will not execute against opposite side resting interest marked with any AIQ modifier originating from the same Unique Identifier. The incoming order marked with the CN modifier will be cancelled back to the originating User. The resting order marked with an AIQ modifier, which otherwise would have interacted with the incoming order from the same Unique Identifier, will remain on the EDGA book ("Book").

AIQ Cancel Oldest ("CO")

An incoming order marked with the CO modifier will not execute against opposite side resting interest marked with any AIQ modifier originating from the same Unique Identifier. The resting order marked with the AIQ modifier, which otherwise would have interacted with the incoming order by the same Unique Identifier, will be cancelled back to the originating User. The incoming order marked with the CO modifier will remain on the Book.

[1] 15 U.S.C. 78s(b)(1).

[2] 17 CFR 240.19b–4.

[3] 17 CFR 240.19b–4(f)(6).

[4] *http://www.sec.gov.*

[5] The Anti-Internalization Group identifier is a unique two character ID that an Exchange Member selects.

[6] Any Exchange Member that has an MPID issued by FINRA is identified in the Exchange's internal systems by that MPID.

AIQ Decrement and Cancel ("DC")

An incoming order marked with the DC modifier will not execute against opposite side resting interest marked with any AIQ modifier originating from the same Unique Identifier. If both orders are equivalent in size, both orders will be cancelled back to the originating User. If the orders are not equivalent in size, the smaller order will be cancelled back to the originating User and the larger order will be decremented by the size of the smaller order, with the balance remaining on the Book.

AIQ Cancel Both ("CB")

An incoming order marked with the CB modifier will not execute against opposite side resting interest marked with any AIQ modifier originating from the same Unique Identifier. The entire size of both orders will be cancelled back to the originating User.

AIQ Cancel Smallest ("CS")

An incoming order marked with the CS modifier will not execute against opposite side resting interest marked with any AIQ modifier originating from the same Unique Identifier. If both orders are equivalent in size, both orders will be cancelled back to the originating User. If the orders are not equivalent in size, the smaller of the two orders will be cancelled back to the originating User and the larger order will remain on the Book.

Additional Discussion

AIQ modifiers are intended to prevent interaction between the same Unique Identifier. AIQ modifiers must be present on both the buy and the sell order in order to prevent a trade from occurring and to effect a cancel instruction. AIQ modifiers are available for orders entered in either an agency or principal capacity. An incoming AIQ order cannot cancel through resting orders that have price and/or time priority. When an order with an AIQ modifier is entered it will first interact with all available interest in accordance with the execution process described in Exchange Rules 11.8 and 11.9. If there is a remaining balance on the order after trading with all orders with higher priority, it may then interact with an opposite side AIQ order in accordance with the rules established above. Incoming AIQ orders that are priced through the price of a resting AIQ order may cancel the resting order as long as no other non-AIQ orders have priority.

The Exchange believes that adding this functionality will allow Exchange Users to better manage order flow and prevent undesirable executions with themselves or the potential for (or the appearance of) "wash sales" that may occur as a result of the velocity of trading in today's high speed marketplace. Many Exchange Users have multiple connections into the Exchange due to capacity and speed related demands. Orders routed by the same User via different connections may, in certain circumstances, trade against each other. The new AIQ modifiers provide Users the opportunity to prevent these potentially undesirable trades occurring under the same Unique Identifier on both the buy and sell side of the execution. The Exchange also believes that this functionality will allow firms to better internalize agency order flow which in turn may decrease the costs to its customers. The Exchange notes that the AIQ modifiers do not alleviate, or otherwise exempt, broker-dealers from their best execution obligations. As such, broker-dealers using the AIQ modifiers will be obligated to internally cross agency orders at the same price, or a better price than they would have received had the orders been executed on the Exchange. Additionally, the AIQ modifiers will assist market participants in complying with certain rules and regulations of the Employee Retirement Income Security Act ("ERISA") that preclude and/or limit managing broker-dealers of such accounts from trading as principal with orders generated for those accounts. Finally, the Exchange notes that offering the AIQ modifiers will streamline certain regulatory functions by reducing false positive results that may occur on Exchange generated wash trading surveillance reports when orders are executed under the same Unique Identifier. For these reasons, the Exchange believes the AIQ modifiers offer users enhanced order processing functionality that may prevent potentially undesirable executions without negatively impacting broker-dealer best execution obligations.

2. Statutory Basis

The rule change proposed in this submission is consistent with the requirements of the Securities Exchange Act of 1934 (the "Act"), and the rules and regulations thereunder that are applicable to a national securities exchange, and, in particular, with the requirements of Section 6(b) [7] of the Act. Specifically, the proposed change is consistent with Section 6(b)(5) [8] of the Act, because it is designed to prevent fraudulent and manipulative acts and practices, to promote just and equitable principles of trade, to foster cooperation and coordination with persons engaged in facilitating transactions in securities, and to remove impediments to, and perfect the mechanism of, a free and open market and a national market system. Specifically, the AIQ functionality allows firms to better manage order flow and prevent undesirable executions against themselves, and the proposed change described herein enhances the choices available to such firms in how they do so.

B. Self-Regulatory Organization's Statement on Burden on Competition

The proposed rule change does not impose any burden on competition that is not necessary or appropriate in furtherance of the purposes of the Act.

C. Self-Regulatory Organization's Statement on Comments on the Proposed Rule Change Received From Members, Participants, or Others

The Exchange has not solicited, and does not intend to solicit, comments on this proposed rule change. The Exchange has not received any unsolicited written comments from members or other interested parties.

III. Date of Effectiveness of the Proposed Rule Change and Timing for Commission Action

Because the foregoing proposed rule change does not significantly affect the protection of investors or the public interest, does not impose any significant burden on competition, and, by its terms, does not become operative for 30 days from the date on which it was filed, or such shorter time as the Commission may designate, it has become effective pursuant to Section 19(b)(3)(A) of the Act [9] and Rule 19b–4(f)(6) thereunder.[10]

The Exchange has requested that the Commission waive the 30-day pre-operative delay so that the Exchange may immediately offer Exchange users the ability to better manage order flow and prevent undesirable executions with themselves or the potential for or the appearance of wash sales that may occur as a result of the velocity of trading in today's high speed marketplace. The Commission notes

[7] 15 U.S.C. 78f(b).

[8] 15 U.S.C. 78f(b)(5).

[9] 15 U.S.C. 78s(b)(3)(A).

[10] 17 CFR 240.19b–4(f)(6). In addition, Rule 19b–4(f)(6)(iii) requires the self-regulatory organization to submit to the Commission written notice of its intent to file the proposed rule change, along with a brief description and text of the proposed rule change, at least five business days prior to the date of filing of the proposed rule change, or such shorter time as designated by the Commission. The Exchange has satisfied this requirement.

that the proposal is based on similar rules of other exchanges[11] and believes that waiver of the operative delay is consistent with the protection of investors and the public interest. Therefore, the Commission designates the proposal operative upon filing.[12]

At any time within 60 days of the filing of the proposed rule change, the Commission summarily may temporarily suspend such rule change if it appears to the Commission that such action is necessary or appropriate in the public interest, for the protection of investors, or otherwise in furtherance of the purposes of the Act.

IV. Solicitation of Comments

Interested persons are invited to submit written data, views, and arguments concerning the foregoing, including whether the proposed rule change is consistent with the Act. Comments may be submitted by any of the following methods:

Electronic Comments

- Use the Commission's Internet comment form (*http://www.sec.gov/rules/sro.shtml*); or
- Send an e-mail to *rule-comments@sec.gov*. Please include File Number SR–EDGA–2010–19 on the subject line.

Paper Comments

- Send paper comments in triplicate to Elizabeth M. Murphy, Secretary, Securities and Exchange Commission, 100 F Street, NE., Washington, DC 20549–1090.

All submissions should refer to File Number SR–EDGA–2010–19. This file number should be included on the subject line if e-mail is used. To help the Commission process and review your comments more efficiently, please use only one method. The Commission will post all comments on the Commission's Internet Web site (*http://www.sec.gov/rules/sro.shtml*). Copies of the submission, all subsequent amendments, all written statements with respect to the proposed rule change that are filed with the Commission, and all written communications relating to the proposed rule change between the Commission and any person, other than those that may be withheld from the public in accordance with the provisions of 5 U.S.C. 552, will be available for Web site viewing and printing in the Commission's Public Reference Room, 100 F Street, NE., Washington, DC 20549, on official business days between the hours of 10 a.m. and 3 p.m. Copies of the filing also will be available for inspection and copying at the principal office of the Exchange. All comments received will be posted without change; the Commission does not edit personal identifying information from submissions. You should submit only information that you wish to make available publicly. All submissions should refer to File Number SR–EDGA–2010–19 and should be submitted on or before December 30, 2010.

For the Commission, by the Division of Trading and Markets, pursuant to delegated authority.[13]

Florence E. Harmon,

Deputy Secretary.

[FR Doc. 2010–30943 Filed 12–8–10; 8:45 am]

BILLING CODE 8011–01–P

[11] *See* Securities Exchange Act Release No. 60182 (June 26, 2009), 74 FR 32014 (July 6, 2009) (SR–NASDAQ–2009–057); Securities Exchange Act Release No. 60191 (June 30, 2009) (SR–NYSEArca–2009–058); Securities Exchange Act Release No. 60266 (July 9, 2009), 74 FR 34380 (July 15, 2009) (SR–BATS–2009–022); Securities Exchange Act Release No. 62102 (May 13, 2010), 75 FR 28670 (May 21, 2010) (SR–BATS–2010–011).

[12] For purposes only of waiving the 30-day operative delay, the Commission has considered the proposed rule's impact on efficiency, competition, and capital formation. *See* 15 U.S.C. 78c(f).

[13] 17 CFR 200.30–3(a)(12).

SECURITIES AND EXCHANGE COMMISSION

[Release No. 34–63422; File No. SR–CBOE–2010–105]

Self-Regulatory Organizations; Chicago Board Options Exchange, Incorporated: Notice of Filing and Immediate Effectiveness of Proposed Rule Change Relating to Extension of Waiver of Transaction Fee for Public Customer Orders in SPDR Options Executed in Open Outcry or in the Automated Improvement Mechanism

December 3, 2010.

Pursuant to Section 19(b)(1) of the Securities Exchange Act of 1934, 15 U.S.C. 78s(b)(1), notice is hereby given that on November 30, 2010, Chicago Board Options Exchange, Incorporated ("CBOE" or the "Exchange") filed with the Securities and Exchange Commission ("Commission") the proposed rule change as described in Items I and II below, which Items have been prepared by CBOE. The Commission is publishing this notice to solicit comments on the proposed rule change from interested persons.

I. Self-Regulatory Organization's Statement of the Terms of Substance of the Proposed Rule Change

Chicago Board Options Exchange, Incorporated ("CBOE" or "Exchange") proposes to amend its Fees Schedule to extend through March 31, 2011, a waiver of the transaction fee for public customer orders in options on Standard & Poor's Depositary Receipts that are executed in open outcry or in the Automated Improvement Mechanism. The text of the proposed rule change is available on the Exchange's Web site (*http://www.cboe.org/legal*), at the Exchange's Office of the Secretary and at the Commission.

II. Self-Regulatory Organization's Statement of the Purpose of, and Statutory Basis for, the Proposed Rule Change

In its filing with the Commission, CBOE included statements concerning the purpose of and basis for the proposed rule change and discussed any comments it received on the proposed rule change. The text of these statements may be examined at the places specified in Item IV below. CBOE has prepared summaries, set forth in sections (A), (B), and (C) below, of the most significant aspects of such statements.

A. Self-Regulatory Organization's Statement of the Purpose of, and Statutory Basis for, Proposed Rule Change

1. Purpose

Effective September 7, 2010, the Exchange waived the $.18 per contract transaction fee for public customer ("C" origin code) orders in options on Standard & Poor's Depositary Receipts ("SPDR options") that are executed in open outcry or in the Automated Improvement Mechanism ("AIM").[1] This fee waiver is due to expire on November 30, 2010. The Exchange proposes to extend the fee waiver through March 31, 2011.[2] The proposed fee waiver is intended to attract more customer volume on the Exchange in this product.

2. Statutory Basis

The Exchange believes the proposed rule change is consistent with Section

[1] *See* Securities Exchange Act Release No. 34–62902 (September 14, 2010), 75 FR 57313 (September 20, 2010), and CBOE Fees Schedule, footnote 8. AIM is an electronic auction system that exposes certain orders electronically in an auction to provide such orders with the opportunity to receive an execution at an improved price. AIM is governed by CBOE Rule 6.74A.

[2] The Exchange notes that transaction fees are also currently waived for customer orders of 99 contracts or less in ETF (including SPDR options), ETN and HOLDRs options. *See* CBOE Fees Schedule, footnote 9.

6(b) of the Securities Exchange Act of 1934 ("Act"),[3] in general, and furthers the objectives of Section 6(b)(4)[4] of the Act in particular, in that it is designed to provide for the equitable allocation of reasonable dues, fees, and other charges among its members and other persons using its facilities. The Exchange believes the proposed extension of the fee waiver is reasonable because it would continue to provide cost savings during the extended waiver period for public customers trading SPDR options and is consistent with other fees assessed by the Exchange. The Exchange assesses manually executed broker-dealer orders a different rate ($.25 per contract) as compared to electronically executed broker-dealer orders ($.45 per contract), and a different rate ($.20 per contract) for broker-dealer orders executed on AIM as compared to other electronic executions and manual executions of broker-dealer orders.[5] Other exchange fee schedules also distinguish between electronically and non-electronically executed orders.[6] The Exchange believes the proposed fee waiver is equitable because it would apply uniformly to all public customers trading SPDR options.

B. Self-Regulatory Organization's Statement on Burden on Competition

CBOE does not believe that the proposed rule change will impose any burden on competition that is not necessary or appropriate in furtherance of purposes of the Act.

C. Self-Regulatory Organization's Statement on Comments on the Proposed Rule Change Received From Members, Participants or Others

No written comments were solicited or received with respect to the proposed rule change.

III. Date of Effectiveness of the Proposed Rule Change and Timing for Commission Action

The foregoing rule change has become effective pursuant to Section 19(b)(3)(A) of the Act[7] and subparagraph (f)(2) of Rule 19b–4[8] thereunder. At any time within 60 days of the filing of the proposed rule change, the Commission summarily may temporarily suspend such rule change if it appears to the Commission that such action is necessary or appropriate in the public interest, for the protection of investors, or otherwise in furtherance of the purposes of the Act.

IV. Solicitation of Comments

Interested persons are invited to submit written data, views, and arguments concerning the foregoing, including whether the proposed rule change is consistent with the Act. Comments may be submitted by any of the following methods:

Electronic Comments

- Use the Commission's Internet comment form (*http://www.sec.gov/rules/sro.shtml*); or
- Send an e-mail to *rule-comments@sec.gov.* Please include File Number SR–CBOE–2010–105 on the subject line.

Paper Comments

- Send paper comments in triplicate to Elizabeth M. Murphy, Secretary, Securities and Exchange Commission, 100 F Street, NE., Washington, DC 20549.

All submissions should refer to File Number SR–CBOE–2010–105. This file number should be included on the subject line if e-mail is used. To help the Commission process and review your comments more efficiently, please use only one method. The Commission will post all comments on the Commission's Internet website (*http://www.sec.gov/rules/sro.shtml).* Copies of the submission, all subsequent amendments, all written statements with respect to the proposed rule change that are filed with the Commission, and all written communications relating to the proposed rule change between the Commission and any person, other than those that may be withheld from the public in accordance with the provisions of 5 U.S.C. 552, will be available for website viewing and printing in the Commission's Public Reference Room, 100 F Street, NE., Washington, DC 20549 on official business days between the hours of 10 a.m. and 3 p.m. Copies of such filing also will be available for inspection and copying at the principal office of CBOE. All comments received will be posted without change; the Commission does not edit personal identifying information from submissions. You should submit only information that you wish to make available publicly. All submissions should refer to File Number SR–CBOE–2010–105 and should be submitted on or before December 30, 2010.

For the Commission, by the Division of Trading and Markets, pursuant to delegated authority.[9]

Florence E. Harmon,

Deputy Secretary.

[FR Doc. 2010–30941 Filed 12–8–10; 8:45 am]

BILLING CODE 8011–01–P

[3] 15 U.S.C. 78f(b).

[4] 15 U.S.C. 78f(b)(4).

[5] *See* CBOE Fees Schedule, Section 1.

[6] NASDAQ OMX PHLX, Inc. categorizes its equity options transaction fees for Specialists, ROTs, SQTs, RSQTs and Broker-Dealers as either electronic or non-electronic. *See* NASDAQ OMX PHLX Fees Schedule, Equity Options Fees. NYSE Amex, Inc. categorizes its options transaction fees for Non-NYSE Amex Options Market Makers, Broker-Dealers, Professional Customers, Non BD Customers and Firms as either electronic or manual. *See* NYSE Amex Options Fees Schedule, Trade Related Charges. NYSE Arca, Inc. categorizes its options transaction fees for Customers, Firms and Broker-Dealers as either electronic or manual. *See* NYSE Arca Options Fees Schedule, Trade Related Charges.

[7] 15 U.S.C. 78s(b)(3)(A).

[8] 17 CFR 240.19b–4(f)(2).

[9] 17 CFR 200.30–3(a)(12).

DEPARTMENT OF STATE

[Public Notice 7263]

In the Matter of the Designation of Fahd Mohammed Ahmed al-Quso, also known as Fahd al-Quso, also known as Abu Huthaifah, also known as Abu Huthaifah al-Yemeni, also known as Abu Huthaifah al-Adani, also known as Abu al-Bara', also known as Abu Hathayfah al-Adani, also known as Fahd Mohammed Ahmed al-Awlaqi, also known as Huthaifah al-Yemeni, also known as Abu Huthaifah al-Abu al-Bara', also known as Fahd Muhammad Ahmad al-Kusso, as a Specially Designated Global Terrorist pursuant to Section 1(b) of Executive Order 13224, as Amended

Acting under the authority of and in accordance with section 1(b) of Executive Order 13224 of September 23, 2001, as amended by Executive Order 13268 of July 2, 2002, and Executive Order 13284 of January 23, 2003, I hereby determine that the individual known as Fahd Mohammed Ahmed al-Quso, also known as Fahd al-Quso, also known as Abu Huthaifah, also known as Abu Huthaifah al-Yemeni, also known as Abu Huthaifah al-Adani, also known as Abu al-Bara', also known as Abu Hathayfah al-Adani, also known as Fahd Mohammed Ahmed al-Awlaqi, also known as Huthaifah al-Yemeni, also known as Abu Huthaifah al-Abu al-Bara', also known as Fahd Muhammad Ahmad al-Kusso, committed, or poses a significant risk of committing, acts of terrorism that threaten the security of U.S. nationals or the national security, foreign policy, or economy of the United States.

Consistent with the determination in section 10 of Executive Order 13224 that "prior notice to persons determined to be subject to the Order who might have

a constitutional presence in the United States would render ineffectual the blocking and other measures authorized in the Order because of the ability to transfer funds instantaneously," I determine that no prior notice needs to be provided to any person subject to this determination who might have a constitutional presence in the United States, because to do so would render ineffectual the measures authorized in the Order.

This notice shall be published in the **Federal Register.**

Dated: *October 18, 2010.*

Hillary Rodham Clinton,

Secretary of State.

[FR Doc. 2010–31001 Filed 12–8–10; 8:45 am]

BILLING CODE 4710–10–P

DEPARTMENT OF STATE

[Public Notice 7260]

Bureau of Educational and Cultural Affairs Request for Grant Proposals: Future Leaders Exchange Civic Education Workshop

Announcement Type: New Grant.

Funding Opportunity Number: ECA/PE/C/PY–11–16.

Catalog of Federal and Domestic Assistance Number: 19.415.

Key Dates:

Application Deadline: January 4, 2011.

Executive Summary: The Office of Citizen Exchanges, Youth Programs Division, of the Bureau of Educational and Cultural Affairs announces an open competition to conduct the Spring Civic Education Workshop for students participating in the academic year Future Leaders Exchange (FLEX) program. The goal of the Spring Workshop is to broaden the participants' knowledge and understanding of the democratic concepts that are integral to a civil society and to provide them with tools they can take home to aid in the transformation of their countries. Public and private non-profit organizations meeting the provisions described in IRS regulation 26 CFR 1.501(c) may submit proposals to develop and conduct a one-week workshop in Washington, DC, in Spring 2011. The workshop should include approximately 100 high school students from 10 Eurasian countries who are attending school in the United States during the 2010/11 academic year. Spring Workshop participants will be selected through an essay contest from among a group of approximately 976 students who are participating in the academic year component of the Division's Future Leaders Exchange program. Provision of cost sharing to maximize the number of participants will be looked at very favorably.

I. Funding Opportunity Description

Authority: Overall grant making authority for this program is contained in the Mutual Educational and Cultural Exchange Act of 1961, Public Law 87–256, as amended, also known as the Fulbright-Hays Act. The purpose of the Act is "to enable the Government of the United States to increase mutual understanding between the people of the United States and the people of other countries * * *; to strengthen the ties which unite us with other nations by demonstrating the educational and cultural interests, developments, and achievements of the people of the United States and other nations * * * and thus to assist in the development of friendly, sympathetic and peaceful relations between the United States and the other countries of the world." The funding authority for the program above is provided through legislation.

Purpose: The Civic Education Workshop should provide an opportunity for participants to gain a better understanding of the democratic concepts and values that are such an integral part of American society and culture. Concepts such as citizen empowerment, volunteerism, community action, and debate should be included in program components. The program should also enable participants to learn firsthand about the Federal system of government, observe government institutions, hear about and discuss issues on the Federal agenda, and interact with government officials. Dedicated time blocks should be provided for exposure to and education about the American election process. Special attention also should be paid to those issues that will be especially significant to people from the countries of the former Soviet Union.

Responsibilities: The recipient of the grant is responsible for developing and conducting the Civic Education Workshop based on guidelines set forth by the Division. The grantee organization will also be responsible for coordinating roundtrip travel arrangements for each participant in the Spring Workshop from his/her host community to Washington, DC, and for providing room and board for students during their time in Washington. The grantee must be amenable to working with the Department of State and the Bureau in arranging certain briefings and visits, as the opportunity arises.

The Spring Workshop should be arranged for seven days, including arrival and departure. The grantee organization will be provided with the names of the students who will have been chosen for the Spring Workshop after competing in an essay contest. The essays will have been reviewed by independent, objective, specially-trained selectors.

Guidelines: The Spring Workshop should be held in early spring 2011 during a time when Congress is in session. Proposals must effectively describe the organization's ability to accomplish the following essential components of the program:

1. Provide a Civic Education Workshop in Washington, DC, as described above and held at the time period indicated. Program components should include sessions on U.S. domestic and foreign policy, the role of the media in a civil society, citizen empowerment, volunteerism and community activism, and federalism.
2. Provide pre-program training for organization staff on the society and culture of relevant countries *before the workshop.*
3. Provide housing and meals for all students throughout the Workshop.
4. Arrange roundtrip travel for Spring Workshop students from their U.S. host communities to Washington, DC, in coordination with FLEX placement organizations. (**Note:** Students will likely be traveling from most of the 50 states.) Provide ground transportation for students in the DC area, including to and from Washington area airports.
5. Provide opportunities to attend cultural events and visit museums and monuments.
6. Coordinate with the Bureau's Youth Programs Division and the Office of Legislative Affairs in making appropriate arrangements for individual meetings for all Spring Workshop participants with their respective Members of Congress (Senators and/or Representative).
7. Provide staff to assist in case of medical emergencies.
8. Incorporate a component into the Spring Workshop designed to facilitate students' transition from the DC program back to their host communities. Include a description of the ways in which all students will be encouraged to share what they have learned, both in their U.S. host communities and when they return to their home countries.
9. Provide a mechanism for evaluation of the program in terms of its impact on the students and its success in fulfilling the objectives.

A competitive proposal will incorporate important elements of American culture in sessions that are largely interactive and designed to

appeal to high school-age students. The Workshop must be substantive and academic while, at the same time, be paced realistically to meet the needs of young people.

Significant cost sharing is important because it will enable a greater number of students to participate. Therefore, those proposals that show more generous and creative cost sharing will be more favorably viewed. Please refer to the Program Objectives, Goals, and Implementation (POGI) section of the Solicitation Package for greater detail regarding the design of component parts as well as other program information.

II. Award Information

Type of Award: Grant Agreement.

Fiscal Year Funds: FY 2011.

Approximate Total Funding: $184,000.

Approximate Number of Awards: 1.

Anticipated Award Date: Pending availability of funds, February 2011.

Anticipated Project Completion Date: August 31, 2011.

Additional Information: Pending successful implementation of this program and the availability of funds in subsequent fiscal years, it is ECA's intent to renew this grant for two additional fiscal year, before openly competing it again.

III. Eligibility Information

III.1. Eligible Applicants

Applications may be submitted by public and private non-profit organizations meeting the provisions described in Internal Revenue Code section 26 U.S.C. 501(c)(3).

III.2. Cost Sharing or Matching Funds

There is no minimum or maximum percentage required for this competition. However, the Bureau encourages applicants to provide maximum levels of cost sharing and funding in support of its programs.

When cost sharing is offered, it is understood and agreed that the applicant must provide the amount of cost sharing as stipulated in its proposal and later included in an approved grant agreement. Cost sharing may be in the form of allowable direct or indirect costs. For accountability, the grantee organization must maintain written records to support all costs which are claimed as its contribution, as well as costs to be paid by the Federal government. Such records are subject to audit. The basis for determining the value of cash and in-kind contributions must be in accordance with OMB Circular A–110, (Revised), Subpart C.23—Cost Sharing and Matching. In the event the organization does not provide the minimum amount of cost sharing as stipulated in the approved budget, ECA's contribution will be reduced in like proportion.

III.3. Other Eligibility Requirements

(a) Bureau grant guidelines require that organizations with less than four years experience in conducting international exchanges be limited to $60,000 in Bureau funding. ECA anticipates awarding one grant, in an amount up to $184,000 to support program and administrative costs required to implement this program. Therefore, organizations with less than four years experience in conducting international exchanges are ineligible to apply under this competition. As stated above, the Bureau encourages applicants to provide maximum levels of cost-sharing and funding from private sources in support of its programs.

(b) Technical Eligibility: All proposals must comply with the Application and Submission requirements described below or they will result in your proposal being declared technically ineligible and given no further consideration in the review process.

IV. Application and Submission Information

Note: Please read the complete announcement before sending inquiries or submitting proposals. Once the RFGP deadline has passed, Bureau staff may not discuss this competition with applicants until the proposal review process has been completed.

IV.1. Contact Information To Request an Application Package

Please contact the Office of Citizen Exchanges, Youth Programs Division (ECA/PE/C/PY), SA–5 Floor 3, U.S. Department of State, 2200 C Street, NW., Washington, DC 20037, telephone (202) 632–6052; fax (202) 632–9355; e-mail: *SchulzAJ@state.gov* to request a Solicitation Package. Please refer to the Funding Opportunity Number (ECA/PE/C/PY–11–16) located at the top of this announcement when making your request.

Alternatively, an electronic application package may be obtained from grants.gov. Please see section IV.3f for further information.

The Solicitation Package contains the Proposal Submission Instruction (PSI) document which consists of required application forms, and standard guidelines for proposal preparation. It also contains the Project Objectives, Goals and Implementation (POGI) document, which provides specific information, award criteria and budget instructions tailored to this competition.

Please specify ECA Program Officer Amy Schulz and refer to the Funding Opportunity Number ECA/PE/C/PY–11–16 on all other inquiries and correspondence.

IV.2. To Download a Solicitation Package via Internet

The entire Solicitation Package may be downloaded from the Bureau's Web site at *http://exchanges.state.gov/grants/open2.html,* or from the Grants.gov Web site at *http://www.grants.gov.*

Please read all information before downloading.

IV.3. Content and Form of Submission

Applicants must follow all instructions in the Solicitation Package. The application should be submitted per the instructions under IV.3f. "Application Deadline and Methods of Submission" section below.

IV.3a. You are required to have a Dun and Bradstreet Data Universal Numbering System (DUNS) number to apply for a grant or cooperative agreement from the U.S. Government. This number is a nine-digit identification number, which uniquely identifies business entities. Obtaining a DUNS number is easy and there is no charge. To obtain a DUNS number, access *http://www.dunandbradstreet.com* or call 1–866–705–5711. Please ensure that your DUNS number is included in the appropriate box of the SF–424 which is part of the formal application package.

IV.3b. All proposals must contain an executive summary, proposal narrative and budget.

Please Refer to the Solicitation Package. It contains the mandatory Proposal Submission Instructions (PSI) document and the Project Objectives, Goals and Implementation (POGI) document for additional formatting and technical requirements.

IV.3c. All Federal award recipients and sub-recipients must maintain current registrations in the Central Contractor Registration (CCR) database and have a Dun and Bradstreet Data Universal Numbering System (DUNS) number. Recipients and sub-recipients must maintain accurate and up-to-date information in the CCR until all program and financial activity and reporting have been completed. All entities must review and update the information at least annually after the initial registration and more frequently if required information changes or another award is granted.

You must have nonprofit status with the IRS at the time of application. **Please**

note: Effective January 7, 2009, all applicants for ECA Federal assistance awards must include in their application the names of directors and/or senior executives (current officers, trustees, and key employees, regardless of amount of compensation). In fulfilling this requirement, applicants must submit information in one of the following ways:

(1) Those who file Internal Revenue Service Form 990, "Return of Organization Exempt From Income Tax," must include a copy of relevant portions of this form.

(2) Those who do not file IRS Form 990 must submit information above in the format of their choice.

In addition to final program reporting requirements, award recipients will also be required to submit a one-page document, derived from their program reports, listing and describing their grant activities. For award recipients, the names of directors and/or senior executives (current officers, trustees, and key employees), as well as the one-page description of grant activities, will be transmitted by the State Department to OMB, along with other information required by the Federal Funding Accountability and Transparency Act (FFATA), and will be made available to the public by the Office of Management and Budget on its *USASpending.gov* Web site as part of ECA's FFATA reporting requirements.

If your organization is a private nonprofit which has not received a grant or cooperative agreement from ECA in the past three years, or if your organization received nonprofit status from the IRS within the past four years, you must submit the necessary documentation to verify nonprofit status as directed in the PSI document. Failure to do so will cause your proposal to be declared technically ineligible.

V.3d. Please take into consideration the following information when preparing your proposal narrative:

IV.3d.1 Adherence to All Regulations Governing the J Visa

The Office of Citizen Exchanges of the Bureau of Educational and Cultural Affairs is the official program sponsor of the exchange program covered by this RFGP, and an employee of the Bureau will be the "Responsible Officer" for the program under the terms of 22 CFR 62, which covers the administration of the Exchange Visitor Program (J visa program). Under the terms of 22 CFR 62, organizations receiving grants under this RFGP will be third parties "cooperating with or assisting the sponsor in the conduct of the sponsor's program." The actions of grantee program organizations shall be "imputed to the sponsor in evaluating the sponsor's compliance with" 22 CFR 62. Therefore, the Bureau expects that any organization receiving a grant under this competition will render all assistance necessary to enable the Bureau to fully comply with 22 CFR 62 *et seq.*

The Bureau of Educational and Cultural Affairs places critically important emphasis on the secure and proper administration of Exchange Visitor (J visa) Programs and adherence by grantee program organizations and program participants to all regulations governing the J visa program status. Therefore, proposals should *explicitly state in writing* that the applicant is prepared to assist the Bureau in meeting all requirements governing the administration of Exchange Visitor Programs as set forth in 22 CFR 62. If your organization has experience as a designated Exchange Visitor Program Sponsor, the applicant should discuss its record of compliance with 22 CFR 62 *et. seq.,* including the oversight of its responsible Officers and Alternate Responsible Officers, monitoring of participants, proper maintenance and security of forms, record-keeping, reporting and other requirements.

The Office of Citizen Exchanges of ECA will be responsible for issuing DS–2019 forms to participants in this program. A copy of the complete regulations governing the administration of Exchange Visitor (J) programs is available at *http://exchanges.state.gov* or from: Office of Designation, Private Sector Programs Division U.S. Department of State, ECA/EC/D/PS, SA–5, 5th Floor, 2200 C Street, NW., Washington, DC 20037.

IV.3d.2 Diversity, Freedom and Democracy Guidelines

Pursuant to the Bureau's authorizing legislation, programs must maintain a non-political character and should be balanced and representative of the diversity of American political, social, and cultural life. "Diversity" should be interpreted in the broadest sense and encompass differences including, but not limited to ethnicity, race, gender, religion, geographic location, socio-economic status, and physical disabilities. Applicants are strongly encouraged to adhere to the advancement of this principle both in program administration and in program content. Please refer to the review criteria under the "Support for Diversity" section for specific suggestions on incorporating diversity into the total proposal. Public Law 104–319 provides that "in carrying out programs of educational and cultural exchange in countries whose people do not fully enjoy freedom and democracy, the Bureau "shall take appropriate steps to provide opportunities for participation in such programs to human rights and democracy leaders of such countries." Public Law 106—113 requires that the governments of the countries described above do not have inappropriate influence in the selection process. Proposals should reflect advancement of these goals in their program contents, to the full extent deemed feasible.

IV.3d.3. Program Monitoring and Evaluation

Proposals must include a plan to monitor and evaluate the project's success, both as the activities unfold and at the end of the program. The Bureau recommends that your proposal include a draft survey questionnaire or other technique plus a description of a methodology to use to link outcomes to original project objectives. The Bureau expects that the grantee will track participants or partners and be able to respond to key evaluation questions, including satisfaction with the program, learning as a result of the program, changes in behavior as a result of the program, and effects of the program on institutions (institutions in which participants work or partner institutions). The evaluation plan should include indicators that measure gains in mutual understanding as well as substantive knowledge.

Successful monitoring and evaluation depend heavily on setting clear goals and outcomes at the outset of a program. Your evaluation plan should include a description of your project's objectives, your anticipated project outcomes, and how and when you intend to measure these outcomes (performance indicators). The more that outcomes are "smart" (specific, measurable, attainable, results-oriented, and placed in a reasonable time frame), the easier it will be to conduct the evaluation. You should also show how your project objectives link to the goals of the program described in this RFGP.

Your monitoring and evaluation plan should clearly distinguish between program *outputs* and *outcomes. Outputs* are products and services delivered, often stated as an amount. Output information is important to show the scope or size of project activities, but it cannot substitute for information about progress towards outcomes or the results achieved. Examples of outputs include the number of people trained or the number of seminars conducted. *Outcomes,* in contrast, represent

specific results a project is intended to achieve and is usually measured as an extent of change. Findings on outputs and outcomes should both be reported, but the focus should be on outcomes.

We encourage you to assess the following four levels of outcomes, as they relate to the program goals set out in the RFGP (listed here in increasing order of importance):

1. Participant satisfaction with the program and exchange experience.
2. Participant learning, such as increased knowledge, aptitude, skills, and changed understanding and attitude. Learning includes both substantive (subject-specific) learning and mutual understanding.
3. Participant behavior, concrete actions to apply knowledge in work or community; greater participation and responsibility in civic organizations; interpretation and explanation of experiences and new knowledge gained; continued contacts between participants, community members, and others.
4. Institutional changes, such as increased collaboration and partnerships, policy reforms, new programming, and organizational improvements.

Please note: Consideration should be given to the appropriate timing of data collection for each level of outcome. For example, satisfaction is usually captured as a short-term outcome, whereas behavior and institutional changes are normally considered longer-term outcomes.

Overall, the quality of your monitoring and evaluation plan will be judged on how well it (1) specifies intended outcomes; (2) gives clear descriptions of how each outcome will be measured; (3) identifies when particular outcomes will be measured; and (4) provides a clear description of the data collection strategies for each outcome (*i.e.*, surveys, interviews, or focus groups). (Please note that evaluation plans that deal only with the first level of outcomes [satisfaction] will be deemed less competitive under the present evaluation criteria.)

The grantee organization will be required to provide reports analyzing its evaluation findings to the Bureau in its regular program reports. All data collected, including survey responses and contact information, must be maintained for a minimum of three years and provided to the Bureau upon request.

IV.3e. Please take the following information into consideration when preparing your budget:

IV.3e.1. Applicants must submit SF–424A—"Budget Information—Non-Construction Programs" along with a comprehensive budget for the entire program. The award may not exceed $184,000. There must be a summary budget as well as breakdowns reflecting both administrative and program budgets. Applicants may provide separate sub-budgets for each program component, phase, location, or activity to provide clarification. Proposals that maximize the number of students will be favorably viewed. One grant will be awarded for this activity.

Please refer to the Solicitation Package for further details, including a list of allowable costs for the program, complete budget guidelines, and formatting instructions.

IV.3f. Application Deadline and Methods of Submission

Application Deadline Date: Tuesday, January 4, 2011.

Reference Number: ECA/PE/C/PY–11–16.

Methods of Submission: Applications may be submitted in one of two ways:

(1.) In hard-copy, via a nationally recognized overnight delivery service (*i.e.,* DHL, Federal Express, UPS, Airborne Express, or U.S. Postal Service Express Overnight Mail, *etc.*), or

(2.) Electronically through *http://www.grants.gov.*

Along with the Project Title, all applicants must enter the above Reference Number in Box 11 on the SF–424 contained in the mandatory Proposal Submission Instructions (PSI) of the solicitation document.

IV.3f.1—Submitting Printed Applications

Applications must be shipped no later than the above deadline. Delivery services used by applicants must have in-place, centralized shipping identification and tracking systems that may be accessed via the Internet and delivery people who are identifiable by commonly recognized uniforms and delivery vehicles. Proposals shipped on or before the above deadline but received at ECA more than seven days after the deadline will be ineligible for further consideration under this competition. Proposals shipped after the established deadlines are ineligible for consideration under this competition. ECA will *not* notify you upon receipt of application. It is each applicant's responsibility to ensure that each package is marked with a legible tracking number and to monitor/confirm delivery to ECA via the Internet. Delivery of proposal packages *may not* be made via local courier service or in person for this competition. Faxed documents will not be accepted at any time. Only proposals submitted as stated above will be considered.

Important note: When preparing your submission please make sure to include one extra copy of the completed SF–424 form and place it in an envelope addressed to "ECA/EX/PM".

The original and seven copies of the application should be sent to: Program Management Division, ECA–IIP/EX/PM, Ref.: ECA/PE/C/PY–11–16, SA–5, Floor 4, Department of State, 2200 C Street, NW., Washington, DC 20037.

IV.3f.2—Submitting Electronic Applications

Applicants have the option of submitting proposals electronically through Grants.gov (*http://www.grants.gov*). Complete solicitation packages are available at Grants.gov in the "Find" portion of the system.

Please follow the instructions available in the 'Get Started' portion of the site (*http://www.grants.gov/GetStarted*).

Several of the steps in the Grants.gov registration process could take several weeks. Therefore, applicants should check with appropriate staff within their organizations immediately after reviewing this RFGP to confirm or determine their registration status with Grants.gov.

Once registered, the amount of time it can take to upload an application will vary depending on a variety of factors including the size of the application and the speed of your internet connection. In addition, validation of an electronic submission via Grants.gov can take up to two business days.

Therefore, we strongly recommend that you not wait until the application deadline to begin the submission process through Grants.gov.

The Grants.gov Web site includes extensive information on all phases/aspects of the Grants.gov process, including an extensive section on frequently asked questions, located under the "For Applicants" section of the Web site. ECA strongly recommends that all potential applicants review thoroughly the Grants.gov Web site, well in advance of submitting a proposal through the Grants.gov system. ECA bears no responsibility for data errors resulting from transmission or conversion processes.

Direct all questions regarding Grants.gov registration and submission to:

Grants.gov Customer Support, Contact Center Phone: 800–518–4726, Business Hours: Monday–Friday, 7 a.m.–9 p.m. Eastern Time, E-mail: *support@grants.gov.*

Applicants have until midnight (12 a.m.), Washington, DC time of the closing date to ensure that their entire application has been uploaded to the Grants.gov site. *There are no exceptions to the above deadline. Applications uploaded to the site after midnight of the application deadline date will be automatically rejected by the grants.gov system, and will be technically ineligible.*

Please refer to the Grants.gov Web site, for definitions of various "application statuses" and the difference between a submission receipt and a submission validation. Applicants will receive a validation e-mail from grants.gov upon the successful submission of an application. Again, validation of an electronic submission via Grants.gov can take up to two business days. *Therefore, we strongly recommend that you not wait until the application deadline to begin the submission process through Grants.gov.* ECA will *not* notify you upon receipt of electronic applications.

It is the responsibility of all applicants submitting proposals via the Grants.gov web portal to ensure that proposals have been received by Grants.gov in their entirety, and ECA bears no responsibility for data errors resulting from transmission or conversion processes.

IV.3g. Intergovernmental Review of Applications Executive Order 12372 Does Not Apply to This Program.

V. Application Review Information

V.1. Review Process

The Bureau will review all proposals for technical eligibility. Proposals will be deemed ineligible if they do not fully adhere to the guidelines stated herein and in the Solicitation Package. All eligible proposals will be reviewed by the program office, as well as the Public Diplomacy section overseas, where appropriate. Eligible proposals will be subject to compliance with Federal and Bureau regulations and guidelines and forwarded to Bureau grant panels for advisory review. Proposals may also be reviewed by the Office of the Legal Adviser or by other Department elements. Final funding decisions are at the discretion of the Department of State's Assistant Secretary for Educational and Cultural Affairs. Final technical authority for assistance awards (grants or cooperative agreements) resides with the Bureau's Grants Officer.

Review Criteria. Technically eligible applications will be competitively reviewed according to the criteria stated below. These criteria are not rank ordered and all carry equal weight in the proposal evaluation:

1. Quality of the Program Idea: Proposals should exhibit originality, substance, precision, and relevance to the Bureau's mission, as well as the objectives of the FLEX program. Program design must reflect an understanding of young people and of cultural traits that would be specific to this population.

2. Program Planning: Detailed agenda and relevant work plan should demonstrate substantive undertakings and logistical capacity. Agenda and plan should adhere to the program overview and guidelines described above.

3. Ability to Achieve Program Objectives: Objectives should be reasonable, feasible, and flexible. Proposals should clearly demonstrate how the institution will meet the program's objectives and plan.

4. Multiplier Effect/Impact: Proposed programs should describe the impact that workshop participants will have on others, both in their U.S. host communities and in their respective Eurasian country after they return home. There should be a plan for providing students with tools they can take back to their Eurasian home countries to implement concepts and ideas they have gained from the workshop. Proposals also should explain how academic year students will be prepared to transition back to their host communities.

5. Support of Diversity: Proposals should demonstrate substantive support of the Bureau's policy on diversity. Achievable and relevant features should be cited in both program administration (program venue and program evaluation) and program content (topics of program sessions and meetings, resource materials and follow-up activities).

6. Institutional Capacity/Record: Proposed personnel and institutional resources should be adequate and appropriate to achieve the program or project's goals. Proposals should demonstrate an institutional record of successful exchange programs, including responsible fiscal management and full compliance with all reporting requirements for past Bureau grants as determined by Bureau Grant Staff. The Bureau will consider the past performance of prior recipients and the demonstrated potential of new applicants.

7. Project Evaluation: Proposals should include a plan to evaluate the activity's success, both as the activities unfold and at the end of the program. A draft survey questionnaire or other technique plus description of a methodology to use to link outcomes to original project objectives is recommended. The successful applicant will be expected to submit a final report.

8. Cost-Effectiveness/Cost-Sharing: The overhead and administrative components of the proposal, including salaries and honoraria, should be kept as low as possible. All other items should be necessary and appropriate. Proposals should maximize cost-sharing through other private sector support as well as institutional direct funding contributions.

VI. Award Administration Information

VI.1. Award Notices

Final awards cannot be made until funds have been appropriated by Congress, allocated and committed through internal Bureau procedures. Successful applicants will receive an Federal Assistance Award (FAA) from the Bureau's Grants Office. The FAA and the original proposal with subsequent modifications (if applicable) shall be the only binding authorizing document between the recipient and the U.S. Government. The FAA will be signed by an authorized Grants Officer, and mailed to the recipient's responsible officer identified in the application.

Unsuccessful applicants will receive notification of the results of the application review from the ECA program office coordinating this competition.

VI.2. Administrative and National Policy Requirements

Terms and Conditions for the Administration of ECA agreements include the following:

Office of Management and Budget Circular A–122, "Cost Principles for Nonprofit Organizations."

Office of Management and Budget Circular A–21, "Cost Principles for Educational Institutions."

OMB Circular A–87, "Cost Principles for State, Local and Indian Governments".

OMB Circular No. A–110 (Revised), Uniform Administrative Requirements for Grants and Agreements with Institutions of Higher Education, Hospitals, and other Nonprofit Organizations.

OMB Circular No. A–102, Uniform Administrative Requirements for Grants-in-Aid to State and Local Governments.

OMB Circular No. A–133, Audits of States, Local Government, and Non-profit Organizations.

Please reference the following websites for additional information:

http://www.whitehouse.gov/omb/grants. http://fa.statebuy.state.gov.

VI.3. Reporting Requirements

You must provide ECA with a hard copy original plus one copy of the following reports:

(1.) A final program and financial report no more than 90 days after the expiration of the award;

(2.) A concise, one-page final program report summarizing program outcomes no more than 90 days after the expiration of the award. This one-page report will be transmitted to OMB, and be made available to the public via OMB's *USAspending.gov* Web site—as part of ECA's Federal Funding Accountability and Transparency Act (FFATA) reporting requirements.

(3.) A SF–PPR, "Performance Progress Report" Cover Sheet with all program reports.

(4.) The SF–PPR–E and SF–PPR–F with the Final Performance Report.

Award recipients will be required to provide reports analyzing their evaluation findings to the Bureau in their regular program reports. (Please refer to IV. Application and Submission Instructions (IV.3.d.3) above for Program Monitoring and Evaluation information.

All data collected, including survey responses and contact information, must be maintained for a minimum of three years and provided to the Bureau upon request.

All reports must be sent to the ECA Grants Officer and ECA Program Officer listed in the final assistance award document.

VII. Agency Contacts

For questions about this announcement, contact: Amy Schulz, U.S. Department of State, Office of Citizen Exchanges/Youth Programs Division, ECA/PE/C/PY/F, SA–5, 3rd Floor, ECA/PE/C/PY–11–16, 2200 C Street, NW., Washington, DC 20037, Telephone (202) 632–6052, Fax (202) 632–9355, e-mail *SchulzAJ@state.gov.*

All correspondence with the Bureau concerning this RFGP should reference the above title and number ECA/PE/C/PY–11–16.

Please read the complete announcement before sending inquiries or submitting proposals. Once the RFGP deadline has passed, Bureau staff may not discuss this competition with applicants until the proposal review process has been completed.

VIII. Other Information

Notice: The terms and conditions published in this RFGP are binding and may not be modified by any Bureau representative. Explanatory information provided by the Bureau that contradicts published language will not be binding. Issuance of the RFGP does not constitute an award commitment on the part of the Government. The Bureau reserves the right to reduce, revise, or increase proposal budgets in accordance with the needs of the program and the availability of funds. Awards made will be subject to periodic reporting and evaluation requirements per section VI.3 above.

Dated: *December 2, 2010.*

Ann Stock,

Assistant Secretary for Educational and Cultural Affairs, Department of State.

[FR Doc. 2010–30872 Filed 12–8–10; 8:45 am]

BILLING CODE 4710–05–P

DEPARTMENT OF TRANSPORTATION

Federal Aviation Administration

Public Notice for a Change in Use of Aeronautical Property at Houlton International Airport, Houlton, Maine

AGENCY: Federal Aviation Administration (FAA), DOT.

ACTION: Request for Public Comments.

SUMMARY: The FAA is requesting public comment on the Town of Houlton, Maine's request to change a portion (36,450 s.f.) of Airport property from aeronautical use to non-aeronautical use. The property is located on Industrial Drive adjacent to Houlton International Corporation. The property will be used to expand Houlton international Corporation's facility. The property was acquired from the United States Government under Surplus Property Deed dated July 14, 1947.

The disposition of proceeds from the disposal of airport property will be in accordance with FAA's Policy and Procedures Concerning the Use of Airport Revenue, published in the **Federal Register** on February 16, 1999.

Section 125 of The Wendell H. Ford Aviation Investment and Reform Act for the 21St Century (AIR 21) requires the FM to provide an opportunity for public notice and comment to the "waiver" or "modification" of a sponsor's Federal obligation to use certain airport property for aeronautical purposes.

DATES: Comments must be received on or before January 10, 2011.

ADDRESSES: Documents are available for review by appointment by contacting Mr. Douglas Hazlett, Town Manager, Telephone 207–532–7111 or by contacting Donna R. Witte, Federal Aviation Administration, 16 New England Executive Park, Burlington, Massachusetts, Telephone 781–238–7624.

FOR FURTHER INFORMATION CONTACT: Donna R. Witte at the Federal Aviation Administration, 12 New England Executive Park, Burlington, Massachusetts 01803, Telephone 781–238–7624.

SUPPLEMENTARY INFORMATION: The following is a legal description of the property located in the Town of Houlton, County of Aroostook, State of Maine as shown on a land survey prepared by Swallow Associates entitled "Survey of Land for Shiretown Development Corp. Being Land at Houlton International Airport, Houlton, Maine" Said parcel is more particularly described as follows: Commencing at the southwesterly corner of the land conveyed to the Shiretown Development Corporation by the Town of Houlton in a deed dated October 22, 2004, and recorded in Book 4057, Page 286 in the Southern Aroostook Registry of Deeds; thence northerly on the west line of said Shiretown Development Corporation parcel on a course bearing North nine degrees fifty-three minutes forty-three seconds East (N 09 53′ 43″ E) for a distance of six hundred and zero-hundredths (600.00) feet to a ½″ pin found at the northwest corner of said Shiretown Development Corporation parcel; thence westerly on an extension of the north line of said Shiretown Development Corporation parcel on a course bearing North eighty degrees six minutes seventeen seconds West (N 80 06′ 17″ W) for a distance of sixty and ninety-hundredths (60.90) feet to a point; thence southerly on a course bearing South nine degrees fifty-three minutes forty-three seconds East (S 09 53′ 43″ E) for a distance of six hundred and zero hundredths (600.00) feet to a point; thence easterly on a course bearing South eighty degrees six minutes seventeen seconds East (S 80 06′ 17″ E) for a distance of sixty and ninety hundredths (60.90) feet to the point of beginning.

The basis of bearings for this description is magnetic from compass observation of February 4, 2008.

The above described parcel contains 36,450 square feet.

Issued in Burlington, Massachusetts, on November 19, 2010.

Bill Watson,

Acting Manager, Airports Division, New England Region.

[FR Doc. 2010–30619 Filed 12–8–10; 8:45 am]

BILLING CODE 4910–13–M

DEPARTMENT OF TRANSPORTATION

Federal Aviation Administration

Notice of Intent To Rule on Request To Release Airport Property at the Kearney Municipal Airport, Kearney, NE

AGENCY: Federal Aviation Administration, (FAA), DOT.

ACTION: Notice of request to release airport property.

SUMMARY: The FAA proposes to rule and invites public comment on the release of land at the Kearney Municipal Airport under the provisions of Section 125 of the Wendell H. Ford Aviation Investment Reform Act for the 21st Century (AIR 21).

DATES: Comments must be received on or before January 10, 2011.

ADDRESSES: Comments on this application may be mailed or delivered to the FAA at the following address: Federal Aviation Administration, Central Region, Airports Division, 901 Locust, Kansas City, Missouri 64106–2325. In addition, one copy of any comments submitted to the FAA must be mailed or delivered to Michael J. Tye, City Attorney, City of Kearney, 1419 Central Avenue, P.O. Box 636, Kearney, NE, 68848–0636.

FOR FURTHER INFORMATION CONTACT: Nicoletta Oliver, Airports Compliance Specialist, FAA, Central Region, 901 Locust, Kansas City, MO 64106–2325, (816) 329–2642.

The request to release property may be reviewed in person at this same location.

SUPPLEMENTARY INFORMATION: The FAA proposes to rule and invites public comment on the request to release property at the Kearney Municipal Airport under the provisions of AIR21.

On November 4, 2010, the FAA determined that the request to release property at the Kearney Municipal Airport, submitted by the City of Kearney, met the procedural requirements of the Federal Aviation Administration. The FAA will approve or disapprove the request, in whole or in part, no later than January 7, 2011.

The following is a brief overview of the request.

The City of Kearney requests the release of approximately 170 acres of airport property.

The land is currently not being used for aeronautical purposes. The purpose of this release is to sell the land to Delux Manufacturing Co. Inc. for use as farm land and generate revenue for the airport.

Any person may inspect the request in person at the FAA office listed above under **FOR FURTHER INFORMATION CONTACT.**

In addition, any person may, upon request, inspect the application, notice and other documents that are relevant to the request, in person at the City of Kearney, Kearney, Nebraska.

Issued in Kansas City, Missouri, on November 16, 2010.

Jim A. Johnson,

Manager, Airports Division, Central Region.

[FR Doc. 2010–30976 Filed 12–8–10; 8:45 am]

BILLING CODE 4910–13–P

DEPARTMENT OF TRANSPORTATION

Federal Railroad Administration

Environmental Impact Statement for the Milwaukee, WI (Milwaukee Intermodal Station) to Minneapolis, MN (Minneapolis Transportation Interchange) Rail Corridor

AGENCY: Federal Railroad Administration, Department of Transportation.

ACTION: Notice of intent to prepare an Environmental Impact Statement.

SUMMARY: FRA is issuing this notice to advise the public that a Tier I Environmental Impact Statement (EIS) will be prepared for the Milwaukee, WI to Minneapolis-St. Paul, MN (Milwaukee-Twin Cities) High-Speed Rail Corridor Program. The project includes passenger stations, maintenance facilities, and the construction of a high-speed rail line between Milwaukee and the Twin Cities. This corridor is part of a larger network of high-speed passenger rail corridors in the Midwest, with a hub in Chicago, IL. The effort to develop these high-speed rail corridors and expand the passenger rail system in the Midwest is known as the Midwest Regional Rail Initiative (MWRRI). FRA is issuing this notice to solicit public and agency input into the development of the scope of the EIS and to advise the public that outreach activities conducted by FRA will be considered in the preparation of the EIS. Alternatives under consideration include taking no action (No Build), as well as several build alternatives along a variety of corridors between Milwaukee and the Twin Cities.

DATES: Locations, dates, and start and end times for public meetings involving the EIS are listed in the **SUPPLEMENTARY INFORMATION** section of this notice.

FOR FURTHER INFORMATION CONTACT: Mr. Daniel Krom, Director, Passenger Rail Office, Minnesota Department of Transportation, 395 John Ireland Boulevard, MS 480, St. Paul, MN 55155, telephone (651)–366–3193; or Ms. Colleen Vaughn, Office of Railroad Policy and Development, Federal Railroad Administration (FRA), 1200 New Jersey Avenue, SE., MS–20/W38–303, Washington, DC 20590, telephone (202) 493–6096.

SUPPLEMENTARY INFORMATION: FRA, in cooperation with the Minnesota Department of Transportation (Mn/DOT), and the Wisconsin Department of Transportation (WisDOT), will prepare a Tier 1 EIS for the Milwaukee-Twin Cities High-Speed Rail Corridor Program from the Milwaukee Intermodal Station in Milwaukee, WI to the Minneapolis Transportation Interchange in Minneapolis, MN. The objective of the tiered EIS is to evaluate potential intercity passenger rail route alternatives at the corridor level and will result in the creation of a Service Development Plan for the corridor.

Objectives: The objectives of this MWRRI project are to meet current and future regional travel needs through significant improvements to the level and quality of passenger rail service and provide a stimulus for joint development in communities served by the system by:

- Using existing rail rights-of-way to connect rural, small urban, and major metropolitan areas;
- Improving safety, reliability and on-time performance;
- Providing a transportation choice for smaller communities which do not have or are under-served by commercial air service;
- Providing improved travel times that are competitive with the automobile mode; and
- Using modern train equipment operating at speeds up to 110 mph.

Environmental Review Process: The EIS will be developed in accordance with Council on Environmental Quality (CEQ) regulations (40 CFR part 1500 *et seq.*) implementing the National Environmental Policy Act (NEPA), FRA's Procedures for Considering Environmental Impacts (64 FR 28545; May 26, 1999). FRA, with Mn/DOT and WisDOT, will use a tiered process, as provided for in 40 CFR 1508.28 and in accordance with FRA guidance, in the completion of the environmental review of the Project. The Tier 1 EIS will address broad corridor-level issues and proposals. Subsequent phases or tiers will analyze, at a greater level of detail, narrower site-specific proposals based on the decisions made in Tier 1.

Tier 1: The Tier 1 EIS will result in a NEPA document with the appropriate

level of detail for corridor-level decisions and will address broad overall issues of concern, including but not limited to:

- Confirming the purpose and need for the proposed action.
- Confirming the study area appropriate to assess reasonable and feasible alternatives.
- Identifying a comprehensive set of goals and objectives for the corridor in conjunction with the project sponsors and other stakeholders. These goals and objectives will be crafted to allow comprehensive evaluation of all aspects of the project necessary to achieve the goals, including train operations, vehicles and infrastructure.
- Identifying the reasonable and feasible alternatives to be considered including a no action/no build alternative, consistent with the current and planned use of the corridor and the existing services within and adjacent to the study area.
- Developing criteria and screen alternatives to eliminate those alternatives that do not meet the purpose and need of the proposed action.
- Identifying the general alignment(s) of the reasonable and feasible alternatives.
- Identifying right-of-way requirements for the reasonable and feasible alternatives.
- Identifying the infrastructure and equipment investment requirements for the reasonable and feasible alternatives.
- Identifying the operational changes required for the reasonable and feasible alternatives.
- Describing the environmental impacts associated with proposed changes in passenger rail train frequency, speed, and on-time performance.
- Characterizing the environmental consequences of the reasonable and feasible alternatives.
- Establishing the timing and sequencing of independent actions to maintain a state of good repair and to implement the proposed action.
- Identifying a preferred alternative for route alignment.
- Selecting component projects for Tier 2 NEPA documentation.

Alternatives: A No-Build Alternative will be studied as the baseline for comparison with the proposed project. The No-Build Alternative represents other transportation modes such as auto, air travel, intercity bus, and existing rail and the physical characteristics and capacities as they exist at the time of the Tier 1 EIS, with planned and funded improvements that will be in place at the time the project becomes operational. Several alternatives will be evaluated in the Tier 1 EIS including:

- *Route A1:* This alternative uses Canadian Pacific Railway (CP) right-of-way from Milwaukee, WI to Watertown, WI; right-of-way owned by the State of Wisconsin from Watertown to Junction A in Madison; Union Pacific Railroad Company (UP) right-of-way under lease to Wisconsin & Southern Railroad (WSOR) from Junction A to Johnson Street Yard in Madison, WI; CP right-of-way from Johnson Street Yard in Madison through Portage, WI and La Crosse, WI to Red Wing, MN and to Hastings, MN; CP or BNSF Railway Co. (BNSF) right-of-way from Hastings, MN to St. Paul, MN; and CP and BNSF rights-of-way from St. Paul, MN to Minneapolis, MN.
- *Route A2:* This alternative uses CP right-of-way from Milwaukee, WI to Watertown, WI, through Portage, WI and La Crosse, WI to Red Wing, MN and to Hastings, MN; CP or BNSF right-of-way from Hastings, MN to St. Paul, MN; and CP and BNSF rights-of-way from St. Paul, MN to Minneapolis, MN.
- *Route B1:* This alternative uses CP right-of-way from Milwaukee, WI to Watertown, WI; right-of-way owned by the State of Wisconsin from Watertown to Junction A in Madison, WI; UP right-of-way under lease to WSOR from Junction A to Johnson Street Yard in Madison; CP right-of-way from Johnson Street Yard in Madison through Portage, WI to Winona, MN; Dakota, Minnesota, & Eastern Railroad Co. (DM&E) right-of-way through Rochester, MN to Owatonna, MN; UP right-of-way to Northfield, MN; CP right-of-way to St. Paul, MN; and CP and BNSF rights-of-way from St. Paul to Minneapolis, MN.
- *Route B2:* This alternative uses CP right-of-way from Milwaukee, WI to Watertown, WI, through Portage, WI to Winona, MN; DM&E right-of-way through Rochester, MN to Owatonna, MN; UP right-of-way to Northfield, MN; CP right-of way to St. Paul, MN; and CP and BNSF rights-of-way from St. Paul to Minneapolis, MN.
- *Route C1:* This alternative uses CP right-of-way from Milwaukee, WI to Watertown, WI; right-of-way owned by the State of Wisconsin from Watertown to Junction A in Madison, WI; UP right-of-way under lease to WSOR from Junction A to Johnson Street Yard in Madison; CP right-of-way from Johnson Street Yard in Madison through Portage, WI to Camp Douglas, WI; UP right-of-way through Eau Claire, WI to St. Paul, MN; and CP and BNSF rights-of-way to Minneapolis, MN.
- *Route C2:* This alternative uses CP right-of-way from Milwaukee, WI to Watertown, WI, through Portage, WI to Camp Douglas, WI; UP right-of-way through Eau Claire, WI to St. Paul, MN; and CP and BNSF rights-of-way to Minneapolis, MN.

Scoping and Comments: FRA encourages broad participation in the EIS process during scoping and subsequent review of the resulting environmental documents. Comments and suggestions are invited from all interested agencies and the public at large to ensure the full range of issues related to the proposed action and all reasonable alternatives are addressed and all significant issues are identified. In particular, FRA is interested in determining whether there are areas of environmental concern where there might be the potential for significant impacts identifiable at a corridor level. Letters describing the proposed project and soliciting comments will be sent to appropriate Federal, State, and local agencies, and appropriate railroads. Public agencies with jurisdiction are requested to advise the FRA, Mn/DOT, and WisDOT of the applicable permit and environmental review requirements of each agency, and the scope and content of the environmental information that is germane to the agency's statutory responsibilities in connection with the proposed improvements.

Agency scoping meetings have been and will be held for this project at the dates and times below. These meetings have been and will be advertised locally and held at the following cities and dates:

1. St. Paul, MN on November 29, 2010 from 5 p.m.–7 p.m.
2. La Crosse, WI/La Crescent, MN on November 30, 2010 from 5 p.m.–7 p.m.
3. Eau Claire, WI on December 1, 2010 from 5 p.m.–7 p.m.
4. Fond du Lac, WI on December 2, 2010 from 5 p.m.–7 p.m.
5. Rochester, MN on December 6, 2010 from 5 p.m.–7 p.m.
6. Madison, WI on December 7, 2010 from 5 p.m.–7 p.m.
7. Milwaukee, WI at a date and location to be determined.

Scoping meetings will also take place after the publication of this Notice in the **Federal Register**. Two additional rounds of public meetings will be held in the same seven locations stated above during February 2011 and February 2012.

Letters describing the proposed action alternatives and soliciting comments will be sent to appropriate Federal, State, and local agencies in Minnesota and Wisconsin. An iterative public involvement/information program will support the process. The program will involve newsletters, a project hotline,

informational workshops, small group meetings, and other methods to solicit and incorporate public input throughout the planning process. To ensure that the full range of issues relating to the proposed action is addressed, comments and suggestions are invited from all interested parties. Comments and questions concerning the extension of the proposed action should be directed to Mn/DOT or to the FRA at the addresses provided above. Additional information can be obtained by visiting the project Web site at *http://www.dot.state.mn.us/passengerrail/mwrri/phase7.html* or sending an email to MWRRIPhase7@state.mn.us.

Issued in Washington, DC, on December 6, 2010.

Mark E. Yachmetz,

Associate Administrator for Railroad Policy and Development.

[FR Doc. 2010–31013 Filed 12–8–10; 8:45 am]

BILLING CODE 4910–06–P

DEPARTMENT OF TRANSPORTATION

Federal Railroad Administration

Petition for Waiver of Compliance

In accordance with part 211 of title 49 Code of Federal Regulations (CFR), notice is hereby given that the Federal Railroad Administration (FRA) has received a request for a waiver of compliance from certain requirements of its safety standards. The individual petition is described below, including the party seeking relief, the regulatory provisions involved, the nature of the relief being requested, and the petitioner's arguments in favor of relief.

Madison Railroad

[Waiver Petition Docket Number FRA–2010–0158]

The Madison Railroad (MR) of Madison, Indiana, has petitioned for a permanent waiver of compliance for Locomotive Number 2013, from the requirements of the Railroad Safety Glazing Standards, Title 49 CFR part 223, which require certified glazing in all windows and with the Railroad Safety Appliance Standards, Title 49 CFR part 231, where the vertical handholds do not meet current design requirements. In addition, Caboose CMPA 79718, a standard cupola type road caboose that was built in the late 1970's, originally used by MR as their offices. MR desires to utilize this caboose to offer train rides as a community service 4 times a year. MR states all the existing glazing is safety plate glass in very good condition; however, does not comply with the Railroad Safety Glazing Standards, Title 49 CFR part 223, which require certified glazing in all caboose windows.

MR, a division of the City of Madison Port Authority, owns and operates a 25 mile Shortline from Madison to North Vernon, Indiana, approximately 4 times a week at a speed of 10 miles per hour (mph) or less. Approximately twice per month, the railroad operates on 25 miles from North Vernon to Madison to service a customer on the Madison hilltop. The locomotive operates at 10 mph or less, moves one to three loads south, and then makes a return trip with empties. Locomotive Number 2013 would normally be used as a back-up locomotive to Locomotive Number 3634.

Interested parties are invited to participate in these proceedings by submitting written views, data, or comments. FRA does not anticipate scheduling a public hearing in connection with these proceedings since the facts do not appear to warrant a hearing. If any interested party desires an opportunity for oral comment, they should notify FRA, in writing, before the end of the comment period and specify the basis for their request.

All communications concerning these proceedings should identify the appropriate docket number (*e.g.,* Waiver Petition Docket Number FRA–2010–0158) and may be submitted by any of the following methods:

- *Web site: http://www.regulations.gov*. Follow the online instructions for submitting comments.
- *Fax:* 202–493–2251.
- *Mail:* Docket Operations Facility, U.S. Department of Transportation, 1200 New Jersey Avenue, SE., W12–140, Washington, DC 20590.
- *Hand Delivery:* 1200 New Jersey Avenue, SE., Room W12–140, Washington, DC 20590, between 9 a.m. and 5 p.m., Monday through Friday, except Federal holidays.

Communications received within 45 days of the date of this notice will be considered by FRA before final action is taken. Comments received after that date will be considered as far as practicable. All written communications concerning these proceedings are available for examination during regular business hours (9 a.m.–5 p.m.) at the above facility. All documents in the public docket are also available for inspection and copying on the Internet at the docket facility's Web site at *http://www.regulations.gov*.

Anyone is able to search the electronic form of any written communications and comments received into any of our dockets by the name of the individual submitting the document (or signing the document, if submitted on behalf of an association, business, labor union, etc.). You may review DOT's complete Privacy Act Statement in the **Federal Register** published on April 11, 2000 (Volume 65, Number 70; Page 19477) or at *http://www.dot.gov/privacy.html*.

Issued in Washington, DC on December 3, 2010.

Robert C. Lauby,

Deputy Associate Administrator for Regulatory and Legislative Operations.

[FR Doc. 2010–30910 Filed 12–8–10; 8:45 am]

BILLING CODE 4910–06–P

DEPARTMENT OF TRANSPORTATION

Federal Railroad Administration

Petition for Waiver of Compliance

In accordance with Title 49 Code of Federal Regulations (CFR) part 211, notice is hereby given that the Federal Railroad Administration (FRA) has received a request for a waiver of compliance from certain requirements of its safety standards. The individual petition is described below, including the party seeking relief, the regulatory provisions involved, the nature of the relief being requested, and the petitioner's arguments in favor of relief.

Roger W. Stabler and Gloria J. Stabler

[Waiver Petition Docket Number FRA–2010–0153]

The owners, Mr. Roger W. Stabler and Ms. Gloria J. Stabler (the Stablers), a private partnership in Woodland in the State of California, have petitioned FRA for a permanent waiver of compliance, for one private passenger car (Two Rivers), from the requirements of 49 CFR Part 223, Safety Glazing Standards, which requires certified glazing in all windows.

The passenger car, Two Rivers, was built by Pullman Standard in 1948, and does not have glazing material that meets the provisions of 49 CFR 223.15, *Requirements for existing passenger cars,* for certified glazing in the 23 side-facing windows (including windows in the end vestibule doors). There are no end-facing windows in this car.

The Two Rivers car is interchanged with the general system of railroads, moved short distances over freight railroads for storage when not in use, and occasionally operated behind Amtrak passenger trains. Also, the Two Rivers car is occasionally used in special trains made up of similarly owned passenger cars being operated for the pleasure of the owner and affiliated members of the American Association of

Private Rail Car Owners and/or Railroad Passenger Car Alliance, invited guests, and paying passengers (providing an opportunity for passenger travel of a bygone era). The main operations occur over scenic, long-distance routes through rural countryside (outside high-risk, dense urban areas), which are low-risk areas for window damage or breakage. The car is operated at a maximum track speed as authorized by the railroad controlling movement, and is certified by Amtrak to operate at 110 mph. Typically, these operations amount to about 4,000 miles each year.

The Stablers state that the passenger car is equipped with dual-pane automotive style laminated safety glass, which, in addition to providing a thermal insulation benefit, protects occupants from injury caused by the likelihood of a projectile striking the outer pane but not penetrating the inner pane. They also state that there have not been any reports of injury to occupants of this car for the last 20 years. Since the 1996 ownership by the Stablers, there have not been any accidents/incidents attributed to glazing in this car. The owners further state that they maintain the car to Amtrak standards or to a standard required by the operating railroad.

Additionally, the Stablers have a current and feasible emergency egress plan for the car that consists of the following: (1) The two end doors are always unlocked when the car is in motion; (2) each bedroom is equipped with a hammer and flashlight (the hammers, specifically designed to break glass, are located next to each window; (3) the general lounge area is equipped with a 6-pound sledge hammer, a 3-foot pry bar, a Pullman bi-metal saw, and an axe stored in a labelled emergency tool holder, which is located in the entryway hallway; (4) the car is equipped with four fire extinguishers (two mounted and one located at each end of the car), and two first-aid kits; (5) the car is equipped, at all times, with a two-way radio for communication with the train crew, as well as a cell phone; and (6) all arriving passengers are given a safety briefing on the location and basic operation of breakout tools, fire extinguishers, and first-aid kits.

The Stablers request that the certified glazing requirements be waived for the Two Rivers passenger car at this time due to the accident and vandalism free history, the long-distance routes through rural countryside, and the prohibitive cost to replace the side windows. The Stablers agree to replace any glazing presently installed on the car with FRA-compliant safety glazing in the event that the same is either cracked or broken, or reaches the end of its service life (i.e., scratched, polycarbonate, etc.).

Interested parties are invited to participate in these proceedings by submitting written views, data, or comments. FRA does not anticipate scheduling a public hearing in connection with these proceedings since the facts do not appear to warrant a hearing. If any interested party desires an opportunity for oral comment, they should notify FRA, in writing, before the end of the comment period and specify the basis for their request.

All communications concerning these proceedings should identify the appropriate docket number (*e.g.,* Waiver Petition Docket Number FRA–2010–0153) and may be submitted by any of the following methods:

- *Web site: http://www.regulations.gov.* Follow the online instructions for submitting comments.
- *Fax:* 202–493–2251.
- *Mail:* Docket Operations Facility, U.S. Department of Transportation, 1200 New Jersey Avenue, SE., W12–140, Washington, DC 20590.
- *Hand Delivery:* 1200 New Jersey Avenue, SE., Room W12–140, Washington, DC 20590, between 9 a.m. and 5 p.m., Monday through Friday, except Federal holidays.

Communications received within 45 days of the date of this notice will be considered by FRA before final action is taken. Comments received after that date will be considered as far as practicable. All written communications concerning these proceedings are available for examination during regular business hours (9 a.m.–5 p.m.) at the above facility. All documents in the public docket are also available for inspection and copying on the Internet at the docket facility's Web site at *http://www.regulations.gov.*

Anyone is able to search the electronic form of any written communications and comments received into any of our dockets by the name of the individual submitting the comment (or signing the comment, if submitted on behalf of an association, business, labor union, etc.). You may review DOT's complete Privacy Act Statement in the **Federal Register** published on April 11, 2000 (Volume 65, Number 70; Page 19477–78) or at *http://www.dot.gov/privacy.html.*

Issued in Washington, DC on December 3, 2010.

Michael J. Logue,

Deputy Associate Administrator for Safety Compliance and Program Implementation.

[FR Doc. 2010–30911 Filed 12–8–10; 8:45 am]

BILLING CODE 4910–06–P

DEPARTMENT OF TRANSPORTATION

National Highway Traffic Safety Administration

[U.S. DOT Docket No. NHTSA–2010–0157]

Reports, Forms, and Record Keeping Requirements

AGENCY: National Highway Traffic Safety Administration, DOT.

ACTION: Request for public comment on proposed revision of the previously approved collection of information, OMB #2127–0646.

SUMMARY: Before a Federal agency can collect certain information from the public, it must receive approval from the Office of Management and Budget (OMB). Under procedures established by the Paperwork Reduction Act of 1995, before seeking OMB approval, Federal agencies must solicit public comment on proposed collections of information, including extensions and reinstatements of previously approved collections.

This document describes the collection of information for which NHTSA intends to seek OMB approval.

DATES: Comments must be received on or before February 7, 2011.

ADDRESSES: You may submit comments identified by DOT Docket ID Number NHTSA–2010–0157 using any of the following methods:

Electronic submissions: Go to *http://www.regulations.gov.* Follow the on-line instructions for submitting comments.

Mail: Docket Management Facility, M–30, U.S. Department of Transportation, 1200 New Jersey Avenue, SE., West Building Ground Floor, Room W12–140, Washington, DC 20590.

Hand Delivery: West Building Ground Floor, Room W12–140, 1200 New Jersey Avenue, SE., Washington, DC, between 9 a.m. and 5 p.m., Monday through Friday, except Federal holidays.

Fax: 1–202–493–2251.

Instructions: Each submission must include the Agency name and the Docket number for this Notice. Note that all comments received will be posted without change to *http://www.regulations.gov* including any personal information provided.

FOR FURTHER INFORMATION CONTACT: Mr. Alan Block, Contracting Officer's Technical Representative, Office of Behavioral Safety Research (NTI–131), National Highway Traffic Safety Administration, 1200 New Jersey Avenue, SE., W46–499, Washington, DC 20590. Mr. Block's phone number is 202–366–6401 and his e-mail address is *alan.block@dot.gov.*

SUPPLEMENTARY INFORMATION: Under the Paperwork Reduction Act of 1995, before an agency submits a proposed collection of information to OMB for approval, it must publish a document in the **Federal Register** providing a 60-day comment period and otherwise consult with members of the public and affected agencies concerning each proposed collection of information. The OMB has promulgated regulations describing what must be included in such a document. Under OMB's regulations (at 5 CFR 1320.8(d)), an agency must ask for public comment on the following:

(i) Whether the proposed collection of information is necessary for the proper performance of the functions of the agency, including whether the information will have practical utility;

(ii) the accuracy of the agency's estimate of the burden of the proposed collection of information, including the validity of the methodology and assumptions used;

(iii) how to enhance the quality, utility, and clarity of the information to be collected; and

(iv) how to minimize the burden of the collection of information on those who are to respond, including the use of appropriate automated, electronic, mechanical, or other technological collection techniques or other forms of information technology, *e.g.,* permitting electronic submission of responses.

In compliance with these requirements, NHTSA asks public comment on the following proposed revision of the previously approved collection of information, OMB #2127–0646:

Evaluation Surveys for Impaired Driving and Seat Belt Interventions

Type of Request—Revision of the previously approved collection of information.

OMB Clearance Number—2127–0646.

Form Number—NHTSA 1010, NHTSA 1011.

Requested Expiration Date of Approval—3 years from date of approval.

Summary of the Collection of Information—The National Highway Traffic Safety Administration (NHTSA) proposes to conduct telephone surveys to evaluate interventions designed to increase seat belt use and reduce alcohol-impaired driving. Sample sizes would range from 200 to 2000 depending on the geographic unit being surveyed (Nation, Region, State, Community) and the evaluation design for the intervention (*e.g.,* number of analytic groups). Interview length would be 10 minutes. The surveys would collect information on attitudes, awareness, knowledge, and behavior related to the intervention. The surveys would follow a pre-post design where they are administered prior to the implementation of the intervention and after its conclusion. Interim survey waves may also be administered if the duration of the intervention permits.

In conducting the proposed surveys, the interviewers would use computer-assisted telephone interviewing to reduce interview length and minimize recording errors. The proposed surveys would be anonymous.

Description of the Need for the Information and Proposed Use of the Information—NHTSA was established to reduce the number of deaths, injuries, and economic losses resulting from motor vehicle crashes on the Nation's highways. As part of this statutory mandate, NHTSA is authorized to conduct research as a foundation for the development of motor vehicle standards and traffic safety programs.

The heavy toll that alcohol-impaired driving exacts on the nation in fatalities, injuries, and economic costs is well documented. In addition, non-use of seat belts continues to contribute significantly to the number of traffic fatalities. The persistence of these traffic safety problems points to an ongoing need for effective interventions to address alcohol-impaired driving and non-use of seat belts. This in turn calls for strong evaluation efforts to identify what interventions are effective.

The Safe, Accountable, Flexible, Efficient Transportation Equity Act: A Legacy For Users (SAFETEA–LU) is a funding and authorization bill that governs United States federal Surface Transportation spending. Signed into law in 2005, sections within the law have stimulated heightened program activity to reduce alcohol-impaired driving and increase seat belt use. Under section 410 of SAFETEA–LU, spending authority for State grants to implement alcohol-impaired driving countermeasures rose from slightly under $40 million in 2005 to $139 million in 2009. To be eligible for the grants, States had to carry out a specified number of programs from the following list: Statewide checkpoints and/or saturation patrols, prosecution and adjudication outreach programs, increased rate of BAC testing of drivers in fatal crashes, stronger sanctions for high-risk drivers with BACs of 0.15 percent or more, effective alcohol rehabilitation for repeat offenders or a program to refer them to DWI courts, underage drinking prevention programs, administrative license suspension or revocation for DUI, and self-sustaining impaired driving prevention programs. Section 406 of SAFETEA–LU set the funding authority for State seat belt performance grants at $124.5 million per year between 2006 and 2009. States were eligible for the grants based on specified seat belt performance criteria. Under Section 405 of SAFETEA–LU, funding authority for State occupant protection incentive grants increased from $19.84 million in 2005 to $25 million in 2009. Grant eligibility was based on specified criteria regarding the presence of occupant protection programs, laws, and associated penalties for violation. Use of grant funds was restricted to implementing and enforcing occupant protection programs. Section 2009 of SAFETEA–LU established a new program to administer at least 2 high visibility enforcement programs to increase seat belt use and/or reduce alcohol-impaired or drug-impaired driving. Grant funds could be used for the development, production, and use of broadcast and print media in carrying out traffic safety law enforcement campaigns.

Funding of these programs has continued with extension of SAFETEA–LU into fiscal years 2010 and 2011. NHTSA needs to be prepared for inclusion of the programs in the upcoming Surface Transportation Reauthorization. This means maintaining a strong evaluation program that monitors the effectiveness of intervention models being implemented under this funded intervention activity, and identifies where changes are needed. Telephone surveys have been an important component in NHTSA's evaluation activity. They have been used to measure public awareness of intervention campaigns, penetration of campaign messages, and perceived risk of negative consequences from engaging in proscribed behavior. The surveys have typically followed a pre-post design, where differences between an initial baseline survey wave and a later survey wave were associated with an intervening intervention. NHTSA has found such surveys to be valuable in assessing the multi-million dollar national media campaigns conducted for the National Alcohol Crackdowns and the National Click It or Ticket Mobilizations. They also have been useful in evaluating localized programs that tested variants of intervention models by providing information to assess campaign communications or interpret collected behavioral measures. With seat belt and impaired driving intervention activity anticipated to remain heavy for the foreseeable future, there is a need for NHTSA to continue to apply these data collection

techniques to see if the campaigns are achieving their objectives.

Description of the Likely Respondents (Including Estimated Number, and Proposed Frequency of Response to the Collection of Information)—Over the next 3 years, NHTSA intends to conduct National telephone surveys to collect data from 36,000 participants. For the National Alcohol Crackdown, 2 sets of pre/post intervention surveys, each with sample sizes of 1,500, will be administered annually for 3 years. Similarly, for the National Click It or Ticket Mobilization, 2 sets of pre/post intervention surveys, each with sample sizes of 1,500, will be administered annually for 3 years.

In conducting one or more of the National surveys, NHTSA may have a need to collect information to assess localized activity associated with the National Alcohol Crackdown or National Click It or Ticket Mobilization. This would involve augmentation of the pre- and post-national sample with one or more Regional, State, or Community samples. These samples will range from 200 to 2,000. Typically they will be approximately 500. NHTSA intends to complete a maximum of 24,000 of these localized interviews over the next three years.

In addition to the surveys associated with the National Alcohol Crackdown and National Click It or Ticket Mobilization, NHTSA intends to conduct telephone surveys to assess selected demonstrations of interventions designed to reduce alcohol-impaired driving and/or increase seat belt use. The surveys will follow a pre-post design. Interventions sustained over an extended period of time may add one or more interim survey waves. Typically, a State demonstration survey will require 500 participants per survey wave. A regional demonstration can range from as few as 200 participants for a small county to 2,000 participants for a Region covering more than one State. NHTSA intends to complete a maximum of 40,800 of these interviews over the next three years.

Interviews will be conducted with persons at residential phone numbers selected using random digit dialing. For interviews conducted with persons using landline phones, no more than one respondent per household will be selected. For interviews conducted with persons on cell phones, a single user of the cell phone will be selected. Each sample member will complete just one interview. Businesses are ineligible for the sample and would not be interviewed.

Estimate of the Total Annual Reporting and Record Keeping Burden Resulting from the Collection of Information—NHTSA estimates that respondents in the sample would require an average of 10 minutes to complete the telephone interviews. The annual estimated reporting burden on the general public for the National surveys would be a maximum of 2,000 hours to conduct 12,000 interviews. Over the requested three year period, this would be 6,000 hours to conduct 36,000 interviews. The annual estimated reporting burden on the general public for the localized Crackdown and Mobilization surveys would be a maximum of 1,333.33 hours to conduct 8,000 interviews. Over the requested three year period, this would be 4,000 hours to conduct 24,000 interviews. The annual estimated reporting burden on the general public for the demonstration project surveys would be a maximum of 2,266.67 hours to conduct 13,600 interviews. Over the requested three year period, this would be 6,800 hours to conduct 40,800 interviews. In total, the annual estimated reporting burden on the public would be a maximum of 5,600 hours to conduct 33,600 interviews. Over the requested three year period this would be 16,800 hours to conduct 100,800 interviews. The respondents would not incur any reporting cost from the information collection. The respondents also would not incur any record keeping burden or record keeping cost from the information collection.

Authority: 44 U.S.C. Section 3506(c)(2)(A)

Jeffrey Michael,

Associate Administrator, Research and Program Development.

[FR Doc. 2010–30975 Filed 12–8–10; 8:45 am]

BILLING CODE 4910–59–P

DEPARTMENT OF TRANSPORTATION

National Highway Traffic Safety Administration

Reports, Forms, and Record Keeping Requirements; Agency Information Collection Activity Under OMB Review

AGENCY: National Highway Traffic Safety Administration (NHTSA), DOT.

ACTION: Notice.

SUMMARY: In compliance with the Paperwork Reduction Act of 1995 (44 U.S.C. 3501 et seq.), this notice announces that the Information Collection Request (ICR) abstracted below is being forwarded to the Office of Management and Budget (OMB) for review and comment. The ICR describes the nature of the information collection and the expected burden. The **Federal Register** Notice with a 60-day comment period was published on September 13, 2010 (75 FR 55629–55630).

DATES: Comments must be submitted on or before [insert date 30 days after publication].

ADDRESSES: Send comments, within 30 days, to the Office of Information and Regulatory Affairs, Office of Management and Budget, 725–17th Street, NW., Washington, DC 20503, Attention NHTSA Desk Officer.

FOR FURTHER INFORMATION CONTACT: Randolph Atkins, Ph.D., Office of Behavioral Safety Research, National Highway Traffic Safety Administration, NTI–131, Room W46–500, 1200 New Jersey Ave., SE., Washington, DC 20590. Dr. Atkins' phone number is 202–366–5597 and his e-mail address is *randolph.atkins@dot.gov.*

SUPPLEMENTARY INFORMATION:

Title: National Survey of Speeding Attitudes and Behavior: 2010.

Type of Request: New information collection requirement.

Abstract: Data from previous studies by the National Highway Traffic Safety Administration (NHTSA) has shown that 31 percent of all fatal crashes are directly traceable to excessive speed. In 2008, 11,674 people died in excessive speed-related crashes. The cost of these crashes is approximately 40 billion dollars per year. Surveys of drivers' attitudes toward speeding have demonstrated a strong correlation between drivers' attitudes towards speeding and other driving behaviors and actual traffic outcomes. Models based on self-reported measures of intentions and attitudes are used to predict traffic behaviors and design interventions to reduce speeding and other hazardous traffic actions. Some of these models stress the importance of attitude, habits and the interaction of habit with intention.

NHTSA proposes to conduct a 2010 National Survey of Speeding Attitudes and Behavior by telephone among a sample of 6,000 adults (age 16 and older). NHTSA's information needs require a telephone survey of a national probability sample of drivers in the United States that will provide insight into why drivers speed and which methods of enforcement would discourage them from speeding. The questionnaire will contain items on the extent to which drivers speed, demographic and typological descriptions of speeders, locations and times when speeding is most frequent, attitudes and perceptions about speeding, reasons and motivations for speeding, knowledge of measures to

deter speeding, attitudes towards measures to deter speeding, and correlates of speeding behavior. In conducting the proposed survey, the interviewers would use computer-assisted telephone interviewing to reduce interview length and minimize recording errors. A Spanish-language translation and bilingual interviewers would be used to minimize language barriers to participation. The proposed survey is the third in the series, which began in 1997. The 2010 survey will repeat many questions from previous surveys in order to monitor changes over time, and will also include new questions on emerging speed-related technologies.

Affected Public: Randomly selected members of the general public age 16 and older, including those in landline telephone households as well as those who primarily or exclusively use a cellular phone. Participation by all respondents would be voluntary and anonymous.

Estimated Total Annual Burden: 2,005 hours (15 pretest interviews averaging 20 minutes per interview, followed by 6,000 interviews administered to the final survey sample averaging 20 minutes per interview).

Comments are invited on the following:

(i) Whether the proposed collection of information is necessary for the proper performance of the functions of the agency, including whether the information will have practical utility;

(ii) the accuracy of the agency's estimate of the burden of the proposed information collection;

(iii) ways to enhance the quality, utility, and clarity of the information to be collected; and

(iv) ways to minimize the burden of the collection of information on respondents, including the use of automated collection techniques or other forms of information technology.

A comment to OMB is most effective if OMB receives it within 30 days of publication.

Authority: 44 U.S.C. Section 3506(c)(2)(A).

Jeff Michael,

Associate Administrator, Research and Program Development.

[FR Doc. 2010–31004 Filed 12–8–10; 8:45 am]

BILLING CODE 4910–59–P

DEPARTMENT OF VETERANS AFFAIRS

Privacy Act of 1974; System of Records

AGENCY: Department of Veterans Affairs (VA).

ACTION: Notice of Establishment of New System of Records.

SUMMARY: The Privacy Act of 1974, (5 U.S.C. 552a(e)(4)), requires that all agencies publish in the **Federal Register** a notice of the existence and character of their systems of records. Notice is hereby given that the Department of Veterans Affairs (VA) is establishing a new electronic system of records entitled "Veterans Tracking Application (VTA)–VA" (163VA005Q3).

DATES: Comments on this new system of records must be received no later than January 10, 2011. If no public comment is received, the new system will become effective January 10, 2011.

ADDRESSES: Written comments may be submitted through *http://www.Regulations.gov*; by mail or hand-delivery to Director, Regulations Management (02REG), Department of Veterans Affairs, 810 Vermont Avenue, NW., Room 1063B, Washington, DC 20420; or by fax to (202) 273–9026. Comments received will be available for public inspection in the Office of Regulation Policy and Management, Room 1063B, between the hours of 8 a.m. and 4:30 p.m., Monday through Friday (except holidays). Please call (202) 461–4902 for an appointment. In addition, during the comment period, comments may be viewed online through the Federal Docket Management System (FDMS) at *http://www.Regulations.gov.*

FOR FURTHER INFORMATION CONTACT: Louise Rodebush, VTA Program Manager (005Q), Department of Veterans Affairs, 810 Vermont Avenue, NW., Washington, DC 20420; telephone (216) 849–0193.

SUPPLEMENTARY INFORMATION:

I. Description of Proposed System of Records

The Veterans Tracking Application (VTA) and associated database supports both the Veterans Health Administration (VHA) and the Veterans Benefits Administration (VBA) branches of the Department of Veterans Affairs (VA). VTA provides the VA tracking information on members of the armed forces who will be transferred from a Department of Defense (DoD) Military Treatment Facility (MTF) to a VA health facility in the future or who already have Veteran status. The VTA provides tracking of the Servicemember's arrival at the initial VA health facility and provides date and location information for subsequent transfers to other health facilities. In addition, VTA obtains data about patient history from the imported DoD Theater Medical Data Store (TMDS). In addition to the Veteran patient population, VTA records benefit tracking information for all severely injured Veterans requesting benefits. This history includes all benefit award details to include application dates, award decisions, dates and amounts. VTA also tracks Servicemembers and Veterans disability claims through the Disability Eligibility System (DES) pilot module. The purpose of VTA is to track the initial arrival of a Servicemember into the VA health system and their subsequent movement among VA health facilities, as well as monitor benefits application and administration details.

II. Proposed Routine Use Disclosures of Data in the System

1. The record of an individual included in this system may be provided to DoD systems or offices for use in connection with matters relating to one of DoD's programs to enable delivery of healthcare or other DoD benefits to eligible beneficiaries.

2. The name, address, VA file number, effective date of compensation or pension, current and historical benefit pay amounts for compensation or pension, service information, date of birth, competency payment status, incarceration status, and social security number of veterans and their dependants may be disclosed to the approved VA and DoD office/systems to reconcile the disability claims, benefits awards, and patient data.

3. The name(s) and address(es) of a Veteran may be disclosed to another Federal agency or to a contractor of that agency, at the written request of the head of that agency or designee of the head of that agency for the purpose of conducting government research necessary to accomplish a statutory purpose of that agency.

4. VA may disclose on its own initiative any information in this system, except the names and addresses of Veterans and their dependents that is relevant to a suspected or reasonably imminent violation of law, whether civil, criminal, or regulatory in nature and whether arising by general or program statute or by regulation, rule, or order issued pursuant thereto, a Federal, State, local, tribal, or foreign agency charged with the responsibility of investigating or prosecuting such violation, or charged with enforcing or implementing the statute, regulation, rule, or order. VA may also disclose on its own initiative the names and addresses of Veterans and their dependents to a Federal agency charged with the responsibility of investigating or prosecuting civil, criminal, or regulatory violations of law, or charged

with enforcing or implementing the statute, regulation, rule, or order issued pursuant thereto.

5. VA may disclose information in the system of records to the Department of Justice (DOJ), either on VA's initiative or in response to DOJ's request for the information, after either VA or DOJ determines that such information is relevant to DOJ's representation of the United States or any of its components in legal proceeding before a court or adjudicative body provided that, in each case, the agency also determines prior to disclosure that release of records to the DOJ is a use of information contained in the records that is compatible with the purpose for which VA collected the records. VA, on its own initiative, may disclose records in this system of records in legal proceedings before a court or administrative body after determining that the disclosure of the records to the court or administrative body is a use of the information contained in the records that is compatible with the purpose for which VA collected the records.

6. VA may disclose information to assist a person or entity responsible for the licensing, supervision, or professional discipline of the person or organization. Names and home addresses of veterans and their dependents will be released on VA's initiative under this routine use only to Federal entities when VA believes that the names and addresses are required by the Federal department or agency.

7. Disclosure of relevant information may be made to individuals, organizations, private or public agencies, or other entities or individuals with whom VA has a contract or agreement to perform such services as VA may deem practicable for the purposes of laws administered by VA, in order for the contractor, subcontractor or entity or individual with whom VA has an agreement or contract to perform the services of the contract or agreement.

8. VA may on its own initiative disclose information or records to appropriate agencies, entities, and persons when; (1) VA suspects or confirmed that the integrity or confidentiality of information in the system of records has been compromised; (2) VA has determined that as a result of the suspected or confirmed compromise there is a risk of embarrassment or harm to the reputations of the records subjects, harm to economic or property interest, identity theft or fraud, or harm to the security, confidentiality or integrity of this system or other systems or programs (whether maintained by VA or another agency or entity) that rely upon the potentially compromised information and; (3) the disclosure is made to such agencies, entities, and persons whom VA determines are reasonably necessary to assist in or carry out VA's efforts to respond to the suspected or confirmed compromise and prevent, minimize, or remedy such harm. This routine use permits disclosures by VA to respond to a suspected or confirmed data breach, including the conduct of any risk analysis or provision or credit protection services as provided in 38 U.S.C. 5724, as the terms are defined in 38 U.S.C. 5727.

9. Disclosure to other Federal agencies may be made to assist such agencies in preventing and detecting possible fraud or abuse by individuals in their operations and programs.

10. The record of an individual who is covered by a system of records may be disclosed to a Member of Congress, or a staff person acting for the Member, when the Member or staff person requests the record on behalf of and at the written request of the individual.

11. Disclosure may be made to the National Archives and Records Administration (NARA) or the General Services Administration (GSA) in records management inspections conducted under authority of Chapter 29 of Title 44 United States Code.

12. Any information in this system of records may be disclosed, in the course of presenting evidence in or to a court, magistrate, administrative tribunal, or grand jury, including disclosures to opposing counsel in the course of such proceedings or in settlement negotiations.

III. Compatibility of the Proposed Routine Uses

The notice of intent to publish an advance copy of the system notice has been sent to the appropriate Congressional committees and to the Director of the Office of Management and Budget (OMB) as required by 5 U.S.C. Section 552a(r) (Privacy Act) and guidelines issued by OMB (65 FR 77677), December 12, 2000.

Approved: November 16, 2010.

John R. Gingrich,

Chief of Staff, Department of Veterans Affairs.

SYSTEM NAME:

"Veterans Tracking Application (VTA)–VA" (163VA005Q3)

SYSTEM LOCATION:

The VTA system containing its associated records is maintained at the Austin Information Technology Center (AITC) at 1615 East Woodward Street, Austin, Texas 78772. A second VTA database with an identical set of records is being established as a disaster recovery site at the Hines Information Technology Center (Hines ITC) at Hines, Illinois. All records are maintained electronically.

CATEGORIES OF INDIVIDUALS COVERED BY THE SYSTEM:

The category of the individuals covered by the VTA database encompasses Veterans and Servicemembers. This would include current and separated Servicemembers and their dependents as well as Veterans whose VA military service benefits have been sought by survivors (*e.g.,* burial benefits).

CATEGORIES OF RECORDS IN THE SYSTEM:

The record, or information contained in the record, may include identifying information (*e.g.,* name, contact information, social security number), association to dependents, cross reference to other names used, military service participation and status information (branch of service, rank, enter on duty date, release from active duty date, military occupations, type of duty), reason and nature of active duty separation (completion of commitment, disability, hardship, etc.), combat/environmental exposures (combat pay, combat awards, theater location), combat deployments (period of deployment, location/country), Guard/Reserve activations (type of activation), military casualty/disabilities (line of duty death, physical examination board status, serious/very serious injury status, recovery plans, Department of Defense (DoD) rated disabilities, benefit participation, eligibility and usage, and VA compensation (rating, award amount).

AUTHORITY FOR MAINTENANCE OF THE SYSTEM:

The authority for maintaining this system is Title 38 U.S.C. Section 5106.

PURPOSE:

The Veterans Tracking Application (VTA) and associated database supports both the Veterans Health Administration (VHA) and the Veterans Benefits Administration (VBA) branches of the Department of Veterans Affairs (VA). VTA provides VA tracking information on members of the armed forces who will be transferred from a Department of Defense (DoD) Military Treatment Facility (MTF) to a VA health facility in the future or who already have Veteran status. The VTA provides tracking of the Servicemember's arrival at the initial VA health facility and provides date and location information for subsequent transfers to other health

facilities. In addition, VTA obtains patient history data from the imported DoD Theater Medical Data Store (TMDS). In addition to the Veteran patient population, VTA records benefit tracking information for all severely injured Veterans requesting benefits. This history includes all benefit award details to include application dates, award decisions, dates and amounts. VTA also tracks Servicemembers and Veterans disability claims through the Disability Eligibility System (DES) pilot module. The purpose of the VTA is to track the initial arrival of a Servicemember into the VA health system and their subsequent movement among VA health facilities, as well as monitor benefits application and administration details.

ROUTINE USES OF RECORDS MAINTAINED IN THE SYSTEM, INCLUDING CATEGORIES OF USERS AND THE PURPOSES OF SUCH USES:

1. The record of an individual included in this system may be provided to DoD systems or offices for use in connection with matters relating to one of DoD's programs to enable delivery of healthcare or other DoD benefits to eligible beneficiaries, or for the purpose of tracking Active Duty Servicemembers.

2. The name, address, VA file number, effective date of compensation or pension, current and historical benefit pay amounts for compensation or pension, service information, date of birth, competency payment status, incarceration status, and social security number of Veterans and their dependants and survivors may be disclosed to the approved VA and DoD office/systems to reconcile the disability claims, benefits awards, and coordinating services.

3. The name(s) and address(es) of a Veteran may be disclosed to another Federal agency or to a contractor of that agency, at the written request of the head of that agency or designee of the head of that agency for the purpose of conducting government research necessary to accomplish a statutory purpose of that agency.

4. VA may disclose on its own initiative any information in this system, except the names and addresses of Veterans and their dependents, that is relevant to a suspected or reasonably imminent violation of law, whether civil, criminal, or regulatory in nature and whether arising by general or program statute or by regulation, rule, or order issued pursuant thereto, a Federal, State, local, tribal, or foreign agency charged with the responsibility of investigating or prosecuting such violation, or charged with enforcing or implementing the statute, regulation, rule, or order. VA may also disclose on its own initiative the names and addresses of Veterans and their dependents to a Federal agency charged with the responsibility of investigating or prosecuting civil, criminal, or regulatory violations of law, or charged with enforcing or implementing the statute, regulation, rule, or order issued pursuant thereto.

5. VA may disclose information in the system of records to the Department of Justice (DOJ), either VA's initiative or in response to DOJ's request for the information, after either VA or DOJ determines that such information is relevant to DOJ's representation of the United States or any of its components in legal proceeding before a court or adjudicative body, provided that, in each case, the agency also determines prior to disclosure that release of records to the DOJ is a use of information contained in the records that is compatible with the purpose for which VA collected the records. VA, on its own initiative, may disclose records in this system of records in legal proceedings before a court or administrative body after determining that the disclosure of the records to the court or administrative body is a use of the information contained in the records that is compatible with the purpose for which VA collected the records.

6. VA may disclose information to assist a person or entity responsible for the licensing, supervision, or professional discipline of the person or organization. Names and home addresses of Veterans and their dependents will be released on VA's initiative under this routine use only to Federal entities when VA believes that the names and addresses are required by the Federal department or agency.

7. Disclosure of relevant information may be made to individuals, organizations, private or public agencies, or other entities or individuals with whom VA has a contract or agreement to perform such services as VA may deem practicable for the purposes of laws administered by VA, in order for the contractor, subcontractor or entity or individual with whom VA has an agreement or contract to perform the services of the contract or agreement.

8. VA may on its own initiative disclose information or records to appropriate agencies, entities, and persons when (1) VA suspects or confirms that the integrity or confidentiality of information in the system of records has been compromised; (2) VA has determined that as a result of the suspected or confirmed compromise there is a risk of embarrassment or harm to the reputations of the records' subjects, harm to economic or property interest, identity theft or fraud, or harm to the security, confidentiality or integrity of this system or other systems or programs (whether maintained by VA or another agency or entity) that rely upon the potentially compromised information and; (3) the disclosure is made to such agencies, entities, and persons whom VA determines are reasonably necessary to assist in or carry out VA's efforts to respond to the suspected or confirmed compromise and prevent, minimize, or remedy such harm; (4) VA may provide access to the documents in this SOR when a written request is approved and authorized; (5) VA may consider individuals contesting the use of content share with other agencies when submitted in writing. This routine use permits disclosures by VA to respond to a suspected or confirmed data breach, including the conduct of any risk analysis or provision of credit protection services as provided in 38 U.S.C. Section 5724, as the terms are defined in 38 U.S.C. Section 5727.

9. Disclosure to other Federal agencies may be made to assist such agencies in preventing and detecting possible fraud or abuse by individuals in their operations and programs.

10. The record of an individual who is covered by a system of records may be disclosed to a Member of Congress, or a staff person acting for the Member, when the Member or staff person requests the record on behalf of and at the written request of the individual.

11. Disclosure may be made to the National Archives and Records Administration (NARA) or the General Services Administration (GSA) in records management inspections conducted under authority of Chapter 29 of Title 44 United States Code.

12. Any information in this system of records may be disclosed, in the course of presenting evidence in or to a court, magistrate, administrative tribunal, or grand jury, including disclosures to opposing counsel in the course of such proceedings or in settlement negotiations.

POLICIES AND PRACTICES FOR STORING, RETRIEVING, ACCESSING, RETAINING, AND DISPOSING OF RECORDS IN THE SYSTEM STORAGE:

STORAGE:

Records are transmitted between approved VA and DoD office/systems and VTA over secure telecommunications (*i.e.*) SFTP, secure Web services) using approved

encryption technologies. Records (or information contained in records) are maintained in electronic format in the VTA database. Information from VTA is disseminated in three ways; (1) approved VA and DoD systems electronically request and receive data from VTA over the internal VA and DoD network; (2) data is provided over the secure telecommunications between VTA and approved VA and DoD office/systems for reconciliation of records; (3) periodic electronic data extracts of subsets of information contained in VTA are provided to approved VA and DoD offices/systems over the internal VA network and DoD network. Backups of VTA data are created regularly and stored in a secure off-site facility.

RETRIEVABILITY:

Records are retrieved by name, claim file number, social security number and date of birth.

SAFEGUARDS:

1. Physical Security: The primary VTA system is located in the AITC and the backup disaster recovery system is located in the Hines ITC. Access to data processing centers is generally restricted to center employees, custodial personnel, Federal Protective Service and other security personnel. Access to computer rooms is restricted to authorized operational personnel through electronic locking devices. All other persons needing access to computer rooms are escorted.

2. System Security: Access to the VA network is protected by the usage of "logon" identifications and passwords. Once on the VA network, separate ID and password credentials are required to gain access to the VTA server and/or database. Access to the server and/or database is granted to only a limited number of system administrators and database administrators. In addition, VTA has undergone certification and accreditation. Users of VTA access the system via the approved Veterans Information Portal (VIP). Users must register first through the VIP Portal and obtain a username and password. Upon approval of a VIP account, they may request access to VTA through an electronic form accessible via VIP. Based on information entered during the VTA registration process, they will be designated a role which determines their access within VTA. Based on a risk assessment that followed The National Institute of Standards and Technology (NIST), Vulnerability and Threat Guidelines, the system is considered stable and operational and a final Authority to Operate has been granted. The system was found to be operationally secure with very few exceptions or recommendations for change.

RETENTION AND DISPOSAL:

VA retains selected information for purposes of making eligibility determinations for VA benefits. The information retained may be included in the VA records that are maintained and disposed of in accordance with the appropriate record disposition authority approved by the Archivist of the United States.

SYSTEM MANAGER(S) AND ADDRESSES:

The official responsible for maintaining the VTA system is: Program Manager Louise Rodebush, Veterans Relationship Management Program Executive Office (005Q), *Attn:* VTA System of Records, 810 Vermont Avenue, NW., Washington, DC 20420.

NOTIFICATION PROCEDURES:

Individuals seeking information on the existence and content of a record pertaining to them should contact the system manager, in writing, at the above address. Requests should contain the full name, address and telephone number of the individual making the inquiry.

RECORD ACCESS PROCEDURE:

(*See* notification procedure above).

CONTESTING RECORD PROCEDURES:

(*See* notification procedure above).

RECORD SOURCE CATEGORIES:

Information in this system of records is provided by components of the Department of Defense and Department of Veterans Affairs.

[FR Doc. 2010–30907 Filed 12–8–10; 8:45 am]

BILLING CODE 5320–01–P

Federal Register

Thursday,
December 9, 2010

Part II

Environmental Protection Agency

40 CFR Part 80

Regulation of Fuels and Fuel Additives: 2011 Renewable Fuel Standards; Final Rule

ENVIRONMENTAL PROTECTION AGENCY

40 CFR Part 80

[EPA–HQ–OAR–2010–0133; FRL–9234–6]

RIN 2060–AQ16

Regulation of Fuels and Fuel Additives: 2011 Renewable Fuel Standards

AGENCY: Environmental Protection Agency (EPA).

ACTION: Final rule.

SUMMARY: The Environmental Protection Agency is required to set the renewable fuel standards each November for the following year based on gasoline and diesel projections from the Energy Information Administration (EIA). Additionally, EPA is required to set the cellulosic biofuel standard each year based on the volume projected to be available during the following year, if the projected volume is less than the applicable volume provided in the statute. These cellulosic biofuel volume projections are to be based in part on EIA projections as well as assessments of production capability from industry. This action establishes annual percentage standards under Clean Air Act section 211(o) for cellulosic biofuel, biomass-based diesel, advanced biofuel, and renewable fuels that apply to all gasoline and diesel produced or imported in calendar year 2011. We have determined that the applicable volume of cellulosic biofuel on which the percentage standard should be based is 6.0 million ethanol-equivalent gallons. We believe that available volumes of cellulosic biofuel could be significantly higher in 2012. This action also finalizes two changes to the Renewable Fuel Standard program regulations: modifications to the delayed RINs provision which provides a temporary and limited means for certain renewable fuel producers to generate RINs after they have produced and sold renewable fuel, and a new process for parties to petition EPA to authorize use of an aggregate approach to compliance with the renewable biomass provision for foreign feedstocks akin to that applicable to the U.S. Finally, this action makes two administrative announcements, one regarding the price for cellulosic biofuel waiver credits for 2011, and another regarding the status of the aggregate compliance provision for domestic crops.

DATES: This final rule is effective on December 9, 2010.

ADDRESSES: EPA has established a docket for this action under Docket ID No. EPA–HQ–OAR–2010–0133. All documents in the docket are listed on the www.regulations.gov website. Although listed in the index, some information is not publicly available, e.g., CBI or other information whose disclosure is restricted by statute. Certain other material, such as copyrighted material, will be publicly available only in hard copy. Publicly available docket materials are available either electronically through www.regulations.gov or in hard copy at the Air and Radiation Docket and Information Center, EPA/DC, EPA West, Room 3334, 1301 Constitution Ave., NW., Washington, DC. The Public Reading Room is open from 8:30 a.m. to 4:30 p.m., Monday through Friday, excluding legal holidays. The telephone number for the Public Reading Room is (202) 566–1744, and the telephone number for the Air Docket is (202) 566–1742.

FOR FURTHER INFORMATION CONTACT: Julia MacAllister, Office of Transportation and Air Quality, Assessment and Standards Division, Environmental Protection Agency, 2000 Traverwood Drive, Ann Arbor, MI 48105; Telephone number: 734–214–4131; *Fax number:* 734–214–4816; *E-mail address: macallister.julia@epa.gov,* or Assessment and Standards Division Hotline telephone number: (734) 214–4636; *E-mail address: asdinfo@epa.gov.*

SUPPLEMENTARY INFORMATION:

I. General Information

A. Does this action apply to me?

Entities potentially affected by this final rule are those involved with the production, distribution, and sale of transportation fuels, including gasoline and diesel fuel or renewable fuels such as ethanol and biodiesel. Potentially regulated categories include:

Category	NAICS [1] codes	SIC [2] codes	Examples of potentially regulated entities
Industry	324110	2911	Petroleum Refineries.
Industry	325193	2869	Ethyl alcohol manufacturing.
Industry	325199	2869	Other basic organic chemical manufacturing.
Industry	424690	5169	Chemical and allied products merchant wholesalers.
Industry	424710	5171	Petroleum bulk stations and terminals.
Industry	424720	5172	Petroleum and petroleum products merchant wholesalers.
Industry	454319	5989	Other fuel dealers.

[1] North American Industry Classification System (NAICS).
[2] Standard Industrial Classification (SIC) system code.

This table is not intended to be exhaustive, but rather provides a guide for readers regarding entities likely to be regulated by this final action. This table lists the types of entities that EPA is now aware could potentially be regulated by this action. Other types of entities not listed in the table could also be regulated. To determine whether your activities will be regulated by this action, you should carefully examine the applicability criteria in 40 CFR part 80. If you have any questions regarding the applicability of this action to a particular entity, consult the person listed in the preceding section.

Outline of This Preamble

I. Executive Summary
A. Statutory Requirements for Renewable Fuel Volumes
B. Assessment of 2011 Cellulosic Biofuel Production
C. Advanced Biofuel and Total Renewable Fuel
D. Final Percentage Standards
E. 2011 Price for Cellulosic Biofuel Waiver Credits
F. Assessment of the Aggregate Compliance Approach
II. Volume Production and Import Potential for 2011
A. Cellulosic Biofuel
1. Domestic Cellulosic Biofuel
2. Imports of Cellulosic Biofuel
3. Projections From the Energy Information Administration
4. Overall 2011 Volume Projections
5. Projections of Cellulosic Biofuel for 2012
B. Advanced Biofuel and Total Renewable Fuel
C. Biomass-Based Diesel
III. Percentage Standards for 2011
A. Background
B. Calculation of Standards
1. How are the standards calculated?
2. Small Refineries and Small Refiners

IV. Cellulosic Biofuel Technology Assessment
A. What pathways are currently valid for the production of cellulosic biofuel?
B. Cellulosic Feedstocks
C. Emerging Technologies
1. Biochemical
a. Feedstock Handling
b. Biomass Pretreatment
c. Hydrolysis
i. Acid Hydrolysis
ii. Enzymatic Hydrolysis
d. Fuel Production
e. Fuel Separation
f. Process Variations
g. Current Status of Biochemical Conversion Technology
h. Path to Commercialization
2. Thermochemical
a. Ethanol Based on a Thermochemical Platform
b. Diesel and Naphtha Production Based on a Thermochemical Platform
3. Hybrid Thermochemical/Biochemical Processes
a. Biochemical Step Following Thermochemical Step
b. Concurrent Biochemical and Thermochemical Steps
4. Pyrolysis and Depolymerization
a. Pyrolysis Diesel Fuel and Gasoline
b. Catalytic Depolymerization
5. Catalytic Reforming of Sugars to Gasoline
V. Changes to RFS Regulations
A. Delayed RIN Generation for New Pathways
B. Aggregate Compliance Approach for Renewable Biomass From Foreign Countries
1. Criteria and Considerations
2. Applicability of the Aggregate Approach
3. Data Sources
4. Petition Submission
5. Petition Process
VI. Annual Administrative Announcements
A. 2011 Price for Cellulosic Biofuel Waiver Credits
B. Assessment of the Domestic Aggregate Compliance Approach
VII. Comments Outside the Scope of This Rulemaking
VIII. Public Participation
IX. Statutory and Executive Order Reviews
A. Executive Order 12866: Regulatory Planning and Review
B. Paperwork Reduction Act
C. Regulatory Flexibility Act
D. Unfunded Mandates Reform Act
E. Executive Order 13132: Federalism
F. Executive Order 13175: Consultation and Coordination With Indian Tribal Governments
G. Executive Order 13045: Protection of Children From Environmental Health Risks and Safety Risks
H. Executive Order 13211: Actions Concerning Regulations That Significantly Affect Energy Supply, Distribution, or Use
I. National Technology Transfer Advancement Act
J. Executive Order 12898: Federal Actions To Address Environmental Justice in Minority Populations and Low-Income Populations
K. Congressional Review Act
X. Statutory Authority

I. Executive Summary

EPA issued comprehensive regulations in 2007 to implement the Renewable Fuel Standard (RFS1) program in Section 211(o) of the Clean Air Act, as required by the Energy Policy Act of 2005 (EPAct). The statutory requirements for the RFS program were subsequently modified through the Energy Independence and Security Act of 2007 (EISA), resulting in the publication of revised regulatory requirements (RFS2) on March 26, 2010.[1] In general, the transition from the RFS1 requirements of EPAct to the RFS2 requirements of EISA occurred on July 1, 2010.

EPA is required to determine and publish the applicable annual percentage standards for cellulosic biofuel, biomass-based diesel, advanced biofuel and total renewable fuel for each compliance year by November 30 of the previous year. The determination of the applicable cellulosic biofuel standard under RFS2 requires that EPA first project the volume of cellulosic biofuel production for the following year. If the projected volume of cellulosic biofuel production is less than the applicable volume specified in Section 211(o)(2)(B)(i)(III) of the statute, EPA must lower the required volume used to set the annual cellulosic biofuel percentage standard to the projected available volume. If we lower the applicable cellulosic biofuel volume, we must also determine whether the advanced biofuel and/or total renewable fuel volumes should be reduced by the same or a lesser amount. We provided our volume projections and proposed percentage standards for 2011 in a Notice of Proposed Rulemaking (NPRM) on July 20, 2010 (75 FR 42238). Today's action provides our final projection of cellulosic biofuel production for 2011, and final percentage standards for all four categories of renewable fuel for compliance year 2011. The final 2011 standards have been based upon statutory requirements, comments received in response to the NPRM, the estimate of projected gasoline, diesel, and biofuel volumes that the EIA provided to EPA on October 20, 2010, and other relevant information.

Today's rule does not include an assessment of the impacts of the standards we are finalizing for 2011. All of the impacts of the RFS2 program associated with the applicable volumes of biofuel specified in the statute were addressed in the RFS2 final rule published on March 26, 2010.

Today's notice also finalizes two changes to the general RFS2 program regulations. The first change modifies a regulatory provision for "delayed RINs" that we implemented through a previous action on September 28, 2010.[2] This provision provides a temporary and limited means for certain renewable fuel producers to generate RINs after they have produced and sold renewable fuel. In today's action we are modifying this regulatory provision to be more broadly applicable as described more fully in Section V.A. The second regulatory provision we are finalizing today establishes a petition process and criteria for EPA to use in determining whether to authorize the use of an aggregate approach to verify that feedstocks from foreign countries meet the definition of renewable biomass that would be akin to that applicable to producers using crops and crop residue grown in the United States. Further discussion of these provisions can be found in Section V.B.

Finally, in today's rulemaking we are announcing the price for cellulosic biofuel waiver credits, and are also announcing the results of our annual assessment of the aggregate compliance approach for U.S. crops and crop residue. These announcements are provided in Section VI.

A. Statutory Requirements for Renewable Fuel Volumes

The volumes of renewable fuel that must be used under the RFS2 program each year (absent an adjustment or waiver by EPA) are specified in CAA 211(o)(2)(B). These volumes for 2011 are shown in Table I.A–1.

TABLE I.A–1—REQUIRED VOLUMES IN THE CLEAN AIR ACT FOR 2011

[Billion gal]

	Actual volume	Ethanol equivalent volume
Cellulosic biofuel	[a] 0.25	0.25
Biomass-based diesel	0.80	1.20
Advanced biofuel	1.35	1.35
Renewable fuel	13.95	13.95

[a] This value assumes that all cellulosic biofuel would be ethanol. If any portion of the renewable fuel used to meet the cellulosic biofuel volume mandate has a volumetric energy content greater than that for ethanol, this value will be lower.

By November 30 of each year, the EPA is required under CAA 211(o)(3)(B) to determine and publish in the **Federal**

[1] 75 FR 14670.

[2] 75 FR 59622.

Register percentage standards for the following year that will ensure that the applicable volumes of renewable fuel are used. These standards are to be based in part on transportation fuel (i.e. gasoline and diesel) volume estimates provided by the Energy Information Administration (EIA). The calculation of the percentage standards is based on the formulas in 40 CFR 80.1405(c) which express the required volumes of renewable fuel as a volume percentage of gasoline and diesel sold or introduced into commerce in the 48 contiguous states plus Hawaii.

The statute requires the EPA to determine whether the projected volume of cellulosic biofuel production for the following year is less than the minimum applicable volume shown in Table I.A–1. If this is the case, then the standard for cellulosic biofuel must be based upon the projected available volume rather than the applicable volume in the statute. In addition, if EPA reduces the applicable volume of cellulosic biofuel below the level specified in the statute, the Act also indicates that we may reduce the applicable volume of advanced biofuels and total renewable fuel by the same or a lesser volume.

B. Assessment of 2011 Cellulosic Biofuel Production

To estimate the projected available volume of cellulosic biofuel in the U.S. in 2011, we researched potential production sources by company and facility. This included sources that were still in the planning stages, those that were under construction, and those that are already producing some volume of cellulosic ethanol, cellulosic diesel, or some other type of cellulosic biofuel. We considered all pilot and demonstration plants as well as commercial plants. From this universe of potential cellulosic biofuel sources we identified the subset that had a possibility of producing some volume of qualifying cellulosic biofuel for use as transportation fuel in 2011. Further analysis and investigation allowed us to determine which ones were actually in a position to produce and make available any commercial volumes of cellulosic biofuel in 2011. In this process we also considered factors such as the current and expected state of funding, the status of the technology and contracts for feedstocks or product sales, and progress towards construction and production goals. This assessment formed the basis of our projection for potentially available 2011 volumes.

In our assessment we evaluated both domestic and foreign sources of cellulosic biofuel. We determined that five U.S. facilities have the potential to make volumes of cellulosic biofuel commercially available for transportation use in the U.S. in 2011. We also identified three international facilities, two in Canada and one in Germany, that we expect will produce cellulosic biofuel in 2011. While these facilities may also be able to produce cellulosic volume in 2011, we determined that they are unlikely to make the fuel available to the U.S. market. Based on our assessment for this rulemaking, we are lowering the applicable volume of cellulosic biofuel for 2011 from the statutory volume of 250 million gallons to 6.0 million ethanol-equivalent gallons. This volume is the basis for the percentage standard we are setting for cellulosic biofuel in 2011. As with any projections of future production there is some uncertainty associated with these volumes. These uncertainties in our 2011 cellulosic volume projection are discussed in more detail in Section II.A. Nevertheless, we believe that 6.0 million ethanol-equivalent gallons represents a reasonable projection of potential 2011 cellulosic production volume for use in setting the standard.

EPA is currently aware of more than 20 facilities representing over 300 million gallons of production that are targeting commercial production of cellulosic biofuels in 2012. As a result, although the cellulosic biofuel standard we are setting for 2011 is considerably less than the applicable volumes established in EISA, EPA believes there is reason for optimism when looking at the plans for the cellulosic biofuel industry in 2012 and beyond.

C. Advanced Biofuel and Total Renewable Fuel

As described in Section I.A above, the statute indicates that we may reduce the applicable volume of advanced biofuel and total renewable fuel if we determine that the projected volume of cellulosic biofuel production for 2011 falls short of the statutory volume of 250 million gallons. Since we are setting the cellulosic biofuel standard significantly below the statutory volume of 250 million gallons, we also needed to evaluate whether we should lower the required volumes for advanced biofuel and total renewable fuel.

We first considered whether it appears likely that the required biomass-based diesel volume of 0.8 billion gallons can be met with existing biodiesel production potential in 2011, as biodiesel is currently the predominant form of biomass-based diesel. As discussed in Section II.C, we believe that the 0.8 billion gallon standard can indeed be met. Since biodiesel has an Equivalence Value of 1.5, 0.8 billion physical gallons of biodiesel would provide 1.20 billion ethanol-equivalent gallons that can be counted towards the advanced biofuel standard of 1.35 billion gallons. Of the remaining 0.15 billion gallons (150 million gallons), 6.0 million gallons will be met with cellulosic biofuel. Based on our analysis as described in Section II.B, we believe that there are sufficient sources of other advanced biofuel, such as additional biodiesel, renewable diesel, or imported sugarcane ethanol, such that the standard for advanced biofuel can remain at the statutory level of 1.35 billion gallons. We have also determined that there is sufficient qualifying domestic corn ethanol production capacity to meet the balance of the total renewable fuel standard that is not satisfied with advanced biofuel. Therefore, in today's final rule neither the 2011 volumes for advanced biofuel nor total renewable fuel are being lowered below the volumes specified in the statute.

D. Final Percentage Standards

The renewable fuel standards are expressed as a volume percentage, and are used by each refiner, blender or importer to determine their renewable fuel volume obligations. The applicable percentages are set so that if each regulated party meets the percentages, and if EIA projections of gasoline and diesel use are accurate, then the amount of renewable fuel, cellulosic biofuel, biomass-based diesel, and advanced biofuel used will meet the applicable volumes required on a nationwide basis. To calculate the percentage standard for cellulosic biofuel for 2011, we have used the volume of 6.0 million ethanol-equivalent gallons (representing 6.6 million physical gallons). We are also specifying that the applicable volumes for biomass-based diesel, advanced biofuel, and total renewable fuel for 2011 will be those specified in the statute. These volumes are shown in Table I.D–1.

TABLE I.D–1—FINAL VOLUMES FOR 2011

	Actual volume	Ethanol equivalent volume
Cellulosic biofuel	6.6 mill gal	6.0 mill gal.
Biomass-based diesel	0.80 bill gal	1.20 bill gal.
Advanced biofuel	1.35 bill gal	1.35 bill gal.
Renewable fuel	13.95 bill gal	13.95 bill gal.

Four separate standards are required under the RFS2 program, corresponding to the four separate volume requirements shown in Table I.D–1. The specific formulas we use to calculate the renewable fuel percentage standards are contained in the regulations at § 80.1405 and repeated in Section III.B.1. The percentage standards represent the ratio of renewable fuel volume to non-renewable gasoline and diesel volume. The projected volumes of gasoline and diesel used to calculate the standards are provided by EIA. Because small refiners and small refineries are also regulated parties beginning in 2011 [3], there is no small refiner/refinery volume adjustment to the 2011 standard as there was for the 2010 standard. Thus, the increase in the percentage standards relative to 2010 appears smaller than would otherwise be the case, since more obligated parties will be participating in the program. The final standards for 2011 are shown in Table I.D–2. Detailed calculations can be found in Section III.

TABLE I.D–2—FINAL PERCENTAGE STANDARDS FOR 2011

	Percent
Cellulosic biofuel	0.003
Biomass-based diesel	0.69
Advanced biofuel	0.78
Renewable fuel	8.01

E. 2011 Price for Cellulosic Biofuel Waiver Credits

Since we are reducing the required volume of cellulosic biofuel for 2011 below the applicable volume specified in the statute, EPA is required to offer biofuel waiver credits to obligated parties that can be purchased in lieu of acquiring cellulosic biofuel RINs. These waiver credits are not allowed to be traded or banked for future use, and are only allowed to be used to meet the 2011 cellulosic biofuel standard. Moreover, unlike cellulosic biofuel RINs, waiver credits may not be used to meet either the advanced biofuel standard or the total renewable fuel standard. For the 2011 compliance period, we are making cellulosic biofuel waiver credits available to obligated parties for end-of-year compliance should they need them at a price of $1.13 per credit. Further discussion is provided in Section VI.A.

F. Assessment of the Aggregate Compliance Approach

As part of the RFS2 regulations, EPA established an aggregate compliance approach for renewable fuel producers who use planted crops and crop residue from U.S. agricultural land. This compliance approach relieved such producers (and importers of such fuel) of the individual recordkeeping and reporting requirements otherwise required of producers and importers to verify that feedstocks used in the production of RIN-qualifying renewable fuel meet the definition of renewable biomass. EPA determined that 402 million acres of U.S. agricultural land was available in 2007 (the year of EISA enactment) for production of crops and crop residue that would meet the definition of renewable biomass, and determined that as long as this total number of acres is not exceeded, it is unlikely that new land has been devoted to crop production based on historical trends and economic considerations. We indicated that we would conduct an annual evaluation of total U.S. acreage that is cropland, pastureland, or conservation reserve program land, and that if the value exceed 402 million acres, producers using domestically-grown crops or crop residue to produce renewable fuel would be subject to individual recordkeeping and reporting to verify that their feedstocks meet the definition of renewable biomass.

The RFS2 regulations provide that EPA will make a finding concerning whether the 2007 baseline amount of U.S. agricultural land has been exceeded in a given year and will publish this finding in the **Federal Register** by November 30 of the same year. Based on data provided by the USDA, we have estimated that U.S. agricultural land reached 398 million acres in 2010, and thus did not exceed the 2007 baseline acreage.

We also stated in the preamble to the final RFS2 rule that if, at any point, EPA finds that the total agricultural land is greater than 397 million acres, EPA will conduct further investigations to evaluate validity of the domestic aggregate compliance approach. The total acreage estimate of 398 million acres exceeds the trigger point for further investigation, therefore EPA, with the help of USDA, will conduct further investigations into this matter. Additional discussion on this matter can be found in Section VI.B of this preamble.

II. Volume Production and Import Potential for 2011

In order to project production volumes of cellulosic biofuel in 2011 for use in setting the percentage standards, we collected information on individual facilities that have the potential to produce qualifying cellulosic biofuel volumes for consumption as transportation fuel, heating oil, or jet fuel in the U.S. in 2011. We also evaluated the production and import potential for biomass-based diesels, advanced biofuels, and other conventional renewable fuels such as corn-ethanol. This section describes the volumes that we believe could potentially be produced or imported in 2011. As with any projections of future production there is some uncertainty associated with these volumes. Many of the uncertainties associated with our projected volumes are also discussed in this section. Section III describes the derivation of the percentage standards that will apply to obligated parties in 2011.

The 2011 volume projections in today's final rule are based on information from a wide spectrum of sources. For instance, EPA received input on our assessment of 2011 production and import volumes from other government organizations including the Department of Energy (DOE), Energy Information

[3] The Department of Energy concluded that there is no reason to believe that any small refinery would be disproportionately harmed by inclusion in the RFS2 program for 2011 and beyond. See DOE report "EPACT 2005 Section 1501 Small Refineries Exemption Study" (January 2009). We will revisit extensions to the exemption for small refineries if DOE revises their study and provides a different conclusion, or we determine that an individual small refinery has demonstrated that it will suffer a disproportionate economic hardship under the RFS program.

Administration (EIA), and United States Department of Agriculture (USDA). The EIA projections of gasoline, diesel, biomass-based diesel, and cellulosic biofuel provided to EPA on October 20, 2010 were particularly germane. These EIA projections are discussed in more detail in Section II.A.3.

We also received a number of comments related to our proposed volume projections and the associated percentage standards. With regard to the proposed cellulosic biofuel projections, most commenters agreed that the proposed range of 5—17.1 million gallons (6.5—25.5 million ethanol-equivalent gallons) was appropriate, but no commenter suggested a specific volume for 2011 or a clear methodology for determining the appropriate volume. However, several commenters provided qualitative assessments. For instance, refiners suggested that the low end of the range would be more appropriate as it would minimize the possibility that obligated parties would be unable to procure sufficient cellulosic biofuel RINs to meet their obligations. They further stated that the cellulosic biofuel volume used to set the 2011 standard should be based on existing production volumes rather than a projection of potential volume in 2011. In contrast, several proponents of the advanced biofuels industry stated that the cellulosic biofuel standard should be set as high as possible in order to establish the market demand that investors seek before funding cellulosic biofuel projects. They argued that the cellulosic biofuels industry is unlikely to grow without support in the form of a high cellulosic biofuel standard.

Since commenters did not provide their own quantitative assessments of projected cellulosic biofuel volumes for us to consider, we based our assessment of the production capabilities of planned and existing biofuel production facilities on projections provided by EIA as well as data provided by other government agencies and our own contact with many of these companies. In directing EPA to project cellulosic biofuel production for purposes of setting the annual cellulosic biofuel standard, Congress did not specify what degree of certainty should be reflected in the projections. We believe that the cellulosic biofuel standard should provide an incentive for the industry to grow according to the goals that Congress established through EISA. However, we also believe that the cellulosic biofuel standard that we set should be within the range of what can be attained based on projected domestic production and import potential. Any estimate we use to set the cellulosic biofuel standard for 2011 will have some uncertainty in terms of actual attainment, and the level of such uncertainty generally rises with the volume mandate. Our intention is to balance such uncertainty with the objective of providing an incentive for growth in the industry. To this end, we explored the 2011 volumes for individual companies as projected by EIA to determine not only what volumes might be anticipated, but more importantly what volumes were potentially attainable. Our final projected available volume of cellulosic biofuel for 2011 reflects these considerations. Nevertheless, in the event that the biofuel industry ultimately fails to provide sufficient volumes to meet the 2011 standard for cellulosic biofuel, obligated parties can purchase waiver credits from the EPA under the provisions of § 80.1456. The price for such waiver credits is being established in today's action in Section VI.A.

In addition to the sources described above, we had intended to use information provided through the Production Outlook Reports required under § 80.1449 for all registered renewable fuel producers and importers. These reports were due to the Agency by September 1, 2010. While these reports were informative for the companies that did submit them, most potential cellulosic biofuel producers had not yet registered under the RFS program and therefore were not required to submit Production Outlook Reports. Moreover, only a small percentage of the reports were both complete and correct upon initial submission, and about one-fourth of all registered producers and importers failed to submit a report. These issues are likely the result of this being the first time that such reports were due and remedial actions are expected to lead to a more complete set of valid reports later in 2010. However, the Production Outlook Reports were of limited value for development of the biofuel volume projections that we used to set the standards for 2011.

In our analysis, we have focused on biofuel production as required by Section 211(o)(7)(D)(i) of the Clean Air Act. We have not considered the demand for biofuels as a factor in determining the appropriate volume of cellulosic biofuel to require in 2011. However, we note that the volumes of cellulosic biofuel that we proposed and the required volume we are finalizing today are very small in terms of total demand for biofuels, and are thus unlikely to impact issues related to demand for biofuels such as infrastructure for distributing or consuming biofuels.

A. Cellulosic Biofuel

The task of projecting the volume of cellulosic biofuels that could be produced in 2011 is challenging. Announcements of new projects, changes in project plans, project delays, and cancellations occur with great regularity. Biofuel producers face not only the challenge of the scale-up of innovative, first-of-a-kind technology, but also the challenge of securing funding in a difficult economy.

In order to project cellulosic biofuel production volumes for 2011, EPA has tracked the progress of over 100 cellulosic biofuel production facilities. From this large group of over 100 production facilities we identified 35 that had planned to begin cellulosic biofuel production by early 2012. From this smaller list of facilities we used publically available information, as well as information provided by DOE and USDA, to determine which facilities were the most likely candidates to produce cellulosic biofuel and make it commercially available in 2011. Each of these companies was then contacted to provide the most up to date information possible on their current cellulosic biofuel production plans for 2011. Our estimate of the projected available cellulosic biofuel volume for 2011 is based on the information we received in conversations with these companies as well as our own assessment of the potential for these facilities to produce cellulosic biofuel in the volumes indicated. Throughout this process EPA engaged in discussions with EIA to share information and insights into potential cellulosic biofuel production in 2011. For more details on EIA's cellulosic biofuel projections for 2011 and a discussion of the differences between the projections made by EPA and EIA see Section II.A.3.

A brief description of each of the companies we believe has the potential to produce cellulosic biofuel and make it commercially available can be found below. A more in-depth discussion of the technologies used to produce cellulosic biofuels can be found in Section IV. Based on this information, EPA projects that 6.6 million gallons of cellulosic biofuel (corresponding to 6.0 million ethanol-equivalent RINs) could be produced and made available in 2011. This is the number we used as the basis for the percentage standard for 2011. The rest of this section describes the analyses that we used as the basis for this projected available production volume.

1. Domestic Cellulosic Biofuel

Based on our assessment of the cellulosic biofuel industry, we believe that there are four companies in the United States with the potential to produce cellulosic alcohol and make it commercially available in 2011. These companies are DuPont Danisco, Fiberight, KL Energy Corporation, and Range Fuels. EPA also believes that a fifth company, KiOR, will be in a position to produce some cellulosic diesel fuel in 2011. This section will provide a brief description of each of these companies and our assessment of their potential fuel production in 2011 based on information we have acquired to date.

DuPont Danisco Cellulosic Ethanol (DDCE) began start up operations at a small demonstration facility in Vonore, Tennessee in early 2010. This facility has a maximum production capacity of 250,000 gallons of ethanol per year and uses an enzymatic hydrolysis process to convert corn cobs into ethanol. DDCE has indicated that they could produce up to 150,000 gallons of ethanol in 2011 from the Vonore facility.

Fiberight is a company planning to convert MSW to ethanol. Fiberight purchased a small corn ethanol plant in Blairstown, IA and has modified it to produce ethanol from cellulosic biomass. They use an enzymatic hydrolysis process to convert the cellulosic waste materials to simple sugars and then to ethanol. Fiberight plans to initially use a waste cellulose stream from a paper recycling facility as their primary feedstock, and eventually complement that with a sorted MSW stream. Fiberight started producing ethanol in the summer of 2010 and plans to ramp up to full production capacity by late 2011. Fiberight has provided month-by-month production targets for 2011 to EPA. Based on these targets their projected production potential for 2011 is 2.8 million gallons of cellulosic ethanol. While there is still some uncertainty as to whether their supply of waste cellulose from paper recycling meets the regulatory definition of renewable biomass, fuel from such feedstock would only account for about one-fifth of the total ethanol expected to be produced by Fiberight in 2011. Moreover, Fiberight's choice of feedstock for ethanol production could change depending on whether waste cellulose from paper recycling is determined to meet the regulatory definition of renewable biomass. For the purposes of projecting potentially available cellulosic volume for 2011, therefore, we have included in our estimates the portion that could be produced from waste cellulose from paper recycling.

The third company that EPA is aware of with the potential to produce cellulosic ethanol in 2011 is KL Energy Corporation. KL Energy has a demonstration facility in Upton, Wyoming that uses an enzymatic hydrolysis process to convert wood chips and wood waste to ethanol and has just announced a partnership with Petrobras for the construction of additional facilities. The demonstration facility has a maximum annual production volume of 1.5 million gallons and has been operational since the fall of 2007. Since KL Energy completed construction of this facility they have been gradually ramping up production and gathering information to optimize this and future ethanol production facilities. While production levels from this facility have so far been below capacity, KL has informed EPA that they intend to produce up to 400,000 gallons of cellulosic ethanol from their Upton, WY facility in 2011.

A fourth company that EPA expects will produce cellulosic biofuel in 2011 is Range Fuels. Range has a facility in Soperton, Georgia capable of processing 125 dry tons of feedstock per day. This facility completed commissioning in the second quarter of 2010 and began producing cellulosic methanol in the third quarter of 2010. Range initially plans to use wood chips as their feedstock, but will also investigate using different types of woody biomass and herbaceous energy crops. In Phase I of this project, Range will predominantly use a commercial methanol catalyst, but they plan to produce some ethanol using a proprietary mixed alcohol catalyst. No approved pathway currently exists under the RFS program for the generation of RINs for methanol, and the opportunities for using methanol in the transportation fuel market are limited. However, Range does plan on adding capabilities in Phase II that will increase the relative production volume of ethanol versus methanol. Moreover, EPA is evaluating possible RIN-generating pathways for cellulosic methanol, including the potential for cellulosic methanol used in the production of biodiesel to qualify for the generation of cellulosic biofuel RINs.

At this time EPA projects that Range Fuels will produce 0.1 million gallons of ethanol and 2.9 million gallons of methanol from this facility in 2011. Given a methanol equivalence value of 0.75, this fuel represents 2.3 million ethanol equivalent gallons. Based the potential for Range to produce larger proportions of ethanol, and the possibility that RIN-generating pathways for cellulosic methanol could be identified or approved we are projecting production of 2.3 million gallons of RIN-generating cellulosic biofuel by Range Fuels in 2011.

The only company that EPA is aware of that may be a producer of cellulosic diesel in 2011 is KiOR. KiOR has developed a catalytic pyrolysis technology capable of converting cellulosic biomass directly to a bio-crude with a low oxygen content. KiOR currently has a small pilot facility capable of producing 10–15 barrels of bio-crude per day in Houston, Texas. In order for this fuel to be used as a transportation fuel it would have to go through further refining. This could either be done at the KiOR facility if the necessary equipment is installed, or at an existing refinery. While KiOR is not currently producing a finished transportation fuel, this bio-oil could be upgraded and be eligible for RIN generation under the RFS program. EPA projects that this facility can produce 0.2 million gallons of fuel, representing 0.3 million RINs in 2011.

In the proposed rule we also discussed two other potential cellulosic diesel producers, Bell BioEnergy and Cello Energy. Since the publication of the proposed rule the project that Bell BioEnergy had been working on that EPA had identified as a potential source of cellulosic biofuel has been terminated. They are currently exploring other options for locations for their first commercial facility, as well as potential sources of funding. While we are not counting on any volume from Bell BioEnergy for the 2011 projected available volume, it is feasible that they could produce cellulosic diesel or jet fuel in 2011 if they are able to identify a suitable location for their facility and secure the necessary funding in the near future.

The other cellulosic diesel company discussed in the proposed rule is Cello Energy. Cello has a structurally complete facility in Bay Minette, Alabama with an annual production capacity of 20 million gallons of diesel per year. While their facility is structurally complete, they have experienced feedstock preparation and handling issues that need to be resolved before they will be able to again attempt start up and production. Litigation related to contract issues has also provided a set-back likely delaying any potential production from Cello's facility. On October 20, 2010 Cello Energy filed for Chapter 11 bankruptcy, therefore no volume from this facility has been included in our projected cellulosic biofuel volume for 2011.

We are currently unaware of any companies in the United States planning on producing cellulosic biofuel other than ethanol, methanol, and diesel and making it commercially available in 2011. EPA is currently tracking the efforts of 10 companies that plan to produce fuels such as butanol, gasoline, jet fuel, dimethyl ether (DME), and others. Many of these companies have reported that they are still developing their technologies and waiting for funding, and that they are not expecting to make any cellulosic fuel commercially available until 2012 at the earliest. There are several companies with small demonstration facilities who intend to produce biofuels from cellulosic feedstocks, but are currently optimizing their technology with sugar or starch feedstocks. EPA anticipates that in the future this may be a significant source of cellulosic biofuel, however we have not counted these potential volumes in our projections for 2011.

2. Imports of Cellulosic Biofuel

In addition to the companies located in the United States, EPA is also aware of three companies located in other countries with the potential for cellulosic biofuel production in 2011. If this fuel is produced with renewable biomass and imported into the United States for use in transportation fuel, jet fuel, or heating oil, it would be eligible to participate in the RFS2 program. However, for the reasons described below, we have not included any imported cellulosic biofuel in our projections of available U.S. volume for 2011.

Iogen uses a steam explosion pre-treatment process followed by enzymatic hydrolysis to produce cellulosic ethanol from wheat, oat, and barley straw. They have a demonstration facility with an annual production capacity of 500,000 gallons of ethanol located in Ontario, Canada. This facility has been operational and producing small volumes of ethanol since 2004. So far all of the ethanol produced by this facility has been used locally and in racing and other promotional events. In conversations with EPA Iogen has indicated that they do not intend to export any fuel to the United States from this facility in 2011.

Another Canadian company with the potential to produce cellulosic ethanol in 2011 is Enerkem. Enerkem plans to use a thermo-chemical process to gasify separated MSW and other waste products and then use a catalyst to convert the synthesis (syn) gas into methanol and ethanol. Enerkem finished construction on a 1.3 million gallon per year facility in Westbury, Quebec in June 2010 and plans to begin producing methanol and ethanol later in 2010. They are also planning a 10 million gallon per year facility in Edmonton, Alberta, however production from this facility is not expected until 2012. Enerkem has informed EPA that they plan to market their products locally, and do not intend any exports to the United States.

A third international company that may produce commercial volumes of cellulosic biofuel in 2011 is Choren. Choren has completed construction of a facility in Freiberg, Germany with a production capacity of 3.9 million gallons of diesel fuel. This facility used a thermochemical process to convert biomass to syngas and then catalytically converts the syngas to diesel fuel. The facility is currently undergoing commissioning and it is unclear when they will begin commercial production. Additionally, there is likely to be strong local demand for the fuel. Due to these factors, EPA is not projecting that any fuel produced by Choren will be imported into the U.S. in 2011.

While these facilities appear to be the most likely sources of imported cellulosic biofuel, it is possible that cellulosic biofuels produced by other foreign companies may be imported into the United States. One strong candidate as a potential source of cellulosic biofuel imports is Brazil, due to its established ethanol industry and history of importing ethanol into the United States. EPA is aware of several companies planning commercial scale production of cellulosic biofuel in Brazil. It is unlikely these projects will be completed in time to supply cellulosic biofuel to the United States in 2011; however they may be a significant source of cellulosic biofuel imports in future years.

3. Projections From the Energy Information Administration

Section 211(o)(3)(A) of the Clean Air Act requires EIA to "* * * provide to the Administrator of the Environmental Protection Agency an estimate, with respect to the following calendar year, of the volumes of transportation fuel, biomass-based diesel, and cellulosic biofuel projected to be sold or introduced into commerce in the United States." EIA provided these estimates to us on October 20, 2010.[4] With regard to cellulosic biofuel, the EIA estimated that the available volume in 2011 would be 3.94 mill gallons based on their assessment of the utilization of production capacity. A summary of the plants they considered is shown below in Table II.A.3–1.

TABLE II.A.3–1—EIA'S PROJECTED CELLULOSIC BIOFUEL PLANT PRODUCTION ESTIMATES FOR 2011

Company name	Location	Feedstock	Fuel	Capacity (MGY)	Facility status	Expected utilization (Percent)	2011 Production (MG)
DuPont Danisco	Vonore, TN	Corn cobs, then switchgrass.	Ethanol	0.25	Online	10	0.03
Fiberight	Blairstown, IA	MSW	Ethanol	6.0	Online	46	2.76
KL Energy	Upton, WY	Wood	Ethanol	1.5	Online	10	0.15
Range	Soperton, GA	Wood Waste	Methanol, Ethanol	4	Online	25	1.0
Total							3.94

While EIA's projected cellulosic biofuel production estimate for 2011 is, with the exception of KiOR, based on an evaluation of the same companies that EPA evaluated, the production volume assumed by EIA for each company is lower in all cases. We believe that the difference reflects EIA's intention to estimate volumes that each company has a high certainty of reaching in 2011. As described in Section II.A above, we have projected the volume of cellulosic

[4] Letter from Richard Newell, EIA Administrator to Lisa Jackson, EPA Administrator October 20, 2010.

biofuel that we believe is attainable given the issues that each company faces, while recognizing that there is some uncertainty in the projected volumes. We believe that many or all of the uncertainties associated with the potential volume production at each company can be resolved in a positive direction.

We have considered EIA's projection of cellulosic biofuel production for 2011 in the context of setting the 2011 cellulosic biofuel standard, and we believe that it represents a volume that the industry is unlikely to fall below. However, we believe that it is appropriate to set the applicable volume at a level that provides an incentive for developing cellulosic biofuel facilities to come on line as expeditiously as possible, and to provide reasonable assurance that there will be a market for their product if they do. Moreover, we also believe that CAA 211(o)(7)(D) is best interpreted to vest the authority for making the projection with EPA, since it provides that the projection is "determined by the Administrator based on the estimate provided [by EIA]." If Congress intended that EPA simply adopt EIA's projection without an independent evaluation, it would not have specified that the projection is "determined" by EPA. Although the statute provides that our determination must be "based on the estimate provided" by EIA, we believe that our consideration of EIA's estimate in deriving our own projection satisfies this statutory requirement. For the reasons described above, we believe that EPA's projection takes into account uncertainties in a manner that best furthers the objectives of the statute.

4. Overall 2011 Volume Projections

The information EPA has gathered on the potential cellulosic biofuel producers in 2011, summarized above, allows us to project the potential production volume of each facility in 2011. After the appropriate equivalence value has been applied to the volumes from these facilities, the overall projected ethanol-equivalent volume of cellulosic biofuel for 2011 can be totaled. This information is summarized in Table II.A.4–1 below.

TABLE II.A.4–1—PROJECTED POTENTIAL VOLUME OF CELLULOSIC BIOFUEL PRODUCTION IN 2011

Company name	Location	Feedstock	Fuel	Capacity (MGY)	Facility status	Projected potential volume (MG)	Ethanol equivalent gallons (MG)
DuPont Danisco	Vonore, TN	Corn cobs, then switchgrass.	Ethanol	0.25	Online	0.15	0.15
Fiberight	Blairstown, IA	MSW	Ethanol	6	Online	2.8	2.8
KL Energy	Upton, WY	Wood	Ethanol	1.5	Online	0.4	0.4
KiOR	Houston, TX	Wood Waste	Diesel	0.2	Online	0.2	0.3
Range	Soperton, GA	Wood Waste	Methanol, Ethanol	4	Online	3.0	2.3
Total						6.6	6.0

While the production volumes in Table II.A.4–1 have some uncertainty, we believe that a total volume of 6.0 million gallons is attainable. By basing the 2011 cellulosic biofuel standard on the attainable volumes rather than discounting projected volumes to account for uncertainty, we aim to avoid the undesirable scenario in which cellulosic biofuel production exceeds the mandated volume. Such a scenario would result in weak demand for cellulosic biofuels and RINs. Additionally, while obligated parties are able to purchase cellulosic biofuel waivers credits in the event that production of cellulosic biofuel is insufficient to meet the 2011 standard, no mechanism exists for this standard to be raised should cellulosic biofuel production exceed the 2011 standard. The intent of Congress in establishing the RFS program through EISA was to provide a reliable market for renewable fuels and in doing so to spur growth in the cellulosic biofuels industry. EPA believes the projected available volume finalized in this rule best reflects these intentions.

Three commenters (Abengoa, Growth Energy, and Unica) supported the range of 6.5–25.5 million gallons that EPA proposed in the NPRM. The Biotechnology Industry Organization and Dupont Danisco Cellulosic Ethanol commented that the EPA's proposed range was a reasonable estimate, but encouraged EPA to consider ways the RFS program can serve a risk mitigation function for the cellulosic biofuel industry. Two commenters, American Petroleum Institute and National Petrochemical & Refiners Association, suggested that EPA consider only companies that have demonstrated, proven production records when setting the cellulosic standard for the following year. The Low Carbon Synthetic Fuels Association suggested EPA set the standard high enough so that any cellulosic biofuel that might be produced in 2011 in the U.S. or internationally would be included in the volume projections. They suggest that this would mean using the high end of the proposed volume, or even some volume above the proposed range.

Based on our assessment of the potential production capabilities of individual companies as described above, EPA is finalizing the cellulosic biofuel standard for 2011 at 6.0 million ethanol-equivalent gallons of cellulosic biofuel. This number represents the volume of RIN-generating cellulosic biofuel that we believe can be made available for use as transportation fuel, heating oil, or jet fuel in 2011. It incorporates some reductions from the annual production capacity of each facility based on when fuel production can begin and assumptions regarding a ramp-up period to full production. We believe that a production volume of 6.0 mill gal is attainable despite the uncertainties, since none of the possible impediments to attaining this volume appear insurmountable. Moreover, by setting the standard for cellulosic biofuel based on the volumes that are attainable, we are providing greater incentives for producers to overcome uncertainties and greater opportunities for funding based on an established demand.

There are also a variety of factors that could lead to production volumes greater than those listed in Table II.A.4–1 and make up for potential shortfalls elsewhere. For instance:

- For each of the facilities listed, with the exception of KiOR, we are projecting that their production will be some

volume less than the capacity of their facility. It is possible, however, that these companies could produce a greater volume of fuel than they are currently anticipating or has been projected by EPA.

• It is possible that companies that are currently targeting 2012 for commercial production may produce cellulosic biofuel ahead of schedule and generate RINs in 2011. None of this volume was included in our projection for 2011.

• A high demand for cellulosic biofuels may be sufficient to cause companies to import fuel into the United States, even if they currently have no plans to do so. As described in Section II.A.2 above, there are several foreign producers that are either producing cellulosic biofuel now, or could potentially produce some cellulosic biofuel volume in 2011.

Finally, we note that if the actual volume of cellulosic biofuel RINs that are available in 2011 falls short of the 6.0 million gallon RINs used to derive the 2011 cellulosic biofuel standard, obligated parties have other recourses:

• Purchase cellulosic biofuel waiver credits from the EPA (see further discussion in Section VI.A).

• Carry over a deficit from 2011 into 2012 according to § 80.1427(b).

5. Projections of Cellulosic Biofuel for 2012

In addition to the companies discussed above, EPA also assessed the production capabilities of many other companies to determine their ability to produce cellulosic ethanol in 2011. Many of these companies had at some point planned to produce cellulosic ethanol at commercial scale by 2011, but due to a variety of factors have had their plans delayed. Despite these delays, the outlook for 2012 and later years still looks promising.

Although the cellulosic biofuel standard we are setting for 2011 is considerably below the applicable volumes established in EISA, EPA believes there is reason for optimism when looking at the plans for the cellulosic biofuel industry in 2012 and beyond. EPA is currently aware of more than 20 facilities representing over 300 million gallons of production that are targeting commercial production of cellulosic biofuels in 2012. Many companies, including Abengoa, AE Biofuels, BlueFire Ethanol, Coskata, Fulcrum, POET, and Vercipia, are intending to begin bringing large scale facilities online, with physical capacities of between 10 and 100 million gallons of cellulosic biofuel per year. There is also hope within the industry that as these first-of-a-kind technologies prove commercially viable that new financing opportunities will open up for both new facilities and facility expansion alike. This could lead to rapid growth in the cellulosic biofuel industry as many companies, in addition to those mentioned above, have announced project plans that have been put on hold until funding or project partners can be found.

B. Advanced Biofuel and Total Renewable Fuel

Under CAA 211(o)(7)(D)(i), EPA has the discretion to reduce the applicable volumes of advanced biofuel and total renewable fuel in the event that the projected volume of cellulosic biofuel production is determined to be below the applicable volume specified in the statute. As described in Section II.A above, we are indeed projecting the volume of cellulosic biofuel production for 2011 at significantly below the statutory applicable volume of 250 million gallons. Therefore, we must consider whether and to what degree to lower the advanced biofuel and total renewable fuel applicable volumes for 2011.

As described in the NPRM, because cellulosic biofuel is used to satisfy both the cellulosic biofuel standard and the advanced biofuel standard, it is possible that a required volume of cellulosic biofuel for a given year that is less than the volume specified in the statute could lead to a situation where there is insufficient volume of advanced biofuels to satisfy the applicable volume of advanced biofuel volume set forth in the statute. However, it is also possible that other advanced biofuels, such biomass-based diesel, sugarcane ethanol, or other biofuels, may be available in sufficient volumes to make up for the shortfall in cellulosic biofuel. We believe that it would be consistent with the energy security and greenhouse gas reduction goals of EISA to use the applicable volume of advanced biofuel set forth in the statute to derive the advanced biofuel standard if there are sufficient volumes of advanced biofuels available, even if those volumes do not include the amount of cellulosic biofuel that Congress may have desired.

If we were to maintain the advanced biofuel, biomass-based diesel, and total renewable fuel volume requirements at the levels specified in the statute, while also lowering the cellulosic biofuel standard to 6.0 million gallons, then 1,206 million gallons of the 1,350 million gallon advanced biofuel mandate would be satisfied automatically through the satisfaction of the cellulosic and biomass based diesel standards. An additional 144 million ethanol-equivalent gallons of additional advanced biofuels would be needed. *See* Table II.B–1.

TABLE II.B–1—PROJECTED FUEL MIX IF ONLY CELLULOSIC BIOFUEL VOLUME IS ADJUSTED IN 2011

[mill gallons]

	Ethanol-equivalent volume	Physical volume
Total renewable fuel	13,950	13,500–13,549
Conventional renewable fuel [a]	12,600	12,600
Total advanced biofuel	1,350	903–951
Cellulosic biofuel	6.0	6.6
Biomass-based diesel	1,200	800
Other advanced biofuel [b]	144	[c] 96–144

[a] Predominantly corn-starch ethanol.
[b] Rounded to nearest million gallons for simplicity.
[c] Physical volume is a range because other advanced biofuel may be ethanol, biodiesel, or some combination of the two.

The most likely sources of additional advanced biofuel would be imported sugarcane ethanol and biodiesel. To determine if there are likely to be sufficient volumes of these biofuels to meet the need for 144 million gallons of other advanced biofuel, we examined historical data on ethanol imports and EIA projections for 2011. For instance, as shown in Table II.B–2 below, recent annual import volumes of ethanol were

higher than what would be needed in 2011.

TABLE II.B–2—HISTORICAL IMPORTS OF ETHANOL (MILL GALLONS) [5]

2007	439
2008	530
2009	194

Brazilian imports have made up a sizeable portion of total ethanol imported into the U.S. in the past, and these volumes were predominantly produced from sugarcane. These historical import volumes demonstrate that Brazil has significant export potential under the appropriate economic circumstances. However, as shown above, ethanol import volumes decreased significantly in 2009. Moreover, they have dropped to nearly zero in the first half of 2010 according to EIA's Short Term Energy Outlook. Some have speculated that this decline in imports is related to the cessation of the duty drawback that became effective on October 1, 2008, and to changes in world sugar prices.[6] However, Brazil is second worldwide in the production of ethanol, reaching about 6.5 billion gallons in 2008.[7] Thus, by establishing an increased U.S. demand for 144 million gallons of other advanced biofuel in 2011, we believe it may once again be economical for Brazilian producers to export at least this volume of sugarcane ethanol to the U.S. Moreover, California's Low Carbon Fuel Standard goes into effect in 2011, and may compel some refiners to import additional volumes of sugarcane ethanol from Brazil into California. These same volumes could count towards the federal RFS2 program as well.

We also examined the potential for excess biodiesel to help meet the need for 144 million gallons of advanced biofuel. The applicable volume of biomass-based diesel established in the statute for 2011 is 800 million gallons (which corresponds to 1,200 ethanol equivalent gallons). As discussed more fully in Section II.C below, we believe that the biodiesel industry has the potential for producing significant volumes above 800 million gallons if demand for such volume exists.

Finally, there are also other potential sources of advanced biofuels that could contribute to compliance with the advanced biofuels standard in 2011, such as diesel fuel additives made from waste cooking oil or restaurant grease. Given all of these potential sources, we believe that there are likely to be sufficient volumes of advanced biofuels such that the advanced biofuel standard need not be lowered below the 1.35 billion gallon level specified in the Act. Thus, we are not reducing the applicable volume of advanced biofuel for 2011.

If we were reducing the applicable volume of advanced biofuel for 2011, it would follow that there could be a shortfall of RINs capable of satisfying the general renewable fuel volume requirements. However, we are not doing so, and thus there is no need to lower the applicable volume of total renewable fuel below the statutory volume of 13.95 billion gallons.

In response to the NPRM, biodiesel producers, advanced biofuel producers, and UNICA (representing importers of sugarcane ethanol) supported our proposal to maintain the applicable volume of advanced biofuel at 1.35 bill gallons for 2011. They generally agreed that there exists sufficient potential sources of advanced biofuel to make up for the reduction of the applicable volume of cellulosic biofuel for 2011, and that the very existence of a demand for this volume will lead these sources to provide sufficient volume to meet that demand. Other commenters, such as refiners and proponents of corn-ethanol, opposed our proposal for leaving the 2011 applicable volume of advanced biofuel at 1.35 bill gallons on the grounds that other sources of advanced biofuel sufficient to make up for the reduction in the applicable volume of cellulosic biofuel were too uncertain.

We disagree with the suggestion that volumes of other advanced biofuels are too uncertain and that the applicable volume of advanced biofuel should be lowered. As described above, we believe that there are sufficient potential sources of other advanced biofuel to make up for the reduction in the applicable volume of cellulosic biofuel. Moreover, our authority to lower the advanced biofuel and/or total renewable fuel applicable volumes is discretionary, and we believe that actions to lower these volumes should only be taken if it appears that insufficient volumes of qualifying biofuel can be made available, based on such circumstances as insufficient production capacity, insufficient feedstocks, competing markets, constrained infrastructure, or the like. Since this is not the case for 2011, we do not believe that the advanced biofuel applicable volume of 1.35 bill gallons or the total renewable fuel applicable volume of 13.95 billion gallons should be reduced.

Although refiners and proponents of corn-ethanol agreed on the treatment of advanced biofuel for 2011, they differed in their views of how the total renewable fuel standard should be treated. Refiners stated that the advanced biofuel standard and the total renewable fuel standard should be lowered in concert and by the same amount. Proponents of corn-ethanol, on the other hand, stated that the total renewable fuel standard of 13.95 bill gal should be maintained while the advanced biofuel standard should be lowered to reflect the projected shortfall. They argued that excess volumes of corn-ethanol were more certain than excess volumes of advanced biofuel, and that their suggested approach would effectively result in a demand for corn-ethanol above 12.6 billion gallons (see Table II.B–1). They further argued that this approach would generate more GHG reductions than if the advanced biofuel and total renewable fuel standards were lowered in concert. One commenter explicitly opposed any changes to the advanced biofuel and total renewable fuel standards that would increase the demand for corn-ethanol under RFS2 above 12.6 billion gallons (see Table II.B–1).

We agree that there is sufficient corn-ethanol production capacity and feedstocks to produce more than 12.6 bill gallons in 2011. Indeed EIA projects that corn-ethanol production in 2010 will exceed 13 billion gallons.[8] However, as described above, we disagree with the suggestion that there is insufficient volume of advanced biofuels to justify maintaining the advanced biofuel applicable volume at the level specified in the statute. Moreover, since there is no need to waive any portion of the advanced biofuel applicable volume, there is likewise no need to consider the possibility of corn ethanol making up for a shortfall in advanced biofuel volumes. As a result, the demand for corn ethanol will not be greater as a result of today's action than it would be if all applicable volumes as specified in the statute were used in deriving the 2011 standards.

C. Biomass-Based Diesel

While the statutory requirement that we project volumes of cellulosic biofuel for next year does not explicitly apply to biomass-based diesel, we must, as

[5] "Monthly U.S. Imports of Fuel Ethanol," EIA, released 4/8/2010.

[6] Lundell, Drake, "Brazilian Ethanol Export Surge to End; U.S. Customs Loophole Closed Oct. 1," Ethanol and Biodiesel News, Issue 45, November 4, 2008.

[7] Renewable Fuels Association (RFA), "2008 World Fuel Ethanol Production," *http://www.ethanolrfa.org/pages/statistics#E,* March 31, 2009.

[8] EIA STEO, September 2010, Table 8.

discussed above, determine whether the required volumes of advanced biofuel and/or total renewable fuel should be reduced at the same time that we reduce the required volume of cellulosic biofuel. The amount of biomass-based diesel that we project can be available directly affects our consideration of adjustments to the volumetric requirements for advanced biofuel and total renewable fuel discussed above in Section II.B.

Although there are a variety of potential fuel types that can qualify as biomass-based diesel, biodiesel is by far the predominant type. To project biodiesel production volumes for 2011, we examined historical and recent production and export rates as well as the production potential of the industry. As shown in Table II.C–1, domestic production of biodiesel in 2007–2009 has ranged from 490 to 678 million gallons.

TABLE II.C–1—HISTORICAL BIODIESEL PRODUCTION, NET EXPORTS, AND CONSUMPTION (MILLION GALLONS)

[*Source:* EIA Monthly Energy Review, August 2010]

	Domestic production	Net exports	Domestic consumption
2007	490	132	358
2008	678	362	316
2009	505	189	315

The variations in production and net exports appear to be correlated to availability of the U.S. tax subsidy that was effective from 2004 to 2009, "splash-and-dash" activities, and European Union (EU) action to impose duties on exported U.S. biodiesel. In splash-and-dash, biodiesel producers took advantage of the U.S. tax credit for biodiesel even though the biodiesel was not consumed in the U.S., instead exporting the biodiesel to Europe. As can be seen in Figure II.C–1, the EU took action beginning in March 2009 to apply duties/tariffs to biodiesel from the U.S. Exports of biodiesel from the U.S., as well as domestic production volumes, immediately fell following this EU action. Production also fell following the expiration of the biodiesel tax credit at the end of 2009.

Figure II.C-1

Monthly Biodiesel Production and Net Exports (million gallons)

(Source: EIA Monthly Energy Review, August 2010)

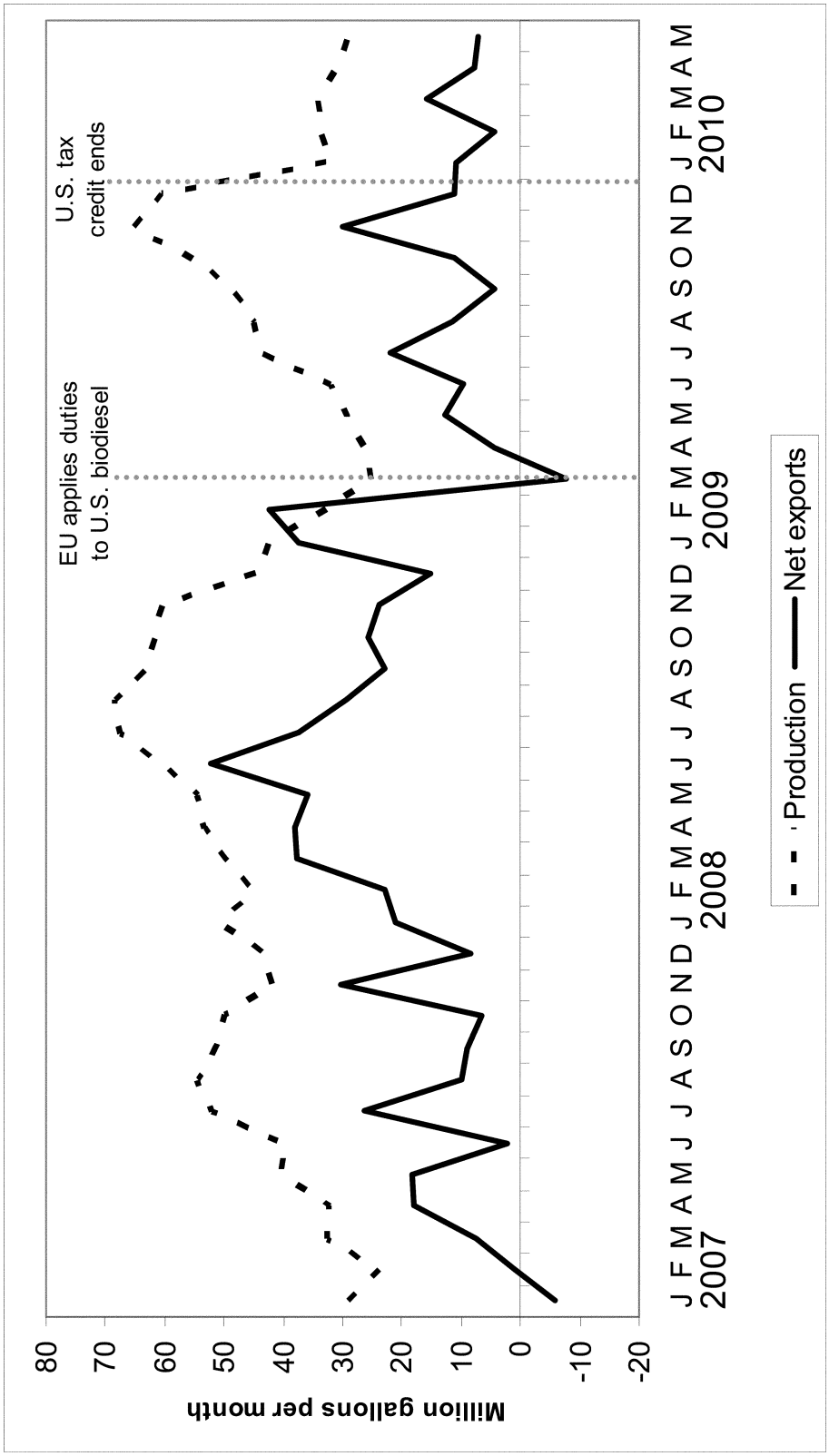

Although biodiesel production appears to have been significantly affected by both the EU tariff on biodiesel from the U.S. and the expiration of the biodiesel tax credit, the fact that the U.S. biodiesel industry has produced higher volumes when it was economic for it to do so suggests that the industry may have the capability to produce greater volumes in the future under the appropriate circumstances. According to information from the biodiesel industry, only 52 biodiesel facilities with a production capacity totalling 600 million gallons have been idled. The total biodiesel production capacity at facilities that are still

operating is 2.4 billion gallons.[9] Ramping up production will require some time and potentially some reinvestment, but based on feedback from industry we nevertheless believe that it can occur in time to meet a production goal of 800 million gallons.

In response to the NPRM, some commenters suggested that the 2011 volume requirement for biomass-based diesel should be lowered because the biodiesel industry is expected to produce insufficient volumes in 2010 to meet the 2009/2010 biomass-based diesel standard based on an applicable volume of 1.15 billion gallons. This, they argued, demonstrates that the biodiesel industry cannot be expected to meet demand of 800 million gallons in 2011. However, for the first five months of 2010, the average production rate was about 32 million gallons per month.[10] If this production rate continued through the rest of 2010, the total annual production of biodiesel would be approximately 380 million gallons. As described in EPA's Question and Answer document,[11] EPA estimated that the 1.15 bill gal standard for biomass-based diesel in 2010 would generate a demand for about 345 mill gallons of qualifying biodiesel and renewable diesel in 2010. The remaining portion of the 1.15 bill gal standard would be met with previous-year RINs. Thus, an annual production volume of 380 million gallons should be sufficient to enable obligated parties to meet the 2010 biomass-based diesel standard if exports are kept to a minimum. In fact net exports of biodiesel have gone down every year since 2008, due in part to fewer cost-effective opportunities for sale of biodiesel in Europe.

Moreover, we do not believe that the activities of the biodiesel industry in 2009 and 2010 are necessarily an appropriate indicator of its potential for 2011. A regulatory mandate for biomass-based diesel did not exist in 2009, and the mandate for biomass-based diesel in 2010 was a unique circumstance that allowed a significant number of 2008 and 2009 biodiesel RINs to be used for compliance in 2010. Current biodiesel production rates actually suggest that the industry is positioned to put idled capacity into production when demand for greater volumes exist. For instance, despite the expiration of the biodiesel tax credit at the end of 2009, monthly domestic consumption of biodiesel was actually higher in the first 5 months of 2010 than it was during the same period in 2009. One possible reason for this is that 2010 was the first year that the biomass-based diesel standard was in effect. Moreover, for the three years prior to 2010, the monthly average production in the second half of the year was higher than in the first half of the year. Thus, although the annual production total for 2010 would be projected to be 380 mill gal based on monthly production rates between January and May, it could be 500 million gallons or more by year's end if production rates increase in the second half of the year as they have done in the past. An increase in monthly biodiesel production rates later in 2010 would also be consistent with the fact that obligated parties are not required to demonstrate compliance with the 2010 biomass-based diesel standard until February 28, 2011. Thus, the presence of a requirement for biomass-based diesel in 2010 seems to be providing the incentive for greater consumption of biodiesel, which in turn is encouraging higher production volumes.

In addition to current production rates, the biodiesel industry's production potential also supports a finding that it can more than satisfy the applicable volume of biomass based diesel specified in the statute for 2011. In July of 2010, over 1.8 billion gallons of production capacity had been registered under the RFS2 program.[12] As of September 2010, the aggregate production capacity of biodiesel plants in the U.S. was estimated at 2.6 billion gallons per year across approximately 170 facilities.[13] Indications from the biodiesel industry are that idled facilities can be brought back into production with a relatively short leadtime. Imports of biodiesel from foreign countries also has the potential to increase the volume available for consumption in the U.S.

Finally, we believe that there will be sufficient sources of qualifying renewable biomass to more than meet the needs of the biodiesel industry in 2011. The largest sources of feedstock for biodiesel in 2011 are expected to be soy oil, canola oil, rendered fats, and potentially some corn oil extracted during production of fuel ethanol, as this technology continues to proliferate. Moreover, comments we received from a large rendering company after the May 2009 RFS2 proposed rule suggest that there will be adequate fats and greases feedstocks to supply biofuels production as well as other historical uses.[14]

In order to meet a 2011 biomass-based diesel volume requirement of 800 million gallons to be consumed in the United States, approximately 725 million gal of biodiesel would need to be consumed. This value accounts for the production of 75 million gallons of renewable diesel at one renewable diesel facility in Geismar, Louisiana, set to begin operations by 2011.[15] Assuming net exports continue at a rate equivalent to that in the first five months of 2010, biodiesel production in the U.S. would need to total approximately 835 million gal in 2011. Based on the modeling used by EIA to project volumes for its Short-Term Energy Outlook, EIA projects that the 800 mill gallon mandate would be binding, and that this level of consumption would be unlikely to occur in the absence of a mandate. However, the biodiesel industry has demonstrated that it is capable of meeting historic demand for biodiesel, and is in a position to produce significantly more than it has in recent years.

Based on our review of current biodiesel production rates, the production potential of the biodiesel industry, and the availability of qualifying feedstocks, we believe that substantially more than the 800 million gallons needed to satisfy the biomass based diesel standard can be produced in 2011. Today's rule therefore includes a final biomass-based diesel standard that, as proposed, is based on the 800 million gallon applicable volume specified in the Act. We also believe that the excess production capacity can be utilized to help satisfy the 2011 advanced biofuel standard we are finalizing today.

In response to the NPRM, several parties supported our proposal to set the 2011 standard based on the 800 million gallon applicable volume specified in the Act. One party requested that we raise the biomass-based diesel standard for 2011 above the 800 million gallon statutory mandate based on the significantly higher production capacity in the industry. However, the statute specifies the applicable volumes of biomass based diesel that we are to use

[9] Plant List from Biodiesel Magazine (*http://www.biodieselmagazine.com/plant-list.jsp.*)

[10] EIA Monthly Energy Review for August 2010, Table 10.4.

[11] *See* question 6.7 in EPA's "Questions and Answers on Changes to the Renewable Fuel Standard Program (RFS2)", *http://www.epa.gov/otaq/fuels/renewablefuels/compliancehelp/rfs2-aq.htm#6.*

[12] Comments from National Biodiesel Board on the July 20, 2010 NPRM. Submitted to docket EPA–HQ–OAR–2010–0133 on August 19, 2010.

[13] Figures taken from National Biodiesel Board's Member Plant List as of September 13, 2010. *http://biodiesel.org/buyingbiodiesel/plants/showall.aspx.*

[14] *See* **Federal Register** v.74 n.99 p.24903. Comments are available in docket EPA–HQ–OAR–2005–0161.

[15] Project status updates are available via the Syntroleum Web site, *http://dynamicfuelsllc.com/wp-news/.*

in setting the annual standards through 2012. We do not have the authority to raise the applicable volume above the level specified in the statute for 2011.

Another commenter requested that the standard for biomass-based diesel should be tied to the biodiesel tax credit and projections of likely consumption in 2011 assuming no mandate. We disagree. Demand for biomass-based diesel will be a function of the RFS standard we set for 2011. The authority provided under CAA 211(o)(7)(A) to waive any portion of the statutory biomass-based diesel volume mandate is limited to cases in which we determine that the mandate would severely harm the economy or environment, or that there is inadequate domestic supply. Under CAA 211(o)(7)(E) we may also order a reduction in required use of biomass based diesel if we find that there is a significant renewable feedstock disruption or other market circumstances that would make the price of biomass-based diesel fuel increase significantly. No commenter has suggested that any of these conditions exist. The expiration of the biodiesel tax credit is, by itself, an insufficient basis for a waiver, and we do not have the authority to waive a portion of the standard based on projections of what demand would be in the absence of a mandate.

III. Percentage Standards for 2011

A. Background

The renewable fuel standards are expressed as a volume percentage, and are used by each obligated party to determine their renewable volume obligations (RVO). Since there are four separate standards under the RFS2 program, there are likewise four separate RVOs applicable to each obligated party. Each standard applies to the sum of all gasoline and diesel produced or imported. The applicable percentage standards are set so that if each regulated party meets the percentages, then the amount of renewable fuel, cellulosic biofuel, biomass-based diesel, and advanced biofuel used will meet the volumes required on a nationwide basis.

As discussed in Section II.A.4, the cellulosic biofuel volume requirement for 2011 is 6.6 million gallons (6.0 million ethanol equivalent gallons). This volume is used as the basis for setting the percentage standard for cellulosic biofuel for 2011. We have also decided that the advanced biofuel and total renewable fuel volumes will not be reduced below the volumes set forth in the statute. The 2011 volumes used to determine the four percentage standards are shown in Table III.A–1.

TABLE III.A–1—VOLUME REQUIREMENTS FOR 2011

	Actual volume	Ethanol equivalent volume
Cellulosic biofuel	6.6 mill gal	6.0 mill gal.
Biomass-based diesel	0.80 bill gal	1.20 bill gal.
Advanced biofuel	1.35 bill gal	1.35 bill gal.
Renewable fuel	13.95 bill gal	13.95 bill gal.

B. Calculation of Standards

1. How Are the Standards Calculated?

The following formulas are used to calculate the four percentage standards applicable to producers and importers of gasoline and diesel (*see* § 80.1405):

$$\mathrm{Std}_{\mathrm{CB,\,i}} = 100\% \times \frac{\mathrm{RFV}_{\mathrm{CB,\,i}}}{(G_i - RG_i) + (GS_i - RGS_i) - GE_i + (D_i - RD_i) + (DS_i - RDS_i) - DE_i}$$

$$\mathrm{Std}_{\mathrm{BBD,\,i}} = 100\% \times \frac{\mathrm{RFV}_{\mathrm{BBD,\,i}} \times 1.5}{(G_i - RG_i) + (GS_i - RGS_i) - GE_i + (D_i - RD_i) + (DS_i - RDS_i) - DE_i}$$

$$\mathrm{Std}_{\mathrm{AB,\,i}} = 100\% \times \frac{\mathrm{RFV}_{\mathrm{AB,\,i}}}{(G_i - RG_i) + (GS_i - RGS_i) - GE_i + (D_i - RD_i) + (DS_i - RDS_i) - DE_i}$$

$$\mathrm{Std}_{\mathrm{RF,\,i}} = 100\% \times \frac{\mathrm{RFV}_{\mathrm{RF,\,i}}}{(G_i - RG_i) + (GS_i - RGS_i) - GE_i + (D_i - RD_i) + (DS_i - RDS_i) - DE_i}$$

Where:

$Std_{CB,i}$ = The cellulosic biofuel standard for year i, in percent.

$Std_{BBD,i}$ = The biomass-based diesel standard (ethanol-equivalent basis) for year i, in percent.

$Std_{AB,i}$ = The advanced biofuel standard for year i, in percent.

$Std_{RF,i}$ = The renewable fuel standard for year i, in percent.

$RFV_{CB,i}$ = Annual volume of cellulosic biofuel required by section 211(o) of the Clean Air Act for year i, in gallons.

$RFV_{BBD,i}$ = Annual volume of biomass-based diesel required by section 211(o) of the Clean Air Act for year i, in gallons.

$RFV_{AB,i}$ = Annual volume of advanced biofuel required by section 211(o) of the Clean Air Act for year i, in gallons.

$RFV_{RF,i}$ = Annual volume of renewable fuel required by section 211(o) of the Clean Air Act for year i, in gallons.

G_i = Amount of gasoline projected to be used in the 48 contiguous states and Hawaii, in year i, in gallons.

D_i = Amount of diesel projected to be used in the 48 contiguous states and Hawaii, in year i, in gallons.

RG_i = Amount of renewable fuel blended into gasoline that is projected to be consumed in the 48 contiguous states and Hawaii, in year i, in gallons.

RD_i = Amount of renewable fuel blended into diesel that is projected to be consumed in the 48 contiguous states and Hawaii, in year i, in gallons.

GS_i = Amount of gasoline projected to be used in Alaska or a U.S. territory in year i if the state or territory opts-in, in gallons.

RGS_i = Amount of renewable fuel blended into gasoline that is projected to be consumed in Alaska or a U.S. territory in year i if the state or territory opts-in, in gallons.

DS_i = Amount of diesel projected to be used in Alaska or a U.S. territory in year i if the state or territory opts-in, in gallons.

RDS_i = Amount of renewable fuel blended into diesel that is projected to be consumed in Alaska or a U.S. territory in year i if the state or territory opts-in, in gallons.

GE_i = The amount of gasoline projected to be produced by exempt small refineries and small refiners in year i, in gallons, in any year they are exempt per §§ 80.1441 and 80.1442, respectively. For 2011, this value is zero. *See* further discussion in Section III.B.2 below.

DE_i = The amount of diesel projected to be produced by exempt small refineries and small refiners in year i, in gallons, in any year they are exempt per §§ 80.1441 and 80.1442, respectively. For 2011, this value is zero. *See* further discussion in Section III.B.2 below.

The four separate renewable fuel standards for 2011 are based in part on the 49-state gasoline and diesel consumption volumes projected by EIA. The projected volumes of gasoline, ethanol, and biodiesel used to calculate the final percentage standards are provided by the EIA's Short-Term Energy Outlook (STEO), while the projected volume of transportation diesel used to calculate the final percentage standards is provided by the most recent Annual Energy Outlook (AEO). In the proposal, we used the March 2010 issue of STEO and the Early Release version of AEO2010. For this final rule, we have used the volumes of transportation fuel provided by EIA under CAA 211(o)(3)(A) in a letter dated October 20, 2010.[16] This letter aggregates volume projections from several EIA sources including the most recently available versions of STEO and AEO. Gasoline and diesel volumes are adjusted in the formulas to account for renewable fuel contained in the STEO and AEO projections. Beginning in 2011, gasoline and diesel volumes produced by small refineries and small refiners will generally no longer be exempt, and thus there is no adjustment to the gasoline and diesel volumes in today's final rule to account for such an exemption. However, as discussed more fully in Section III.B.2 below, depending upon the results of a Congressionally-mandated DOE study, it is possible that the exemption for some small refineries could be extended. In addition, we may extend the exemption for individual small refineries on a case-by-case basis if they demonstrate disproportionate economic hardship. If any small refinery exemptions for 2011 are approved after this final rulemaking, the parties in question would be exempt but we would not intend to modify the applicable percentage standards and announce new standards for 2011. EPA believes the Act is best interpreted to require issuance of a single annual standard in November that is applicable in the following calendar year, thereby providing advance notice and certainty to obligated parties regarding their regulatory requirements. Periodic revisions to the standards to reflect waivers issued to small refineries or refiners would be inconsistent with the statutory text, and would introduce an undesirable level of uncertainty for obligated parties.

As described in the March 26, 2010 RFS2 final rule, the standards are expressed in terms of energy-equivalent gallons of renewable fuel, with the cellulosic biofuel, advanced biofuel, and total renewable fuel standards based on ethanol equivalence and the biomass-based diesel standard based on biodiesel equivalence. However, all RIN generation is based on ethanol-equivalence. More specifically, the RFS2 regulations provide that production or import of a gallon of biodiesel will lead to the generation of 1.5 RINs. In order to ensure that demand for 0.8 billion physical gallons of biomass-based diesel will be created in 2011, the calculation of the biomass-based diesel standard provides that the required volume be multiplied by 1.5 under the assumption that biodiesel will predominate the biomass-based diesel market. The net result is that a physical gallon of biodiesel will be worth 1.0 gallons toward the biomass-based diesel standard, but worth 1.5 gallons toward the other standards.

The levels of the percentage standards would be reduced if Alaska or a U.S. territory chooses to participate in the RFS2 program, as gasoline and diesel produced in or imported into that state or territory would then be subject to the standard. Neither Alaska nor any U.S. territory has chosen to participate in the RFS2 program at this time, and thus the value of the related terms in the calculation of the standards is zero.

Note that the equation's terms for projected volumes of gasoline and diesel use include gasoline and diesel that has been blended with renewable fuel. In the equation, the total renewable fuel volume is subtracted from the total gasoline and diesel volume to get total non-renewable gasoline and diesel volumes (because the gasoline and diesel volumes provided by EIA include renewable fuel use), The values of the equation variables for 2011 are shown in Table III.B.1–1.[17] Terms not included in this table have a value of zero.

TABLE III.B.1–1—VALUES FOR TERMS IN CALCULATION OF THE STANDARDS (BILL GAL)

Term	Value
$RFV_{CB,2011}$	0.006
$RFV_{BBD,2011}$	0.80
$RFV_{AB,2011}$	1.35
$RFV_{RF,2011}$	13.95
G_{2011}	139.07
D_{2011}	49.21
RG_{2011}	13.45
RD_{2011}	0.71

Using the volumes shown in Table III.B.1–1, we have calculated the percentage standards for 2011 as shown in Table III.B.1–2.

[16] Letter from Richard Newell, EIA Administrator to Lisa Jackson, EPA Administrator.

[17] To determine the 49-state values for gasoline and diesel, the amounts of these fuels used in Alaska is subtracted from the totals provided by DOE. The Alaska fractions are determined from the most recent (2008) EIA State Energy Data, Transportation Sector Energy Consumption Estimates. The gasoline and distillate fuel oil fractions are approximately 0.2% and 0.7%, respectively. Ethanol use in Alaska is estimated at 5% of its gasoline consumption (based on the same State data), and biodiesel use is assumed to be zero.

TABLE III.B.1–2—PERCENTAGE STANDARDS FOR 2011

	Percent
Cellulosic biofuel	0.003
Biomass-based diesel	0.69
Advanced biofuel	0.78
Renewable fuel	8.01

2. Small Refineries and Small Refiners

In CAA section 211(o)(9), enacted as part of EPAct, Congress provided a temporary exemption to small refineries (those refineries with a crude throughput of no more than 75,000 barrels of crude per day) through December 31, 2010. In RFS1, we exercised our discretion under section 211(o)(3)(B) and extended this temporary exemption to the few remaining small refiners that met the Small Business Administration's (SBA) definition of a small business (1,500 employees or less company-wide) but did not meet the statutory small refinery definition as noted above. Because EISA did not alter the small refinery exemption in any way, the RFS2 program regulations exempt gasoline and diesel produced by small refineries and small refiners in 2010 from the renewable fuels standard (unless the exemption was waived). *See* 40 CFR § 80.1441.

Under the RFS program, Congress has provided two ways that small refineries can receive an extension of the temporary exemption beyond 2010. One is based on the results of a study conducted by the Department of Energy (DOE) to determine if small refineries would face a disproportionate economic hardship under the RFS program. The other is based on EPA evaluation of claims of disproportionate economic hardship, the DOE study, and other economic factors on a case-by-case basis in response to small refinery petitions.

In January 2009, DOE issued a *Small Refineries Exemption Study* which did not find that small refineries would face a disproportionate economic hardship under the RFS program. The conclusions were based in part on the expected robust availability of RINs; DOE further noted that, if the RIN market were to change, individual refineries still have a statutory right to apply for relief on a case-by-case basis. Subsequently, the Senate Appropriations Committee "directed [DOE] to reopen and reassess the Small Refineries Exemption Study by June 30, 2010," listing a number of factors that the Committee intended DOE to consider in the revised study. The Final Conference Report to the Energy & Water Development Appropriations Act added that the conferees "support the study requested by the Senate on RFS and expect the Department to undertake the requested economic review." DOE was directed to complete a reassessment and issue a revised report by June 30, 2010. A revised study had not been issued at the time of the RFS2 final rulemaking, or at the time of this writing.

We have received three petitions from small refineries requesting an extension of their exemption from the RFS2 requirements. In evaluating these petitions, EISA requires that EPA "* * * consider the findings of the [DOE] study * * * and other economic factors." Although the DOE study issued in January 2009 would satisfy the statutory requirement that we consider the DOE study before acting, we believe that our evaluation of these three petitions will be better informed if we consider the findings of the forthcoming revised DOE study. Since the revised study is not yet available, we have assumed that all small refineries and small refiners will be subject to the RFS2 standards in 2011 for the purposes of calculating those standards. If, subsequent to announcing the 2011 standards, we make a determination that one or more hardship petitions should be approved, we do not intend to revise the 2011 standards applicable to other obligated parties to require that they make up for volumes that will not be attained by the exempt refineries.

We received only three comments on the treatment of small refineries in the RFS2 program, and all supported the inclusion of small refineries and small refiners as obligated parties beginning in 2011. API additionally requested that any consideration of extending the exemption for any small refinery into 2011 also take into account the impact that such an action would have on other refineries, specifically with regard to the ethanol blendwall. However, we do not believe that the extension of any small refinery exemptions into 2011 will have a significant impact on the ethanol blendwall. Since the total volume of renewable fuel required under RFS2 is the same regardless of whether any small refineries are exempt or not, such exemptions will have no impact on the relative volumes of ethanol and gasoline in the nationwide transportation fuels market. Thus, the timing of the onset of the nationwide blendwall will not be affected by any small refinery exemptions. We do recognize that any exemption for a small refinery will result in a proportionally higher percentage standard for remaining obligated parties, and that this will affect the degree to which individual obligated parties can acquire sufficient RINs for compliance through blending ethanol into gasoline that they produce. This may be of particular concern to obligated parties whose gasoline production volume is higher than the volume of gasoline that they market, since such parties may have fewer opportunities to blend renewable fuels into their own gasoline and diesel. In such cases, obligated parties also have the option of marketing E85 for use in FFVs, extending their operations to include more gasoline marketing, or purchasing RINs on the open market.

IV. Cellulosic Biofuel Technology Assessment

In projecting the volumes of cellulosic biofuel for 2011, we conducted a technical assessment of the production technologies that are under consideration by the broad universe of companies we investigated. Many of these companies are still in the research phase, resolving outstanding issues with specific technologies, and/or in the design phase to implement those technologies for the production of commercial-scale volumes of cellulosic biofuel. A subset of the companies we investigated have moved beyond the research and design phase and are actively preparing for production. This smaller group of companies formed the basis for our projection of potential 2011 volumes of cellulosic biofuel.

This section discusses the full range of cellulosic biofuel technologies being considered among producers, with reference to those individual companies that are focusing on each technology and those we project will be most likely to use those technologies to produce cellulosic biofuel in 2011.

A. What pathways are currently valid for the production of cellulosic biofuel?

In determining the appropriate volume of cellulosic biofuel on which to base the percentage standard for 2011, it is important to consider the ability of the biofuel to generate cellulosic RINs under the RFS2 program. As of this writing, there are three valid pathways available as shown in Table IV.A–1 below.

TABLE IV.A–1—CELLULOSIC BIOFUEL PATHWAYS FOR USE IN GENERATING RINS

Fuel type	Feedstock	Production process requirements	D–Code
Ethanol	Cellulosic Biomass from crop residue, slash, pre-commercial thinnings and tree residue, annual covercrops, switchgrass, and miscanthus; cellulosic components of separated yard waste; cellulosic components of separated food waste; and cellulosic components of separated MSW.	Any	3 (cellulosic biofuel).
Cellulosic Diesel, Jet Fuel and Heating Oil.	Cellulosic Biomass from crop residue, slash, pre-commercial thinnings and tree residue, annual covercrops, switchgrass, and miscanthus; cellulosic components of separated yard waste; cellulosic components of separated food waste; and cellulosic components of separated MSW.	Any	7 (cellulosic diesel).
Cellulosic Naphtha	Cellulosic Biomass from crop residue, slash, pre-commercial thinnings and tree residue, annual covercrops, switchgrass, and miscanthus; cellulosic components of separated yard waste; cellulosic components of separated food waste; and cellulosic components of separated MSW.	Fischer-Tropsch process.	3 (cellulosic biofuel).

Of the five facilities that we currently believe could contribute to the volume of commercially available cellulosic biofuel in 2011, four would produce alcohols from cellulosic biomass and one would produce diesel from cellulosic biomass. None of the facilities we have evaluated would produce cellulosic naphtha through a Fischer-Tropsch process. In 2011 the primary biofuel Range fuels has indicated will be produced from their facility is methanol. While there is currently no pathway for cellulosic methanol to generate RINs, Range has engaged EPA in discussion regarding the addition of a pathway for cellulosic methanol.

Two of the facilities shown in Table II.A.4–1, KL Energy and Range Fuels, intend to use wood as the primary feedstock. The only types of wood that are currently allowed as a valid feedstock are those derived from various types of waste. If either of these two companies choose to use trees from a tree plantation instead of qualifying waste wood, its pathway would not fall into the any of the pathways currently listed in Table 1 to § 80.1426. However, as described more fully in Section V.A, we are currently evaluating the lifecycle GHG impacts of biofuel made from pulpwood, including wood from tree plantations. If such a pathway is determined to meet the 60% GHG threshold required for cellulosic biofuel, it will be added to Table 1 to § 80.1426 and producers can then make use of it to generate cellulosic RINs.

As described in Section II.A, Range Fuels will begin making predominantly methanol, and no approved pathway currently exists under the RFS program to generate RINs for methanol. However, Range has been in discussions with EPA concerning a petition under § 80.1416 for the generation of RINs for methanol made from woody biomass as well as the generation of cellulosic RINs for the portion of biodiesel made from cellulosic methanol. These pathways are similar to pathways we have modeled in the past. For the purposes of projecting cellulosic volumes for 2011, we believe that the methanol from Range Fuels has the potential for being approved for generation of cellulosic RINs and is therefore appropriate for being included in the volumes that we believe are potentially attainable in 2011.

B. Cellulosic Feedstocks

Cellulosic biofuel technologies are different from other biofuel technologies because they convert the cellulose and other very difficult to convert compounds into biofuels. Unlike grain feedstocks where the major carbohydrate is starch (very simply combined sugars), lignocellulosic biomass is composed mainly of cellulose (40–60%) and hemicellulose (20–40%).[18] Cellulose and hemicellulose are made up of sugars linked together in long chains called polysaccharides. Once hydrolyzed, they can be fermented into ethanol. The remainder of cellulosic feedstocks consists primarily of lignin, a complex polymer which serves as a stiffening and hydrophobic (water-repelling) agent in cell walls. Currently, lignin cannot be fermented into ethanol, but could be burned as a by-product to generate electricity. Thermochemical, pyrolysis and depolymerization processing, however, can convert some or even most of the lignin, in addition to the cellulosic and hemicellulose, into biofuels.

C. Emerging Technologies

When evaluating the array of biofuel technologies which could produce one or more fuels from cellulosic feedstocks that could qualify under RFS2, we found that it is helpful to organize them into fuel technology categories. Organizing them into categories eases the task of understanding the technologies, and also simplifies our evaluation of these technologies because similar technologies likely have similar cost and lifecycle impacts. The simplest organization is by the fuel produced. However, we frequently found that additional subdivisions were also helpful. Table IV.C–1 provides a list of technologies, the fuels produced, and a list of many of the companies which we learned are pursuing the technology (or something very similar to the technology listed in the category). EPA is currently tracking the progress of more than 100 cellulosic biofuel projects, many of which are not listed in the following table. The inclusion of a specific company in the table or technical discussion that follows should not be interpreted as an endorsement of the listed company. The cellulosic biofuel industry continues to progress at a rapid pace and many companies not listed in this assessment may still produce significant volumes of cellulosic fuel in future years.

[18] DOE. "Biomass Program: ABC's of Biofuels". Accessed at: *http://www1.eere.energy.gov/biomass/abcs_biofuels.html#content.*

TABLE IV.C–1—LIST OF TECHNOLOGY CATEGORIES, THE FUELS PRODUCED THROUGH EACH TYPE OF TECHNOLOGY, AND THE COMPANIES PURSUING THEM

Technology category	Technology	Fuels produced	Companies
Biochemical	Enzymatic Hydrolysis	Ethanol	Abengoa, AE Fuels, DuPont Danisco, Florida Crystals, Gevo, Poet, ICM, Iogen, BPI, Energy, Fiberight, KL Energy.
	Acid Hydrolysis	Ethanol	Agresti, Arkenol, Blue Fire, Pencor, Pangen, Raven Biofuels.
	Dilute Acid, Steam Explosion of Cellulose.	Ethanol	Verenium, BP, Central Minnesota Ethanol Coop.
	Consolidated Bioprocessing (one step hydrolysis and fermentation) of Cellulose.	Ethanol	Mascoma, Qteros.
	Conversion of Cellulose via carboxylic acid.	Ethanol, Gasoline, Jet Fuel, Diesel Fuel.	Terrabon, Swift Fuels.
	One step Conversion of Cellulose to distillate.	Diesel, Jet Fuel or Naphtha	Bell Bioenergy, LS9.
Thermochemical	Thermochemical/Fischer Tropsch.	Diesel Fuel and Naphtha	Choren, Flambeau River Biofuels, Baard, Clearfuels, Gulf Coast Energy, Rentech, TRI, Nature's Fuel.
	Thermochemical/Fischer Tropsch.	DME	Chemrec, New Page.
	Thermochemical/Catalytic conversion of syngas to alcohols.	Ethanol	Range Fuels, Pearson Technologies, Fulcrum Bioenergy, Enerkem, and Gulf Coast Energy.
Hybrid	Thermochemical w/Biochemical catalyst.	Ethanol	Coskata, INEOS Bio, Lanzatech.
	Acid Hydrolysis of cellulose to intermediate; hydrogenation using Thermochemical syngas from non-cellulose fraction.	Ethanol, Other alcohols	Zeachem.
Depolymerization	Catalytic Depolymerization of Cellulose.	Diesel, Jet Fuel or Naphtha	Cello Energy, Covanta, Green Power.
	Pyrolysis of Cellulose	Diesel, Jet Fuel, or Gasoline	Envergent (UOP/Ensyn), Dynamotive, Petrobras, Univ. of Mass, KIOR.
Other	Catalytic Reforming of Sugars from Cellulose.	Gasoline	Virent.

Of the technologies listed above, many of them are considered to be "second generation" biofuels or new biofuel technologies capable of meeting either the advanced biofuel or cellulosic biofuel RFS standard. The following sections describe specific companies and the new biofuel technologies which the companies have developed or are developing. This summary is not meant to be a comprehensive list of all new biofuel technologies, but rather a description of some of the more prominent of the new biofuel technologies that serve to provide a sense of the technology categories listed above. The process technology summaries are based on information provided by the respective companies. EPA has not been able to confirm all of the information, statements, process conditions, and the process flow steps necessary for any of these processes and companies.

1. Biochemical

Biochemical conversion refers to a broad grouping of processes that use biological organisms to convert cellulosic feedstocks into biofuels. While no two processes are identical, many of these processes follow a similar basic pathway to convert cellulosic materials to biofuel. The general process of most biochemical cellulosic biofuel processes consists of five main steps: Feedstock handling, pretreatment, hydrolysis, fermentation/fuel conversion, and distillation/separation. The feedstock handling step reduces the particle size of the incoming feedstock and removes any contaminants that may negatively impact the rest of the process. In the pretreatment step the structure of the lignin and hemicellulose is disrupted, usually using some combination of heat, pressure, acid, or base, to allow for a more effective hydrolysis of the cellulosic material to simple sugars. In the hydrolysis stage the cellulose and any remaining hemicellulose is converted into simple sugars, usually using an enzyme or strong acid. In the fermentation or fuel conversion step, the simple sugars are converted to the desired fuel by a biological organism. In the final step the fuel that is produced is separated from the water and other byproducts by distillation or some other means. A basic diagram of the biochemical conversion process can be found in Figure IV.C.1–1 below.

BILLING CODE 6560–50–P

Figure IV.C.1-1[19]

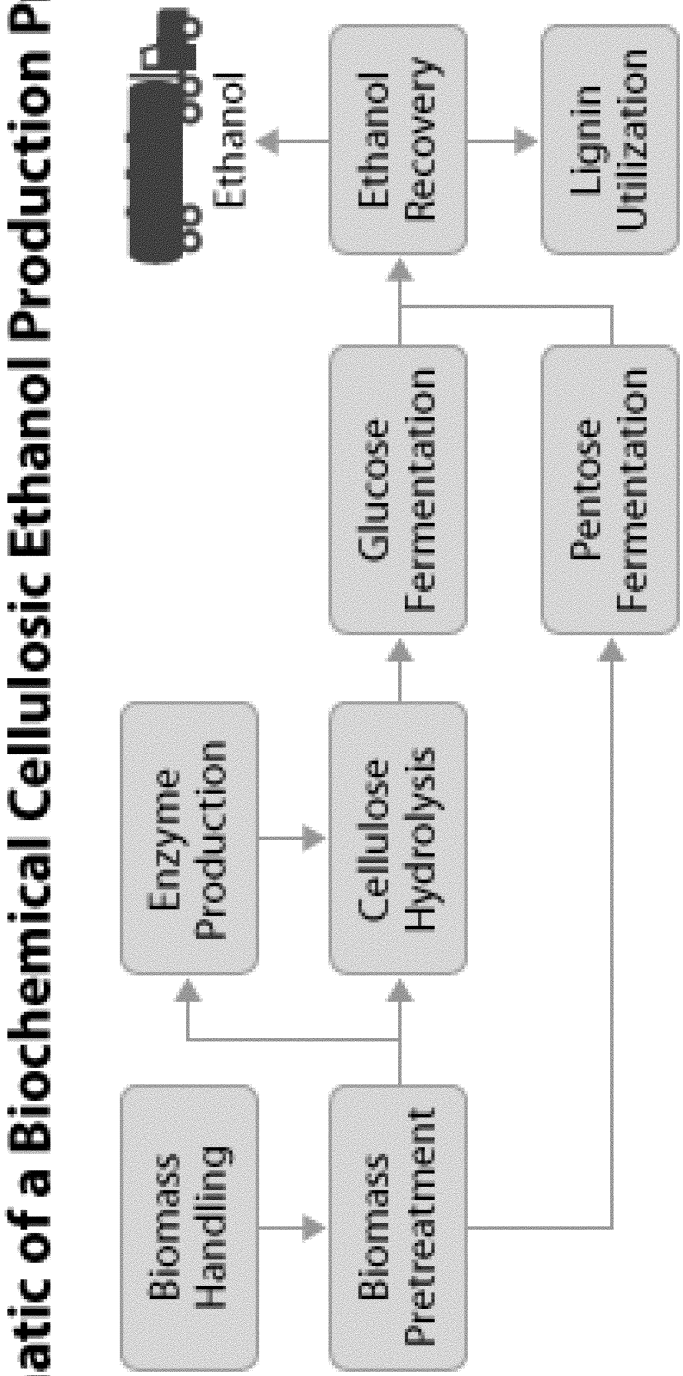

BILLING CODE 6560–50–C

While this diagram shows the production of ethanol from cellulosic biomass, it is possible to use the same process to produce other fuels or specialty chemicals using different biological organisms.

The following sections will discuss each of these steps in greater detail, some of the variations to this general process, and some of the advantages and disadvantages of the biochemical process of producing biofuel from cellulosic materials as compared to other fuel production processes.

Three of the five companies that EPA believes may produce cellulosic biofuel in 2011 plan to use a biochemical process to produce biofuels. All three of these companies, Dupont Danisco Cellulosic Ethanol, Fiberight, and KL energy, all plan to use an enzymatic hydrolysis. One of the biggest appeals of the biochemical pathway is the relatively low capital costs of these projects compared to other cellulosic biofuel facilities. Biochemical projects are also less dependent on economies of scale for profitability, making smaller and less capital intensive commercial facilities more feasible.

a. Feedstock Handling

The first step of the biochemical conversion process is to insure that the biomass stream can be utilized by the rest of the conversion process. This most often takes the form of size reduction, either by grinding or chipping as appropriate for the type of biomass. While this is a relatively simple process it is essential to allow the following steps of the process to function as designed. It is also a potentially energy intensive process. It may be possible for biofuel producers to purchase cellulosic material that is already of the appropriate size, however we believe that in the near term this is unlikely and most biofuel producers will have to invest in equipment to reduce the size of the material they receive as needed for their process. In coming years, as the market for cellulosic materials expands, purchasing feedstock that has already been ground or chipped may be possible and cost effective, as these processes increase the density of this material and may reduce transportation costs. While this may provide financial benefits for the cellulosic biofuel producer, it will not impact the lifecycle green house gas emissions of the process.

In addition to size reduction, steps must also be taken to remove any material from the feedstock that might be detrimental to the fuel production process. Contaminants in the feedstock, such as dirt, rocks, plastics, metals, and other non-biogenic materials, would at best travel through the fuel production process unchanged, resulting in reduced fuel production capacity. Depending on the type of contaminant they may also be converted to undesired byproducts that must be separated from the fuel. They could also be toxic to the biological organisms being used to convert the sugars to fuel, necessitating a shut down and restart of the plant. Any of these scenarios would result in a significant cost to the fuel producer. Feedstocks such as agricultural residues, wood chips, or herbaceous or woody energy crops are likely to contain far fewer contaminants than more heterogeneous feedstocks such as municipal solid waste (MSW).

b. Biomass Pretreatment

The purpose of the biomass pretreatment stage is to disrupt the structure of the cellulosic biomass to allow for the hydrolysis of the cellulose and hemicellulose into simple sugars. The ideal pretreatment stage would allow for a high conversion of the cellulose and hemicellulose to simple sugars, minimize the degradation of these sugars to undesired forms that reduce fuel yields and inhibit fermentation, not require especially large or expensive reaction vessels, and be a relatively robust and simple process. No single biomass pretreatment method has yet been discovered that meets all of these goals, but rather a variety of options are being used by various cellulosic fuel producers, each with their own strengths and weaknesses. Dilute acid pretreatment and alkaline pretreatment are two methods currently being used that attack the hemicellulose and lignin portions of the cellulosic biomass respectively. Other methods, such as steam explosion and ammonia fiber expansion, seek to use high temperature and pressure, followed by rapid decompression to disrupt the structure of the cellulosic biomass and allow for a more efficient hydrolysis of the cellulose and hemicellulose to simple sugars. Each of these methods is discussed in more detail in a technical memo that has been added to the docket.[20] The cost and characteristics of the cellulosic feedstock being processed is likely to have a significant impact on the pretreatment process that is used.

c. Hydrolysis

In the hydrolysis step the cellulose and any remaining hemicellulose are converted to simple sugars. There are two main methods of hydrolysis: acid hydrolysis and enzymatic hydrolysis. Acid hydrolysis is the oldest technology for the conversion of cellulosic feedstock to ethanol and can only be used following an acid pretreatment process. An alternative method is to use a combination of enzymes to perform the hydrolysis after the biomass has been pretreated. This process is potentially more effective at hydrolyzing pretreated biomass but in the past has not been economically feasible due to the prohibitively high cost of the enzymes. The falling cost of these enzymes in recent years has made the production of cellulosic biofuels using enzymatic hydrolysis possible. The lignin is largely unaffected by the hydrolysis and fuel production steps but is carried through these processes until it is separated out in the fuel separation step and burned for process energy or sold as a co-product.

i. Acid Hydrolysis

Acid hydrolysis is a technique that has been used for over 100 years to convert cellulosic feedstocks into fuels. In the acid hydrolysis process the lignin and cellulose portions of the feedstock that remain after the hemicellulose has been dissolved, hydrolyzed, and separated during the dilute acid pretreatment process is treated with a second acid stream. This second acid treatment uses a less concentrated acid than the pretreatment stage but at a higher temperature, as high as 215 °C. This treatment hydrolyzes the cellulose into glucose and other six-carbon sugars that are then fed to biological organisms to produce the desired fuel. It is necessary to hydrolyze the hemicellulose and cellulose in two separate steps to prevent the conversion of the pentose sugars that result from the hydrolysis of the hemicellulose from being further converted into furfural and other chemicals. This would not only reduce the total production of sugars from the cellulosic feedstock, but also inhibit the production of fuel from the sugars in later stages of the process.

The acidic solution containing the sugars produced as a result of the hydrolysis reaction must also be treated so that this stream can be fed to the biological organisms that will convert these sugars into fuel. In order to operate an acid hydrolysis process cost effectively the acid must be recovered, not simply neutralized. Methods currently being used to recover this acid include membrane separation and continuous ion exchange. The advantages of using an acid hydrolysis are that this process is well understood

[20] Wyborny, Lester. "In-Depth Assessment of Advanced Biofuels Technologies." Memo to the docket, November 17, 2010.

and capable of producing high sugar yields from a wide variety of feedstocks. Capital costs are high however, as materials compatible with the acidic streams must be extensively utilized. The high temperatures necessary for acid hydrolysis also result in considerable energy costs.

ii. Enzymatic Hydrolysis

The enzymatic hydrolysis process uses enzymes, rather than acids, to hydrolyze the cellulose and any remaining hemicellulose from the pretreatment process. This process is much more versatile than the acid hydrolysis and can be used in combination with any of the pretreatment processes described above, provided that the structure of the lignocellulosic feedstock has been disrupted enough to allow the enzymes to easily access the hemicellulose and cellulose. After the feedstock has gone through pretreatment a cocktail of cellulose enzymes is added. These enzymes can be produced by the cellulosic biofuel producer or purchased from enzyme producers such as Novozymes, Genencor, and others. The exact mixture of enzymes used in the enzymatic hydrolysis stage can vary greatly depending on which of the pretreatment stages is used as well as the composition of the feedstock.

The main advantages of the enzymatic hydrolysis process are a result of the mild operating conditions. Because no acid is used, special materials are not required for the reaction vessels. Enzymatic hydrolysis is carried out at relatively low temperatures, usually around 50° C, and atmospheric pressure and therefore has low energy requirements. These conditions also result in less undesired reactions that would reduce the production of sugars and potentially inhibit fuel production. Enzymatic hydrolysis works best with a uniform feedstock, such as agricultural residues or energy crops, where the concentration and combination of enzymes can be optimized for maximum sugar production. If the composition of the feedstock varies daily, as can be the case with fuel producers utilizing MSW or other waste streams, or even seasonally, it will be more difficult to ensure that the correct enzyme cocktail is being used to carry out the hydrolysis as efficiently as possible. The main hurdle to using an enzymatic hydrolysis has been and continues to be the costs of the enzymes. Recent advances by companies that produce enzymes for the hydrolysis of cellulosic materials have resulted in a drastic cost reduction of these enzymes. If, as many researchers and cellulosic biofuel producers expect, the cost of these enzymes continues to fall it is likely that enzymatic hydrolysis will be a lower cost option than acid hydrolysis.

d. Fuel Production

After the cellulosic biomass has been hydrolyzed to simple sugars, this sugar solution is converted to fuel by biological organisms. In some biochemical fuel production processes the sugars produced from the fermentation of the hemicellulose, which are mainly five-carbon sugars, are converted to fuel in a separate reactor and with a different set of organisms than the sugars produced from the cellulose hydrolysis, which are mainly six-carbon sugars. Others processes, however, produce fuel from the five and six-carbon sugars in the same reaction vessel.

A wide range of biological organisms can be used to convert the simple sugars into fuel. These include yeasts, bacteria, and other microbes, some of which are naturally occurring and others that have been genetically modified. The ideal biological organism converts both five and six-carbon sugars to fuel with a high efficiency, is able to tolerate a range of conditions, and is adaptable to process sugar streams of varying compositions that may result from variations in feedstock. Many cellulosic biofuel producers have their own proprietary organism or organisms optimized to produce the desired fuel from their unique combination of feedstock, pretreatment and hydrolysis processes, and fuel conversion conditions. Other cellulosic fuel producers license these organisms from biotechnology companies who specialize in their discovery and production.

The different biological organisms being considered for cellulosic biofuel production are capable of producing many different types of fuels. Most cellulosic biofuel producers are working with organisms that produce ethanol. In many ways this is the simplest fuel to produce from lignocellulosic biomass as the production of ethanol from simple sugars is a well understood process. Others intend to produce butanol or other alcohols that have higher energy content. Butanol has the potential to be blended into gasoline in greater concentrations than ethanol and therefore has a potentially greater market as well as value due to its higher energy content. Yields for butanol, however, are currently lower per ton of feedstock than ethanol.

Other cellulosic biofuel producers intend to produce hydrocarbon fuels very similar to gasoline, diesel, and jet fuel. These fuels command a higher price than alcohols, have a greater energy density, and can potentially be blended into conventional gasoline and diesel for use in any conventional vehicles without strict blending limits. They could also be transported by existing pipelines and utilize the same infrastructure as the petroleum industry. Some of the processes being researched by fuel producers result in a single compound, such as iso-octane, that would need to be blended into petroleum gasoline in order to be used as transportation fuel, while others produce a range of hydrocarbons very similar to those found in gasoline or diesel fuel refined from petroleum and could potentially be used in conventional vehicles without blending. The yields of fuel produced by these organisms through biochemical processes are currently significantly lower than those processes that produce ethanol and other alcohols.

e. Fuel Separation

In the fuel separation stage the fuel produced is separated from the water, lignin, any un-reacted hemicellulose and cellulose, and any other compounds remaining after the fuel production stage. The complexity of this stage is highly dependent on the type of fuel produced. For processes producing hydrocarbon fuels this stage can be as simple as a settling tank, where the hydrocarbons are allowed to float to the top and are removed. Recovering the ethanol is a much more difficult task. To recover the ethanol, a distillation process, nearly identical to that used in the grain ethanol industry, is used. The ethanol solution is first separated from the solids before being sent to a distillation column called a beer column. The overheads of the beer column are fed to a second distillation column, called a rectifier for further separation. The rectifier produces a stream with an ethanol content of approximately 96%. A molecular sieve unit is then used to dehydrate this stream to produce fuel grade ethanol with purity greater than 99.5%. Gasoline, natural gasoline, or some other approved denaturant is then added to the ethanol before the fuel is stored. After the fuel has been recovered the remaining lignin and solids are dried and either burned on site to provide process heat and electricity or sold as a byproduct of the fuel production process. The waste water is either recycled or sent to a water treatment facility.

The distillation of ethanol is a very energy intensive process and new technologies, such as membrane separation, are being developed that

could potentially reduce the energy intensity, and thus the cost, of the ethanol dehydration process.

f. Process Variations

While the process described above outlines the general biochemical process used by many cellulosic biofuel producers, there are several prominent variations being pursued. These variations usually seek to simplify the biochemical fuel production process by combining several steps into a single step or using other means to reduce the capital or operating costs of the process. Simultaneous Saccharification and Fermentation (SSF), Simultaneous Saccharification and Co-Fermentation (SSCF), Consolidated Bio-Processing (CBP), and Single Step Fuel Production are all production methods being developed by various biofuel production companies to combine two or more of the steps outlined above. These process variations are discussed in more detail in the aforementioned technical memo to the docket. These modifications are usually enabled by a proprietary technology or biological organism that makes these changes possible.

g. Current Status of Biochemical Conversion Technology

The biochemical cellulosic fuel production industry is currently transitioning from an industry consisting mostly of small scale research and optimization focused facilities to one capable of producing fuel at a commercial scale. Companies such as Iogen, DuPont Danisco Cellulosic Ethanol, Fiberight and KL Energy are just beginning to market the fuel they are producing at their first small scale commercial fuel production facilities. Many other facilities, including some large scale facilities capable of producing tens of millions of gallons of fuel are planned to come online starting in 2012 and in the following years.

There are many factors that are likely to continue to drive the expansion of the cellulosic biofuel industry. The mandates put into place by the RFS2 program have created a demand for cellulosic biofuels, and higher crude oil prices can also make cellulosic biofuels more economically attractive. The biochemical production process also has several important benefits including relatively low capital costs, highly selective fuel production, and flexibility in the type of fuel produced.

While the poor worldwide economy and tight credit markets has had a negative impact on the biofuel industry as a whole, the cellulosic biofuel producers utilizing biochemical processes have not been as hard hit as many others in the industry. This is partially due to the relatively low capital costs of biochemical production plants as a result of the relative simplicity and mild operating conditions of these plants. Several companies have been able to purchase distressed grain ethanol plants and are in the process of modifying them to produce cellulosic ethanol, further reducing the capital costs of their initial facilities. Another advantage that biochemical processes have over other cellulosic fuel production processes is their high selectivity in the fuels they produce. Unlike chemical catalysts, which often produce a range of products and byproducts, biological organisms often produce a single type of fuel, which leads to very high fuel production rates per unit of sugar. Finally, there is a potential to further decrease the production costs of cellulosic biofuels using biochemical processes. Unlike other production methods such as gasification which are relatively mature technologies, biochemical production of fuels from cellulosic feedstock is a young technology. One of the major costs of the biochemical fuel production processes currently are the enzymes. Great strides have been made recently in reducing the cost of these enzymes, and as the price of enzymes continues to fall so will the operating costs of biochemical fuel production processes.

h. Path to Commercialization

While there are many promising qualities of the biochemical fuel production process, we have identified several different aspects of the process which can be further improved. The pretreatment process can be improved to speed the conversion of cellulose and hemicellulose to simple sugars and to minimize the production of other undesired compounds, especially those that may inhibit the fuel production process. The ability of the biological fuel production organisms to process a wide range of both five and six carbon sugars can also be improved. Both these improvements will increase the fuel yield per ton of cellulosic feedstock, reducing the operating costs of the process. Finally, the enzyme production process can be further optimized, which would lower the price for enzymes and improve the economics of hydrolyzing cellulose to sugars.

Another opportunity for improvement would be the profitable utilization of the lignin portion of the cellulosic feedstock. Unlike some of the other cellulosic biofuel production processes, the biochemical process does not convert the lignin to fuel. Cellulosic feedstock can contain up to 40% lignin, depending on the type of feedstock used, so the effective utilization of this lignin is an important component of the profitability of the biochemical process. One option for the use of the lignin is to burn it to provide process heat and electricity, as well as excess electricity to the grid. While this would provide value for the lignin, it would require fairly expensive boilers and turbines that increase the capital cost of the facility. If the lignin cannot be used as part of the fuel production process it may be able to be marketed as a solid fuel with high energy density and low carbon intensity.

These various improvements to cellulosic biofuel plants would make biochemical processes more cost-competitive with petroleum and other cellulosic biofuels. For more details on the potential cost impacts of these improvements, see the aforementioned technical memo which has been added to the docket of this rule.

2. Thermochemical

Thermochemical conversion involves biomass being broken down into syngas (primarily CO and H_2) using heat and upgraded to fuels using a combination of heat and pressure in the presence of catalysts.[21] For generating the syngas, thermochemical processes partially oxidize biomass in the presence of a gasifying agent, usually air, oxygen, and/or steam. It is important to note that these processing steps are also applicable to other feedstocks (*e.g.,* coal or natural gas); the only difference is that a renewable feedstock is used (*i.e.,* biomass) to produce cellulosic biofuel. The cellulosic biofuel produced can be mixed alcohols, an optimized process to produce only one alcohol such as ethanol, or it can be diesel fuel and naphtha. A thermochemical unit can also complement a biochemical processing plant to enhance the economics of an integrated biorefinery by converting lignin-rich, non-fermentable material left over from high-starch or cellulosic feedstocks conversion.[22] Compared to corn ethanol or biochemical cellulosic ethanol plants, the use of biomass gasification may allow for greater flexibility to utilize different biomass feedstocks at a

[21] US. DOE. Technologies: Processing and Conversion. Accessed at: *http://www1.eere.energy.gov/biomass/processing_conversion.html* on October 28, 2008.

[22] EERE, DOE, *Thermochemical Conversion,* & *Biochemical Conversion, Biomass Program Thermochemical R&D. http://www1.eere.energy.gov/biomass/thermochemical_conversion.html. http://www1.eere.energy.gov/biomass/biochemical_conversion.html.*

specific plant. Mixed biomass feedstocks may also be used, based on availability of long-term suppliers, seasonal availability, harvest cycle, and costs.

The general steps of the gasification thermochemical process include: Feedstock handling, gasification, gas cleanup and conditioning, fuel synthesis, and separation. Refer to Figure IV.C.2–1 for a schematic of the thermochemical cellulosic ethanol production process through gasification. For greater detail on the thermochemical mixed-alcohols route, refer to NREL technical documentation.[23]

BILLING CODE 6560–50–P

Figure IV.C.2-1

Cellulosic Ethanol Thermochemical Gasification Process

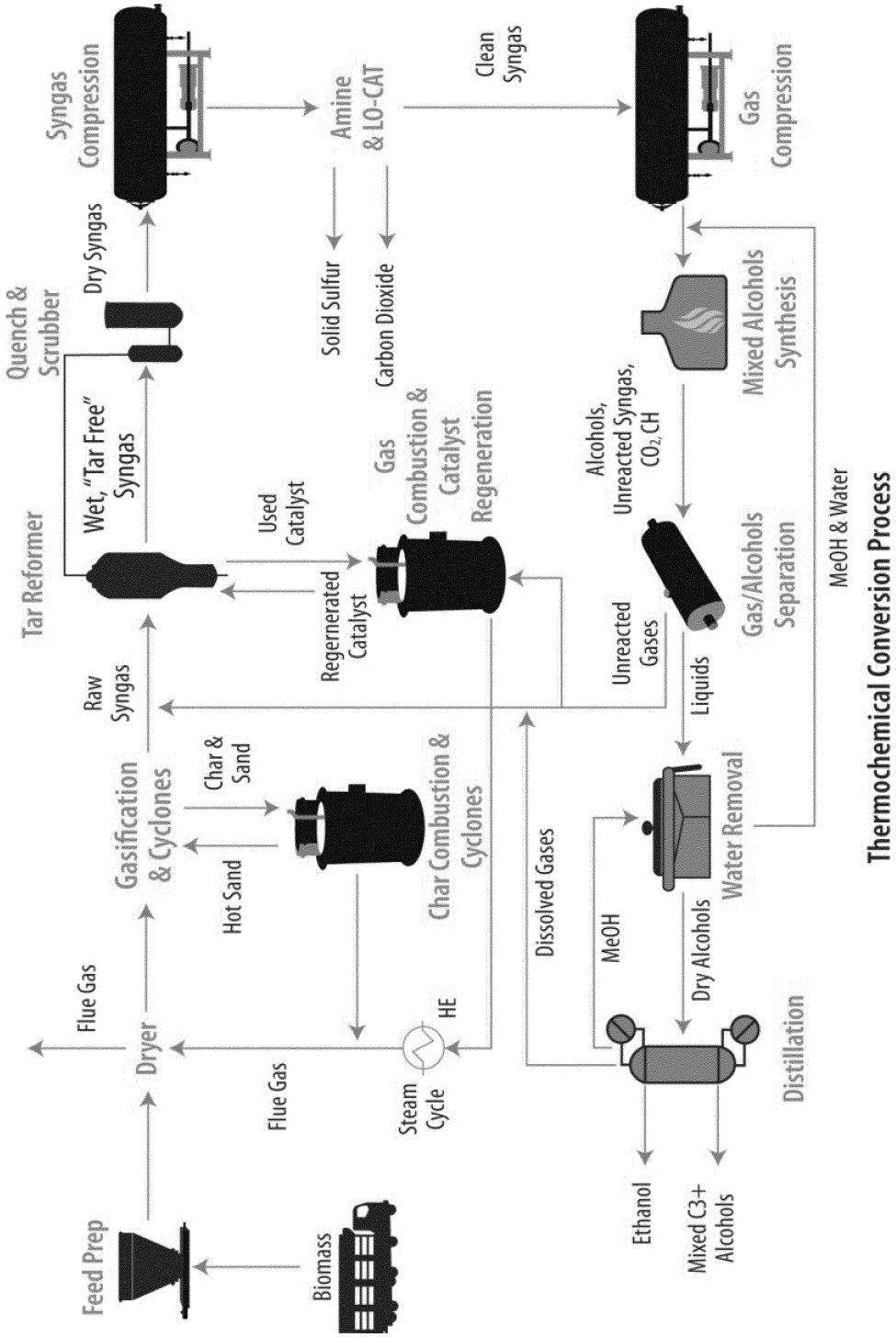

[23] Aden, Andy, Mixed Alcohols from Woody Biomass—2010, 2015, 2022, National Renewable Energy Laboratory (NREL), September 23, 2009.

Figure IV.C.2–2 is a block diagram of a biomass to liquids (BTL) process which produces diesel fuel and naphtha through a thermochemical process.

Figure IV.C.2-2

Biomass to Liquids (BTL) Thermochemical Gasification Process

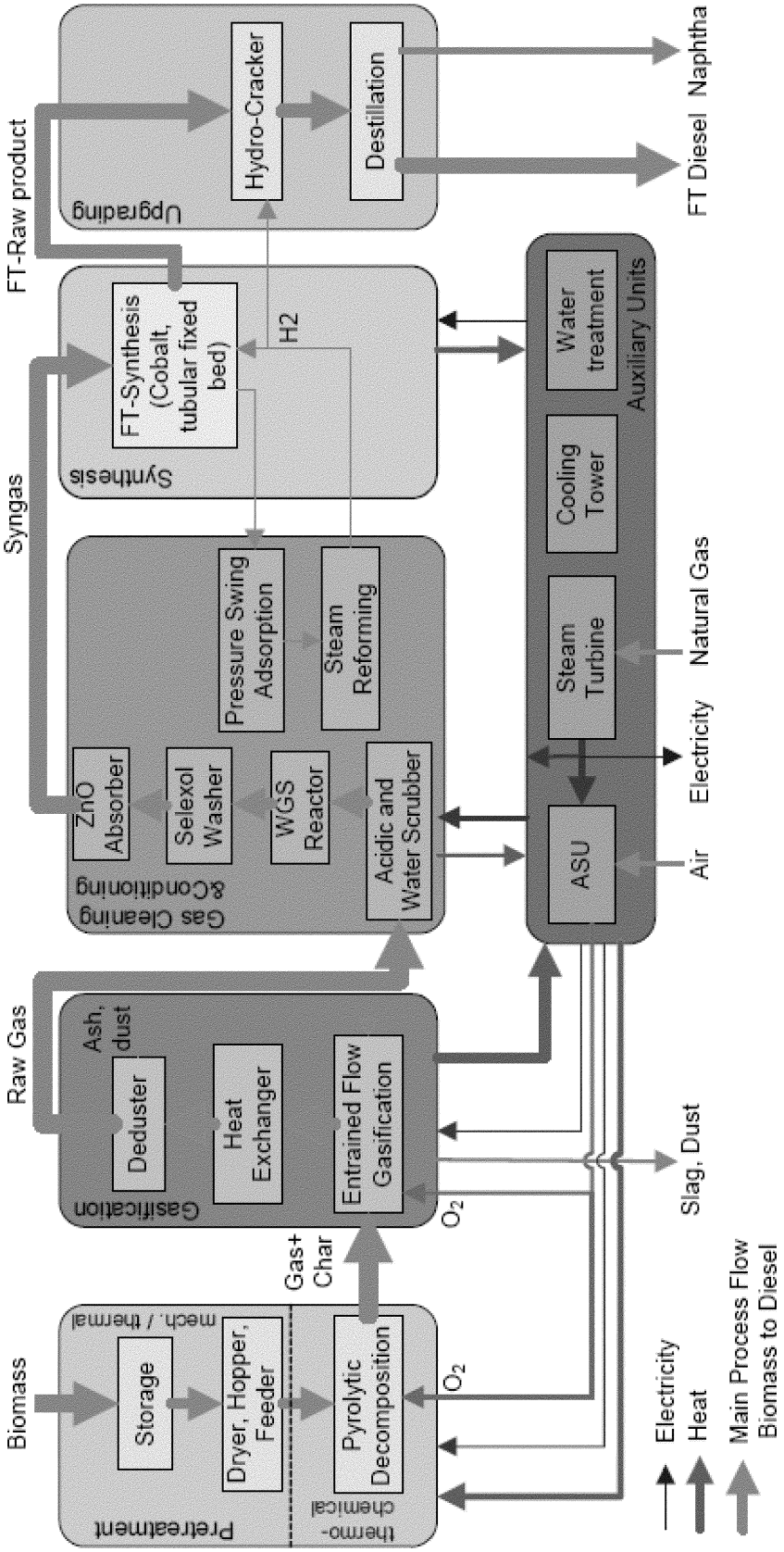

BILLING CODE 6560–50–C

The first step in a thermochemical plant is feedstock size reduction. The particle size requirement for a thermochemical process is around 10-mm to 100-mm in diameter.[24] Once the feed is ground to the proper size, flue gases from the char combustor and tar reformer catalyst regenerator dry the feed from the as-received moisture level of around 30% to 50% moisture to the level required by the gasifier.

The dried, ground feedstock is fed to a gasification reactor for producing syngas. There are two general classes of gasifiers: Partial oxidation (PO_X) and indirect gasifiers. Partial oxidation gasifiers (directly-heated gasifiers) use the exothermic reaction between oxygen and organics to provide the heat necessary to devolatilize biomass and to convert residual carbon-rich chars. Indirect gasifiers use steam to accomplish gasification through heat transfer from a hot solid or through a heat transfer surface. Either the byproduct char and/or a portion of the product gas can be combusted with air (external to the gasifier itself) to provide the energy required for gasification. The raw syngas produced from either type of gasifier has a low to medium energy content which consists mainly of CO, H_2, CO_2, H_2O, N_2, and hydrocarbons.

Once the biomass is gasified and converted to syngas, the syngas must be cleaned and conditioned, as minor components of tars, sulfur, nitrogen oxides, alkali metals, and particulates have the potential to negatively affect the syngas conversion steps. Therefore, unwanted impurities are removed in a gas cleanup step and the gas composition is further modified during gas conditioning. Because this step is a necessary part of the thermochemical process, thermochemical plants are good candidates for processing municipal solid waste (MSW) which may contain a significant amount of toxic material. Gas conditioning steps include sulfur polishing to remove trace levels of H_2S and a water-gas shift reaction to adjust the final H_2/CO ratio for optimized fuel synthesis.

After cleanup and conditioning, the "clean" syngas is comprised of essentially CO and H_2. The syngas is then converted into a liquid fuel by a catalytic process. The fuel producer has the choice of producing diesel fuel or alcohols from syngas by optimizing the type of catalyst used and the H_2/CO ratio. Diesel fuel has historically been the primary focus of such processes by using a Fischer Tropsch reactor, as it produces a high quality distillate product.

A carefully integrated conventional steam cycle produces process heat and electricity (excess electricity is exported). Pre-heaters, steam generators, and super-heaters generate steam that drives turbines on compressors and electrical generators. The heat balance around a thermochemical unit or thermochemical combined unit must be carefully designed and tuned in order to avoid unnecessary heat losses.[25] These facilities greatly increase the thermal efficiency of these plants, but they add to the very high capital costs of these technologies.

a. Ethanol Based on a Thermochemical Platform

Conceptual designs and techno-economic models have been developed for ethanol production via mixed alcohol synthesis using catalytic processes. The proposed mixed alcohol process produces a mixture of ethanol along with higher normal alcohols (e.g., n-propanol, n-butanol, and n-pentanol). The by-product higher normal alcohols have value as commodity chemicals and fuel additives.

The liquid from the low-pressure separator is dehydrated in vapor-phase molecular sieves, producing the dehydrated mixed alcohol feed into a methanol/ethanol overhead stream and a mixed, higher molecular weight alcohol bottom stream. The overhead stream is further separated into a methanol stream and an ethanol stream.

Two companies which are pursuing ethanol based on a thermochemical route are Range Fuels and Enerkem. Range Fuels completed construction of their first commercial facility in Soperton, Georgia in the first quarter of 2010 and began the production of cellulosic biofuel in the third quarter of 2010. In the first phase of operation. Range will use wood chips as a feedstock but they also plan to investigate the possibility of using other non-food biomass. In its initial phase, the Range plant is expected to produce up to 4 million gallons per year of primarily methanol as well as a small quantity of ethanol which they intend to sell into the transportation fuel market. After the company is confident in its operations, Range will begin efforts to expand the plant and add additional reaction capacity to increase production of ethanol and other alcohols.

Enerkem is pursuing cellulosic ethanol production via the thermochemical route. The Canadian-based company was recently announced as a recipient of a $50 million grant from DOE to build a woody biomass-to-ethanol plant in Pontotoc, MS. The U.S. plant is not scheduled to come online until 2012, but Enerkem's 1.3 MGY demonstration plant in Westbury, Quebec is currently operational. According to the company, plant construction in Westbury started in October 2007 and it began producing syngas in late 2009. After the successful testing of the syngas unit, Enerkem added methanol production capabilities and began producing methanol in 2010. The last step for the Westbury plant will be for Enerkem to add a reactor to convert the methanol to ethanol and other higher order alcohols. While it is unclear at this time whether any cellulosic ethanol will be produced in 2011, Enerkem has informed EPA that they do not intend to export any cellulosic fuel to the United States. If Enerkem does export some of its cellulosic biofuel to the U.S., however, it could be used to help to enable refiners meet the 2011 cellulosic biofuel standard.

b. Diesel and Naphtha Production Based on a Thermochemical Platform

The cleaned and water-shifted syngas is sent to the Fischer Tropsch (FT) reactor where the carbon monoxide and hydrogen are reacted over a catalyst. Current FT catalysts include iron-based catalysts and cobalt-based catalysts. The FT reactor creates a syncrude, which is a variety of hydrocarbons that boil over a wide distillation range (a mix of heavy and light hydrocarbons) which are separated into various components based on their vapor pressure. The primary products resulting from this separation are liquid petroleum gas (LPG), naphtha, distillate, and wax fractions. The heavier compounds are hydrocracked to maximize the production of diesel fuel. Conversely, the naphtha material is very low in octane; thus, it would either have to be upgraded, blended down with high octane blendstocks (*i.e.,* ethanol), or upgraded to a higher octane blendstock to have much value for use in gasoline.

Choren is a European company which is pursuing a thermochemical

[24] Lin Wei, Graduate Research Assistant, Lester O. Pordesimo, Assistant Professor Willam D. Batchelor, Professor, Department of Agricultural and Biological Engineering, Mississippi State University, MS 39762, USA, *Ethanol Production from Wood: Comparison of Hydrolysis Fermentation and Gasification Biosynthesis,* Paper Number: 076036, Written for presentation at the 2007 ASABE Annual International Meeting. Minneapolis Convention Center, Minneapolis, MN, 17–20 June 2007.

[25] S. Phillips, A. Aden, J. Jechura, and D. Dayton, National Renewable Energy Laboratory, Golden, Colorado 80401–3393, T. Eggeman, Neoterics International, Inc., *Thermochemical Ethanol via Indirect Gasification and Mixed Alcohol Synthesis of Lignocellulosic Biomass,* Technical Report, NREL/TP–510–41168, April 2007.

technology for producing diesel fuel and naphtha. The principal aspect of Choren's process is their patented three-stage gasification reactor which includes low temperature gasification, high temperature gasification, and endothermic entrained bed gasification. Choren designed its gasification reactor with three stages to more fully convert the feedstock to syngas. Choren will be building a commercial plant in Freiberg/Saxony, Germany that is expected to be operational in 2011 or 2012. Initially, the plant will use biomass from nearby forests, the wood-processing industry, and straw from farmland. Although any fuel produced in 2011 by its Freiberg/Saxony plant and marketed commercially would most likely be used in Europe, it is possible that some of that fuel could be exported to the U.S. Choren is also planning to build a commercial thermochemical/biomass-to-liquids (BTL) plant in the U.S. after their Freiberg/Saxony plant is operational in Germany.

Baard Energy is a U.S. company which plans on utilizing a thermochemical technology for producing diesel fuel and naphtha. Baard, however, plans on primarily combusting coal and cofiring biomass with the coal. Cofiring the biomass with the coal will make their first plant more like the coal-to-liquids plants which are operating today, which may help to convince investors that this technology is already tested. Baard's coal and biomass-to-liquids plant is not expected to be operational until at least 2012.

One challenge for the companies pursing the thermochemical route is the significant capital costs associated with these technologies. The capital costs are very high because there are two significant reactors required for each plant—the gasification reactor and the syngas-to-fuel reactor. Additionally, the syngas must be cleaned to protect the catalysts used in the downstream syngas-to-fuel reactor which requires additional capital costs. However, because of this cleaning step, this technology is a very good candidate for processing MSW which may contain toxic compounds. When considering the cost savings for not having to pay the tipping fees at municipal dumping grounds, MSW feedstocks may avoid almost all the purchase costs for MSW feedstocks which would significantly help offset the high capital costs.

3. Hybrid Thermochemical/Biochemical Processes

Hybrid technologies include process elements involving both the gasification stage of a typical thermochemical process, as well as the fermentation stage of a typical biochemical process and therefore cannot be placed easily into either category. For more specific information regarding either biochemical processes or thermochemical, *please see* Sections IV.C.1 and IV.C.2 respectively. Currently, there are several strategies for the production of ethanol through hybrid processes. These strategies are differentiated by the order in which the thermochemical and biochemical steps take place within the process, as well as how the intermediate products from each step are used.

While we do not expect significant commercial production from hybrid processes in 2011, there are several companies pursing this approach for the future. Examples of the first process strategy, described in Section IV.C.3.a below, include both INEOS Bio and Coskata. As of December 4, 2009 INEOS Bio (along with partner New Planet Energy) has been selected for a $50MM DOE grant for the construction of an 8 MGPY plant in River County, Florida. This plant is projected to finish construction in late 2011. Coskata is currently running a 40,000 gallon per year pilot plant that became operational in 2009 in Madison, Pennsylvania. Coskata is targeting to design and build a 50 MGPY commercial plant that it expects to be operational in 2012. A company currently pursuing the second process strategy, described in Section IV.C.3.b below, is Zeachem Inc. Zeachem is currently constructing a 250 KGPY demonstration plant in Boardman, Oregon. They have received a $25MM DOE grant and expect to have a full commercial production facility operational in 2013.

a. Biochemical Step Following Thermochemical Step

One hybrid strategy involves the gasification of all feedstock material to syngas before being processed into ethanol using a biochemical fermenter. After gasification, the syngas stream is cooled and bubbled into a fermenter containing modified microorganisms, usually bacteria or yeast. This fermenter replaces the typical catalysts found after gasification in a traditional thermochemical process. Unlike traditional fermentation (which break down C5 and C6 sugars), these microorganisms are engineered to convert the carbon monoxide and hydrogen contained in the syngas stream directly into ethanol. After fermentation, the effluent water/ethanol stream from the fermenter is separated similarly to a biochemical process, usually using a combination of distillation and molecular sieves. The separated water can then be recycled back into the fermentation stage of the process. Typical yields of ethanol are predicted to be in the 100–120 gallon per ton range.

Since gasification converts all carbonaceous feedstock material to a uniform syngas before fermentation, there is a higher flexibility of feedstock choices than if these materials were to be fermented directly. In addition, processing incoming feedstock with gasification does not require the addition of enzymes or acid hydrolysis necessary in a biochemical process to aid in the breakdown of cellulosic materials. Fermenting syngas also captures all available carbon contained in the feedstock, including lignin that would not be processed in a typical biochemical fermentation. However, more energy is lost as waste heat as well as secondary carbon dioxide production in the gasification process than would be lost for biochemical feedstock preparation. Using a fermenter in a hybrid process replaces the catalyst needed in a typical thermochemical process. These microorganisms allow for a higher variation of the incoming syngas stream properties, avoid the necessity of a water-shift reaction preceding traditional catalytic conversion, and are able to operate at lower temperatures and pressures than those required for a catalytic conversion to ethanol. Microorganisms, unlike a catalyst, are also self-sustaining and do not require periodic replacement. They are; however, susceptible to bacterial and viral infections which requires periodic cleaning of the fermentation reactors.

b. Concurrent Biochemical and Thermochemical Steps

Another hybrid production strategy involves gasification of the typically unfermentable feedstock fraction (lignin) concurrently with a typical fermentation step for the cellulose and hemicellulose fraction. These steps are subsequently combined in a hydrogenation reaction of the lignin-based syngas with the product of the fermented stream. The feedstock first undergoes acid hydrolysis to break down the cellulose and hemicellulose. Before fermentation, the unfermentable portion of feedstock (lignin, ash and other residue) is fractioned and sent to a gasifier. Concurrently, the hydrolyzed cellulose and hemicellulose is fermented using an acetogen microorganism. These acetogens occur naturally, and therefore do not have to be modified for this process. These acetogens convert both five-carbon and six-carbon sugars from the hydrolized

feedstock to acetic acid. This reaction creates no carbon dioxide, unlike traditional fermentation using yeast, preserving the maximum amount of carbon for the finished fuel. The acetic acid stream then undergoes esterification to create ethyl acetate. Meanwhile, the syngas stream from the gasification of lignin and other residue is separated into its carbon monoxide and hydrogen components. The carbon monoxide stream can be further combusted to provide process heat or energy. The hydrogen stream is combined with the ethyl acetate in a hydrolysis reaction to form ethanol. Acetic acid and ethyl acetate also form the precursors to many other chemical compounds and therefore may be sold in addition to ethanol or further converted to other compounds for sale in the chemicals market. Typical yields for this technology are predicted in the 130–150 gallon per ton range.

4. Pyrolysis and Depolymerization

Pyrolysis and depolymerization are technologies which are capable of creating biofuels from cellulose by either thermally or catalytically breaking them down into molecules which fall within the boiling range of transportation fuels. Pyrolysis technologies are usually thought of as being primarily a thermal technology, however, newer pyrolysis technologies are being developed which are attempting to integrate the use of some catalysts. These are all unique processes, typically with single companies developing the technologies, so they are discussed separately below.

a. Pyrolysis Diesel Fuel and Gasoline

Pyrolysis oils, or bio-oils, are produced by thermally cracking cellulosic biomass at lower temperatures than the gasification process, thus producing a liquid instead of a synthesis gas.[26] The reaction can occur either with or without the use of catalysts, but it occurs without any additional oxygen being present. The resulting oil which is produced must have particulates and ash removed in filtration to create a homogenous "dirty" crude oil type of product. This dirty crude oil must be further upgraded to hydrocarbon fuels via hydrotreating and hydrocracking processing, which reduces its total oxygen content and cracks the heaviest of the hydrocarbon compounds. While one of the finished fuels produced by the pyrolysis process is diesel fuel, a significant amount of gasoline would likely be produced as well. There are two main reaction pathways currently being explored: A two step pyrolysis pathway, and a one step pyrolysis pathway.

The simplest technology used for the two-step pyrolysis approach is called fast pyrolysis. The fast pyrolysis technology uses sand in a fluidized bed to transform bio-fuels into bio-oil. This is purely a thermal process, where the sand's (or other solid's) role is to transfer heat to the biomass. For two reasons, the bio-oils from fast pyrolysis technologies must be upgraded. First, fast pyrolysis oil is unstable, acidic, viscous and may separate itself into two phases so it must be immediately upgraded or it will begin to degrade and repolymerize. The second issue is that pyrolysis bio-oil must be upgraded or it won't meet transportation fuel specifications.

Another approach to fast pyrolysis being pursued by several companies would be to substitute a catalyst in place of sand and the catalyst would be able to stabilize the resulting bio-oil in addition to helping depolymerize the biomass to liquids. Although the resulting bio-oil is stable, it still has to be upgraded into a transportation fuel, since it would still have a high level of oxygenated compounds.

The National Renewable Energy Laboratory (NREL) is working on a "hot filtration" technology that is intended to stabilize bio-oil created using the fast pyrolysis process for a very long period of time (years). This would allow the bio-oil to be stored and transported to an upgrading facility without significant degradation.

It may be possible to use a sophisticated catalyst (instead of sand) in a single step pyrolysis reaction to create pyrolysis oils that exhibit much improved bio-oil properties. The catalysts would not only be able to help depolymerize cellulosic feedstocks, but they produce a bio-oil which could possibly be used directly as transportation fuel. Thus, a second upgrading step may not be necessary. The difficulty encountered by this technology is that catalysts which have been used in the one step process are relatively expensive and they degrade quickly due to the metals which are present in the biomass. Development work on the two-step and one-step pyrolysis processes is ongoing.

Dynamotive Energy Systems Corporation is a Canadian company which uses fast pyrolysis to convert dry waste biomass and energy crops into different products including bio-oil. The bio-oil produced is polar due to its high oxygen content and it contains up to 25% water which is intimately mixed and does not easily separate into another phase with time. Since the bio-oil contains significant amounts of both oxygen and water, it is not directly useable as fuel in conventional vehicles and would have to be converted via another catalytic conversion processing step. The additional catalytic step envisioned by Dynamotive to upgrade the bio-oil into a transportation fuel would combust the material into a synthesis gas which would then be converted into diesel fuel or bio-methanol via a catalytic reaction (the BTL process). The diesel fuel produced is expected to be compatible with existing petroleum diesel fuels.

Dynamotive has two small demonstration plants. One demonstration plant is located in Guelph, Ontario, Canada and its capacity is 66,000 dry tons of biomass a year with an energy output equivalent to 130,000 barrels of oil. The other demonstration plant is located in West Lorne Ontario, Canada. Dynamotive continues to work on a technology for converting its bio-oil to transportation fuels, although they have not announced plans for building such a facility due to funding limits. While Dynamotive is expected to continue to sell its fuel into the chemicals market, it would be possible for Dynamotive to set up an agreement with a refining company which could upgrade its bio-oil to a #2 fuel oil or diesel fuel using existing refinery hardware so that the fuel would qualify under the RFS2 program and contribute to meeting the 2011 cellulosic biofuel standard.

Envergent is a company formed through a joint venture between Honeywell's UOP and the Ensyn Corporation. Although Ensyn has been using fast pyrolysis for more than a decade to produce specialty chemicals, UOP is relying on its decades of experience developing refining technologies to convert the pyrolysis oils into transportation fuels. Envergent is also working with U.S. National laboratories to further their technology. Based on their current technology and depending on the feedstock processed, about 70% of the feedstock is converted into liquid products. The gasoline range products produced are high in octane, while the diesel fuel products are low in cetane. Envergen estimates that if it was able to procure cellulosic feedstocks at $70 per ton, their technology would be competitive with #2 fuel oil produced from crude oil priced at about $40 per barrel. Envergent is licensing this technology as well as working with a U.S. oil company

[26] DOE EERE Biomass Program. "Thermochemical Conversion Processes: Pyrolysis" *http://www1.eere.energy.gov/biomass/thermochemical_processes.html,* November 6, 2008.

to test out this technology in a commercial setting in the U.S.

Petrobras is a Brazilian oil company also working to develop a pyrolysis technology. Because of Petrobas' work in this area (and other areas on biofuels), a Memorandum of Understanding was signed by United States' Secretary of State and Brazil's External Relations Minister on March 9, 2007 to advance the cooperation on biofuels. A second Memorandum of Understanding was signed by PETROBRAS and NREL in September 2008 aimed at collaborating to maximize the benefit of their respective institutional interests in second generation biofuels. Petrobras is also negotiating a Cooperation Agreement with NREL to develop a two step pyrolysis route to produce biofuels from agricultural wastes such as sugar cane bagasse, wood chips or corn stover. Petrobras is optimistic that a catalytic pyrolysis technology can be developed that will produce a stable bio-oil (pyrolysis oil). Petrobras is also hopeful that a one-step pyrolysis technology can be developed to convert biomass directly to transportation fuels, but believes that the two step process may be more economically attractive.

b. Catalytic Depolymerization

There are several companies pursuing catalytic depolymerization including Covanta, Cello Energy and Green Power.

Covanta is currently operating 45 energy-from-waste facilities which annually convert 20 million tons of municipal solid waste materials into 9 million megawatt hours of electricity and 10 billion pounds of steam, which is sold to a variety of industries. Covanta has secured license rights to a catalytic depolymerization technology developed by AlphaKat GmbH. Covanta constructed an AlphaKat demonstration plant in West Wareham, Massachusetts designed to process 45 tons of waste per day into renewable diesel fuel. If successful, the total liquid fuel production capacity of this demonstration plant will be 1 million gallons per year. This plant started up in mid-2010 and after experimenting with the technology to further understand its capabilities, Covanta expects to use the liquid distillate fuel produced from this demonstration plant within its own plant as heating oil and nonroad diesel fuel.

The Cello-Energy process is also a catalytic depolymerization technology. At moderate pressure and temperature, the Cello-Energy process catalytically removes the oxygen and minerals from the hydrocarbons that comprise finely ground cellulose. This results in a mixture of short chain (3, 6 and 9 carbon) hydrocarbon compounds. These short chain hydrocarbon compounds are polymerized to form compounds that boil in the diesel boiling range, though the process can also be adjusted to produce gasoline or jet fuel. The resulting diesel fuel meets the ASTM standards, is in the range of 50 to 55 cetane and typically contains a very low concentration of sulfur.

The Cello process is reported to be on the order of 82% efficient at converting the feedstock energy content into the energy content of the product, which is very high compared to most of today's biochemical and thermochemical processes which are on the order of 50% efficient or less. Because of the simplicity of the process, the capital costs are very low. A 50 million gallon per year plant is claimed to only incur a total cost of $45 million. Because of its high efficiency in converting feedstocks into liquid fuel, the production and operating costs are also estimated to be very low.

In December 2008, Cello completed construction of a 20 million gallon per year commercial demonstration plant. However, they are still working to resolve process issues that have arisen upon scaleup from their pilot plant. However, we are doubtful that Cello will be able to produce any volume of cellulosic biofuel in 2011 as described more fully in Section II.

The Green Power process catalytically depolymerizes cellulosic feedstocks at moderate temperatures into liquid hydrocarbon fuels. The proposed feedstock is municipal solid waste (MSW) or other waste material such as animal waste, plastics, agriculture residue, woody biomass and sewage waste. The feedstock is first ground to a size finer than 5 mm. The feedstock is placed along with a catalyst, some lime which serves as a neutralizing agent, and some fuel which provides a liquid medium, into a reactor and heated to around 350 degrees Celsius. As described by the company, this technology may fit the description for catalyzed pyrolysis reactions described above, but we have categorized this as a separate catalytic depolymerization technology due to its unique features. In the reactor, the feedstock is catalytically converted to liquid fuels which primarily fall within the gasoline and diesel fuel boiling ranges, although these fuels may need further upgrading. The liquid fuels are separated from any solids which are present and are distilled into typical fuel streams including naphtha, diesel fuel, kerosene, and fuel oil. According to publically available information about this technology, the process reportedly produces 120 gallons per ton of feedstock introduced into the process. A light hydrocarbon gas, which is mostly methane, is also produced, but this gas is expected to be burned in a turbine to generate electricity and the waste heat would be used for heating the process. Some carbon dioxide may also be formed and released from the process.

Greenpower completed construction of a demonstration plant located in Fife, Washington in March of 2008. Greenpower is working on obtaining additional funding and an air permit through the State of Washington Environmental Office. While we do not expect that Greenpower will have its plant operational in 2011, it is possible that outstanding issues could be resolved to allow this company to produce renewable fuel that could help refiners comply with the cellulosic biofuel volume standard for 2011.

5. Catalytic Reforming of Sugars to Gasoline

Virent Biorefining is pursuing a process called "Bioforming" which functions similar to the gasoline reforming process used in the refining industry. Hence, this is a significantly different technology than the other cellulosic biofuel technologies discussed above. While refinery-based catalytic reforming technologies raise natural gasoline's octane value and produces aromatic compounds, Bioforming reforms biomass-derived sugars into hydrocarbons for blending into gasoline and diesel fuel. The process operates at moderate temperatures and pressures. In March of 2010, Virent announced that they had begun operating a larger pilot plant capable of producing about 30 gallons per day of high octane naphtha. Commercialization of the Virent process is expected to occur sometime after 2011.

For this technology to become a cellulosic biofuel technology, it will be necessary to link this reforming technology with a technology which breaks cellulose down into starch or sugars. In parallel with its Bioforming work, Virent is working on a technology to break down cellulose into sugars upstream of its technology which reforms sugars to gasoline.

V. Changes to RFS Regulations

EPA proposed two revisions to the general RFS program regulations. First, we proposed to allow the generation of "delayed RINs" for fuel produced between July 1, 2010 and December 31, 2010 using certain fuel pathways that were not in Table 1 to § 80.1426 on July

1, 2010, but which could possibly be added after July 1 if they are determined to meet the applicable GHG reduction thresholds. Under the proposal, delayed RINs could be generated only if the pathways were indeed approved, and only for quantities reflecting fuel produced between July 1, 2010 and the effective date of a new RIN-generating pathway. In a previous action, we finalized the provision for delayed RINs for application only to biodiesel produced from canola oil through transesterification using natural gas or biomass for process energy.[27] In today's action we are modifying the delayed RINs provision to make it more broadly applicable to other renewable fuel production pathways.

The second program modification that we proposed would establish procedures and evaluation criteria for petitions requesting EPA authorization of an aggregate compliance approach to renewable biomass verification for feedstocks grown in foreign countries, akin to that applicable to crops and crop residue grown within the U.S. In today's rule we are finalizing amendments to the RFS regulations to implement this provision.

A. Delayed RIN Generation for New Pathways

For the March 26, 2010 RFS2 final rule (75 FR 14670), we attempted to evaluate and model the lifecycle GHG emissions associated with as many renewable fuel production pathways as possible so that producers and importers of qualifying renewable fuels could generate RFS2 RINs beginning on July 1, 2010. However, we were not able to complete the evaluation of all pathways that we had planned. In the preamble to the final RFS2 rule we announced our intention to complete the evaluation of three specific pathways after release of the RFS2 final rule: grain sorghum ethanol, pulpwood biofuel, and palm oil biodiesel (*see* Section V.C of the RFS2 final rule, 75 FR 14796). To this list we later added biodiesel produced from canola oil as this biofuel was produced under RFS1 and was also expected to participate in the RFS2 program at the program's inception.

In the NPRM associated with today's final action, we proposed a new regulatory provision that could potentially allow RINs to be generated for fuel produced on or after July 1, 2010 representing these four fuel pathways even though they were not in Table 1 to § 80.1426 as of July 1, 2010. Under this proposed provision, RINs could be generated only if the pathways were indeed approved as valid RIN-generating pathways, and only for volumes of fuel produced between July 1, 2010 and the effective date of a new RIN-generating pathway added to Table 1 to § 80.1426. Somewhat different procedures were proposed for the generation of delayed RINs for volumes for which RINs had never been generated, and those for which RINs with a D code of 6 had been generated pursuant to § 80.1426(f)(6) by a grandfathered facility. In a final rule published on September 28, 2010, we finalized regulatory provisions for these "delayed RINs" only for application to biodiesel produced from canola oil through transesterification using natural gas or biomass for process energy, since that action added only this one new pathway to Table 1 to § 80.1426. In that final action we also discussed many of the comments received in response to the proposed provision for delayed RINs, our response to relevant comments, and the resulting modifications we made to the regulatory provisions.

However, we deferred for future consideration one set of comments related to delayed RINs in the September 28, 2010 final rule which established a new RIN-generating pathway for biodiesel produced from canola oil. In response to the NPRM, two commenters requested that the provision for delayed RINs be made applicable to pathways other than the four we proposed, such as pathways utilizing camelina and winter barley. We agree with these commenters that the delayed RINs provision should not necessarily be limited to fuel produced by grain sorghum ethanol, pulpwood biofuel, palm oil biodiesel, or canola oil biodiesel (assuming they are ultimately approved for RIN generation). As the commenters suggested the same rationale that justifies authorization of delayed RINs for these pathways could also justify the authorization of delayed RINs for other pathways that were commercially viable at the start of the RFS2 program, but which EPA was unable to address in time for RINs to be generated at the start of the program. Therefore, today's final rule does not limit the applicability of the delayed RINs provision to any particular pathways, but does include general limitations that will ensure that the provision is limited in scope to address difficulties related to RFS2 program startup. Among other provisions, in today's rule we are specifying that the delayed RINs provision is limited to biofuel pathways in use as of July 1, 2010 for the primary purpose of producing transportation fuel, heating oil, or jet fuel for commercial sale. We believe that this criterion, among others discussed below, will properly define those pathways for which fuel producers should be accorded flexibility in light of EPA's inability to finalize its assessments in time for RFS2 start-up, and for which sufficient information likely existed as of July 1, 2010, for EPA to make lifecycle GHG emissions determinations.

The modified provisions will apply equally to EPA approvals of new pathways directly in response to petitions submitted pursuant to § 80.1416, and to those pathways that EPA approves through rulemaking. This could include the three pathways that were identified in the RFS2 final rule (grain sorghum ethanol, pulpwood biofuel, palm oil biodiesel) if they are determined to meet the GHG thresholds, or any other biofuel produced from a pathway that was in use as of July 1, 2010 for the primary purpose of producing transportation fuel, heating oil, or jet fuel for commercial sale. However, since the delayed RINs provision is intended to address program startup issues, we have included provisions in this final rule to ensure that the availability of the provision will be of limited duration and applicability as described below.

We proposed that delayed RINs would be limited to pathways that are approved by December 31, 2010. Under the proposal, delayed RINs would have only been available for volume produced or imported in 2010. Since we are modifying the delayed RINs provision to make it applicable to other biofuel pathways in addition to the four we proposed, we believe it would be appropriate to allow additional time for producers and importers of biofuels produced as of July 1, 2010 through pathways not included in Table 1 to § 80.1426 to both satisfy the eligibility requirements of the delayed RINs provision, and to utilize it. Accordingly, today's rule makes delayed RINs available for volumes produced or imported by eligible parties in either 2010 or 2011. If we approve pathways for sorghum ethanol, pulpwood biofuel, or palm oil biodiesel in time for delayed 2010 and/or 2011 RINs to be used for RFS2 compliance, we will specifically add those pathways to the delayed RINs provisions at § 80.1426(g) in our final actions adding those fuel pathways to Table 1 to § 80.1426. Fuels produced in 2010 or 2010 through other pathways that EPA adds to Table 1 to § 80.1426 or approves pursuant to § 80.1416 will be eligible for delayed RINs if:

[27] 75 FR 59622, September 28, 2010.

(1) EPA finds that the pathway was in use as of July 1, 2010 for the primary purpose of producing transportation fuel, heating oil, or jet fuel for commercial sale, and

(2) A complete petition seeking approval of the pathway is submitted to EPA pursuant to § 80.1416 by January 31, 2011.

These requirements are intended to limit the availability of delayed RINs to RIN-generating pathways that could have participated in the RFS2 program at its inception, and for which producers and importers have taken reasonable and timely measures to seek EPA approval action. We believe, for example, that parties should not be accorded the flexibility to issue delayed RINs if they have not actively pursued EPA approval of their pathways in timely manner pursuant to the petition process in § 80.1416, and has therefore limited the delayed RINs provision to those pathways for which complete petitions are submitted to EPA by January 31, 2011.

The NPRM approach envisioned that all RINs with a D code of 6 that are retired, and all delayed RINs that are generated, must be designated as 2010 RINs. However, since we are allowing delayed RINs to be generated for volumes produced in both 2010 and 2011, we believe that this requirement would no longer be appropriate. Therefore, we have modified the delayed RINs provision so that the generation year associated with delayed RINs must correspond to the year in which the corresponding volume was produced. Delayed RINs generated to represent volume produced in 2010 must be designated as 2010 RINs and delayed RINs generated to represent volume produced in 2011 must be designated as 2011 RINs. Delayed RINs that are generated as 2010 RINs will be valid for use in complying with the standards for calendar years 2010 or 2011, according to § 80.1427(a)(6) and under the rollover restrictions provided at § 80.1427(a)(5). Likewise, delayed RINs that are generated as 2011 RINs will be valid for use in complying with the standards for calendar years 2011 or 2012. Since delayed RINs can only be generated for volumes produced or imported in 2010 or 2011, and a RIN is only valid for compliance for two compliance years, all delayed RINs will be invalid for compliance with the requirements of calendar year 2013 and later.

EPA recognizes that the delayed RINs provision may not provide all biofuel producers the opportunity to generate RINs for all of their biofuel produced on and after July 1, 2010 if, for instance, a new RIN-generating pathway is not approved until after December 31, 2011. EPA has structured the delayed RINs provision in an attempt to reduce the impact of EPA's delay on such parties, while maintaining as closely as possible the relationship of RINs to actual fuel production. Limiting the delayed RINs provision to qualifying fuel produced in 2010 and 2011 appropriately ties the provision to program start-up, and is consistent with the 2-year valid life of RINs. Nevertheless, EPA expects that it will be able to complete its lifecycle assessments of pathways for which petitions are submitted by January 31, 2010 in time for producers using such pathways to avail themselves of the delayed RINs provision as structured in today's final rule.

Today's delayed RIN provision also provides that all requirements that apply under the RFS2 rules with respect to identifying fuels for which RINs may be generated, the generation and use of RINs, and recordkeeping and reporting, also apply in the context of delayed RINs unless specifically provided otherwise in § 80.1426(g). For example, the existing recordkeeping provisions will require parties to maintain documents related to the production and transfer of the volumes of renewable fuel for which they are generating delayed RINs. The required records are necessary to document that the volumes of fuel for which delayed RINs are generated qualify as renewable fuel under the RFS2 program, e.g., that the fuel was produced using feedstocks that meet the definition of renewable biomass, and using feedstocks, process energy, and processes that conform to the applicable pathway in Table 1 to § 80.1426 or approved pursuant to § 80.1416. Furthermore, the requirements concerning the transfer of renewable fuel for which parties are generating delayed RINs is necessary to ensure that the fuel was, in fact, transferred by the delayed RIN-generating party.

B. Aggregate Compliance Approach for Renewable Biomass From Foreign Countries

As part of the NPRM, we proposed new regulatory provisions to establish procedures for submitting petitions to request EPA authorization of an aggregate compliance approach to renewable biomass verification for feedstocks grown in foreign countries,[28] akin to that applicable to planted crops and crop residue from existing agricultural land within the U.S. In the NPRM, we referenced the preamble discussion in the final RFS2 regulations in which we indicated that, while we did not have sufficient data at the time to make a finding that the aggregate compliance approach adopted for domestically-grown crops and crop residues would be appropriate for foreign-grown feedstocks, we would consider applying the aggregate compliance approach for renewable biomass on a country by country basis if adequate land use data becomes available.

In the NPRM, EPA proposed a process by which entities might petition EPA for approval of the aggregate compliance approach for renewable fuel feedstocks either in a foreign country as a whole or in a specified geographical area within a country. The proposed regulations would have allowed petitioners to request authorization of the aggregate compliance approach for specific feedstocks or for all planted crops and crop residue, and EPA sought comment on these options. The proposed regulations also included a general criterion and a number of considerations that EPA would use in evaluating petitions, and specified a list of elements that would be required in a petition. The preamble to the proposed rule included a description of the process by which EPA proposed to make decisions concerning any petitions received.

EPA received a number of comments on the proposal and is finalizing an approach similar to that which was proposed, with some significant modifications, as described below.

1. Criteria and Considerations

In developing the proposed regulations, EPA relied substantially on the approach we used to determine that an aggregate compliance approach was appropriate for planted crops and crop residue from U.S. agricultural land. EPA is finalizing an approach similar to that which was proposed and that which was applied to planted crops and crop residue from U.S. agricultural land. Petition approval for application of the aggregate compliance approach will be based on a finding by EPA that such an approach can provide reasonable assurance that planted crops and crop residue from a given foreign country meet the definition of renewable biomass and will continue to meet the definition of renewable biomass, as demonstrated through the submission of credible, reliable and verifiable data. Based on our experience in making a comparable finding for U.S.-grown crops and crop residues, we are finalizing a number of more specific

[28] 75 FR 42238, 42262, July 20, 2010.

factors that EPA will consider when determining whether this finding should be made, as described below.

- Whether there has been a reasonable identification of the "2007 baseline area of land," defined as the total amount of cropland, pastureland, and land that is equivalent to U.S. Conservation Reserve Program land in the country in question that was actively managed or fallow and nonforested on December 19, 2007, taking into account the definitions of terms such as "cropland," "pastureland," "planted crop," and "crop residue" included in the final RFS2 regulations.
- Whether information on the total amount of cropland, pastureland, and land that is equivalent to U.S. Conservation Reserve Program land in the country in question for years preceding and following calendar year 2007 shows that the 2007 baseline area of land is not likely to be exceeded in the future.
- Whether economic considerations, legal constraints, historical land use and agricultural practices and other factors show that it is likely that producers of planted crops and crop residue will continue to use agricultural land within the 2007 baseline area of land identified into the future, as opposed to clearing and cultivating land not included in the 2007 baseline area of land.
- Whether there is a reliable method to evaluate on an annual basis whether the 2007 baseline area of land is being or has been exceeded.
- Whether a credible and reliable entity has been identified to conduct data gathering and analysis, including annual identification of the aggregate amount of cropland, pastureland, and land that is equivalent to U.S. Conservation Reserve Program land, that is needed for an annual EPA evaluation of the aggregate compliance approach, and whether the data, analyses, and methodologies are publicly available.
- Whether the ministry (or ministries) or department(s) of the national government with primary expertise in agricultural land use patterns, practices, data, and statistics of the country in question supports the petition and have verified in writing the accuracy and veracity of the information submitted in the petition and agreed to review and verify the data submitted on an annual basis to facilitate EPA's annual assessment of the 2007 baseline area of land.

EPA requested comments on the proposed general criteria and specific considerations for approving the aggregate compliance approach for non-domestically grown feedstocks. EPA received a number of comments in support of the proposed general criteria, stating that EPA has outlined a straightforward, science-based approach that is necessary to avoid unfairly disadvantaging foreign renewable fuel producers and to ensure availability of adequate supplies of renewable fuel. Commenters noted that the establishment of a petition process for applying the aggregate compliance approach to foreign grown feedstocks levels the playing field for foreign renewable fuel producers and ensures that the U.S. government is not posing a barrier to trade contrary to its WTO obligations. EPA also received comments in opposition of the proposed petition process that stated that the U.S. aggregate compliance approach is not sound, and that the data that would be relied on to establish the aggregate compliance approach for foreign feedstocks would be even less reliable than that used by EPA to support its finding for the domestic aggregate compliance approach. EPA also received comments arguing that the use of foreign feedstocks and importation of foreign renewable fuels should be disallowed under the RFS2 program.

EPA believes that the aggregate compliance approach for renewable biomass is an appropriate tool that, in the right circumstances, can fully ensure that the EISA renewable biomass requirements are satisfied while easing the burden on renewable fuel producers and their feedstock suppliers. The logic for the approach is described in the preamble to the RFS2 rule. EPA believes that in applying the criteria adopted today for assessing petitions for application of the aggregate approach to foreign countries, and considering the factors specified in the rule, that EPA will be able to properly identify situations where the aggregate compliance approach can be appropriately applied in foreign countries. The public will have an opportunity to review petitions, and to apprise EPA of any concerns regarding the data relied upon, or the logic and rationale for application of the aggregate compliance approach to a particular country.

EPA also believes that establishing the aggregate compliance approach petition process for planted crops and crop residue from foreign countries is appropriate and fair since the renewable biomass verification process is currently streamlined for producers using U.S. planted crops and crop residue, and EPA believes that it should clarify the process and substantive considerations needed to extend this streamlined compliance approach to foreign planted crops and crop residue. The aggregate compliance approach petition process for planted crops and crop residue from foreign countries is intended to provide foreign renewable fuel producers with a similar level of streamlining for qualification of renewable biomass as provided to domestic producers.

EPA disagrees with the commenter that argues that the use of foreign feedstocks and importation of foreign fuels should be disallowed, as nothing in the Clean Air Act (CAA) prevents foreign products from being used towards meeting the RFS2 requirements.

2. Applicability of the Aggregate Approach

The aggregate compliance approach for domestic agricultural feedstocks applies to all planted crops and crop residue that could be used in renewable fuel production from existing agricultural land in the U.S. EPA solicited comment on whether the rules establishing the aggregate compliance approach petition process for foreign feedstocks should allow petitions and EPA approval for a single, or limited number, of feedstocks, or for a limited geographic area within a country, or whether we should only allow petitions and EPA approval at the national level and for all planted crops and crop residue.

The proposed rule spoke generally of "feedstocks," and we received one comment in support of our proposed approach to allow petitions to be submitted for specific feedstocks. In particular, the commenter argued that the reduced regulatory burden on U.S.-grown corn should be extended to Brazilian-grown sugarcane. We believe that the rationale underlying the comment is not fully accurate, as the aggregate compliance approach in the U.S. applies to all planted crops and crop residue, not just corn. Upon further consideration, EPA believes that it is highly unlikely that data and analysis could support application of the aggregate approach to feedstocks other than crops and crop residue. Furthermore, we believe that the same data and analysis would be needed to justify application of the aggregate compliance approach to individual crops as would be needed to justify its application to all planted crops and crop residue within a given geographic area. Thus, it would be most efficient, and most consistent with the current approach in the U.S., to authorize the aggregate compliance approach for all planted crops and crop residue within a geographic area at one time, rather than on a crop-by-crop basis. This approach will simplify the regulations, as it permits EPA to specify the data,

analyses and considerations related specifically to supporting the aggregate compliance approach for those types of feedstock. We have therefore modified the final rule to specify that petitions and EPA approval will apply to all planted crops and crop residue from existing agricultural land in a foreign country.

Several commenters supported the application of the aggregate compliance approach petition process on a national basis, but not for a geographical subset of a foreign country. These commenters argued that applying the process on a national basis is fair because it is consistent with the U.S. aggregate approach, which was applied on a national level. Furthermore, the commenters argue that geographical subsets should not be allowed because doing so would promote "cherry picking" of data by private parties to show that a certain region is not experiencing conversion of forest and ecologically sensitive lands, even when on a national level, those lands are decreasing. Commenters also argue that local governments do not have the enforcement capability and land management policies that national governments have.

In contrast, one commenter believed that parties should be able to petition for the aggregate compliance approach to apply to specific geographical regions within a foreign country, citing data from Brazil implying that almost all sugarcane is harvested from a certain region and therefore the aggregate compliance approach could successfully be applied to that region only.

EPA agrees with those commenters that believe that the aggregate compliance approach petition process should be allowed only at the national level. Applying the petition process on the national level is consistent with the U.S. approach and will therefore harmonize application of the approach where it has been approved. Moreover, EPA believes that national-scale land use data is typically the most reliable and transparent, and can more easily be confirmed by the national government. Furthermore, national level data most accurately reflects the broader effects of renewable fuel feedstock production on land use patterns.

3. Data Sources

To make the aggregate compliance determination for U.S. agricultural lands, EPA obtained USDA data from three independently gathered national land use data sources (the Farm Service Agency (FSA) Crop History Data, the USDA Census of Agriculture (2007), and the satellite-based USDA Crop Data Layer (CDL)). *Please see* Section II.C.4.c.iii of the preamble to the final RFS2 rule (75 FR 14701 (March 26, 2010)) for a more detailed description of the data sources used. Using these data sources, EPA was able to assess the area of land (acreage) available in 2007 in the United States for production of crops and crop residues that meet the CAA definition of renewable biomass. In the case of a petition to apply the aggregate compliance approach in a foreign country, when considering the information and data submitted by the petitioner, EPA proposed and is finalizing a requirement that data supporting the petition be credible, reliable and verifiable. EPA will evaluate such information on a case-by-case basis, but expects that data supporting petitions will be at least as credible, reliable, and verifiable as the USDA data used to make the determination for U.S. agricultural land.

EPA noted in the preamble to the proposed rule that when evaluating whether the data relied on are credible, reliable, and verifiable, EPA would take into account whether the data is submitted by, generated by, or approved by the national government of the foreign country in question, as well as how comprehensive and accurate the data source is. In the proposal, EPA noted that it is important for the national government of the country seeking consideration to be involved in the petitioning and data submittal process, and sought comment on whether participation by a foreign government should be specifically required. Commenters generally supported requiring the national government's involvement in providing and/or verifying the data used in both the initial petition and in the annual reassessments, but most did not believe that the national government itself needed to be the petitioner. EPA agrees that, in order to ensure a robust and credible data set and analysis, the national government of the country from which the petition is submitted should be involved in the petition process and the annual validation, but need not be the party actually submitting the petition. Thus, in today's final rule, EPA is requiring that the appropriate ministry or department within the national government submit a letter confirming that they have reviewed and verified the petition and the data supporting it, and that the data support a finding that planted crops and crop residue from the country meet the definition of renewable biomass and will continue to do so. Furthermore, EPA is requiring that the responsible national government ministry or department will review and verify the data submitted on an annual basis to facilitate EPA's annual evaluation of the 2007 baseline area of land in that country.

Additionally, EPA indicated in the preamble to the proposed rule that it intended to take into consideration whether the data is publically available, whether the data collection and analysis methodologies and information on the primary data source are available to EPA, and whether the data has been generated, analyzed, and/or approved or endorsed by an independent third party. Commenters generally agreed that data used to support a petition must be publicly available and transparent. EPA agrees that this is highly preferable, so EPA will consider this factor in determining whether to grant a petition. Several commenters suggested that complete transparency requires the data itself as well as the data analysis conducted and methodology used by the petitioner to be made available to the public. EPA agrees that information that is not privileged should be made publicly available, and will publish petitioners' data sources, statistical methodologies and analyses in the public rulemaking docket as part of the public notice and comment process to the extent permissible by law (*see* below for a more detailed description of the public participation process).

EPA also proposed to take into account the quality of the data that is available on an annual basis for EPA's annual assessments of any approved aggregate compliance approach, as well as whether the petitioner has identified an entity who will provide to EPA an analysis of the data updates each year following EPA's approval of the aggregate compliance approach for that country. EPA believes that the data and analyses used for the annual assessments of any approved aggregate compliance approach must be just as robust and transparent as the data used to establish the original baseline amount of agricultural land. Some commenters argue that the national government should be required to play a role in the ongoing land use tracking. As described above, EPA believes it is important to have the involvement of the national government in reviewing the data and analyses for the annual assessments. Other commenters argue that the annual verification should be conducted wholly by an independent third party to ensure accuracy and objectively. EPA has addressed these comments in Section V.B.4. below.

Furthermore, EPA proposed to consider agricultural land use trends

from several years preceding 2007, as well as the years following 2007 to the time the petition is submitted in order to evaluate whether or not it is likely that a 2007 baseline would be exceeded in the future. We also proposed that petitioners submit historical land use data for the land in question, such as satellite data, aerial photography, census data, agricultural surveys or agricultural economic modeling data. EPA did not receive specific comments on the consideration of agricultural land use trends or on the requirement to submit data on historical land use trends. EPA believes that this information would be useful in assessing whether the 2007 baseline area of land would likely be exceeded in the future. Thus, as explained further in Section V.B.4 below, EPA is finalizing that, when evaluating petitions, we will take into consideration historical agricultural land use trends in the country in question, and we are requiring that petitioners submit historical land use data for the land in question.

Finally, EPA proposed to consider whether there are laws in place in the country for which the petition was submitted that might prohibit or incentivize the clearing of new agricultural lands, and proposed to consider the efficacy of these laws. EPA also proposed to assess whether any market factors are expected to drive an increase in the demand for agricultural land in the country for which the petition was submitted. Commenters generally supported EPA's consideration of these factors when evaluating petitions, and thus EPA will take them into account when assessing petitions. For further discussion of this issue, *see* Section V.B.4 which follows.

4. Petition Submission

EPA proposed a requirement that all submittals, including the petition, supporting documentation, and annual data and analyses, be submitted in English. One commenter argued that the components of the petition should be submitted both in English and in the original language. We agree that it would be useful and reasonable for EPA to receive and make available to the public the petition and all supporting documents in English and their original language (if not English) in order to verify translation, particularly of technical texts and data. Therefore we are finalizing a requirement that all petitions and supporting documentation should be submitted in English and their original language.

EPA also proposed that petitioners submit specified information as part of their formal petition submission package, or explain why such information is not necessary for EPA to consider their petition. EPA is finalizing the list of information that will be required, absent an explanation by the petitioner as to why any of the information is not necessary, with modifications to reflect that petitions will be considered only for all planted crops and crop residue from foreign countries in their entirety.

First, petitioners will need to submit an assessment of the total amount of land that is cropland, pastureland, or land equivalent to USDA's Conservation Reserve Program land that was cleared or cultivated prior to December 19, 2007, and that was actively managed or fallow and nonforested on that date. For example, in assessing the amount of total existing agricultural land in the U.S. on the enactment date of EISA, EPA used FSA Crop History data to show that there were 402 million acres of agricultural land existing in the U.S. in 2007.

As part of the assessment, the petitioner will be required to submit to EPA land use data that demonstrates that the proposed 2007 baseline area of land is agricultural land that was cleared or cultivated prior to December 19, 2007 and that was actively managed or fallow and nonforested on that date. The data may include satellite imagery or data, aerial photography, census data, agricultural surveys, and/or agricultural economic modeling data. As mentioned above, the FSA crop history data used for the U.S. aggregate compliance approach determination consists of annual records of farm-level land use data that includes all cropland and pastureland in the U.S. EPA also considered USDA Census of Agriculture data, which consists of a full census of the U.S. agricultural sector once every five years, as well as the USDA National Agricultural Statistics Service (NASS) Crop Data Layer (CDL), which is based on satellite data.

In establishing the total amount of existing agricultural land for the U.S. aggregate compliance approach determination, EPA relied on the RFS2 definitions of the relevant terms, including planted crops, crop residue, and agricultural land, which is defined as consisting of cropland, pastureland and Conservation Reserve Program (CRP) [29] land. In the proposal, EPA recognized that the CRP is only applicable to U.S. agricultural land, and thus solicited comment on whether the final rules should allow EPA to consider land that is equivalent or similar to US CRP land as existing agricultural land for purposes of RFS2-compliant feedstock cultivation in a foreign country, and whether EPA should be able to make such a determination in the context of a petition for application of the aggregate approach to a foreign country. Commenters noted that EPA should consider foreign land categories similar to CRP. EPA agrees, and has modified the final regulation to include specific references to "land that is equivalent to U.S. Conservation Reserve Program" land. One commenter also suggested that EPA consider lands falling outside of the definition of "existing agricultural land," including degraded land and land not under primary forest. However, EPA disagrees that the types of land considered should extend beyond those that are equivalent to the land types identified in the final RFS2 definition of "existing agricultural land." If the land in question does not meet the RFS2 definitions of "cropland" or "pastureland" in 40 CFR 80.1401, or it is not equivalent to CRP land, then it is not "existing agricultural land" from which crops or crop residue that meet the definition of "renewable biomass" can be obtained. Therefore, they will not be counted towards the total amount of existing agricultural land in a petition for application of the aggregate approach to a foreign country.

Second, EPA proposed that the petitioner would also be required to provide to EPA historical land use data, covering the years from prior to 2007 to the current year. For the U.S. aggregate compliance approach determination, EPA analyzed the FSA Crop History data from the years 2005 through 2007 and the USDA Census of Agriculture from 1997 through 2007, finding that there was an overall trend of contraction of agricultural land utilization in the U.S. Commenters generally supported this requirement. EPA believes that this will be useful information in considering the likelihood that the 2007 baseline area of land is likely to be exceeded in the future, and is finalizing a requirement that petitioners submit historical land use data as part of their petition.

Third, EPA proposed that the petitioner would need to provide a description of any applicable laws, agricultural practices, economic considerations, or other relevant factors that had or may have an effect on agricultural land use within the foreign country. For the U.S. aggregate

[29] The CRP program is administered by U.S. Department of Agriculture's Farm Service Agency and provides technical and financial assistance to eligible farmers and ranchers to address soil, water, and related natural resource concerns on their lands in an environmentally beneficial and cost-effective manner.

compliance approach determination, EPA took into account the CAA renewable fuel obligations, the unsuitability and high cost of developing previously undeveloped land for agricultural purposes, as well as projected increases in crop yields on existing agricultural land. Commenters supported the relevance of this type of information to EPA's action on a petition for application of the aggregate approach to a foreign country. Furthermore, another commenter recommended that EPA consider the efficacy and enforcement of any applicable laws that may have an effect on the use of the land in question. EPA agrees, and has modified this element in the final rule to require the submission of information regarding the efficacy and enforcement of relevant laws.

One commenter suggested that EPA take into consideration the limitations on feedstock growth posed by local climate and soil quality. EPA understands that in some circumstances poor soil quality could be a factor that influences land use practices and, in particular, whether existing croplands continue to be used for crop production as opposed to former forestland. One of the factors identified for EPA consideration in today's rule is whether historical land use and agricultural practices and/or other factors show that it is likely that producers will continue to use agricultural land within the 2007 baseline area of land. In addition, one of the required submission elements is "agricultural practices, economic considerations or other relevant factors that had or may have an effect on the use of agricultural land." Thus, EPA believes that the considerations raised by the commenter can and will be considered by EPA in evaluating petition submittals. EPA urges the commenter to participate in the public notice and comment process that all petitions submitted to EPA will be subject to (*see* discussion of this subject in Section V.B.5), and to provide any information on these issues that the commenter believes may be appropriate for EPA evaluation at that time.

Among the "other relevant factors" that a petitioner must consider, there are a variety of environmental conditions or circumstances that may be relevant. For instance:

- Local variability in weather
- Availability and quality of fresh water as supplied by snow pack, rain, runoff and inundations
- Frost and icing
- Severe winds and fires
- Hail and sleet
- Extended periods of rain or drought
- Other extreme events

Predictions on the seasonal to interannual (El Nino/La Nina) are available to improve the information included in the petition. Weather and water predictions may also be important for shorter term supply management and volume production analyses.

Finally, EPA proposed and is finalizing that the petitioner be required to provide a plan describing an entity who will, on a continuing yearly basis, conduct any data gathering and analysis necessary to assist EPA in its annual assessment of any approved aggregate approach. Additionally, EPA proposed that the plan would describe the data, the data source, and the schedule on which the data would be updated and made available to EPA and the public. One commenter argued that the annual verification should be conducted or reviewed by an independent third party financed by the petitioner through an escrow account. EPA believes that review of the initial and annual data by a qualified independent third party would add credibility and reliability to the process, but does not believe it should be required. EPA believes that providing notice through the **Federal Register** and opportunity for public comment on each petition submitted afford the public ample time to analyze and comment on the data submitted by the petitioner. Furthermore, EPA is adding a requirement, described above, for participation in the process by the national government of the country for which a petition is submitted, and EPA will thoroughly scrutinize the information submitted in the petition prior to making any assessment. Therefore, EPA is not finalizing a requirement that the petition and the annual updates be analyzed by an independent third party, but EPA is reiterating that participation by an independent third party would add credibility to a petition and to annual evaluations.

5. Petition Process

EPA proposed to provide an opportunity for public comment on petitions for approval of an aggregate compliance approach for a foreign country. EPA proposed to publish a **Federal Register** notice informing the public of incoming petitions, with information on how to view the petitions and any supporting information. Additionally, EPA proposed to then accept public comment on the petition. Once the public comment period closes, EPA proposed to make an assessment, taking into account the information submitted in the petition as well as the comments received, and then publish a decision in the **Federal Register** to either approve or deny the petitioner's request.

EPA proposed that, if the petition has been approved, the **Federal Register** notice will specify an effective date at which time producers using the specified feedstocks from the specified areas identified in EPA's approval will be subject to the aggregate compliance approach requirements in 40 CFR 80.1454(g) in lieu of the otherwise applicable individualized renewable biomass recordkeeping and reporting requirements. For the final rule, EPA has made a minor modification to the regulatory language in 40 CFR 80.1454(g) to clarify the recordkeeping requirements from which renewable fuel producers are exempted if their feedstocks are subject to the aggregate compliance approach. Producers using feedstocks subject to the aggregate compliance approach are exempted from the renewable biomass recordkeeping requirements in 40 CFR 80.1454(g)(2), but remain subject to the recordkeeping requirements related to feedstocks in 40 CFR 80.1454(b).

EPA sought and received comments on this proposed petition process. Most commenters agree that each petition submitted should be subject to public notice and comment procedures. Several commenters argued that although there should be a public notice and comment period, it should not cause undue delays in reviewing and publishing a decision on the petitions. One commenter requested that 60 days be provided for public review of the incoming petitions. Another commenter also requested that EPA specify a timeline for the public comment process and the types of issues that will be addressed during the process.

EPA agrees that public notice and comment is necessary and important, and is maintaining that process in today's final rule. Furthermore, EPA intends that decisions on petitions will be made within an amount of time that is reasonable, yet sufficient to conduct a thorough analysis of the incoming data. EPA concurs that 60 days is a reasonably practical amount of time for public review and analysis of the petition and associated data, so today's rule provides for a 60 day comment period on each petition submitted.

EPA does not agree with the comment that the public comments should be restricted to certain issues. EPA will evaluate all comments received to determine if they are relevant to its determination. The petitions and the supporting data will be included in the rulemaking docket in their entirety

(excepting only material that is claimed to be confidential business information or which is otherwise privileged), and the public may comment on any aspect of the petitions or the supporting information.

A commenter argued that the public notice and comment procedure should be included in the regulatory language, and that any and all data and calculations in the petitions should be available to the public. EPA generally agrees, and has included provisions concerning public notice and comment in the final regulatory language. Furthermore, EPA will make available in the docket all information submitted in support of each petition unless the material is claimed to be confidential business information or is otherwise legally prohibited from disclosure.

Additionally, EPA proposed three circumstances that could lead EPA to withdraw its approval of the aggregate compliance approach for a foreign country. We received one comment that argued that EPA must withdraw its approval under the three circumstances identified in the proposed regulations at § 80.1457(e)(1)(i)-(iii). Although we generally agree that the three circumstances identified will likely lead EPA to withdraw its approval, we believe it is best to allow EPA the discretion to evaluate these circumstances on a case-by-case basis. Therefore, we have retained in the final rule the provision stating that EPA "may" withdraw its approval in the circumstances identified, in which case producers using planted crops or crop residue from the country in question would be subject to the individual recordkeeping and reporting requirements under §§ 80.1454(g) and 80.1451(d) beginning July 1 of the following year.

Finally, EPA requested comment on whether the burden associated with the proposed petition process is reasonable, and how it might be minimized while still remaining adequately robust. One commenter noted that the burden of the petition process is reasonable as proposed, and could be made more stringent while remaining reasonable. EPA believes the level of burden associated with the proposed petition process was reasonable and appropriate and believes that the requirements set forth in today's final rule do not significantly alter the proposed level of burden.

VI. Annual Administrative Announcements

In the RFS2 final rule, we stated our intent to make two announcements each year:

- Set the price for cellulosic biofuel waiver credits that will be made available to obligated parties in the event that we reduce the volume of cellulosic biofuel below the applicable volume specified in the Clean Air Act (CAA), and
- Announce the results of our annual assessment of the aggregate compliance approach for U.S. planted crops and crop residue.

The biofuel waiver credit price being announced today was calculated in accordance with the specifications in § 80.1456(d). Since the manner in which EPA calculates the waiver credit price is precisely set forth in EPA regulations (which were issued through a notice-and-comment process), and since some of the variables necessary to compute the price have only recently become available, EPA did not propose a waiver credit price for comment. Similarly, because EPA's assessment of the aggregate compliance approach announced today was conducted using data sources, methodology, and criteria that were identified and explained in the preamble to the RFS2 final rule, it was not necessary to present a preliminary annual assessment for comment in the NPRM.

A. 2011 Price for Cellulosic Biofuel Waiver Credits

Section 211(o)(7)(D) of the CAA requires that whenever EPA sets the applicable volume of cellulosic biofuel at a level lower than that specified in the Act, EPA is to provide a number of cellulosic credits for sale that is no more than the EPA-determined applicable volume. Congress also specified the formula for calculating the price for such waiver credits: Adjusted for inflation, the credits must be offered at the price of the higher of 25 cents per gallon or the amount by which $3.00 per gallon exceeds the average wholesale price of a gallon of gasoline in the United States.[30] The inflation adjustment is for years after 2008. EPA regulations provide that the inflation adjustment is calculated by comparing the most recent Consumer Price Index for Al Urban Consumers (CPI–U) for the "All Items" expenditure category as provided by the Bureau of Labor Statistics that is available at the time EPA sets the cellulosic biofuel standard to the comparable value that was reported soonest after December 31, 2008.[31]

In contrast to its directions to EPA for setting the price of a cellulosic biofuel waiver credit, Congress afforded the Agency considerable flexibility in designing regulations specifying the permissible uses of the credits. The CAA states that EPA regulations "shall include such provisions, including limiting the credits' uses and useful life, as the Administrator deems appropriate to assist market liquidity and transparency, to provide appropriate certainty for regulated entities and renewable fuel producers, and to limit any potential misuse of cellulosic biofuel credits to reduce the use of other renewable fuels, and for such other purposes as the Administrator determines will help achieve the goals of this subsection." The final RFS2 provides a detailed discussion of how we designed the provisions for cellulosic biofuel waiver credits in keeping with the statutory language. In short, 2011 cellulosic biofuel waiver credits (or "waiver credits") are only available for the 2011 compliance year. Waiver credits will only be made available to obligated parties, and they are nontransferable and nonrefundable. Further, obligated parties may only purchase waiver credits up to the level of their cellulosic biofuel RVO less the number of cellulosic biofuel RINs that they own. A company owning cellulosic biofuel RINs and cellulosic waiver credits may use both types of credits if desired to meet their RVOs, but unlike RINs obligated parties are not permitted to carry waiver credits over to the next calendar year. Obligated parties may not use waiver credits to meet a prior year deficit obligation. Finally, unlike cellulosic biofuel RINs which may also be used to meet an obligated party's advanced and total renewable fuel obligations, waiver credits may only be used to meet a cellulosic biofuel RVO. An obligated party will still need to additionally and separately acquire RINs to meet their advanced biofuel and total renewable fuel obligations.

For the 2011 compliance period, since the applicable volume of cellulosic biofuel used to set the annual cellulosic biofuel standard is lower than the volume for 2011 specified in the CAA, we are making cellulosic waiver credits available to obligated parties for end-of-year compliance should they need them at a price of $1.13 per gallon-RIN. To calculate this price, EPA first determined the average wholesale

[30] More information on wholesale gasoline prices can be found on the Department of Energy's (DOE), Energy Information Administration's (EIA) Web site at: *http://tonto.eia.doe.gov/dnav/pet/hist/LeafHandler.ashx?n=PET&s=A103B00002&f=M.*

[31] *See* U.S. Department of Labor, Bureau of Labor Statistics (BLS), Consumer Price Index Web site at: *http://www.bls.gov/cpi/.*

(refinery gate) price of gasoline using the most recent 12 months of data available from the EIA Web site on September 30, 2010. Based on this data, we calculated an average price of gasoline for the period July 2009 to June 2010 of $1.97. In accordance with the Act, we then calculated the difference of the inflation-adjusted value of $3.00, or $3.10, and $1.97, which yielded $1.13. Next, we compared the value of $1.13 to the inflation-adjusted value of $0.25, or $0.26. The Act requires EPA to use the greater of these two values as the price for cellulosic biofuel waiver credits.

The derivation of this value is more fully explained in a memorandum submitted to the docket for this rulemaking,[32] and a more complete description of the statutory requirements and their application can be found in the RFS2 final rule.[33] The price for the 2012 compliance period, if necessary, will be set when we announce the 2012 cellulosic biofuel standard.

B. Assessment of the Domestic Aggregate Compliance Approach

In order to implement the renewable biomass requirements under the RFS2 program as set forth in the CAA, EPA established general requirements for renewable fuel producers to keep records on the types and feedstocks they use to produce their fuel, including specific records related to the land from which the feedstocks were harvested or otherwise obtained, if they generate RINs for the fuel produced from such feedstocks. We also established requirements for renewable fuel producers to report on their feedstocks on a quarterly basis. Similar requirements apply to importers who generate RINs for fuel produced outside of the U.S.

In response to comments we received on the RFS2 NPRM, we also finalized a separate approach for renewable fuel producers who use planted crops and crop residue from U.S. agricultural land. Producers who use such renewable biomass need not maintain documentation about the specific land from which the feedstocks are harvested, relieving them of the individual recordkeeping and reporting requirements. To enable this approach, EPA established a baseline number of acres for U.S. agricultural land in 2007 (the year of EISA enactment) and determined that as long as this baseline number of acres was not exceeded, it was unlikely that new land outside of the 2007 baseline would be devoted to crop production based on historical trends and economic considerations. We therefore provided that renewable fuel producers using planted crops or crop residue from the U.S. as feedstock in renewable fuel production need not comply with the individual recordkeeping and reporting requirements related to documenting that their feedstocks are renewable biomass, unless EPA determines through annual evaluations that the 2007 baseline acreage of agricultural land has been exceeded.

In the final RFS2 regulations, we stated that EPA will make a finding concerning whether the 2007 baseline amount of U.S. agricultural land has been exceeded in a given year and will publish this finding in the **Federal Register** by November 30 of the same year. If the baseline is found to have been exceeded, then producers using U.S. planted crops and crop residue as feedstocks for renewable fuel production would be required to comply with individual recordkeeping and reporting requirements to verify that their feedstocks are renewable biomass. We also stated that if, at any point, EPA finds that the total agricultural land is greater than 397 million acres, EPA will conduct further investigations regarding the validity of the aggregate compliance approach.

Based on data provided by the USDA Farm Service Agency (FSA) and Natural Resources Conservation Service (NRCS), we have estimated that U.S. agricultural land reached approximately 398 million acres in 2010, and thus did not exceed the 2007 baseline acreage.[34] However, this total acreage estimate is greater than the 397 million acre trigger point for further investigation, therefore EPA, with the help of USDA, will look further into the relevant data and review the factors related to U.S. agricultural land use over the coming months.

The data and methodologies employed to make this determination are described below.

1. Methodology

To set the 2007 baseline acreage for U.S. agricultural land in the RFS2 final rulemaking, we used USDA's Farm Service Agency's (FSA's) crop history data for 2007, which was the most complete, consistent, and reliable dataset available to EPA. From the FSA crop history data total acreage of 404.3 million acres, we subtracted 2.75 million acres, which represented the amount of land enrolled in USDA's Grasslands Reserve Program (GRP) and Wetlands Reserve Program (WRP), neither of which qualifies as existing agricultural land. We therefore established the 2007 baseline amount of existing U.S. agricultural land at 402 million acres. This is the amount of land we determined was available for the production of planted crops and crop residue in 2007 that would satisfy the renewable biomass provisions of the CAA.

To calculate the 2010 U.S. agricultural land acreage estimate, we followed a similar calculation methodology. We started with FSA crop history data for 2010, from which we derived a total estimated acreage of 401.6 million acres. We then subtracted the amount of land estimated to be participating in the GRP and WRP by the end of Fiscal Year 2010, 3.6 million acres, to yield an estimate of approximately 398.0 million acres of U.S. agricultural land in 2010. The USDA data used to make this calculation can be found in the docket to this rule.

In the preamble to the final RFS2 rule, we indicated that we would monitor total U.S. agricultural land annually using FSA crop history data as a primary determinant and USDA's satellite-based crop data layer (CDL) analyses as a secondary source to validate our annual assessment. The CDL data for 2009 were released at the beginning of 2010, and the CDL data for 2010 is similarly expected in early 2011. Because the schedule for the release of 2010 data falls after the date by which the RFS2 regulations state the annual U.S. agricultural land acreage determination must be made, we will use the 2009 and 2010 data, as appropriate and feasible, to validate our 2010 assessment, as discussed below.

2. Further Investigation

EPA stated in the final RFS2 rule that if we find that the total land used for the production of crops is greater than 397 million acres, we will conduct further investigations regarding the validity of the aggregate compliance approach. Because we estimate that total U.S. agricultural land acreage in 2010 was approximately 398 million acres, further inquiry into the aggregate compliance approach is warranted. This inquiry, to be carried out by EPA with assistance from USDA, will utilize other agricultural data, including USDA's 2009 and 2010 CDL data to the extent feasible, to validate the data used to make the U.S. agricultural land

[32] *See* memo to docket number EPA–HQ–OAR–2010–0133 from Scott Christian, on the subject of "Calculating the price for cellulosic biofuel waiver credits for compliance year 2011," dated October 20, 2010.

[33] 75 FR 14726–14728.

[34] *See* memo to docket number EPA–HQ–OAR–2010–0133 from Megan Brachtl, on the subject of "USDA data used for 2010 U.S. agricultural land determination," dated November 9, 2010.

determination for 2010. We will also consider potential uncertainties in the data used to make our determination. We anticipate that this investigation will be completed well before the deadline for publishing next year's agricultural land acreage determination.

VII. Comments Outside the Scope of This Rulemaking

In their comments responding to the NPRM, a number of parties used the opportunity to raise concerns that were not directly related to the issues and provisions we were addressing in the NPRM, such as setting the cellulosic biofuel standard, the proposed provision for delayed RINs, and the proposed provision for aggregate compliance for renewable biomass from foreign countries. Neither did these comments address setting the price for cellulosic biofuel credits or EPA's annual evaluation of the U.S. aggregate compliance approach for renewable biomass. Instead, they addressed issues associated with the following:

- EPA's petition process in § 80.1416 for approving new fuel pathways
- EPA's ongoing lifecycle GHG assessment for grain sorghum
- EPA's economic analyses related to expanded biofuels use and the impact of tax credits and tariffs
- Possible legislative amendments and possible EPA actions favored by commenters that would promote biofuel use

Some commenters also made requests for clarification of key definitions while others suggested modifications to the provisions regarding the use of cellulosic biofuel waiver credits. While we are taking these comments under consideration as we continue to implement the RFS2 program, these comments are outside the scope of today's action, and we are not providing substantive responses to them at this time.

VIII. Public Participation

Many interested parties participated in the rulemaking process that culminates with this final rule. This process provided opportunity for submitting written public comments following the proposal that we published on July 20, 2010 (75 FR 42238), and we considered these comments in developing the final rule. Comments and responses for issues raised in the public comments are included throughout this preamble.

IX. Statutory and Executive Order Reviews

A. Executive Order 12866: Regulatory Planning and Review

Under Executive Order (EO) 12866 (58 FR 51735, October 4, 1993), this action is a "significant regulatory action" because it raises novel legal or policy issues. Accordingly, EPA submitted this action to the Office of Management and Budget (OMB) for review under EO 12866 and any changes made in response to OMB recommendations have been documented in the docket for this action.

The economic impacts of the RFS2 program on regulated parties, including the impacts of the required volumes of renewable fuel, were already addressed in the RFS2 final rule promulgated on March 26, 2010 (75 FR 14670). This action sets the percentage standards applicable in 2011 based on the volumes that were analyzed in the RFS2 final rule or, for cellulosic biofuel, on a lower volume that reflects EPA's projection of cellulosic biofuel production volumes for 2011. The delayed RINs provision and the petition process for applying an aggregate approach to foreign-grown crops and crop residue have no adverse economic impact on regulated parties since they would either relieve a current restriction related to generation of RINs, or would reduce recordkeeping burdens for parties successfully utilizing the petition process. The announcement of cellulosic biofuel waiver credit price and EPA's annual assessment of the U.S. aggregate compliance approach also impose no adverse economic impact. The availability of cellulosic biofuel waiver credits provides increased flexibility to regulated parties, at a price established by a formula set forth in the CAA.

B. Paperwork Reduction Act

This rule contains new information collection requirements which will be submitted for approval to the Office of Management and Budget (OMB) under the *Paperwork Reduction Act,* 44 U.S.C. 3501 *et seq.* These information collection requirements are not enforceable until OMB approves them. The EPA ICR number 2398.02.

Specifically, this rule has a petition provision that EPA will use to authorize renewable fuel producers using foreign-grown feedstocks to use an aggregate approach to comply with the renewable biomass verification provisions, similar to that applicable to producers using crops and crop residue grown in the United States. See discussion in Section V.B. For this authorization, foreign based entities may petition EPA for approval of the aggregate compliance approach for crops and crop residue in a foreign country. If approved by EPA, such a petition will allow crops and crop residue produced in the foreign country to be counted as feedstock to make renewable fuel under the RFS2 program without the otherwise applicable recordkeeping requirements. Other provisions in this regulation will not impose any new information collection burdens on regulated entities beyond those already required under RFS2. The RFS2 information collections are identified by the following OMB control numbers: 2060–0637 (expiring March 31, 2013) and 2060–0640 (expiring July 31, 2013).

The information collection related to this final rule is required in order for EPA to evaluate and act on the petitions. Respondents may assert claims of business confidentiality (CBI) for any or all of the information they submit. We do not believe that most respondents will characterize the information they submit to us under this information collection as CBI. However, any information claimed as confidential will be treated in accordance with 40 CFR Part 2 and established Agency procedures. Information that is received without a claim of confidentiality may be made available to the public without further notice to the submitter under 40 CFR 2.203.

EPA estimates that there will be a total of 15 respondents (petitioners), each submitting one petition, for a total of 15 responses (petitions). The estimated burden annual burden, assuming 15 respondents, will be 200 hours and annual cost is estimated at $14,197. On a per respondent basis, EPA estimates a total annual hour burden per respondent of 13.33 hours and a total annual cost burden per respondent is $946.43. Burden is defined at 5 CFR 1320.3(b).

An agency may not conduct or sponsor, and a person is not required to respond to, a collection of information unless it displays a currently valid OMB control number. The OMB control numbers for EPA's regulations in 40 CFR are listed in 40 CFR part 9.

C. Regulatory Flexibility Act

The Regulatory Flexibility Act (RFA) generally requires an agency to prepare a regulatory flexibility analysis of any rule subject to notice and comment rulemaking requirements under the Administrative Procedure Act or any other statute unless the agency certifies that the rule will not have a significant economic impact on a substantial number of small entities. Small entities

include small businesses, small organizations, and small governmental jurisdictions.

For purposes of assessing the impacts of today's rule on small entities, small entity is defined as: (1) A small business as defined by the Small Business Administration's (SBA) regulations at 13 CFR 121.201; (2) a small governmental jurisdiction that is a government of a city, county, town, school district or special district with a population of less than 50,000; and (3) a small organization that is any not-for-profit enterprise which is independently owned and operated and is not dominant in its field.

After considering the economic impacts of today's rule on small entities, we certify that this action will not have a significant economic impact on a substantial number of small entities. This rule sets the annual standards for four types of renewable fuel, modifies the regulatory provision for the generation of delayed RINs, and establishes a process for parties to petition EPA to allow an aggregate approach to compliance with the renewable biomass provision for foreign-grown crops and crop residue that would be similar to that used in the U.S. Today's action also includes two administrative announcements: The price in 2011 for cellulosic biofuel waiver credits, and the results of EPA's annual assessment of the U.S. aggregate compliance approach. The impacts of the RFS2 program on small entities were already addressed in the RFS2 final rule promulgated on March 26, 2010 (75 FR 14670), and today's action does not impose any additional requirements or burdens on small entities.

D. Unfunded Mandates Reform Act

This action contains no Federal mandates under the provisions of Title II of the Unfunded Mandates Reform Act of 1995 (UMRA), 2 U.S.C. 1531–1538 for State, local, or tribal governments or the private sector. The action imposes no enforceable duty on any State, local or tribal governments or the private sector. Therefore, this action is not subject to the requirements of sections 202 or 205 of the UMRA.

This action is also not subject to the requirements of section 203 of UMRA because it contains no regulatory requirements that might significantly or uniquely affect small governments.

E. Executive Order 13132: Federalism

This rule does not have federalism implications. It will not have substantial direct effects on the States, on the relationship between the national government and the States, or on the distribution of power and responsibilities among the various levels of government, as specified in Executive Order 13132. Thus, Executive Order 13132 does not apply to this rule.

F. Executive Order 13175: Consultation and Coordination With Indian Tribal Governments

This action does not have tribal implications, as specified in Executive Order 13175 (65 FR 67249, November 9, 2000). This rule does not have tribal implications, as this rule will be implemented at the Federal level and impose compliance costs only on transportation fuel refiners, blenders, marketers, distributors, importers, and exporters. Tribal governments would be affected only to the extent they purchase and use regulated fuels. Thus, Executive Order 13175 does not apply to this action.

G. Executive Order 13045: Protection of Children From Environmental Health Risks and Safety Risks

EPA interprets EO 13045 (62 FR 19885, April 23, 1997) as applying only to those regulatory actions that concern health or safety risks, such that the analysis required under section 5–501 of the EO has the potential to influence the regulation. This action is not subject to EO 13045 because it does not establish an environmental standard intended to mitigate health or safety risks and because it implements specific standards established by Congress in statutes.

H. Executive Order 13211: Actions Concerning Regulations That Significantly Affect Energy Supply, Distribution, or Use

This rule is not a "significant energy action" as defined in Executive Order 13211, "Actions Concerning Regulations That Significantly Affect Energy Supply, Distribution, or Use" (66 FR 28355 (May 22, 2001)) because it is not likely to have a significant adverse effect on the supply, distribution, or use of energy.

I. National Technology Transfer and Advancement Act

Section 12(d) of the National Technology Transfer and Advancement Act of 1995 ("NTTAA"), Public Law 104–113, 12(d) (15 U.S.C. 272 note) directs EPA to use voluntary consensus standards in its regulatory activities unless to do so would be inconsistent with applicable law or otherwise impractical. Voluntary consensus standards are technical standards (*e.g.,* materials specifications, test methods, sampling procedures, and business practices) that are developed or adopted by voluntary consensus standards bodies. NTTAA directs EPA to provide Congress, through OMB, explanations when the Agency decides not to use available and applicable voluntary consensus standards.

This action does not involve technical standards. Therefore, EPA is not considering the use of any voluntary consensus standards.

J. Executive Order 12898: Federal Actions To Address Environmental Justice in Minority Populations and Low-Income Populations

Executive Order (EO) 12898 (59 FR 7629 (Feb. 16, 1994)) establishes federal executive policy on environmental justice. Its main provision directs federal agencies, to the greatest extent practicable and permitted by law, to make environmental justice part of their mission by identifying and addressing, as appropriate, disproportionately high and adverse human health or environmental effects of their programs, policies, and activities on minority populations and low-income populations in the United States.

EPA has determined that this rule will not have disproportionately high and adverse human health or environmental effects on minority or low-income populations because it does not affect the level of protection provided to human health or the environment. This action does not relax the control measures on sources regulated by the RFS2 regulations and therefore will not cause emissions increases from these sources.

K. Congressional Review Act

The Congressional Review Act, 5 U.S.C. 801 *et seq.,* as added by the Small Business Regulatory Enforcement Fairness Act of 1996, generally provides that before a rule may take effect, the agency promulgating the rule must submit a rule report, which includes a copy of the rule, to each House of the Congress and to the Comptroller General of the United States. EPA will submit a report containing this rule and other required information to the U.S. Senate, the U.S. House of Representatives, and the Comptroller General of the United States prior to publication of the rule in the **Federal Register**. A major rule cannot take effect until 60 days after it is published in the **Federal Register**. This action is not a "major rule" as defined by 5 U.S.C. 804(2) and therefore it is not subject to the Congressional Review Act. Therefore, this rule will be effective on the date of publication.

X. Statutory Authority

Statutory authority for the rule finalized today can be found in section 211 of the Clean Air Act, 42 U.S.C. 7545. Additional support for the procedural and compliance related aspects of today's rule, including the recordkeeping requirements, come from Sections 114, 208, and 301(a) of the Clean Air Act, 42 U.S.C. 7414, 7542, and 7601(a).

List of Subjects in 40 CFR Part 80

Environmental protection, Air pollution control, Diesel fuel, Fuel additives, Forest and forest products, Gasoline, Oil imports, Labeling, Motor vehicle pollution, Penalties, Petroleum, Reporting and recordkeeping requirements.

Dated: November 24, 2010.

Lisa P. Jackson,

Administrator.

■ For the reasons set forth in the preamble, 40 CFR part 80 is amended as follows:

PART 80—REGULATION OF FUELS AND FUEL ADDITIVES

■ 1. The authority citation for part 80 continues to read as follows:

Authority: 42 U.S.C. 7414, 7542, 7545, and 7601(a).

■ 2. Section 80.1405 is amended by revising paragraph (a) to read as follows:

§ 80.1405 What are the Renewable Fuel Standards?

(a) *Renewable Fuel Standards for 2011.*

(1) The value of the cellulosic biofuel standard for 2011 shall be 0.003 percent.

(2) The value of the biomass-based diesel standard for 2011 shall be 0.69 percent.

(3) The value of the advanced biofuel standard for 2011 shall be 0.78 percent.

(4) The value of the renewable fuel standard for 2011 shall be 8.01 percent.

* * * * *

■ 3. Section 80.1426 is amended by revising paragraph (g) to read as follows:

§ 80.1426 How are RINs generated and assigned to batches of renewable fuel by renewable fuel producers or importers?

* * * * *

(g) *Delayed RIN generation.*

(1) Parties who produce or import renewable fuel may elect to generate delayed RINs to represent renewable fuel volumes that have already been transferred to another party if those renewable fuel volumes meet all of the following requirements.

(i) The renewable fuel volumes can be described by a new pathway that has been added to Table 1 to § 80.1426, or approved by petition pursuant to § 80.1416, after July 1, 2010.

(A) For new pathways that EPA approves in response to petitions submitted pursuant to § 80.1416, complete petitions must be received by EPA by January 31, 2011.

(B) [Reserved]

(ii) The renewable fuel volumes can be described by a pathway that:

(A) Is biodiesel that is made from canola oil through transesterification using natural gas or biomass for process energy; or

(B) EPA has determined was in use as of July 1, 2010, for the primary purpose of producing transportation fuel, heating oil, or jet fuel for commercial sale.

(iii) The renewable fuel volumes were not designated or intended for export from the 48 contiguous states plus Hawaii by the renewable fuel producer or importer, and the producer or importer of the renewable fuel volumes does not know or have reason to know that the volumes were exported from the 48 contiguous states plus Hawaii.

(2) When a new pathway is added to Table 1 to § 80.1426 or approved by petition pursuant to § 80.1416, EPA will specify in its approval action the effective date on which the new pathway becomes valid for the generation of RINs and whether the fuel in question meets the requirements of paragraph (g)(1)(ii) of this section.

(i) The effective date for the pathway describing biodiesel that is made from canola oil through transesterification using natural gas or biomass for process energy is September 28, 2010.

(ii) [Reserved]

(3) Delayed RINs can only be generated to represent renewable fuel volumes produced in the 48 contiguous states plus Hawaii or imported into the 48 contiguous states plus Hawaii between July 1, 2010, and the earlier of either of the following dates:

(i) The effective date (identified pursuant to paragraph (g)(2) of this section) of the new pathway through which the fuel in question was produced; or

(ii) December 31, 2011.

(4) Delayed RINs must be generated no later than 60 days after the effective date (identified pursuant to paragraph (g)(2) of this section) of the pathway by which the fuel in question was produced.

(5) A party authorized pursuant to paragraph (g)(1) of this section to generate delayed RINs, and electing to do so, who generated RINs pursuant to 80.1426(f)(6) for fuel produced through a pathway described in paragraph (g)(1) of this section, and transferred those RINs with renewable fuel volumes between July 1, 2010 and the effective date (identified pursuant to paragraph (g)(2) of this section) of that pathway, must retire a number of gallon-RINs prior to generating delayed RINs.

(i) The number of gallon-RINs retired by a party pursuant to this paragraph must not exceed the number of gallon-RINs originally generated by the party to represent fuel described in paragraph (g)(1) of this section that was produced in the 48 contiguous states plus Hawaii or imported into the 48 contiguous states plus Hawaii, and transferred to another party, between July 1, 2010 and the earlier of either of the following dates:

(A) The effective date (identified pursuant to paragraph (g)(2) of this section) of the new pathway through which the fuel in question was produced; or

(B) December 31, 2011.

(ii) Retired RINs must have a D code of 6.

(iii) Retired RINs must have a K code of 2.

(iv) Retired RINs must have been generated in the same year as the gallon-RINs originally generated by the party to represent fuel described in paragraph (g)(1) of this section.

(A) For gallon-RINs originally generated in 2010 to represent fuel described in paragraph (g)(1) of this section, the generation year of retired RINs shall be 2010.

(B) For gallon-RINs originally generated in 2011 to represent fuel described in paragraph (g)(1) of this section, the generation year of retired RINs shall be 2011.

(6) For parties that retire RINs pursuant to paragraph (g)(5) of this section, the number of delayed gallon-RINs generated shall be equal to the number of gallon-RINs retired in accordance with paragraph (g)(5) of this section.

(7) A party authorized pursuant to paragraph (g)(1) of this section to generate delayed RINs, and electing to do so, who did not generate RINs pursuant to § 80.1426(f)(6) for renewable fuel produced in the 48 contiguous states plus Hawaii or imported into the 48 contiguous states plus Hawaii between July 1, 2010 and the effective date (identified pursuant to paragraph (g)(2) of this section) of a new pathway for the fuel in question, may generate a number of delayed gallon-RINs for that renewable fuel in accordance with paragraph (f) of this section.

(i) The standardized volume of fuel (V_s) used by a party to determine the RIN volume (V_{RIN}) under paragraph (f) of this section shall be the standardized

volume of the fuel described in paragraph (g)(1)(i) of this section that was produced in the 48 contiguous states plus Hawaii or imported into the 48 contiguous states plus Hawaii by the party, and transferred to another party, between July 1, 2010 and the earlier of either of the following dates:

(A) The effective date (identified pursuant to paragraph (g)(2) of this section) of the new pathway through which the fuel in question was produced; or

(B) December 31, 2011.

(ii) [Reserved]

(8) The renewable fuel for which delayed RINs are generated must be described by a pathway that satisfies the requirements of paragraph (g)(1) of this section.

(9) All delayed RINs generated by a renewable fuel producer or importer must be generated within EMTS on the same date.

(10) The generation year of delayed RINs as designated in EMTS shall be the year that the renewable fuel volumes they represent were either produced or imported into the 48 contiguous states plus Hawaii.

(i) For renewable fuel volumes produced or imported in 2010, the generation year of delayed RINs shall be 2010 and the production date specified in EMTS shall be 07/01/2010.

(ii) For renewable fuel volumes produced or imported in 2011, the generation year of delayed RINs shall be 2011 and the production date specified in EMTS shall be 01/01/2011.

(11) Delayed RINs shall be generated as assigned RINs in EMTS with a batch number that begins with "DRN", and then immediately separated by the RIN generator.

(12) The D code that shall be used in delayed RINs shall be the D code which corresponds to the new pathway.

(13) Except as provided in this paragraph (g), all other provisions in this Subpart M that pertain to the identification of fuels for which RINs may be generated, the generation and use of RINs, and recordkeeping and reporting, are also applicable to delayed RINs.

■ 4. Section 80.1454 is amended as follows:

■ a. By revising paragraph (g) introductory text.

■ b. By revising paragraph (g)(1).

■ c. By revising paragraph (g)(2) introductory text.

§ 80.1454 What are the recordkeeping requirements under the RFS Program?

* * * * *

(g) *Aggregate compliance with renewable biomass requirement.* Any producer or RIN-generating importer of renewable fuel made from planted crops or crop residue from existing U.S. agricultural land as defined in § 80.1401, or from planted crops or crop residue from existing agricultural land in a country covered by a petition approved pursuant to § 80.1457, is covered by the aggregate compliance approach and is not subject to the recordkeeping requirements for planted crops and crop residue at § 80.1454(g)(2) unless EPA publishes a finding that the 2007 baseline amount of agricultural land in the U.S. has been exceeded or, for the aggregate compliance approach in a foreign country, that the withdrawal of EPA approval of the aggregate compliance approach is warranted pursuant to § 80.1457(e).

(1) EPA will make findings concerning whether the 2007 baseline amount of agricultural land in the U.S. or other country covered by a petition approved pursuant to § 80.1457 has been exceeded and will publish these findings in the **Federal Register** by November 30 of the year preceding the compliance period.

(2) If EPA finds that the 2007 baseline amount of agricultural land in the U.S. or other country covered by a petition approved pursuant to § 80.1457 has been exceeded, beginning on the first day of July of the compliance period in question any producer or RIN-generating importer of renewable fuel made from planted crops or crop residue in the country for which such a finding is made must keep all the following records:

* * * * *

■ 5. Section 80.1457 is added to read as follows:

§ 80.1457 Petition process for aggregate compliance approach for foreign countries.

(a) EPA may approve a petition for application of the aggregate compliance approach to planted crops and crop residue from existing agricultural land in a foreign country if EPA determines that an aggregate compliance approach will provide reasonable assurance that planted crops and crop residue from the country in question meet the definition of renewable biomass and will continue to meet the definition of renewable biomass, based on the submission of credible, reliable, and verifiable data.

(1) As part of its evaluation, EPA will consider all of the following:

(i) Whether there has been a reasonable identification of the "2007 baseline area of land," defined as the total amount of cropland, pastureland, and land that is equivalent to U.S. Conservation Reserve Program land in the country in question that was actively managed or fallow and nonforested on December 19, 2007.

(ii) Whether information on the total amount of cropland, pastureland, and land that is equivalent to U.S. Conservation Reserve Program land in the country in question for years preceding and following calendar year 2007 shows that the 2007 baseline area of land identified in paragraph (a)(1)(i) of this section is not likely to be exceeded in the future.

(iii) Whether economic considerations, legal constraints, historical land use and agricultural practices and other factors show that it is likely that producers of planted crops and crop residue will continue to use agricultural land within the 2007 baseline area of land identified in paragraph (a)(1)(i) of this section into the future, as opposed to clearing and cultivating land not included in the 2007 baseline area of land.

(iv) Whether there is a reliable method to evaluate on an annual basis whether the 2007 baseline area of land identified in paragraph (a)(1)(i) of this section is being or has been exceeded.

(v) Whether a credible and reliable entity has been identified to conduct data gathering and analysis, including annual identification of the aggregate amount of cropland, pastureland, and land that is equivalent to U.S. Conservation Reserve Program land, needed for the annual EPA evaluation specified in § 80.1454(g)(1), and whether the data, analyses, and methodologies are publicly available.

(2) [Reserved]

(b) Any petition and all supporting materials submitted under paragraph (a) of this section must be submitted both in English and its original language (if other than English), and must include all of the following or an explanation of why it is not needed for EPA to consider the petition:

(1) Maps or electronic data identifying the boundaries of the land for which the petitioner seeks approval of an aggregate compliance approach.

(2) The total amount of land that is cropland, pastureland, or land equivalent to U.S. Conservation Reserve Program land within the geographic boundaries specified in paragraph (b)(1) of this section that was cleared or cultivated prior to December 19, 2007 and that was actively managed or fallow and nonforested on that date, and

(3) Land use data that demonstrates that the land identified in paragraph (b)(1) of this section is cropland, pastureland or land equivalent to U.S. Conservation Reserve Program land that was cleared or cultivated prior to December 19, 2007, and that was

actively managed or fallow and nonforested on that date, which may include any of the following:

(i) Satellite imagery or data.

(ii) Aerial photography.

(iii) Census data.

(iv) Agricultural survey data.

(v) Agricultural economic modeling data.

(4) Historical land use data for the land within the geographic boundaries specified in paragraph (b)(1) of this section to the current year, which may include any of the following:

(i) Satellite imagery or data.

(ii) Aerial photography.

(iii) Census data.

(iv) Agricultural surveys.

(v) Agricultural economic modeling data.

(5) A description of any applicable laws, agricultural practices, economic considerations, or other relevant factors that had or may have an effect on the use of agricultural land within the geographic boundaries specified in paragraph (b)(1) of this section, including information regarding the efficacy and enforcement of relevant laws and regulations.

(6) A plan describing how the petitioner will identify a credible and reliable entity who will, on a continuing basis, conduct data gathering, analysis, and submittal to assist EPA in making an annual determination of whether the criteria specified in paragraph (a) of this section remains satisfied.

(7) A letter, signed by a national government representative at the ministerial level or equivalent, confirming that the petition and all supporting data have been reviewed and verified by the ministry (or ministries) or department(s) of the national government with primary expertise in agricultural land use patterns, practices, data, and statistics, that the data support a finding that planted crops and crop residue from the specified country meet the definition of renewable biomass and will continue to meet the definition of renewable biomass, and that the responsible national government ministry (or ministries) or department(s) will review and verify the data submitted on an annual basis to facilitate EPA's annual evaluation of the 2007 baseline area of land specified in § 80.1454(g)(1) for the country in question.

(8) Any additional information the Administrator may require.

(c) EPA will issue a **Federal Register** notice informing the public of receipt of any petition submitted pursuant to this section and will provide a 60-day period for public comment. If EPA approves a petition it will issue a **Federal Register** notice announcing its decision and specifying an effective date for the application of the aggregate compliance approach to planted crops and crop residue from the country. Thereafter, the planted crops and crop residue from the country will be covered by the aggregate compliance approach set forth in § 80.1454(g), or as otherwise specified pursuant to paragraph (d) of this section.

(d) If EPA grants a petition to establish an aggregate compliance approach for planted crops and crop residue from a foreign country, it may include any conditions that EPA considers appropriate in light of the conditions and circumstances involved.

(e)(1) EPA may withdraw its approval of the aggregate compliance approach for the planted crops and crop residue from the country in question if:

(i) EPA determines that the data submitted pursuant to the plan described in paragraph (b)(6) of this section does not demonstrate that the amount of cropland, pastureland and land equivalent to U.S. Conservation Reserve Program land within the geographic boundaries covered by the approved petition does not exceed the 2007 baseline area of land;

(ii) EPA determines based on other information that the criteria specified in paragraph (a) of this section is no longer satisfied; or

(iii) EPA determines that the data needed for its annual evaluation has not been collected and submitted in a timely and appropriate manner.

(2) If EPA withdraws its approval for a given country, then producers using planted crops or crop residue from that country will be subject to the individual recordkeeping and reporting requirements of § 80.1454(b) through (d) in accordance with the schedule specified in § 80.1454(g).

[FR Doc. 2010–30296 Filed 12–8–10; 8:45 am]

BILLING CODE 6560–50–P

Federal Register

Thursday,
December 9, 2010

Part III

Consumer Product Safety Commission

16 CFR Part 1102

Publicly Available Consumer Product Safety Information Database; Final Rule

CONSUMER PRODUCT SAFETY COMMISSION

16 CFR Part 1102

Publicly Available Consumer Product Safety Information Database

AGENCY: Consumer Product Safety Commission.

ACTION: Final rule.

SUMMARY: The Consumer Product Safety Commission ("Commission," "CPSC," or "we") is issuing a final rule that would establish a Publicly Available Consumer Product Safety Information Database ("Database"). Section 212 of the Consumer Product Safety Improvement Act of 2008 ("CPSIA") amended the Consumer Product Safety Act ("CPSA") to require the Commission to establish and maintain a publicly available, searchable database on the safety of consumer products, and other products or substances regulated by the Commission. The final rule interprets various statutory requirements pertaining to the information to be included in the Database and also establishes provisions regarding submitting reports of harm; providing notice of reports of harm to manufacturers; publishing reports of harm and manufacturer comments in the Database; and dealing with confidential and materially inaccurate information.

DATES: *Effective Date:* This rule is effective January 10, 2011.

FOR FURTHER INFORMATION CONTACT: Mary Kelsey James, Director, Information Technology Policy and Planning, Consumer Product Safety Commission, 4330 East West Highway, Bethesda, MD 20814; telephone (301) 504–7213; *mjames@cpsc.gov.*

SUPPLEMENTARY INFORMATION:

I. Background

Section 212 of the CPSIA requires the Commission to establish and maintain a product safety information database that is available to the public. Specifically, section 212 of the CPSIA amended the CPSA to create a new section 6A of the CPSA, titled "Publicly Available Consumer Product Safety Information Database." Section 6A(a)(1) of the CPSA requires the Commission to establish and maintain a database on the safety of consumer products, and other products or substances regulated by the Commission. The Database must be publicly available, searchable, and accessible through the Commission's Web site. Section 6A of the CPSA sets forth specific content, procedures, and search requirements for the publicly available database. On May 24, 2010, we published a notice of proposed rulemaking at 75 FR 29156, which set forth the Commission's proposed interpretation and implementation of the Database provisions of section 6A of the CPSA. The comment period on the proposed rule ended on July 23, 2010. After reviewing and considering significant issues raised by the comments, the Commission is now promulgating a final rule on the statutory requirements of section 6A.

For several decades, the Commission has gathered and maintained a database of consumer complaints, known as consumer product incident reports. Such incident reports describe safety-related incidents involving the use of consumer products that fall within the scope of the Commission's jurisdiction. Pursuant to section 5(a) of the CPSA, the Commission collects information related to the causes and prevention of death, injury, and illness associated with consumer products. The Commission conducts studies and investigations of deaths, injuries, diseases, other health impairments, and economic losses resulting from accidents involving consumer products. In addition, pursuant to section 5(b) of the CPSA, the Commission may conduct research, studies, and investigations on the safety of consumer products and on improving the safety of such products. Currently, the Commission obtains information about product-related deaths, injuries, and illnesses from a variety of sources, including newspapers, death certificates, consumer complaints, and hospital emergency rooms. In addition, the Commission receives information from the public through its Internet Web site via forms reporting on product-related injuries or incidents.

To date, the data that the Commission collects and maintains on product safety have not been immediately available and searchable by the public. Before the CPSIA's enactment, the CPSA required that the Commission follow the notice provisions of section 6 of the CPSA before publicly disclosing any information that allowed the public to readily ascertain the identity of a manufacturer or private labeler of a consumer product. Section 6 of the CPSA contains requirements for giving notice of such information to the manufacturer or private labeler and providing them with an opportunity to comment on the information prior to public disclosure. Section 6 of the CPSA also requires the Commission to take reasonable steps to assure that disclosure of such information is accurate, fair in the circumstances, and reasonably related to effectuating the purposes of the CPSA. The Commission has applied the requirements in section 6 of the CPSA to Freedom of Information Act ("FOIA") requests as well. *See Consumer Product Safety Commission et al.* v. *GTE Sylvania,* 447 U.S. 102 (1980). The Commission issued regulations interpreting section 6 notice requirements at 16 CFR part 1101. Thus, consumers currently have access to incident data through reports and studies published by the Commission or through information provided in response to FOIA requests.

Section 6A of the CPSA creates a new disclosure requirement with respect to product safety-related incident reports, referred to as "reports of harm" in both the statute and the proposed rule. Specifically, section 6A of the CPSA excludes any incident report submitted for inclusion in the Database from the notice requirements of section 6(a) and (b) of the CPSA. Instead, section 6A of the CPSA sets up a new framework for collecting reports of harm, transmitting them to the manufacturer and private labeler for comment, and then posting them on a Database that is accessible on the Commission's Web site.

The notice of proposed rulemaking provided the public with an opportunity to understand how the Commission is intending to implement the new procedures in section 6A of the CPSA, and to provide comment. Prior to issuing a notice of proposed rulemaking, however, the Commission provided stakeholders with information about Database implementation, as well as offered several opportunities for stakeholder input and comment, all of which were discussed in the preamble to the proposed rule at 75 FR 29156–57. Prior Commission activities related to the Database include: Providing a detailed implementation plan to Congress; holding a public hearing on Database implementation; holding a public workshop, which sought comments on Database implementation; attending and speaking about the Database at various conferences; and creating the *http://www.saferproducts.gov* Web site, where updates on implementation of the Database are provided. Information on all of these Commission activities and public comments are available on the CPSC Web site at *http://www.cpsc.gov/about/cpsia/sect212.html.*

We received 37 comments on the proposed rule. After reviewing the comments, the Commission made several changes to the final rule, all of which are discussed in detail in section III below.

II. Statutory Authority

The Commission is issuing this rule pursuant to section 3 of the CPSIA which provides the Commission authority to issue regulations, as necessary, to implement the CPSIA.

III. Description of the Final Rule, Comments on the Proposed Rule, and the Commission's Responses

The final rule establishes a new 16 CFR part 1102, "Publicly Available Consumer Product Safety Information Database." The new part consists of four subparts:

Subpart A—Background and Definitions;

Subpart B—Content Requirements;

Subpart C—Procedural Requirements;

Subpart D—Notice and Disclosure Requirements.

Below, we describe and explain each subpart and section of the final rule, as well as describe and respond to significant issues raised by the comments on the proposed rule (75 FR 29156, May 24, 2010) pertaining to each section. In addition to comments on each of the subparts of the final rule, we have added a section "E" below to address Database implementation comments that are not directly related to a section of the proposed rule. To make it easier to identify comments and the Commission's responses, the word "Comment" will appear in italics before each comment description, and the word "Response" will appear in italics before the Commission's response. We have grouped comments based on the section of the proposed rule to which they pertain and their similarity, and we have numbered the comments to help distinguish between different comment themes. The number assigned to each comment summary is for organizational purposes only and does not signify the comment's value, importance, or order in which it was received.

A. Proposed Subpart A—Background and Definitions

1. Proposed § 1102.2—Purpose

Proposed § 1102.2 would describe the purpose for a new 16 CFR part 1102 titled "Publicly Available Consumer Product Safety Information Database," which is to set forth the Commission's interpretation, policy, and procedures to establish and maintain such Database.

We have finalized this section and made one clarification, which is to add the words "Publicly Available" to the full name of the Database.

2. Proposed § 1102.4—Scope

Proposed § 1102.4 would describe the scope of the rule to include the content, procedure, notice, and disclosure requirements for all information published in the Database.

We received one comment related to this section. The section has been finalized with one correction, which is to add the words "Publicly Available" to the full name of the Database.

Comment 1—One commenter states that incident reports involving over-the-counter drugs and dietary supplements should not be included in the Database because food and drugs are regulated and monitored by the U.S. Food and Drug Administration ("FDA"). The commenter notes that the Commission has regulatory authority only over product packaging, and asserts that consumers will inadvertently submit drug or supplement safety information to the Commission rather than to the manufacturer or the FDA. If the Commission includes complaints regarding product packaging in the Database, the commenter states that the Commission should not only instruct consumers that only product packaging complaints can be reported in the Database, but should also regularly monitor the Database to ensure that complaints involve only products over which the Commission has jurisdiction.

Response—Section 1102.10(d)(1) of the final rule states that to be included in the Database, a report of harm must, "at a minimum, include a word or phrase sufficient to distinguish the product as a consumer product, a component part of a consumer product, or a product or substance regulated by the Commission." A report of harm that does not identify a product or substance over which the Commission has jurisdiction will not be included in the Database. Every report of harm will be reviewed to ensure that the minimum requirements for publication are met before being published in the Database. Also, as with our current online incident report form, the Database will describe the products that are not within the Commission's jurisdiction, including food and drugs. This information will include links to the appropriate government agencies that do have jurisdiction. We have no intention of including reports of harm solely involving products or substances not within our jurisdiction, but will include all products and substances that do fall within our jurisdiction, including complaints about drug product packaging.

3. Proposed § 1102.6—Definitions

Proposed § 1102.6 would define certain terms related to the establishment and maintenance of the Database.

a. Proposed § 1102.6(a)—Terms Defined in § 3 of the CPSA Apply to the Database Rule

Proposed § 1102.6(a) would explain that, except as provided in proposed § 1102.6(b), the definitions set forth in section 3 of the CPSA apply to the Database rule. For example, section 3(a)(11) of the CPSA defines a "manufacturer" as "any person who manufactures or imports a consumer product." Because section 3(a)(11) of the CPSA defines "manufacturer," any reference to "manufacturer" in proposed part 1102 would have the same meaning.

One comment was received related to this section, which we have finalized without change.

Comment 2—One commenter states that the term "private labeler" should be defined in § 1102.6 of the final rule.

Response—Section 3(a)(12) of the CPSA defines "private labeler" as "an owner of a brand or trademark on the label of a consumer product which bears a private label." Because the CPSA defines "private labeler," there is no need to include such a definition in the final rule.

b. Proposed § 1102.6(b)—Terms Defined Relevant to § 1102

Proposed § 1102.6(b) would define certain terms or, in some cases, interpret terms already defined in section 3 of the CPSA.

Proposed § 1102.6(b)(1) would define "additional information" as any information that the Commission determines is in the public interest to include in the Consumer Product Safety Information Database.

No comments were received related to this definition, and we have finalized it with one change, which is to add "Publicly Available" to the full name of the Database.

Proposed § 1102.6(b)(2) would define "Commission" or "CPSC" as meaning the Consumer Product Safety Commission.

No comments were received related to this definition, and we have finalized it without change.

Proposed § 1102.6(b)(3) would define "consumer product" as having the same meaning as defined in section 3(a)(5) of the CPSA, but would further explain that "consumer product" includes any other products or substances regulated by the Commission. This further clarification is based on the statutory requirement in section 6A(b)(1)(A) of the CPSA for submission of reports of harm relating to the use of consumer products and other products or substances regulated by the Commission.

No comments were received related to this definition, and, for clarity, we have added "under any other act it administers" to the end of the definition.

Proposed § 1102.6(b)(4) would define "Consumer Product Safety Information Database," which is also referred to as the "Database," as the database on the safety of consumer products required to be established and maintained by the Commission as described in section 6A of the CPSA.

No comments were received related to this definition. However, on our own initiative, we did incorporate the shortened name of "Database" in the final rule and added the words "Publicly Available" to the full name of the Database.

Proposed § 1102.6(b)(5) would define "harm" as any injury, illness, or death, or any risk of injury, illness, or death, as determined by the Commission. This definition is taken from section 6A(g) of the CPSA, which states that "[i]n this section, the term 'harm' means (1) injury, illness, or death; or (2) risk of injury, illness, or death, as determined by the Commission."

We received several comments related to this definition which did not lead us to make any changes. However, we are changing this definition to be consistent with the statutory language.

Comment 3—Some commenters would remove from the definition of a report of harm the terms "or any risk of injury, illness, or death as determined by the Commission, relating to the use of a consumer product." The commenters argued that such a determination requires an arbitrary assessment that would require Commission resources to determine whether the report of harm represents a legitimate risk. According to these commenters, reports of harm addressing risks should come from the Commission in recall notices only, not from the general public.

Response—Section 6A(g) of the CPSA defines "harm," as used in this section of the statute, as "(1) injury, illness, or death; or (2) risk of injury, illness, or death, as determined by the Commission." Because the definition of "harm" is dictated by Congress in the statute, and Congress has plainly expressed its intent in the statute that the Database include reports of harm involving risks of harm, we will not remove this phrase from the definition of a report of harm. Moreover, the Database is meant to help us in our mission to protect the public against unreasonable risks of injury associated with the use of consumer products. Use of agency resources to assess risks is essential to our mission. While submitters must describe an illness, injury, or death, or risk of illness, injury, or death on the incident report form, each report of harm will be reviewed before publication to ensure that it meets the minimum requirements for publication set forth in § 1102.10(d).

Comment 4—Some commenters propose that "any risk of injury" be defined narrowly to account for the level of risk or the potential for injury to exclude reports of harm that "have near zero risk of causing injury." These commenters would strike the term "any" and replace it with a phrase such as "substantial risk of serious injury," which they state has historically been used by the Commission.

Response—We disagree with the commenters because they would have us interpret the statute in an unnecessarily narrow manner. However, we have stricken the word "any" and changed the comma to a semicolon after the first occurrence of the word "death" to make the definition consistent with the statutory language. Section 3(a)(14) of the CPSA already defines "risk of injury" as "a risk of death, personal injury, or serious or frequent illness."

We also decline to use the phrase "substantial risk of serious injury" to qualify the types of harm or risk of harm that may be placed into the Database. Such phrase is used once in 16 CFR 1115.13(c) to describe a firm's initial obligation to report hazards under section 15(b) of the CPSA. It applies to manufacturers, importers, retailers, and distributors who have received information that reasonably supports the conclusion that one of the factors in section 15(b) of the CPSA has been met. The phrase has no relevance to the types of information included in a report of harm.

Comment 5—One commenter states that the Commission should establish criteria for making determinations about risks of harm, arguing that speculative assertions or unsubstantiated opinions that a consumer could have been injured, without any supporting factual information indicating a nexus between the product or incident and a discernable and credible risk of injury, cannot provide the CPSC with the necessary basis for making the required determination to include these reports in the Database.

Response—The Commission has many years of experience categorizing harm or hazards and their risks related to the use of a consumer product based on a reported incident scenario. We will continue to rely on our expertise to review reports of harm submitted for inclusion in the Database and will determine whether the minimum requirements for publication are met.

Comment 6—One commenter states that the proposed rule does not delineate how the Commission will determine "harm" or "report of harm," and it does not define "risk."

Response—Section 6A(g) of the CPSA defines "harm," and we will adhere to this definition. We have maintained a database on injuries and risks of injury associated with the use of consumer products for many years, and will use our experience in reviewing reports of harm to ensure that the minimum requirements for inclusion in the Database are met. "Risk," by itself, is not defined in the proposed rule or in the CPSA, but section 3(a)(14) of the CPSA defines "risk of injury" as "a risk of death, personal injury, or serious or frequent illness."

Proposed § 1102.6(b)(6) would define "mandatory recall notice" as any notice to the public ordered by the Commission pursuant to section 15(c) of the CPSA.

No comments were received related to this definition, and we have finalized it with one grammatical change.

Proposed § 1102.6(b)(7) would define "manufacturer comment" as a comment made by a manufacturer or private labeler in response to a report of harm transmitted by the CPSC to the manufacturer or private labeler.

No comments were received related to this definition, and we have finalized it without change.

Proposed § 1102.6(b)(8) would define "report of harm" as any information submitted to the Commission through the manner described in § 1102.10(b) regarding an incident concerning any injury, illness, or death, or any risk of injury, illness, or death as determined by the Commission relating to the use of the consumer product.

We received comments regarding the definition of "harm" used in the proposed rule. As noted above in response to Comments 3 through 6, we are making minor modifications to the definition of "harm" as contained in section 6A(g) of the CPSA. Thus, we have finalized the definition of "report of harm" with one grammatical change, changing "an injury" to "any injury." We also changed the comma to a semicolon after the first occurrence of the word "death" and inserted a comma after the second occurrence of the word "death" to ensure that the definition in the final rule is more consistent with the definition of "harm" in the statute.

Proposed § 1102.6(b)(9) would define "submitter of a report of harm" as any person or entity that submits a report of harm.

No comments were received related to this definition, and we have finalized it without change.

Section 1102.6(b)(10) of the proposed rule would define "voluntary recall notice" to mean any notice to the public by the Commission relating to a voluntary corrective action, including a voluntary recall of a consumer product taken by a manufacturer in consultation with the Commission.

No comments were received related to this definition, and we have finalized it without change.

Comment 7—One commenter objects to use of the term "victim" in the proposed rule. The commenter states that the use of such a term implies a criminal or civil wrong, and suggests use of the word "consumer" as a more neutral term.

Response—We will not remove the term "victim" in the final rule, but agree that the term may be confusing to some without further clarification. We have used the term "victim" for many years to describe persons actually suffering a harm or risk of harm related to the use of a consumer product as compared to others who simply may have purchased or observed the product being used. The term "victim" is used on the current incident reporting form to collect information about the individual who was injured or exposed to a possible product related hazard. In the context of that form, the use of the term "victim" does not imply a criminal or a civil wrong. Thus, for purposes of this rule, "victim" continues to refer to any individual exposed to harm or risk of harm related to a possible product related hazard, and the term does not imply that the product caused an incident.

B. Proposed Subpart B—Content Requirements

1. Proposed § 1102.10—Reports of Harm

Proposed § 1102.10 would explain the requirements for reports of harm to be included in the Database.

a. Proposed § 1102.10(a)—Who May Submit

Proposed § 1102.10(a) would identify the category of submitters specified in section 6A(b)(1)(A) of the CPSA and further clarify the persons who may fall within each of the identified groups. The list of persons under each category is not exclusive, and the proposed lists are intended to provide a greater understanding of the type of person or entity that could fall within each category of submitter.

Proposed § 1102.10(a)(1) would state that the term "consumers" includes not only users of consumer products, but also family members, relatives, parents, guardians, friends, and observers of a consumer product being used.

We received one comment related to this section, and other comments relating to the definitions under proposed § 1102.10(a) resulting in a revision to the definition of "consumers" as described in response to Comment 8 through 17.

Comment 8—Several commenters state that the interpretation of "consumer" should not be so broad as to include those persons who were not injured by the product or who are not reliable reporters of the incident, such as those persons lacking firsthand knowledge of the product, its manufacturer, or the injury. The commenters also state that the proposed interpretation of "consumer" expands the potential for inaccurate information in the Database and goes beyond a reasonable interpretation of the term. Some commenters note, however, that information from these sources could be collected for the Commission's use, but should not be included in the Database.

Response—The plain statutory language does not require a submitter of a report of harm to have "firsthand knowledge." We have chosen an interpretation of "consumer" that comports with our experience in maintaining a database of consumer product incident reports. Historically, we have received reports of harm from any and all consumers in order to protect individuals who may use or enjoy consumer goods. Currently, parents, guardians, and family members are a major and important source of information collected for the most vulnerable segments of the population. In the most basic example, if the user of a consumer product is killed or seriously injured in the incident, or is an infant, he or she will be unable to enter the incident report. Parents, for example, may enter information related to consumer products used by their children, regardless of whether they personally witnessed the incident or purchased the product. Other consumers may possess important product safety information and, as a practical matter, the Commission does not have the resources to ascertain whether every submitter of a report of harm has firsthand knowledge or actually used the product. Therefore, following our current practice of receiving reports of harm from any and all consumers serves the purpose and intent of the Database and of our primary statutory mission, which is to protect consumers from unsafe products. Furthermore, a manufacturer is free to post a comment indicating whether they know if the submitter had firsthand knowledge or not. For these reasons, we disagree that inclusion of inaccurate information will necessarily result from our definition of "consumer." Moreover, everyone who submits reports of harm to the Database is legally obligated to provide truthful and accurate information as evidenced by their verification that they have done so.

We also note that reports of harm received from individuals in some of the other statutory categories, such as other government agencies, health care professionals, and public safety entities, will likely lack firsthand knowledge about an incident. For example, a physician who treats an individual who was injured by a consumer product is unlikely to have witnessed how or when the injury occurred, but the statute permits the physician to submit a report of harm. If we find that false and fraudulent reports are being submitted for inclusion in the Database, we will consider what legal actions to take to address the problem and proceed accordingly.

Proposed § 1102.10(a)(2) would state that the definition of "local, state, or federal government agencies" includes, but is not limited to, local government agencies, school systems, social services, child protective services, state attorneys general, state agencies, and all executive and independent federal agencies as defined in Title 5 of the United States Code.

No comments were received on this provision, and we have finalized it with only typographical changes.

Proposed § 1102.10(a)(3) would state that the definition of "health care professionals" includes, but is not limited to, medical examiners, coroners, physicians, nurses, physician's assistants, hospitals, chiropractors, and acupuncturists.

No comments were received on this provision, and we have finalized it with one grammatical change.

Proposed § 1102.10(a)(4) would state that the definition of "child service providers" includes, but is not limited to, day care centers, day care providers, pre-kindergarten school, and child care providers.

No comments were received on this provision, and we have finalized it with minor modifications changing "day care" to "child care."

Proposed § 1102.10(a)(5) would state that the definition of "public safety entities" includes, but is not limited to, police, fire, ambulance, emergency medical services, federal, state, and

local law enforcement entities, and other public safety officials.

No comments were received on this provision, and we have finalized it with one change for clarity. In response to comments relating to the definitions under proposed § 1102.10(a)(6), we added "and professionals, including consumer advocates and individuals who work for nongovernmental organizations, consumer advocates, consumer advocacy organizations, and trade associations so long as they have a public safety purpose" to the end of the definition.

Proposed § 1102.10(a)(6) would add "Others" to the list of submitters. The "Others" category is intended to include those persons who may not fit clearly within an identified category, but who may otherwise file a report as a "consumer." The "Others" category would include, but is not limited to, attorneys, professional engineers, investigators, nongovernmental organizations, consumer advocates, consumer advocacy organizations, and trade associations.

We received several comments on proposed § 1102.10(a)(6). Many commenters misinterpreted the proposal as an expansion of the list of people who can submit reports. This was not the intention. The proposal states, the five statutory categories of submitters are quite broad and, given that breadth, we had concluded that the list was intended to be nonrestrictive. *See* 75 FR at 29162. Currently, persons listed as examples under "Others" file reports of harm with us using our online incident reporting form by self-reporting as "consumers." However, anyone can be classified as a consumer even if they are also acting as a doctor, lawyer, investigator, consumer advocate, or trade complainant. Moreover, many individuals who report to us work for organizations with a public health and safety purpose and, thus may be included under the category "public safety entity." Since most if not all of the people listed in the "Others" category can fit in the categories Congress listed, we have deleted reference to "Others" in response to the comments.

Comment 9—Some commenters state that adding "Others" is contrary to the plain meaning of the statute. The commenters argue that section 6A(b)(1)(A) of the CPSA expressly limits who may submit reports, so the Commission is acting outside its authority by adding an "Others" category.

Response—Congress listed five broad categories of submitters and we have the authority to interpret these categories. As discussed above, the term "consumer" is quite broad, and we have consistently interpreted it in this rulemaking to include any and all consumers. This interpretation comports with our mission to protect individuals who may use or enjoy consumer products. Most of the persons and entities captured in the "Others" category are covered by the five broad categories of submitter listed in the statute. We have decided to delete the reference to "Others."

Comment 10—Some commenters argue that section 6A(b)(2)(B) of the CPSA, which establishes the minimum requirements for reports of harm to be included in the Database, uses the phrase "at a minimum" to set a floor to which the Commission may add requirements. Because this "at a minimum" language is missing from section 6A(b)(1)(A) of the CPSA, the commenters claim that we cannot add "Others" as a category of submitters.

Response—The five categories of submitters set forth in section 6A(b)(1)(A) of the CPSA are so broad that they include most submitters, eliminating the need to state that these categories are "at a minimum." Nevertheless, the category of "Others" will be deleted.

Comment 11—Some commenters state that adding an "Others" category contradicts existing regulations that require incident reports to be verified by those with personal or firsthand knowledge. The commenters argue that including reports from those without such knowledge would reduce the Database to a blog consisting of hearsay reports from people without personal knowledge who have a vested interest in increasing the number and severity of negative reports. The commenters state that there is no indication that Congress intended to override the Commission's long-standing requirements for verification of information it intends to make public.

Response—Congress provided a clear indication that the requirement in section 6(b) to take reasonable steps to assure accuracy does not apply to reports of harm included in the Database. Section 6A(f)(1) of the CPSA specifically provides that the provisions of sections 6(a) and (b) of the CPSA do not apply to reports of harm. Instead, verification is required for reports of harm as described in section 6A(b)(B)(v) of the CPSA, where a person submitting a report must verify that it is "true and accurate to the best of the person's knowledge." This requirement is set forth in § 1102.10(d)(7) of the final rule. Moreover, Congress intended for the Database to include reports by those without "firsthand knowledge" or "personal knowledge," as the statute expressly allows reports of harm to be submitted by those unlikely to have personal knowledge, such as other government agencies and public safety entities. However, Congress implemented three mechanisms to help control inaccuracies: The ability of the manufacturer to comment as set forth in section 6A(c)(2)(A) of the CPSA; the ability to remove material inaccuracies as set forth in section 6A(c)(4) of the CPSA; and the disclaimer requirement provided in section 6A(b)(5) of the CPSA.

Comment 12—Some commenters state that, other than consumers, the other categories of submitters listed in sections 6A(b)(1)(A)(2) through (b)(1)(A)(5) of the CPSA have various legal obligations to accurately and objectively record and report safety incidents, injuries, and suspected child abuse as part of their professional responsibilities. The commenters claim that adding an "Others" category will increase inaccurate reports of harm being entered into the Database and will also increase the possibility of duplicative reports being entered about the same incident.

Response—Everyone who reports information to the Database, whether a consumer, governmental entity, health care professional, child care provider or public safety entity, has a legal obligation to provide accurate information and will be required to verify that they have done so. For example, attorneys are subject to numerous ethical obligations and are likely to have a legal obligation to submit a report of harm if the client directs them to do so. As another example, 18 U.S.C. 1001 makes the knowing and willful submission of a materially false, fictitious or fraudulent report to a government agency criminal. In our experience, the category of submitter is more indicative of the type of detail that can be provided about an incident, rather than the quality or veracity of the data entered. Moreover, nothing in section 6A of the CPSA dictates that the individual who enters reports of harm be someone who purchased or used a product or who has a legal responsibility to report safety incidents to another government agency. Such a limitation would not serve the purpose of the Database. For these reasons and because the categories of "consumer" and "public safety entity" include most of the persons and entities listed in the proposed rule as reporting under the "Others" category, the commenters' concerns are unpersuasive.

With regard to duplicative reports, we note that the statutory list of submitters

allows for the submission of multiple reports of harm about the same incident because a consumer can submit a report as well as their health professional. In the Joint Explanatory Statement of the Committee of Conference on the CPSIA, the Conferees recognized the value of possible multiple reports regarding the same incident because they "could provide different relevant details and that information from those reports could be helpful to the public." The Database system software is designed to look for potential duplicates and multiple reports and to display them to staff. Commission staff will review potential duplicate and multiple reports and "associate" them, where appropriate, so that all reports on one incident will be reflected. As explained more fully below under § 1102.10(d), we are adding one more required field: "Incident date" so that Database users are provided a date, or approximate date, of the incident. We are also clarifying the field, "Category of submitter," by separating it from the verification requirement and displaying it in the Database as another required field so that Database users can see the category of submitter of the report of harm. We already had required this field in the NPR, but now we are separating it from the required verification. Such information should make the perspective of the submitter transparent and assist the agency in locating duplicate reports.

Comment 13—Some commenters state that adding an "Others" category of submitter is unreasonable and contrary to sound public policy. The commenters claim that the Database's purpose is to advance public safety by better informing consumers of potential product hazards, and that Congress selected reporters who contribute to this purpose—"those who use or observe the use of the consumer product (and thus the resulting harm or risk of harm) and those who may be involved in treating or responding to the harm." Congress chose to exclude those persons who may be commercially or financially motivated to submit reports of harm.

Response—Having decided that the five statutory categories of submitters include most of those individuals who had previously been included in the "Others" category, these persons shall be permitted to submit reports to the Database. The purpose of the Database is to provide timely access to safety-related consumer product incidents. The timeliness of the data release is a crucial aspect of the Database. Congress has expressed a public policy favoring prompt disclosure of these incidents in the interest of public safety. Indeed, Congress would not have us refuse to publish reports of harm involving deaths and serious injuries simply because the report was submitted by the consumer's counsel or the consumer's survivors. Accordingly, our evaluation of what is "unreasonable and contrary to sound public policy" differs from the commenters' evaluation. Our goal is to provide the public with timely product safety information, which would not be served by excluding valid reports of harm based on criteria that have little or nothing to do with the quality or validity of a report.

Nothing in the statute states that product safety information can come only from those who "use or observe the use" of the consumer product, and/or those who may be involved "in treating or responding" to the harm. Creating an artificial limitation that is not present in the statute would conflict with our experience in maintaining a database on the safety of consumer products. As explained above, not all submitters will personally use the consumer product or view the incident; however, that does not make their report invalid (*i.e.,* parents of minor children, relatives of victims who died or were seriously injured as a result of the incident, friends and family of elderly or disabled persons, and attorneys whose clients were killed or seriously injured may also submit reports). Persons included in the "Others" category may not have viewed the incident, but still may have a distinct, educated, and valuable understanding of the facts, either learned from the victim, or derived from investigation and analysis. Moreover, as a practical matter, the Commission cannot research every submission to the Database to determine who submitted it, whether they used or observed the use of the product, or whether they have some other bias or financial interest.

The fact that a submitter may have a professional interest in the report does not negate the truth of the report. If the Commission determines that a report is false, it will be removed or corrected. If the Commission determines that false incident reports are being filed, we will consider what legal actions to take to address the problem and proceed accordingly.

Comment 14—Some commenters say that limiting submitters to the five statutorily enumerated categories is supported by the legislative history of section 6A of the CPSA. The commenters state that the House and Senate versions of the bill were different regarding who could submit reports of harm. The Senate version originally permitted "other nongovernmental sources" to submit reports of harm for inclusion in the Database, but this version was not incorporated into the final bill. Thus, the commenters suggest that the removal of this provision indicates the intent to exclude "Others" from submitting reports of harm.

Response—We have previously noted the breadth of the entities listed in the statute that can file a report of harm and our conclusion that the list is intended to be nonrestrictive. 75 FR at 29162. The original Senate version of the bill also stated that health care professionals include "physicians, hospitals, and coroners" and that public safety entities include "police and fire fighters." All of these entities were removed in the final legislation. Nevertheless, we are unwilling to interpret section 6A of the CPSA as prohibiting physicians, hospitals, coroners, police, and fire fighters from submitting reports of harm. Having decided to remove the "Others" category, we conclude this comment is now moot.

Comment 15—Some commenters state that if the Commission intends to use section 6A(b)(3) of the CPSA [pertaining to additional information] to add reports of harm from "Others" to the Database, then the Commission must find that inclusion of those reports of harm are "in the public interest," and that the reports must also meet the requirements of sections 6(a) and (b) of the CPSA. Adding an "Others" category under section 6A(b)(1)(A) of the CPSA, the commenters allege, improperly evades the requirements for including additional information under section 6A(b)(3) of the CPSA, and makes that section superfluous.

Response—We interpret section 6A(b)(3) of the CPSA to mean that, in addition to the information required to be in the Database, including reports of harm, manufacturer comments, and recall notices, any additional categories of information must be in the public interest and subject to sections 6(a) and (b) of the CPSA. This interpretation is set forth in § 1102.16, which includes other categories of information in the Database other than reports of harm, manufacturer comments, and recall notices. Our interpretation is that additional information does not refer to reports of harm because all reports of harm meeting the minimum requirements for publication already are included in the Database. Additional categories of information could include, for example, internal CPSC reports, such as in-depth investigations, and product safety assessments.

Comment 16—Some commenters state that if the Commission includes reports of harm in the Database submitted by those in the proposed "Others" category,

then the increase in such submissions will "significantly increase the costs and burdens on both the Commission and manufacturers and distributors of consumer products to review, verify, and respond to the filings."

Response—This comment is speculative and contrary to our research and experience. We review every report of harm and send the reports to manufacturers for comment under section 6(c) of the CPSA. Thus, even if we could choose to exclude reports of harm from "Others" in the Database, we would still collect this information for our use, and would still send it to manufacturers under section 6(c) of the CPSA. Accordingly, we do not believe that the submission of reports of harm by "Others" would have significantly increased costs or burdens, and we will receive such reports from most of those submitters under one of the five enumerated categories in the statute.

Comment 17—Several commenters state that while reports of harm from those in an "Others" category may not be placed in the Database, the Commission may collect and use such reports for other hazard analysis purposes.

Response—As explained above, we believe that reports of harm submitted by most of those included in the "Others" category should be included in the Database under the five categories enumerated by the statute. We do not have the authority to exclude valid reports of harm from the Database. No valid public health and safety reason exists to exclude data that meet the minimum requirements for inclusion in the Database. Such an action would be contrary to the purpose and intent of the Database. We are focusing on the quality of the data submitted, as opposed to who submitted the report. Preserving reports of harm submitted by consumers in the "Others" category strictly for Commission use would not serve the purpose of timely providing the public with access to product safety information.

b. Proposed § 1102.10(b)—Manner of Submission

Proposed § 1102.10(b) would describe how a report of harm can be submitted for inclusion in the Database. Section 6A(b)(2)(A) of the CPSA requires that the Commission establish electronic, telephonic, and paper-based means for submitting a report of harm for inclusion in the Database. Accordingly, proposed § 1102.10(b) would describe four methods (Internet, telephone, electronic mail, and paper) for submitting reports. Proposed § 1102.10(b)(1) also would explain that submitters using the Internet will use an electronic form specifically developed to collect the report of harm in the Database. Proposed § 1102.10(b)(2) would further explain how submissions over the telephone will be accepted. Proposed § 1102.10(b)(3) and (b)(4) would explain how the Commission will deal with email, facsimile, and written submissions. Proposed § 1102.10(b)(5) would give the Commission the flexibility to provide other means of submission if new means become available.

The proposed rule left open for the final rule the office names and contact information to use for email, facsimile, and paper submissions of reports of harm. Accordingly, § 1102.10(b) has been finalized with several additions. First, we included the appropriate office names and contact information in § 1102.10(b)(3) and (b)(4). Second, we made a grammatical correction to use the short name for the Database adopted in § 1102.6(b)(4).

c. Proposed § 1102.10(c)—Size Limits of Reports of Harm

Proposed § 1102.10(c) would impose potential size limits on reports of harm where the size of such reports of harm, including attachments, might negatively impact the technological or operational performance of the system.

No comments were received on this section, which we have finalized without change.

d. Proposed § 1102.10(d)—Minimum Requirements for Publication

Proposed § 1102.10(d)(1) through (d)(6) would describe the minimum requirements for publication of reports of harm in the Database. The proposal would identify the minimum required categories of information stated in sections 6A(b)(2)(B)(i) through (v) of the CPSA, and further elaborate on the type of information included under each category.

We received several comments generally related to the minimum requirements for publication, which resulted in no substantive changes to the final rule. On our own initiative, however, we have made a grammatical correction to the full name of the Database and added the words "Publicly Available" to the full name of the Database.

Comment 18—One commenter states that the Commission should remind submitters to only file reports of harm for incidents of which they have firsthand knowledge, and actively should discourage complaints based on hearsay.

Response—For the reasons set forth in response to Comment 8 above, we will not restrict submissions of reports of harm for inclusion in the Database to only those who have firsthand knowledge. Reports of harm that meet the statutory minimum requirements for inclusion, and the requirements as set forth in § 1102.10(d) of the final rule, will be included in the Database.

Comment 19—Some commenters suggest that the final rule impose a time limit on when reports of harm may be included in the Database, to exclude old or stale data. Several commenters suggest a time limit of one year from the incident date, claiming that over time, data becomes inherently suspect.

Response—As a matter of statutory interpretation, we have decided to allow submitters to enter reports of harm about product related incidents regardless of when the incident occurred because Congress imposed no limitation in section 6A of the CPSA. Because many consumer products have a long use period, and many consumer products are purchased second hand or used rather than new, it is important to collect and maintain information on these products over time. Moreover, in our experience, consumers sometimes fail to submit a report of harm until after a recall is announced in the media. Regardless of the date of occurrence and the date of entry, all reports of harm must meet the minimum requirements for inclusion in the Database as set forth in section 6A of the CPSA and § 1102.10(d) of the final rule. Moreover, as set forth in response to Comment 30 below, the Commission has decided to require the incident date, or an approximate incident date, to include a report of harm in the Database. Users can determine for themselves what weight to accord an incident that is entered long after the date of occurrence. If a manufacturer or private labeler believes that the date of the incident is relevant to users of the Database, it may highlight this fact in its comment to the report of harm.

Comment 20—Several commenters note that the proposed rule does not indicate how long reports of harm and associated comments will remain in the Database. The commenters state that the final rule should impose a time limit after which information will be removed from the Database to ensure that the information remains helpful. The commenters also state that unless data has a time limit or sunset period, the Database may become overloaded with outdated information. The commenters suggest that if no recall occurs within one year of a report being entered, then the information should be removed but remain available through a FOIA request. Alternatively, the commenters

suggest that the Commission could tag information as "active reports" and "resolved reports."

Response—Setting a time limit or expiration date for reports of harm and related comments is inconsistent with the purpose of the Database. Certain hazard patterns may not emerge from the data within a specific time limit. Many consumer products have a long use period, and many consumer products are purchased used. Accordingly, it is important to collect and maintain information on products over time.

Moreover, there is no easy way to determine across all industries and all products when data about products may lose importance. For example, durable infant products, which may be purchased used, may become the subject of incident reports years after a product was purchased or even recalled. We have several examples of children being seriously injured by products that were recalled for the defect many years before. Consumers should have access to all data that the Commission has on file when they research recalls and reports of harm made about consumer products in the Database. As for the suggestion of making information available through FOIA, we believe that such a change would be contrary to the purpose and intent of the Database and would compel us to allocate resources to respond to FOIA requests concerning data that should be made available in the Database. Finally, as set forth in § 1102.10(i) of the final rule, all reports of harm submitted to the Commission become official records of the Commission in accordance with 16 CFR § 1015.1 and will be treated in accordance with that regulation, which defines agency records for purposes of the FOIA.

Comment 21—Several commenters state that the minimum information required to submit a report of harm for inclusion in the Database in § 1102.10(d) is not detailed enough to allow those reviewing the report to understand the incident adequately, to weed out duplicate reports, and to promote investment in the report and Commission activities by the submitter. One commenter states that, without more detailed information, manufacturers will not be able to respond meaningfully to reports of harm, which will mean that the Database contains inaccurate information about their products. Thus, in cases where the incident details are insufficient to make a determination of why an event occurred, one commenter believes that the Commission should not publish the report in the Database.

Response—We decline to amend the rule as suggested by the commenters. Determining why an incident occurred can sometimes be a time-consuming process; yet section 6A of the CPSA established procedural requirements that are measured in days. Congress is requiring us to create an "incident" database of "reports of harm," not causation determinations. Section 6A of the CPSA requires reports of harm to be posted in the Database quickly. Thus, we cannot refrain from processing or publishing reports of harm to determine why an incident occurred.

In response to comments on the proposed rule, however, we are clarifying that one additional minimum field requirement was added in the proposed rule, and has been maintained in the final rule, the "Category of submitter." We have considered comments on this issue, as described below, and decided to display this field in the Database. Also, in response to comments, we have decided to require an additional field "Incident date" for inclusion in the Database. These two additional field requirements will assist users in distinguishing duplicate or multiple reports and in determining what, if any, weight to give a particular report of harm. Moreover, these two additional pieces of information should be readily available and typically known by submitters of a report about a consumer product. On balance, those additional requirements should not deter a submitter from entering a legitimate report of harm.

Proposed § 1102.10(d)(1), "Description of the consumer product," would require a word or phrase sufficient to distinguish a product identified in a report of harm as a consumer product, a component of a consumer product, or a product or substance regulated by the Commission. This description could include the name (including the brand name) of the product. Other information, such as where the product was purchased, price paid, model, serial number, date of manufacture (if known), date code, or retailer, is identified as information that would be helpful to the description of a consumer product, but not required.

We received several comments about this section of the proposed rule, and for clarity we have finalized the rule with grammatical changes to reflect the original intent of the provision that certain information in the description of the consumer product will be optional.

Comment 22—Some commenters state that the proposed rule does not require a product name, model number, manufacture date, date code, date of purchase, or other descriptive information about a product. The commenters assert that the statute requires that the Database be searchable by date, product description, model name, and manufacturer's name to the extent practicable; therefore, at a minimum, a report of harm must contain a model number and a product name. Some commenters state that poor product identification will make it impossible for a manufacturer to comment, and that requiring that the information be included will make the Database more useful and less misleading.

Response—We agree that the more information included about a product, the easier it will be for the Commission and Database users to identify the product. Accordingly, the Database will prompt submitters for additional information about the product at issue, including, for example, product brand, model number, serial number, and date of manufacture. We encourage submitters to enter additional, helpful information for product identification in their reports of harm; however, we will not require submitters to provide all of the information suggested by the commenters. We have amended § 1102.10(d)(1) to reflect this position. Requiring too much detail about a product may deter individuals from submitting reports. In addition, we note that section 6A(b)(2)(B)(i) of the CPSA states that reports that provide a "description of the consumer product" meet the statutory minimum for product identification. We will review each report of harm to ensure that a consumer product over which the Commission has jurisdiction is identified. Section 1102.10(d)(1) states that "the description of the consumer product must, at a minimum, include a word or phrase sufficient to distinguish the product as a consumer product, a component part of a consumer product, or a product or substance regulated by the Commission." Thus, if we cannot identify a consumer product over which we have jurisdiction based on information in the report of harm, then the report will not meet the minimum requirements for publication.

As for the commenters' argument regarding the searchability of the Database, section 6A(b)(4) of the CPSA does not set forth minimum field requirements; rather it describes how users must be able to access data that already exists within the Database. In addition, section 6A(b)(4) of the CPSA requires that the Commission "categorize the information available in the Database in a manner consistent with the public interest and in such manner as it determines to facilitate

easy use by consumers and shall ensure, *to the extent practicable,* that the Database is *sortable and accessible* by * * * (B) the name of the consumer product * * *; [and] (C) the model name * * *." (emphasis added). We interpret this language to mean that when a report of harm contains information such as a model number, it should be "sortable and accessible" by such information. Thus, if a report of harm contains a model name or number, users will be able to search and sort based on this information.

Comment 23—Some commenters state that the description of a consumer product should be detailed enough so that the CPSC, the manufacturer, and a user of the Database will be able to identify the product.

Response—We agree that a description of the consumer product should be detailed enough to identify the product. Section 1102.10(d)(1) states that "the description of the consumer product must, at a minimum, include a word or phrase sufficient to distinguish the product as a consumer product, a component part of a consumer product, or a product or substance regulated by the Commission." Each report of harm will be reviewed before entry into the Database.

Comment 24—Some commenters ask us to clarify: (1) What information is required for a sufficient product description, and (2) how the staff will determine what the product is, and whether to post the report of harm in the Database.

Response—Section 1102.10(d)(1) establishes the minimum requirements for a description of the consumer product, and is consistent with section 6A(b)(2)(B)(i) of the CPSA, which simply requires that the report of harm contain "a description of the consumer product (or other product or substance regulated by the Commission) * * *." We will review each report of harm before entry into the Database. If we cannot distinguish the item described in a report of harm as a consumer product within the Commission's jurisdiction, then the report of harm will not satisfy the minimum requirements for inclusion in the Database.

Comment 25—Several commenters state that a product UPC Code should be required for entry into the Database. Another commenter suggested using Global Trade Item Numbers.

Response—We are interested in refining the ability of the Database to identify consumer products using these automatic identification technologies and our information technology staff currently is evaluating automatic identification technologies for use in future software versions of the Database. The rule is drafted broadly enough to enable such future operational change.

Proposed § 1102.10(d)(2) titled "Identity of the manufacturer or private labeler," would describe that a report of harm must name a manufacturer or private labeler for the report to be published.

One comment related to this section of the rule was received, which resulted in no changes to the final rule. However, on our own initiative, we clarified in the second sentence of the description that additional contact information may be provided for a manufacturer or private labeler, but is not required. Accordingly, the second sentence now states: "In addition to a firm name, identification of a manufacturer or private labeler may include, but is not limited to, a mailing address, phone number, or electronic mail address."

Comment 26—One commenter would require submitters to include traceability information in a report of harm. If the traceability information does not match to the stated importer, manufacturer, or retailer records, the name of that entity should not appear in the Database without further investigation and proof that the subject product belongs to the named firm, the commenter argued.

Response—We interpret this comment to mean that if a consumer product cannot be verified as belonging to a particular manufacturer or private labeler, then the name of such entity should not be included in the Database. Section 6A of the CPSA requires that if a report of harm meets all of the minimum requirements for publication, including identification of a manufacturer or private labeler, it must be transmitted to the manufacturer or private labeler identified. Such manufacturer or private labeler may comment on the report of harm, including identifying materially inaccurate information. If the product does not belong to the identified manufacturer or private labeler, the manufacturer or private labeler should inform us immediately, and if we are unable to determine the true identity of the manufacturer or private labeler, the report of harm will not be published in the Database.

The incident report form allows submitters to include additional details to help identify the consumer product. For example, the incident report form also asks the submitter for a description of the product (prompting for product name), brand name, model name or number, serial number, and manufacturer date code. The form also allows the submitter to upload photos or other attachments that may help us or the manufacturer or private labeler to identify the product.

Proposed § 1102.10(d)(3) titled "Description of the harm," would explain the requirements for describing a harm for a report of harm to be included in the Database. "Harm" as provided in section 6A(g) of the CPSA and in § 1102.6(b)(5), is an illness, injury, or death, or a risk of illness, injury, or death. The proposed rule contained a nonexclusive list of examples of the types of harm that could be included. Additionally, this section would explain that reports of harm, which relate solely to cost or quality of a product, without identifying any discernable bodily harm or risk of bodily harm, would not constitute "harm" for purposes of this part. A description of harm may include additional information, such as the severity of the injury.

We received several comments on this section of the proposed rule. We have finalized this section of the rule with corrections. We removed part of a sentence stating that the date on which the incident occurred is an example of the type of description that may be entered. We removed this language because "incident date," or an approximation of the incident date, is now a required field, as described in response to Comment 30 below. In addition, the rule has been revised to conform to the definition of "harm" in the statute.

Comment 27—Some commenters would remove the terms "risk of bodily harm" and "risk of injury" from § 1102.10(d)(3), and anywhere else in the proposed rule, because "[t]his database must be based on concrete instances and not on issues or injuries that may (or may not) occur."

Response—Section 6A(g) of the CPSA defines "harm" as used in this section of the statute as "(1) injury, illness, or death; or (2) *risk* of injury, illness, or death, as determined by the Commission" (emphasis added). Because Congress intended that risks of harm be included in the Database, we decline to revise the rule as suggested by the commenters. The Database is meant to help the Commission protect the public against unreasonable risks of injury associated with the use of consumer products. Submitters must describe an illness, injury, or death, or risk of illness, injury, or death on the incident report form. We will review each report of harm before publishing it in the Database to ensure that it meets the minimum requirements for publication.

Comment 28—Some commenters state that the severity of risk, meaning whether and what type of medical treatment was sought, should be a required field on a report of harm if the report of harm is to be included in the Database. The commenters argue that, without knowing the severity of the risk, the public, the Commission, or a manufacturer cannot judge the magnitude of the risk presented and, in turn, assess the appropriate response to that risk.

Response—Consistent with section 6A(b)(2)(B)(iii) of the CPSA, the final rules require the submitter to enter a description of the harm, which means the identification of a discernable illness, injury, or death, or risk of illness, injury, or death related to the use of a consumer product. While we agree that understanding whether medical treatment was sought is useful in determining the severity of a harm or risk of harm, the statute, by referring to risk of injury, illness, or death in defining "harm," does not require injury, illness, or death to have occurred. Accordingly, we will not require specific information about whether medical treatment was sought for a report of harm to be included in the Database. The incident report form, however, will allow for entry of such information.

Comment 29—Several commenters would define an incident causing harm more explicitly in § 1102.10(d)(3) by excluding reports of harm that relate solely to the cost, quality, customer satisfaction, or warranty disputes, or those that fail to state any discernable bodily harm or risk of bodily harm. The commenters state that Commission staff should review reports of harm and exclude those that do not address a safety issue so that the Commission and industry can focus on reports containing actual or potential harm. One commenter would limit harm to include both an actual incident and an injury as set forth in 16 CFR 1117.3 (which pertains to reporting requirements for choking incidents involving marbles, small balls, latex balloons, and other small parts).

Response—The proposed rule already would exclude reports relating solely to cost or quality. We agree that a report of harm that identifies only quality or cost issues and does not identify a bodily harm or risk of bodily harm does not meet the minimum requirements for inclusion in the Database. "Harm" is defined in § 1102.6(b)(5), consistent with section 6A of the CPSA, as "injury, illness or death; or risk of injury, illness or death, as determined by the Commission." Thus, reports of harm containing no discernable injury, illness, or death, or risk thereof, will not meet the minimum requirements for inclusion in the Database. Therefore, § 1102.10(d)(3) continues to state that "Incident reports that relate solely to the cost or quality of a consumer product, with no discernable bodily harm or risk of bodily harm, do not constitute 'harm' for purposes of this part."

We will not make the reporting requirements in 16 CFR 1117.3 for choking incidents involving marbles, small balls, latex balloons, and other small parts applicable to reports of harm for inclusion in the Database. Section 1117.3 creates a reporting requirement for firms that become aware of both an incident and, as a result of the incident, that a child died, suffered a serious injury, ceased breathing for any length of time, or was treated by a medical professional. In contrast, section 6A of the CPSA, through the definition of "harm" in section 6A(g) of the CPSA, covers a broader range of adverse events. The statute goes beyond "injury, illness, or death" (terms that would seem to encompass the events in § 1117.3) by adding "risk of injury, illness, or death * * *." Thus, imposing the reporting requirement in § 1117.3 onto § 1102.10(d) would be inconsistent with section 6A of the CPSA.

Comment 30—Several commenters would make the date of the incident a required field to help develop a response, minimize duplication, and reduce the likelihood of counterfeit reports being added to the database. For the same reasons, some commenters also would require the location of the incident to be noted. The commenters state that the burden on submitters is low, while manufacturers have only 10 days to respond. Accordingly, the commenters assert that requiring this information will help screen out duplicate reports.

Response—We agree that requiring the date of the incident or the approximate date of an incident to be included will help in associating reports of harm submitted concerning the same incident, without deterring submission of reports. The incident date, or an approximation, should be information that is readily known and, on balance, likely will be helpful to the Commission, Database users, and those who investigate incidents. For example, the incident date will help us locate and associate multiple reports of harm submitted about the same incident. Reports of harm submitted by different persons about the same incident will not be deleted, but will be associated so that Database users can discern that only one incident occurred, for example, as opposed to two or three if several reports are filed concerning the same incident. Gathering information from different sources may assist the Commission and other users in understanding the nature of the incident, the product involved, and any injuries sustained. Additionally, because we will not restrict reports of harm to recent incidents, the ability to display both an incident date and the report filing date will help users assess that report. Accordingly, we have revised § 1102.10(d)(4) to require an "Incident date," or an approximation, to be entered to display a report of harm in the Database.

As for the location of the incident, the form allows, but does not require, submitters to enter the location of the incident. Information regarding the location of the incident is not critical to product or hazard identification. Nevertheless, because the incident date and incident location fields are located adjacently on the form, we anticipate that submitters will be sufficiently prompted to include such information.

Proposed § 1102.10(d)(4) titled "Contact information" would require a submitter of a report of harm to provide his or her first and last name and a mailing address for the report to be published. Submitters also may provide other contact information, such as an email address or a telephone number, but such information is not required in order to publish the report.

We received several comments on this section, which we have finalized without substantive modification. "Contact information" has been renumbered in the final rule to § 1102.10(d)(6) to accommodate the addition of "Incident date" and "Category of submitter."

Comment 31—Several commenters address reports of harm by anonymous submitters. Some commenters state that we should not include these reports of harm in the Database. Some commenters state that we should not maintain anonymous reports for Commission use because veracity and trustworthiness are at issue and that such reports should not be used for compliance or enforcement proceedings because firms have no opportunity to investigate or refute the claims.

Response—Reports of harm submitted anonymously do not meet the minimum requirements for inclusion in the Database and will be excluded. Section 6A(b)(2)(B)(iv) of the CPSA requires that the report contain "contact information for the person submitting the report"; therefore, an anonymous report would not satisfy this statutory requirement. Although the submitter's contact

information will not be published in the Database, it must be included for the report of harm to meet the minimum qualifications for inclusion in the Database.

As for our use of anonymous reports, the Commission has accepted incident reports submitted anonymously for many years, and we will not change this practice now. Accordingly, we will maintain anonymous reports of harm for internal use. The Commission is concerned with product safety, regardless of who submits the information to the agency, and we cannot assume that anonymous reports of harm will not contain real and significant product safety issues. While it is preferable to have contact information to enable us to follow up and investigate incident reports with greater ease, the absence of contact information does not prevent us from investigating a consumer product as long as the product is identifiable.

With regard to the use in enforcement proceedings of reports submitted anonymously, this issue involves the Commission's exercise of enforcement power and discretion and our consideration of specific facts. Such information will continue to be considered on a case-by-case basis.

Comment 32—One commenter states that when consent is given, a submitter's contact information should be provided to the manufacturer to facilitate evaluation of the complaint. This same commenter states that we should require contact information to be given to the Commission to prevent fraud.

Response—When a submitter of a report of harm gives consent, his or her name and contact information will be provided to the manufacturer or private labeler. This provision, contained in § 1102.20(a)(1), is consistent with section 6A(b)(6) of the CPSA. Anonymous reports will not meet the minimum requirements for inclusion in the Database and will be excluded. As set forth above, we will continue to accept and maintain anonymously submitted reports for our own use, and we decline to make contact information required information for submission of such reports to the Commission.

Comment 33—One commenter suggests that we require every submitter to provide a phone number, and that Commission staff affirm the legitimacy of every report filed, and verify the contact information submitted in order for a report of harm to meet the minimum requirements for publication in the Database.

Response—We decline to revise the rule as suggested by the commenter. Section 6A(b)(5) of the CPSA and § 1102.42 direct us to provide clear and conspicuous notice to Database users that we do not guarantee the accuracy, completeness, or adequacy of the contents of the Database, and Section 6A(b)(2)(B)(v) of the CPSA and § 1102.10(d)(7) specify the form of verification required from submitters of reports of harm. No additional verification is required by the statute and would be contrary to the intent of 6A to provide prompt public release of reports of harm that otherwise meet the requirements for posting in the Database.

Comment 34—Several commenters state that the Database should encourage the release of contact information to manufacturers to enhance accuracy and product safety. One commenter states that consent to release contact information to manufacturers should be required to post a report of harm because it is the only way that manufacturers can resolve complaints and determine whether products are counterfeit. Another commenter notes that absence of contact information for the submitter is a complete bar to a manufacturer's ability to respond to a report of harm.

Response—We will transmit contact information to the manufacturer or private labeler pursuant to section 6A(b)(2)(B)(iv) of the CPSA. The statute does not permit us to disclose the name, address, or other contact information of a submitter of a report of harm without the submitter's express written consent. Neither transmission of a report of harm to a manufacturer or private labeler nor publication of a report in the Database is conditioned on a submitter agreeing to provide contact information to the manufacturer or private labeler. Consequently, we are not amending the rule to create such a requirement. We do not agree that the absence of contact information on a particular report prevents a manufacturer from commenting on a report of harm. Manufacturers may have received similar claims from other consumers. In fact, manufacturers often receive far more incident reports directly from consumers than the CPSC receives. In those cases, manufacturers and private labelers may be able to distinguish product issues more quickly than the CPSC and may be in a better position than the CPSC to respond, regardless of whether contact information is provided.

With regard to counterfeit products, neither section 6A of the CPSA nor the final rule addresses counterfeit products. We previously have conducted recalls on counterfeit products. A product's status as counterfeit does not change the safety implications and the potential need to remove such a product from the hands of consumers. We work with manufacturers to ascertain the true manufacturer of such counterfeit products when there is an issue concerning consumer safety.

Comment 35—One commenter would require identification of the victim by name for a report of harm to appear in the Database, although the information would be provided only to the Commission and would not be published. The commenter explains that identifying the victim would allow the Commission to cross-check data and prevent duplication, especially where different people report the same incident. The victim's identification would allow the Commission to clarify which reports are about the same incident if multiple reports are submitted.

Response—Section 6A(b)(2)(B) of the CPSA does not require identification of the victim by name, and we are not revising the rule as suggested by the commenter. Although knowing the victim's name would help associate reports of harm for the same incident, we can appreciate how a submitter might consider such information to be private. For example, some parents, while eager to report an incident and to provide details about the injury sustained and the age and gender of their child, may not want to provide the child's name. Likewise, other submitters, such as health care professionals or government agencies, may want to report details about a victim's injury, age, and gender, but may not know the victim's name or may have a legal obligation to keep the victim's name confidential. To help identify and associate duplicate reports, we have decided to add "Incident date," or an approximation, as a required minimum field. Providing such information should not be burdensome because typically it would be known or could be approximated.

Comment 36—Some commenters would require the submitter of a report of harm to provide either an e-mail address or a phone number as part of the required contact information in § 1102.10(d)(4) to allow for timely contact of the submitter and verification of the report of harm. The commenters argue that, without this information, it will be impossible for manufacturers to have a meaningful chance to verify the report of harm within the required 10 business days.

Response—Section 6A(b)(6) of the CPSA does not require the Commission

to release contact information to the manufacturer or private labeler unless the submitter provides written consent to do so. Accordingly, manufacturers and private labelers are not entitled to verify the report of harm with the submitter before they submit comments or before the report of harm is posted in the Database. We recognize, however, that when a submitter does consent to release his or her contact information to the manufacturer or private labeler, having an e-mail address or a phone number is the preferred method for contacting the submitter because of the time limitations imposed by section 6A of the CPSA. Thus, when a submitter consents to releasing his or her contact information to a manufacturer or private labeler, the Database will ask, but not require, the submitter to provide an e-mail address or phone number to allow for timely follow up.

Proposed § 1102.10(d)(5), entitled "Verification," would require submitters to verify that they have reviewed the report of harm and that the information contained in the report is true and accurate to the best of the submitters' knowledge, information, and belief. As originally proposed, this section also required, as part of the verification process, that submitters of reports of harm indicate into what category they fit (*i.e.,* consumer, government agency, health care professional).

We received several comments related to this section. We have finalized the first two sentences without modification. We deleted the last two sentences regarding the category of submitter, as discussed below in response to Comment 40, and this section has been renumbered to 1102.10(d)(7).

Comment 37—Several commenters state that the final rule should require submitters to make an affirmation or oath regarding the truth of the information submitted in order to be included in the Database.

Response—We agree. This is already a statutory requirement, and we have required this in § 1102.10(d)(7).

Comment 38—Several commenters state that the incident report form should include a notation regarding the penalties for filing a false report to ensure that accurate information is submitted. The commenters say that the Commission should take an aggressive stance to discourage malicious and false information from being submitted and pursue enforcement actions, including seeking monetary penalties.

Response—If we receive false reports, we will take all appropriate actions available to remove materially inaccurate information from the Database and seek appropriate legal remedies against those involved. We have declined to add a reference about penalties because we agree with some of our public hearing participants who indicated that such a statement could chill or intimidate a submitter from filing a legitimate report. We reviewed other agency databases like Safercar.gov and noted that no such statement exists on their incident reporting forms. Therefore, we determined that to make the Database user friendly to all submitters of reports of harm, we would not include the notation.

Comment 39—Several commenters state that a report to Congress, which included a mock up of the incident report form, displayed a static, noncheckable verification of the report of harm. These commenters assert that the Database should require consumers to make an attestation by clicking on a button in the online incident report form. One commenter states that submitters should be able to "opt in" to submitting their contact information to the manufacturer or private labeler, and that, if they do not agree to provide the information, then we should collect statistical information on the reasons for refusal.

Response—We agree that submitters should be required to affirmatively check a box for verification of the report of harm. However, the commenters appear to have been examining an early mockup of Database screens that were meant solely as an illustration and not an actual representation of the Database. Submitters of reports of harm will, in fact, be required to select or check a box to identify that they are verifying the report of harm in the online incident report form. Submitters will also be able to affirmatively select, or "opt in," to send their contact information to the manufacturer. If such an option is not selected, however, we will not collect statistical information on the reasons for refusal. Congress gave submitters the option of whether to provide their contact information to manufacturers and private labelers, and we believe it would be an unproductive use of CPSC resources to collect data on a submitter's reasons for refusing to submit their contact information to manufacturers and private labelers.

Comment 40—One commenter would require the category of person submitting the report of harm for a report to be included in the Database. The commenter states that such information would provide context for database users who may place different weight on the report based on this information. The commenter adds that it is important to distinguish multiple reports of harm submitted on the same incident and to see the value and insight provided by each reporter.

Response—Proposed § 1102.10(d)(5) would include the category of submitter as a minimum field requirement. Although identification of the category of submitter is required information, the proposed rule stated that the information would not be published in the Database. We agree that the category of submitter is an important piece of information to collect and display so that Database users can better understand not only who submitted the report of harm but also the relationship of the submitter to the victim. It is especially important to help users understand the submitter's perspective when the Database may include multiple reports on the same incident. Accordingly, to clarify that "Category of submitter" is a minimum requirement for inclusion of a report of harm in the Database, we have revised the final rule to create a new § 1102.10(d)(5) titled "Category of submitter," and the "Verification" section previously at § 1102.10(d)(5) has been renumbered as § 1102.10(d)(7). Section 1102.10(d)(5) now reads as follows: "Category of submitter. Indication of which category the submitter is in (consumer, government agency, health care professional, etc. * * *) from § 1102.10(a)." We have removed similar language from the "Verification" section.

Comment 41—One commenter would have us provide the category of submitter for a report of harm to manufacturers. The commenter notes that § 1102.10(d)(5) states that the information will be required at verification but will not be published in the Database. The commenter also claims that there is no reason or justification for depriving Database users of this information.

Response—As set forth above in response to the previous comment, the category of submitter remains a required field, and has been removed from the "Verification" section to § 1102.10(d)(5) of the final rule. For the reasons discussed above, information on the category of submitter will be transmitted to the manufacturer or private labeler, and will be displayed in the Database.

Comment 42—Some commenters suggest using e-mail verification and validation to ensure that reports of harm are not "spam" (*i.e.,* a form of e-mail where the same message is sent in large quantities to multiple parties). The commenters state that a report of harm should not be published unless the report can be validated.

Response—We considered using e-mail verification and validation

technologies, but decided not to incorporate these features because we did not want to deter submitters by creating additional steps, external to the incident report form, for them to enter a report of harm. However, we have incorporated other software design features to minimize computer-generated reports of harm, such as implementing Completely Automated Public Turing test to tell Computers and Humans Apart ("CAPTCHA") challenge-response tests. CAPTCHA is a technology intended to enable a computer system to distinguish between humans and computers. The computer challenges the user to complete a test (such as retyping text that has been distorted); a human will be able to complete the test, but a computer would not. As new technologies become available, we will incorporate them consistent with industry and federal government best practices.

Proposed § 1102.10(d)(6) titled "Consent" would explain that the submitter of a report of harm must consent to inclusion of the report of harm in the Database for the report to be published. If no consent is provided by the submitter, then the report will not be published in the Database.

Several comments were received, resulting in no substantive changes to the final rule. We renumbered "Consent" in the final rule to § 1102.10(d)(8), to accommodate the addition of "Incident date" and "Category of submitter."

Comment 43—One commenter suggests that, on the incident report form, the language related to consents be consistent and suggests using "May we" for the consent to provide contact information to manufacturers as well as the consent to include the report of harm in the Database. The commenter states that this language may encourage consumers to provide contact information to manufacturers to enhance consumer safety and would allow for proper investigation of the complaint.

Response—The commenter is focusing on language contained on a draft of the incident report form rather than language in the proposed rule itself. We agree that it would be appropriate to make the language consistent for the consents collected from submitters of reports of harm; therefore, we have changed the language on the incident report form so that both of the consents collected begin with "May we."

Comment 44—One commenter states that the term "verification" implies a level of CPSC validation of reports of harm that is unlikely to exist and that is in contrast to the disclaimer. The commenter suggests using the term "self-verification."

Response—Section 6A(b)(2)(B)(v) of the CPSA uses the term "verification" to explain that the submitter must state that the information is true and accurate to the best of the person's knowledge. One dictionary definition of "verify" is "to confirm or substantiate by oath." *See http://www.merriam-webster.com/dictionary/verify.* Because the term is correctly applied, easy to understand, and consistent with section 6A(b)(2)(B)(v) of the CPSA, we are not amending the rule as suggested by the comment.

e. Proposed § 1102.10(e)—Additional Information Requested on a Report of Harm

Proposed § 1102.10(e), regarding "Additional information requested on a report of harm," would describe the Commission's ability to seek other categories of voluntary information. In the preamble to the proposed rule, we invited comment on whether additional categories should include demographic data, such as race, or additional data about the product in question, such as whether the product still contained all of its original parts, or had been altered in any way that was not in accordance with a manufacturer's instructions.

Several comments were received related to this section, which has been finalized with a clarification as to the appropriate consent for minors.

Comment 45—One commenter states that the Commission should request, but not require, the following information on a report of harm to substantiate the claim: (1) Verification that the label instructions were followed; (2) the date on which the harm occurred; (3) a brief description of the incident, including how the product was being used, where it was being used, a description of what happened, whether other products were being used, how much product was used over time; and (4) whether the manufacturer was contacted before submitting the report of harm.

Response—We will collect more information about an incident on a report of harm than is minimally required to include the report in the Database. We will display such additional information, if consent is provided. For example, the current online incident report form asks whether the manufacturer has been contacted before filing a report of harm. We will continue to collect this information on the new reporting form. Also, as set forth in response to Comment 30, we have decided to make the incident date, or an approximate incident date, required information on a report of harm. The detail of an incident has been, and will continue to be, important information on a report of harm. The incident report form will have space for a narrative description of the incident, with guidance on the types of information that should be included. Finally, we will not specifically ask whether label instructions were read or followed because it unnecessarily implies that the consumer may be at fault. Manufacturers must evaluate safety with respect to the intended use, as well as the reasonably foreseeable misuse of a product.

Comment 46—One commenter states that the Commission should require the submitter to retain the product for at least one year.

Response—Currently, we request, but do not require, that a submitter retain the product for at least 30 days so that a CPSC investigator can review and inspect the product, if necessary. We will continue to advise submitters on the new version of the incident report form to retain the product for at least 30 days. We do not believe that section 6A of the CPSA gives us the authority to impose product retention requirements on individuals as a condition of their submitting reports of harm to the Database.

f. Proposed § 1102.10(f)—Information Not Published

Proposed § 1102.10(f), "Information not published," would describe the information that will not be published in the Database, including the name and contact information of the submitter of a report of harm; the victim's name and contact information (if provided); photographs depicting a person or injury because of privacy concerns or because the Commission has determined that they are not in the public interest; medical records without the consent of the person about whom such records pertain (or that person's parent or guardian if the person is a minor); confidential information; materially inaccurate information; reports of harm retracted by submitters who indicate in writing to the Commission that they supplied materially inaccurate information; and/or any other material submitted on or with a report of harm that the Commission determines is not in the public interest to publish. In making such a public interest determination, the Commission will consider whether the information is related to a product safety purpose served by the Database, including whether the information helps Database users to identify a consumer product; identify the manufacturer or private labeler of a

consumer product; understand the risk of harm related to the use of a consumer product; or understand the relationship between the submitter of a report of harm and the victim.

Several comments were received related to this section. We changed "materially inaccurate information" to "information determined to be materially inaccurate" to be consistent with the statute. We have also made two grammatical changes, one to (f)(7), changing it from "Submitters of reports of harm may retract reports at any time * * *" to "Reports of harm retracted at any time by the submitters of those reports," and one to (f)(8) deleting the words "to publish." In addition, we added language clarifying that the Commission will exclude from publication in the Database consents and verifications associated with the submission of a report of harm. This change reflects our response to comment 65 and is consistent with § 1102.12(e).

Comment 47—One commenter states that § 1102.10(f)(3) should limit photographs to pictures of whole products, solely for identification purposes. The commenter asserts that the Commission should prohibit photographs of injuries, components, or people, and states that such pictures are not in the public interest and should not be published.

Response—We agree that, for product identification purposes, photographs of the whole product are often the most useful. However, close-up photographs of the product labeling or the defect at issue may involve photographing a component part of the product. We also have jurisdiction over component parts of consumer products. Accordingly, we are not revising the rule as suggested by the commenter.

Section 1102.10(f)(3) provides that photographs that the Commission determines are not in the public interest will not be published, "including photographs that depict a person or injury or constitute an invasion of personal privacy based on the Privacy Act of 1974, Public Law 93–579 as amended." Upon reflection, we will not and cannot, prevent submitters from uploading photographs and documents that may be helpful to the Commission in any subsequent investigation, including photographs of injuries. However, we recognize that some photographs may be inappropriate for publishing in the Database. Therefore, we will review every photograph and attachment to determine whether it is relevant to the report of harm, violates any person's privacy, and is in the public interest to publish. Product photographs are likely to always be found to be in the public interest to display. Photographs from which a person can be identified will not be published, unless the photograph is altered in such a way that it could not be used to identify a person. Photographs of injuries where a person cannot be identified may be published.

Thus, we changed "photographs that depict a person or injury or constitute an invasion of personal privacy" to "photographs that could be used to identify a person or photographs that would constitute an invasion of personal privacy." This change reflects the Commission's desire to allow photographs of injuries to be published, including those that depict or represent an image of a person, as long as the image could not be used by a Database user to determine the identity of the individual in the picture. The Commission will still exercise discretion and may decline to post a picture it determines is not in the public interest because it is too gruesome.

Comment 48—Some commenters approve of the Commission's use of criteria under proposed § 1102.10(f)(8) when exercising discretion regarding what goes into the Database when it is in the "public interest." The commenters state that the proposed criteria will ensure that a wide variety of information will be published.

Response—We agree and have finalized this section with one grammatical change deleting the word "determination."

Comment 49—One commenter states that, if the Commission publishes attachments to a report of harm, the Commission should ensure that a submitter's or a victim's private information is not published in the Database.

Response—Consistent with § 1102.10(f), we will not publish a submitter or victim's name or personally identifying information contained in any attachment, or any other information inconsistent with the Privacy Act of 1974, or the public interest, without the appropriate legal consents. Each attachment will be reviewed for content, and if necessary, not displayed or will be redacted before publication to exclude such information.

Comment 50—Some commenters ask whether a submitter can withdraw a report of harm.

Response—As set forth in § 1102.10(f)(7), a submitter may retract a report at any time, if he or she indicates, in writing, to the Commission that he or she supplied materially inaccurate information. The reason that we are not permitting submitters to freely withdraw a report of harm is our concern that submitters may be subject to external pressure to withdraw reports of harm for any number of reasons, including settlement agreements with manufacturers conditioned on such withdrawal.

g. Proposed § 1102.10(g)—Reports of Harm From Persons Under the Age of 18

Proposed section 1102.10(g), entitled "Reports of harm from persons under the age of 18," would state that the Commission will not accept reports of harm submitted by persons under the age of 18 years without the consent of the parent or guardian of that person. The rationale for requiring consent on reports by a minor is the fact that age of legal consent in many jurisdictions is 18 years old. Review of a report of harm by a parent or guardian will also ensure that information about a harm or risk of harm is being disclosed publicly with the parent's consent, which addresses concerns related to the privacy of such information. Further, if a parent or guardian reviews the report, consent may also improve the accuracy of the information that the report contains.

Two comments were received related to this section, which has been finalized without change.

Comment 51—One commenter says that the minimum age to submit a report of harm should be 18 years old. Reports regarding injuries to minors should be submitted by a parent or guardian rather than the injured minor to ensure a degree of maturity in submitters and to increase accuracy.

Response—We agree. __ This requirement is already contained in § 1102.10(g). No one under 18 may submit a report of harm without a parent or guardian submitting his or her own contact information and approving the submission.

Comment 52—One commenter states that the proposed rule does not require a reporter to provide his or her age, but does restrict those under 18 from submitting a report of harm. The commenter states that, while the CPSC may intend to include this in the reporting form, age and consent are omitted from § 1102.10(d)(4).

Response—The language in § 1102.10(g) accurately reflects the intended requirement and how the information is conveyed on the reporting form. Age of the submitter of a report of harm is not, and was not intended to be, a required field. However, submitters will be prompted to certify that they are 18 years old or older. If they are not, a parent or guardian must provide a name and

complete mailing address, and submit the report of harm. A submitter cannot complete a report of harm without certifying that he or she is 18 years of age or older.

h. Proposed § 1102.10(h)—Incomplete Reports of Harm

Proposed § 1102.10(h) on "Incomplete reports of harm" would explain that information received related to a report of harm that is incomplete because it does not meet the requirements for submission or publication will be maintained for internal use.

Several comments were received related to this section, which has been finalized without modification.

Comment 53—Several commenters address incomplete reports of harm in proposed § 1102.10(h). The commenters claim that incomplete reports of harm should not be published in the Database. Some commenters suggest that consumers be able to return to incomplete reports of harm to finish them at a later date. The commenters also state that the Commission may keep incomplete reports of harm for its own use, but other commenters state that the Commission should not maintain incomplete reports of harm for its own use.

Response—The comments raised a point of clarification regarding reports of harm. An abandoned report of harm is a report that may be complete or is incomplete but is never "submitted" by the consumer by pressing the "submit" button in the online form. Abandoned reports will not be kept by the Commission. In contrast to an abandoned report, an incomplete report of harm is submitted by pressing the "submit" button in the online form. Incomplete reports of harm are considered incomplete reports because they do not meet the minimum requirements for publication in the Database, as set forth in § 1102.10(d), and therefore, will not be published in the Database. Under section 5(a)(1) of the CPSA, we have an obligation to "maintain an Injury Information Clearinghouse to collect, investigate, analyze, and disseminate injury data, and information, relating to the causes and prevention of death, injury, and illness associated with consumer products." Because of this mandate, for many years we have maintained a database on consumer product safety incidents, including information submitted online. The incident report form for reports of harm developed for the Database, both online and paper formats, will replace the incident report form currently in use. Regardless of whether reports of harm meet all of the requirements for submission into the Database, we will continue to maintain useful data for internal use under section 5(a)(1) of the CPSA as long as such information is submitted. A report that is not eligible for inclusion in the Database may still contain important information. For example, some reports will not meet publication requirements because the submitter failed to enter a required field. Other submitters may enter all of the substantively required fields, but the report may fail to qualify for inclusion in the Database because the submitter did not consent to publication.

Regarding the ability to save a report of harm, submitters who register a password will be able to save a report of harm, and to return to the report for up to 30 days to edit and submit it. Once the submitter presses "submit," the report of harm is deemed officially submitted. Once the report has been submitted, we will review the report to determine whether the minimum requirements for publication have been met. Reports of harm that are not submitted within 30 days of initiating the report are considered abandoned, and will not be maintained by the Commission.

Comment 54—Some commenters ask whether we will notify a manufacturer if an incomplete report of harm is filed.

Response—Reports of harm that do not meet the minimum qualifications for publication in the Database will not be sent to the manufacturer or private labeler pursuant to section 6A of the CPSA. However, such reports of harm may be sent to the manufacturer or private labeler pursuant to section 6(c) of the CPSA. We are currently considering whether notices under section 6(c) of the CPSA will be sent to the manufacturer through the Business Portal being developed for notices under section 6A of the CPSA. Regardless of how they are transmitted, a notice of incident report under section 6(c) of the CPSA will follow the time frames in existence now, and will not be subject to the shorter time frames for notices under section 6A of the CPSA.

i. Proposed § 1102.10(i)—Official Records of the Commission

Proposed § 1102.10(i), "Official records of the Commission," would explain that reports of harm accepted by the Commission become official records of the Commission in accordance with 16 CFR 1015.1, and that alteration (or disposition) of these records can only be undertaken in accordance with the procedures specified in this Part.

No comments were received related to this section, which has been finalized with one modification to reflect that reports "submitted to" the Commission will become official records of the Commission.

2. Proposed § 1102.12—Manufacturer Comments

Proposed § 1102.12 would identify the process for who may submit manufacturer comments in response to receiving a report of harm.

a. Proposed § 1102.12(a)—Who May Submit

Proposed § 1102.12(a) would state that manufacturers or private labelers who receive a report of harm from the CPSC may submit a comment if the report of harm identifies such manufacturer or private labeler.

We received several comments related to this section, which has been finalized without change.

Comment 55—One commenter felt that industry members, other than those specifically identified in the report of harm, should be able to submit comments on a report of harm. According to this commenter, § 1102.16 authorizes the Commission to include in the Database any additional information it determines to be in the public interest.

Response—We are not revising the proposed rule as suggested by the commenter. Section 6A(c)(1) of the CPSA contains the procedural requirements for transmission of a report of harm to a manufacturer or private labeler. Transmission is required when a report contains the minimum requirements for publication, as set forth in section 6A(b)(2)(B) and § 1102.10(d) of the final rule. If these minimum requirements are satisfied, then the statute requires the Commission, to the extent practicable, to transmit the report to the *manufacturer or private labeler identified in the report*. If the Commission transmits such report to a manufacturer or private labeler pursuant to section 6A(c)(1) of the CPSA, the manufacturer or private labeler who receives the report from the Commission may submit comments to the Commission on the information contained in such report, pursuant to section 6A(c)(2) of the CPSA (containing the procedural requirements for submitting comments in response to a report of harm). Therefore, based upon a plain reading of the statute, we believe that the procedural requirements of section 6A(c) of the CPSA, concerning both transmission and commenting, are unambiguous, and relate only to manufacturers or private labelers who are identified in a report of harm and

allowing only that manufacturer or private labeler to post a responsive comment.

Comment 56—One commenter suggests that the Database present only anonymous, aggregated information regarding the submitters, but allow the named, registered manufacturer to see the information on the submitter for follow up purposes. The commenter states that withholding submitter contact information would inhibit premature litigation by shielding submitters from general searches by unsolicited law firms, and at the same time allow submitters to seek and retain counsel at their own initiative, if necessary.

Response—We agree but for reasons other than those offered by the commenter. We believe that the statute is unambiguous in its exclusion from the Database of a submitter's contact information; therefore, we will not make a submitter's contact information publicly available in the Database. Section 6A(b)(6) of the CPSA expressly prohibits the disclosure of the name, address, or other contact information of any individual or entity that submits a report of harm to the Commission. The only exception to this is where the submitter consents, for verification purposes, to provide his or her contact information to the manufacturer or private labeler identified in the report of harm. In such a case, this information will be provided to the manufacturer or private labeler identified in the report of harm.

Comment 57—One commenter states that manufacturers and private labelers should have sufficient opportunity to comment on reports of harm in the Database. The commenter is concerned that the private labeler should have the opportunity to comment on a report of harm, regardless of whether a manufacturer identified in such report provides comments or not. Additionally, this commenter asks for additional time to comment on reports of harm.

Response—Where both a manufacturer and private labeler are identified in a report of harm, we will provide the opportunity to comment to each. Prior to publication, each entity will then have up to 10 days to provide comments on the report of harm. If we receive comments from both the manufacturer and private labeler, along with the consent to publish such comments, we will publish both comments in the Database. If transmission is made to both a manufacturer and a private labeler, yet we only receive comments from one entity, along with the consent to publish such comments in the Database, we will publish those comments in the Database. However, we disagree that additional time to comment is necessary or even permitted under the statute, given that simultaneous transmission will be made to any identified manufacturer or private labeler in a report of harm, and the existence of unambiguous statutory timeframes for transmission of reports of harm and publication of such reports to the Database.

Comment 58—One commenter asks whether licensors would be considered private labelers and, if so, what would be the procedure for handling reports of harm relating to a consumer product with multiple licenses.

Response—We do not consider licensors to be separately addressed by the statute, so a licensor must be identified as either a private labeler or manufacturer in order to receive a report of harm for comment.

b. Proposed § 1102.12(b)—How To Submit

Proposed § 1102.12(b) would provide the mechanism by which comments would be submitted; it would be via an online Business Portal, where the manufacturer would be able to register to submit comments on a secure, nonpublic portal provided through the Commission's Database. The proposal also would allow comments to be submitted by electronic mail or regular mail directed to the Commission's Office of the Secretary.

Several comments were received related to this section, resulting in no substantive changes to the final rule. On our own initiative, we made two corrections in the final rule. We corrected an internal citation error in § 1102.12(b)(1), changing the citation from § 1102.20(e) to (f), and we updated § 1102.12(b)(2) to include an email address for the Office of the Secretary.

Comment 59—One commenter suggests that manufacturers or private labelers be allowed to designate more than one employee or representative to comment on their behalf.

Response—We have designed the Business Portal such that transmission of a report of harm will be made to the registered account user and additional recipients who can receive the notification of that transmission. Through the Business Portal, we will permit businesses to designate multiple email recipients, but allow only one account holder to submit a response. This will enable notification to more than one person per account in the event that someone is out of the office or not available; at the same time it will ensure that duplicate or multiple reports are not received from the same manufacturer/private labeler.

Comment 60—One commenter suggests that manufacturers or private labelers be able to group common reports of harm found in the Business Portal, and provide a single response that can be tied to all of such reports of harm.

Response—The ability of a manufacturer or private labeler to group common reports of harm and provide a single response is not currently a design feature of the Database software program. However, we are currently evaluating how this may be incorporated into the technology for inclusion in a subsequent release of the software. The rule is drafted with sufficient flexibility to accommodate such a future modification without requiring revision of the rule.

C. Proposed § 1102.12(c)—What Must Be Submitted

Proposed § 1102.12(c)(1) through (c)(4) would specify that the Commission will publish a manufacturer's comments related to a report of harm if the comment specifically relates to a report of harm; contains a unique identifier assigned to the report; includes the manufacturer's verification of the truth and accuracy of its comment; includes a manufacturer's affirmative request that its comment be published; and consents to such publication. These requirements must be met for the manufacturer's comment to be published in the Database.

We received no comments on this provision. On our own initiative, however, we have finalized this section with clarifications. Section 1102.12(c) has been corrected to state that manufacturer comments will be published subject to § 1102.24 (on confidential information) and § 1102.26 (on materially inaccurate information). In addition, § 1102.12(c)(2) clarifies that every report of harm has a unique identifier that must be stated by the manufacturer or private labeler submitting a comment on a report of harm.

d. Proposed § 1102.12(d)—Information Published

Proposed § 1102.12(d) would explain that the Commission will publish a manufacturer's comments and the date such comments were submitted to the CPSC in the Database.

No comments were received on this section of the proposed rule. However, on our own initiative, we clarified that a manufacturer's comments will be published in the Database subject to

§ 1102.24 (on confidential information) and § 1102.26 (on materially inaccurate information).

e. Proposed § 1102.12(e)—Information not Published

Proposed § 1102.12(e) would explain that the Commission will not publish the actual consents and verifications obtained from the manufacturer for such publication.

We received no comments on this provision, and have finalized it without change.

3. Proposed § 1102.14—Recall Notices

Proposed § 1102.14 would state that information in a voluntary or mandatory recall notice will be made accessible and searchable to the public in the Database.

We received one comment on this section of the rule, which we have finalized without modification.

Comment 61—One commenter states that mixing recall information with incident report information may cause confusion, and that recall information must be clearly identified.

Response—Including recall information in a product search is vital to Database users, so that they can immediately see whether a product has been recalled, in addition to viewing reports of harm involving the product. Accordingly, the search display screen will clearly identify recall information. Reports also will be displayed in a manner that identifies the nature of such information. Both will be clearly distinguishable as separate items in the Database.

4. Proposed § 1102.16—Additional Information

Proposed § 1102.16 would state that in addition to reports of harm, manufacturer comments, and recall notices required to be in the Database pursuant to section 6A(b)(1) of the CPSA, the Database will include any additional information that we determine is in the public interest, consistent with the requirements of section 6(a) and (b) of the CPSA.

Several comments were received related to this section, which has been finalized without modification.

Comment 62—One commenter states that this provision does not specify who may submit the additional information that the CPSC decides to include in the Database. The commenter states that this section provides the ideal location for industry members—other than the named company or other professional organization—to comment on the incident or injury.

Response—Section 6A(b)(3) of the CPSA states that, in addition to the reports of harm received by the Commission, the Database shall include, consistent with the requirements of Section 6(a) and (b) of the CPSA, any additional information that we determine to be in the public interest. The statute does not require that manufacturers or private labelers, other than those who are identified in a report of harm, be able to submit comments on that report of harm. Therefore, we are not revising the rule as suggested by the commenter. However, where information is not contained in a report of harm, but is contained in other material that we may be reviewing for release under the FOIA, we will follow the provisions of section 6(a) and (b) of the CPSA for any proposed disclosure of such information.

Comment 63—Some commenters say that we should act expeditiously to include staff reports, research, and other relevant information in the Database pursuant to section 6A(b)(3) of the CPSA and proposed § 1102.16.

Response—The initial Database requirements are set up so that the initial Database launch will only include the statutorily required contents, including reports of harm, manufacturer comments, and recall information. This provides us with the opportunity to observe and analyze the operation of the Database, and to assess how many reports of harm are actually submitted; how many meet minimum requirements and are sent to manufacturers for comment; and how many, and in what time frame, reports are posted to the Database. Therefore, the decision to include additional information in the Database under this provision, such as staff research reports, reports of epidemiologic in-depth investigations, or any other information, will be determined based on the operational requirements of the Database, and after sections 6(a) and (b) of the CPSA have been followed. Note, however, that many Commission staff research and reports are already publicly available on the Commission's Web site at *http://www.cpsc.gov* and will continue to be available at this site.

C. Proposed Subpart C—Procedural Requirements

1. Proposed § 1102.20—Transmission of Reports of Harm to Identified Manufacturer or Private Labeler

Proposed § 1102.20 would describe the information contained in a report of harm that would and would not be transmitted to a manufacturer or private labeler.

a. Proposed § 1102.20(a)—Information Transmitted

Proposed § 1102.20(a) would state that the name and contact information of the submitter of a report of harm, photographs, and medical records will not be transmitted to the manufacturer or private labeler without consent of the submitter and any other legally responsible person (in the case of photographs and medical records).

We received several comments on this section, which resulted in no changes. However, on our own initiative, we clarified the opening sentence of this section to clearly state that manufacturers and private labelers will receive all information on a report of harm, provided that the report meets the minimum requirements for publication. We also clarified (a)(1) to indicate that written consent could be in the form of checking a box on a report of harm. We also revised the discussion of "photographs that will not be transmitted" to conform the language used to the change to 1102.10(f)(3) discussed in response to comment 47 above.

Comment 64—Some commenters ask whether manufacturers will be notified when an incomplete report of harm is filed.

Response—Although the comment does not explain the reference to incomplete reports of harm, we interpret the commenter's statement as asking whether manufacturers will be notified if an incomplete report of harm is filed. Under section 6A(b)(2) of the CPSA, we would not notify a manufacturer or private labeler if a report of harm does not contain the minimum requirements for publication as set forth in the statute and § 1102.10(d). Therefore, we would not transmit such a report to the manufacturer or private labeler for comment, nor publish such a report in the Database. However, under section 6(c) of the CPSA, the Commission has adopted a practice of notifying identified manufacturers in incident reports that it receives from submitters, based on the requirement in section 6(c) of the CPSA to "communicate to the extent practicable information as to any significant risk of injury associated with such product." Therefore, to the extent that a specific product and manufacturer is identified in an incomplete report of harm, we will continue to follow the practice of notifying the manufacturer pursuant to section 6(c) of the CPSA. Although such information will not be published in the Database, the information will continue to be transmitted to the manufacturer for

possible comment and release under section 6(b) of the CPSA.

Comment 65—One commenter states that the consumer's consent about whether his or her contact information should be provided to the manufacturer should be displayed in the Database. The commenter says that providing such information is important, and that the absence of consent for contact information to be transmitted to the manufacturer may indicate less capability to verify the report. The commenter claims that the preamble to the proposed rule stated that this information would be displayed, but the codified text did not.

Response—We are not revising the rule as suggested by the commenter. We recognize that section 6A(b)(2)(B)(iv) of the CPSA requires a report of harm submitted for inclusion into the Database to include contact information for the person submitting the report, and that section 6A(b)(3) of the CPSA authorizes the Commission to include in the Database "any additional information it determines to be in the public interest." However, it is difficult to see how a submitter's decision not to transmit his or her contact information to a manufacturer or private labeler could be sufficiently in the public interest to display in the Database. Submitters may have a variety of reasons for withholding their consent to transmit contact information, including simply an unwillingness to talk to the manufacturer. In any case, the submitter's refusal to consent to the transmission of his or her contact information does not necessarily reflect on the accuracy or truthfulness of the information presented in the report of harm. Given that a submitter's reasons for withholding consent may be varied, we do not see any public interest in having the Database declare whether the submitter of a report of harm consented to the transmission of his or her contact information to the manufacturer or private labeler. Thus, we have chosen not to display this information.

Absence of submitter contact information is not a bar to an investigation, but we recognize that the absence of contact information may make it more difficult for firms to investigate specific reports of harm. However, if a manufacturer or private labeler believes that such information would have been helpful, it can address that fact in a comment on the report of harm.

b. Proposed § 1102.20(b)—Limitation on Use of Contact Information

Proposed § 1102.20(b) would follow the statutory limitation in section 6A(b)(6) of the CPSA on the use of a submitter's contact information by the manufacturer or private labeler for verification only and no other purpose. Proposed § 1102.20(b)(1) through (b)(4) would explain that verification could be related to the identity of the requester; the consumer product, including name, serial or model number; the harm or risk of harm described in the report of harm; and/or a description of the incident related to the use of the consumer product.

We have finalized this provision by deleting the words "and/or" after proposed § 1102.20(b)(3); and adding a new (b)(5) Incident Date; and a new (b)(6) Category of submitter, consistent with the changes to § 1102.10(d) for minimum requirements of information contained in a report of harm; by replacing the words "is limited to" to "may include;" and making typographical changes.

Comment 66—Some commenters state that we should discourage manufacturers, retailers, distributors and their representatives from harassing or intimidating submitters of reports because the consumer will suffer harm from misuse of the contact information. The commenters claim that the Commission should set the expectation that serious consequences will occur if a manufacturer misuses such information. In contrast, another commenter states that the Commission should make the submitter's name and contact information available if requested by the manufacturer or retailer, and that contact of a consumer by a manufacturer should not be restricted once the consumer consents. Commenters argue that the language is inflexible in this sense.

Response—With regard to the comment on making a submitter's name and contact information available if requested by a manufacturer or retailer, or not restricting contact between a manufacturer and submitter after the submitter has consented to have his or her contact information sent to the manufacturer, the commenter may have misinterpreted the statute. Section 6A(b)(6) of the CPSA explicitly prohibits us from disclosing a submitter's contact information if the submitter has not consented; and, as explained immediately above, it also declares that the consumer information provided to a manufacturer may not be used or disseminated to any other party for any purpose other than verifying a report. We agree that the manufacturer can verify any information in the report of harm transmitted to them. We have revised the rule to ensure consistency with the statute. For the same reason, however, we are not revising the rule to allow manufacturers to use the information it receives from the consumer for purposes unrelated to verifying the report (such as offering a remedy to the consumer). However, we believe that section 6A(b)(6) of the CPSA and the final rule do not prohibit a consumer from asking the manufacturer to provide a remedy.

Further, Section 6A(d) of the CPSA requires the Commission to report to Congress annually on the Database. The report must include information on the Database's operation, content, maintenance, functionality, and cost. Therefore, we intend, as part of our review of the Database's operation and functionality, to determine if a manufacturer or private labeler has treated contact information transmitted to them according to the verification parameters outlined in section 6A(b)(6) of the CPSA. Section 6A(b)(6) of the CPSA expressly states, in part, that "Consumer information provided to a manufacturer or private labeler * * * may not be used or disseminated to any other party for any purpose other than verifying a report" submitted under section 6A(b)(1)(A) of the CPSA.

c. Proposed § 1102.20(c)—Timing

Proposed § 1102.20(c) would explain the timing of the transmission of reports of harm to the manufacturer. The proposal would identify circumstances where transmission of a report of harm to the manufacturer within five business days may be impracticable. The circumstances would include: Where the identified manufacturer or private labeler is out of business with no identifiable successor; the submitter misidentified the manufacturer or private labeler; the report of harm contained inaccurate or insufficient information for identification of a manufacturer or private labeler; or when the Commission cannot locate valid contact information for a manufacturer or private labeler.

We received no comments on this provision. We have finalized this section with modification, adding a sentence to reiterate that if the Commission cannot determine the identity of the manufacturer or private labeler of a product from the report of harm, or otherwise, the report of harm will not be included in the Database. We have also made typographical changes and a grammatical correction to remove the additional "or" at the end of § 1102.20(c)(2).

d. Proposed § 1102.20(d)—Method of Transmission

Proposed § 1102.20(d) would describe a method for transmission of reports of harm to a manufacturer or private labeler based on registration by the manufacturer or private labeler in the online Business Portal. The proposal would explain that if a manufacturer or private labeler has not registered for electronic transmission, we will send reports of harm through the United States mail to its principal place of business, unless the Commission selects another equally effective method of transmission.

One comment was received related to this section, which has been finalized without substantive modification. On our own initiative, we have corrected an erroneous cross reference in this provision by changing (e) to (f), and finalized this section with that typographical change.

Comment 67—One commenter states that the final rule should allow for input and comments from licensors so that timely and accurate notification can be made to the correct product manufacturer or product labeler. The commenter explains that the proposed rule does not account for the fact that many consumer products on the market are licensed products that are manufactured by entities other than the brand owner. A licensor owns intellectual property, such as characters and logos, which it licenses for use on consumer products. The commenter states that most consumers will misidentify a licensor as a manufacturer or private labeler, noting that the brand owner is not necessarily the product manufacturer. The commenter asserts that false information will be published in the 10 day time frame when licensors are incorrectly identified and no comment regarding misidentification is made in a timely fashion.

Response—We disagree regarding the transmission of reports of harm to licensors who do not fall within the definition of a "manufacturer" or "private labeler" as set forth in the CPSA. Section 6A(c)(1) of the CPSA requires the Commission to transmit reports of harm that meet the minimum requirements for publication to "the manufacturer or private labeler identified in the report." Under section 3(a)(11) of the CPSA, a "manufacturer" is defined as "any person who manufactures or imports a consumer product." Section 3(a)(12)(A) of the CPSA defines a "private labeler" as "an owner of a brand or trademark on the label of a consumer product which bears a private label." The CPSA further clarifies that "[a] consumer product bears a private label if (i) the product (or its container) is labeled with the brand or trademark of a person other than a manufacturer of the product, (ii) the person with whose brand or trademark the product (or container) is labeled has authorized or caused the product to be so labeled, and (iii) the brand or trademark of a manufacturer of such product does not appear on such label." Thus, a licensor who meets the definition of a manufacturer or private labeler may register with the Commission to receive notice of reports of harm. If a licensor is named by the submitter of a report of harm, and the named entity appears to be a manufacturer or private labeler, it will receive notice of a report of harm.

With regard to the "wrong" firm receiving notice of a report of harm, firms are free to make their own agreements regarding when they must inform certain business partners of reports of harm. We also encourage firms receiving notice of a report of harm that incorrectly identifies them as the responsible manufacturer or private labeler of a product to immediately inform the Commission so that we can stop the 10 day clock for publication of the report in the Database, if appropriate. Timing is critical here because if the recipient of the report of harm is not the manufacturer or private labeler, the Commission can decide not to post the report either because it is materially inaccurate or because it has determined that the report of harm is missing one of the minimum requirements for publication. Given our experience with the incident reporting system, we recognize that consumers may misidentify the product manufacturer or private labeler, and such claims of material inaccuracy generally are resolved quickly and easily if the receiving firm provides sufficient information. Firms have an incentive to immediately report errors to prevent reports of harm from being published in the Database that misidentify them as the manufacturer or private labeler.

e. Proposed § 1102.20(e)—Size Limits of Manufacturer Comments

Proposed § 1102.20(e) would state that we may, in our discretion, limit the data size of comments, including attachments, where such comments and attachments may negatively impact the technological or operational performance of the system.

No comments were received on this section, which has been finalized without modification.

f. Proposed § 1102.20(f)—Manufacturer Registrations

Proposed § 1102.20(f) would describe the process of manufacturer registration in the Business Portal and would require a manufacturer or private labeler to provide updated contact information.

Several comments were received on this section, resulting in no changes to the final rule.

Comment 68—One commenter states that we should adopt procedures to ensure and confirm that the correct manufacturer received the report of harm and actively promote registration by manufacturers. The commenter also suggests developing and adopting procedures informing unintended recipients to notify the CPSC immediately to stop the clock so that the report of harm does not get posted without a chance for the correct manufacturer to comment. The commenter notes that we should develop a procedure to verify that a manufacturer is notified and that transmitted incident reports are actually received by the manufacturer verification in the Business Portal.

Response—A manufacturer or private labeler that registers a user account with us will receive an email transmission of batched reports of harm to its registered users and will have user privileges to the Web based Business Portal where further details of the reports of harm will be accessible. Manufacturer or private labeler users will be enabled through the Business Portal to notify us if the product is not their own. Manufacturers or private labelers should notify us immediately so that we may determine disposition of the report of harm. Additionally, the manufacturer or private labeler may invoke the provisions governing materially inaccurate information as described in § 1102.26. We cannot identify any procedure that would ensure that the correct manufacturer or private labeler received notice of a report of harm when we use an electronic transmission of such report. Support of email received or read notification depends on the email client [1] used by the manufacturer or private labeler. Many popular email clients do not support this feature. There are security and permission considerations even for email clients that do support this feature. Therefore, it is currently not feasible to develop a meaningful validation procedure for manufacturer or private labeler receipt verification for electronically

[1] An e-mail client is software used to manage a user's e-mail.

transmitted notifications of a report of harm.

Comment 69—One commenter asks whether a foreign corporation can register in the Business Portal or whether registration would be limited to domestic entities only.

Response—We encourage registration by foreign manufacturers and private labelers of consumer products. The statute does not contain any restrictions related to the incorporation status of a manufacturer or private labeler. Registration by foreign manufacturers and private labelers will facilitate communication of potentially important product safety information to the entity with the most knowledge about the product identified in a particular report of harm. The transmission of reports of harm to foreign manufacturers and private labelers, combined with the resulting opportunity to comment, including the opportunity to make a claim of inaccurate information in a report of harm, will also contribute to the accuracy of the information in the Database.

g. Proposed § 1102.20(g)—Manufacturer Comments Received After One Year

Proposed § 1102.20(g) would address manufacturer comments received after one year, and would explain that a manufacturer or private labeler may comment on information received about a report of harm. The proposal would allow the Commission not to publish a manufacturer's comment that is received more than one year after transmission of the report of harm to the manufacturer or private labeler where it would not be in the public interest to do so.

We received one comment on this section, resulting in a change to the final rule deleting the phrase "received after one year" from the section heading and deleting the words "if such comment is received more than one year after transmission of the report of harm to the manufacturer or private labeler."

Comment 70—One commenter states that comments should be posted to the Database regardless of when we receive them. The commenter states that the proposed rule contains no explanation or justification for a one year time limit on comment submissions, and argues that the statute requires publication, without such a time limitation. The commenter adds that many reasons for a delay exist, including, for example, where an incident is reported and the submitter files a lawsuit much later, but within a two year statute of limitations. During such litigation, a manufacturer will gain many facts during the discovery period relating to the underlying incident report. The commenter states that there should be no limitation for submission of such information. Also, allowing rejection of comments after one year under an amorphous "public interest" standard will lead to arbitrary decisions and be contrary to the statute, the commenter asserts.

Response—While there was no intention to create the appearance of a per se one year limitation on the submission of manufacturer and private labeler comments in the proposed rule, we recognize that many people may have reasonably interpreted the proposed rule this way. Further, we agree with the commenter that manufacturer comments relating to a report of harm can provide helpful information to consumers, no matter when they are received and published. Accordingly, we have removed any language that suggests the Commission would not post manufacturer comments based upon the submission date of the comment. Nevertheless, the Commission strongly encourages manufacturers and private labelers to submit timely comments. The Commission reserves the right to determine whether it is in the public interest to publish a manufacturer comment. For example, it may not be in the public interest for the Commission to publish comments that, in the unlikely event, contain language reasonably described as lewd, lascivious, or obscene. We added language to this effect in the final rule.

2. Proposed § 1102.24—Designation of Confidential Information

Proposed § 1102.24 would address "confidential information" and would set forth criteria that must be followed to assert a claim of confidentiality. The proposed rule would define when claims should be submitted, the affirmative statements required to assist the Commission in an evaluation of the merits of the request, and the procedure we will follow for determining whether the information claimed is or is not confidential.

a. Proposed § 1102.24(a)—"Confidential Information" Defined

Proposed § 1102.24(a) would interpret "confidential information" in a manner similar to its meaning in section 6(a) of the CPSA to be information that contains or relates to a trade secret or other matter referred to in 18 U.S.C. 1905, or that is subject to 5 U.S.C. 552(b)(4).

We received one comment on this section, which we have finalized without change.

Comment 71—One commenter cautions about manufacturers and others being overbroad with claims of confidentiality in order to avoid public sharing of safety hazards.

Response—We must redact those portions of a report of harm that contain confidential information as described under section 6A(c) of the CPSA and § 1102.24. Most information submitted in a report of harm is not likely to contain confidential information because the submitter is likely to be someone who is not in a confidential relationship with the manufacturer or private labeler, or otherwise in a position to obtain confidential information. Therefore, broad claims of confidentiality are unlikely. However, for those claims on those portions of information that are confidential, we will follow section 6A(c)(2)(C) of the CPSA, redact the portion of the report that is confidential, notify the manufacturer, and follow the statutory and regulatory requirements for publication of the remainder of the report. If a claim does not meet the standard for confidential information, we will notify the claimant of the determination that the information is not confidential, and follow the procedures for publication in the Database. Finally, any manufacturer that makes a claim of confidentiality must be willing to assist in the defense of such claim and this should also inhibit overuse of confidentiality claims not made in good faith.

b. Proposed § 1102.24(b)—Designation of Confidential Information

Proposed § 1102.24(b) would state that a manufacturer may designate portions of information contained in a report of harm as confidential and would describe, at paragraphs (b)(1) through (b)(6), the statements required to support the claim of confidential information.

We received one comment on this provision, which resulted in a change to the final rule. In addition, we have made typographical changes.

Comment 72A—One commenter noted that because the contact information of a submitter of a report of harm is not required to be disclosed to the manufacturer/private labeler, it may be impossible for the manufacturer/private labeler to meet the requirement of § 1102.24(b)(4) that requires, as part of the designation of confidential information, the manufacturer to identify its relationship to the victim and/or submitter of the report of harm.

Response—We agree with the commenter and have accordingly changed this provision to state that this

information is required to the extent it is known to the manufacturer/private labeler.

c. Proposed § 1102.24(c)—Manner of Submission

Proposed § 1102.24(c) would describe the manner of submission where confidentiality is asserted for a designated portion of a report of harm. The proposal would allow submission of confidentiality assertions in the same manner as manufacturer comments described in § 1102.12(b) and would require such requests to be conspicuously marked.

We received no comments on this provision, and have finalized it without change.

d. Proposed § 1102.24(d)—Timing

Proposed § 1102.24(d) would explain that a request for confidential treatment must be received in a timely manner. If the request was received in a timely manner, the Commission may, in its discretion, withhold the report of harm from publication in the Database until it makes a determination regarding confidential treatment.

We received several comments on this section and have clarified Commission policy regarding the treatment of a request for a designation of confidential information.

Comment 72B—Several commenters address the timing of a determination of a claim of confidential information in a report of harm. One commenter states that confidentiality claims should be permitted only up until the day the report is published in the Database. Another commenter states that reports identified as confidential should remain in the Database while we review such a claim. Another commenter states that we must make a determination of confidential information before posting because most reports will not contain confidential commercial data and, because of the support necessary to sustain a confidentiality claim, manufacturers are unlikely to abuse confidentiality claims. Another commenter suggests that we set a time limit to determine whether information is confidential. One commenter states that we should carefully manage confidential business information in the Database by providing additional guidance on the interaction between section 6 of the CPSA and confidentiality determinations; the commenter says we should consider options, such as coded identifiers and devices, to provide confidential business information. Other commenters state that protection of confidential information is paramount and is protected under section 6(a) of the CPSA. Some commenters add that release of confidential commercial information is a violation of 18 U.S.C. § 1905 and can cause serious competitive harm.

Response—The final rule, at § 1102.24(b), sets forth the process by which a manufacturer or private labeler identified in a report of harm and who receives a report of harm may: (1) Review the report for confidential information; and (2) ask that we designate portions of the report as confidential information. Section 1102.24(b) also describes the information that must accompany the submission of a claim of confidential information and, as stated in the preamble to the proposed rule (75 FR at 29160), the criteria are similar to the requirements for submission of confidential information under section 6(a) of the CPSA. Section 6A(c) of the CPSA requires the Commission to redact portions of reports of harm where such portions are claimed as confidential, if such information meets the criteria for confidential information under 18 U.S.C. 1905 or is subject to Exemption 4 under 5 U.S.C. 552(b)(4). This process is similar to the practice we currently follow for determination of confidential information under section 6(a) of the CPSA. The operational design of the Database Business Portal will allow manufacturers to provide designations of confidential information to be submitted over a secure portal, and will allow manufacturers to provide comments through a secure portal. Therefore, additional coded identifiers would not be necessary. The Commission anticipates that it will be able to resolve most, if not all, confidentiality determinations within 10 days of transmitting the report to the manufacturer or private labeler, so long as designations of confidentiality have been raised in a timely manner. Further, as discussed in response to comment 73 below, the Commission's experience suggests that it is exceedingly rare that a report of harm will contain confidential or trade secret information. If for whatever reason we are unable to make a confidentiality determination in the time frame specified in the statute, we will redact the alleged confidential information until such a determination is made. The rule specifies that the burden of proof concerning confidential information is on the manufacturer or private labeler. However, because we will, as a matter of policy, redact the alleged confidential information before publication, information that is claimed as confidential cannot be displayed, as one commenter suggested, during this time period when the Commission is assessing whether the information meets the standard for confidentiality.

Comment 73—Some commenters would have us withhold publication of manufacturer requests for confidential treatment until we have made a determination and set a time limit for resolution.

Response—If we receive a request for confidential treatment, we will review it and withhold the information if it meets the interpretation of confidential information. We will follow already established procedures for such a review, as well as rely on our long history in reviewing such information. We also will follow the procedure specified in section 6A(c)(1)(C) of the CPSA for treatment of information we deem not confidential, and for notifying the manufacturer or private labeler of that determination. Section 6A(c)(1)(C) directs us to notify the manufacturer and include the information in the Database. The manufacturer may seek action in U.S. District Court for removal of such information from the Database. With regard to designations of confidential information, we already have procedures for determining claims of confidentiality under section 6(a) of the CPSA, and thus, few, if any, manufacturers and private labelers have contested our determinations. Because we already have a process for the determination of confidential information and have substantial experience in making such determinations pursuant to section 6(a) of the CPSA, and because it is unlikely that reports of harm will contain confidential information, we have not added additional requirements related to designations of confidential information to the final rule. We expect that confidentiality claims that are timely submitted to the CPSC will be reviewed, and a determination will be made, before the report of harm is posted.

e. Proposed § 1102.24(e)—Assistance With Defense

Proposed § 1102.24(e) would explain that a request for confidentiality should be made only by those who intend, in good faith, and so certify in writing, to assist in the defense of confidentiality by the Commission in any later judicial proceeding that could be sought to compel disclosure.

We received no comments on this provision, and have finalized it without change.

f. Proposed § 1102.24(f)—Commission Determination of Confidentiality

Proposed § 1102.24(f) would describe the procedure for notifying the manufacturer or private labeler of a determination of a confidentiality designation. Proposed § 1102.24(f) would state that if a portion of a report is deemed confidential, the Commission will notify the manufacturer or private labeler, redact the information deemed confidential, and publish the report of harm as redacted in the Database.

One comment was received regarding this section. Typographical changes to the final rule were made.

Comment 74—One commenter states that records flagged as confidential should remain in the Database during the CPSC review period.

Response—Any request that we receive designating a portion of a report of harm as confidential will be reviewed in accordance with the relevant case law, and we will make a determination. If the comment is received in a timely manner and is substantiated, we will make the determination before the information is posted in the Database. As stated in response to Comment 72, in the unlikely event that we are unable to make a determination in the time frame specified, we will redact the alleged confidential information while we continue to make a determination.

g. Proposed § 1102.24(g)—Commission Determination of No Confidentiality

Proposed § 1102.24(g) would state that, if a portion of a report is not deemed confidential, the Commission will notify the manufacturer or private labeler of the Commission's determination and will publish the report of harm in the Database.

No comments were received on this section of the rule. We have finalized with typographical changes.

h. Proposed § 1102.24(h)—Removal of Confidential Information

Proposed § 1102.24(h) would explain that a manufacturer or private labeler may sue in the appropriate U.S. District Court to seek removal of alleged confidential information published in the Database.

No comments were received on this section of the proposed rule, and we have finalized it without change.

3. Proposed § 1102.26—Designation of Materially Inaccurate Information

Proposed § 1102.26 would contain the definitions and procedures for how claims of materially inaccurate information in reports of harm and manufacturer comments can be asserted and how we will evaluate such claims. We have changed the heading of this section to "Determination of Materially Inaccurate Information."

a. Proposed § 1102.26(a)—Definition of Materially Inaccurate Information

Proposed § 1102.26(a)(1) would define "materially inaccurate information in a report of harm" as information that is false or misleading in a significant and relevant way that creates or has the potential to create a substantially erroneous or substantially mistaken belief about information in a report of harm. We linked the "substantially erroneous or substantially mistaken" element to required information in the report of harm.

Several comments were received on the definition of materially inaccurate information. In response to the comments and to clarify our definition, we have revised the definition consistent with the Commission's original intent. In addition, on our own initiative, we have revised the list of fields that may contain materially inaccurate information in § 1102.26(a)(1) to include the required field, "Incident date." In addition, we have made typographical changes.

Proposed § 1102.26(a)(2) would define "materially inaccurate information in a manufacturer comment" as information that is false or misleading in a significant and relevant way that creates or has the potential to create a substantially erroneous or substantially mistaken belief about information in a manufacturer's comment. We linked the "substantially erroneous or substantially mistaken belief" element in a manufacturer comment to specific information set forth in § 1102.26(a)(2)(i) through (v), all of which relate to information about the product, any Commission investigation, the identification of a responsible party, and any corrective action or other action taken by the manufacturer or private labeler of the product.

Several comments were received on the definition of materially inaccurate information, resulting in some changes to the final rule as described below. In addition, we identified the description of the product as information upon which a claim of material inaccuracy could be made. We have also made typographical changes.

Comment 75—Some commenters support the proposed definition of materially inaccurate information and state that it appears to cover material information only and not superficial or nonsubstantive errors. In contrast, a commenter criticizes the definition of materially inaccurate information as setting too high a standard and states that we should adopt a standard of reasonableness instead. The commenter points to the standard in U.S. Securities and Exchange Commission ("SEC") cases on misrepresentation and claims that the SEC standard focuses on whether the misrepresentation misled a reasonable investor.

Response—A definition of materially inaccurate information was proposed to explain what we view to be material and indicate that we were setting a high bar as we did not want to waste resources disputing nonsubstantive errors in Database entries. *Black's Law Dictionary* defines "material" as "important" and a representation "relating to a matter which is so substantial and important as to influence a party to whom the representation is made" and "of such a nature that knowledge of the item would affect a person's decision making in a significant way." In response to this comment, we are revising the definitions of materially inaccurate information in a report of harm and a manufacturer comment to read "information that is false or misleading, and which is so substantial and important as to affect a reasonable consumer's decision making about the product." This incorporates the concepts outlined in the proposed definition, follows the *Black's Law Dictionary* meaning of "material," and captures the commenter's concern about "reasonableness" by indicating that something is material if a reasonable consumer using the Database might be affected by the false or misleading information.

Comment 76—Several commenters object to the particular phrases used in the definition. Two commenters claim that "preconditions" in the proposed definition create the potential to cause confusion and inappropriate limitations on what can be claimed to be materially inaccurate from a report. These commenters allege that we just want to publish reports of harm and manufacturer comments side by side, and they argue that this is insufficient to avoid reputational harm. The commenters state that manufacturers have a right not to have inaccurate information in a government-sanctioned Database. The commenters say that preconditions create an inappropriate limitation on what can be claimed to be materially inaccurate from a report of harm.

Response—We agree that the Database should strive for accuracy. However, we note that Congress also required a disclaimer to be placed on the Database, understanding that we would receive information that would present challenges in terms of content and/or

descriptions of products. The proposed definition of materially inaccurate information was designed not only to ensure that information that is inaccurate and material could be claimed and not published, but also to ensure that information that was inaccurate, but not material (such as a non substantive mistake in a report of harm), still would be subject to manufacturer comment and later publication in the Database. For example, if a report of harm contains a misspelling of the product brand name, we would not consider this error as materially inaccurate. If, however, it is claimed that the report of harm misidentifies the product or the manufacturer, we would consider such errors to be possible evidence of material inaccuracy. We are cognizant of the issues concerning harm to reputation and will review claims of material inaccuracy with such concerns in mind.

Comment 77—One commenter would have the definition relate to the key elements required in the report of harm, and states that the definition was correct to the extent that it would define information as materially inaccurate if it is false or misleading in a significant and relevant way. The commenter would simplify the definition to "information that is false or misleading in a significant and relevant way." Other commenters claim that the definition contains redundant words. The commenters state that the phrase "create or have the potential to create a substantially erroneous or substantially mistaken belief in a Database user" is redundant as compared to "false or misleading in a significant and relevant way." The commenters would remove the allegedly redundant text, and claim it adds no value, and potentially creates room for argument and subjective interpretation of what a Database user may or may not think, especially where the CPSC is intent on limiting the scope of comments on reports of harm.

Response—We adopted the referenced descriptive words and phrases in the definition to give context to evaluating the information and to provide additional guidance to submitters of reports of harm, manufacturers, and Database users as to what we mean by "materially inaccurate." We view the referenced words as descriptive and not redundant. They emphasize that the bar for determining materially inaccurate information is a high one. One aspect of the definition focuses on the information stating that it must be false or misleading. The other aspect of the definition focuses on the Database user indicating the allegedly inaccurate information must have a potential to create a substantially erroneous or substantially mistaken belief in the Database user. We are revising the definition in response to comments but will still focus on these two aspects of materiality which we do not believe to be redundant.

Comment 78—One commenter objects to the word "substantially" in the definition as an additional, unreasonably restrictive criterion with no basis in the statute. The commenter states that the rule fails to define the word and inappropriately narrows the types of false or misleading information that would be considered materially inaccurate. The commenter states that the word "substantially" also creates an extra step that the CPSC must interpret, which will be inherently subjective and will lead to arbitrary decisions about whether to remove or correct information that is concededly false or misleading. The commenter also states that the rule contains no criteria or procedures that spell out how the Commission staff will make such determinations. The commenter states that if the CPSC leaves the word "substantially" in the rule, we should spell out how the evaluation will be made and what qualifications CPSC staff must possess to be assigned to make such determinations.

Response—Our prior use of the word "substantially" in the definition of materially inaccurate information was consistent with the statute's requirement of materiality. "Substantial" goes to the element of materiality in a Database user's belief. *Black's Law Dictionary* defines "material" as "important" and a representation "relating to a matter which is so substantial and important as to influence a party to whom the representation is made" and "of such a nature that knowledge of the item would affect a person's decision making in a 'significant' way." However, our revision of the definition addresses the commenter's concern. For example, if we receive a report with a date of incident identified, and then we receive a manufacturer comment that the product was not manufactured at the time of the date of incident, we believe that such a report, if properly substantiated, would meet the definition of materially inaccurate. With regard to staff qualifications to make such determinations, we have made assessments regarding information contained in incident reports since the inception of the agency.

Comment 79—One commenter objects to the word "liability" in determining whether a manufacturer's comment is materially inaccurate. Proposed § 1102.26(a)(2)(i) would include "liability" as information that could be inaccurate in a manufacturer comment. The commenter points out that if the information were submitted under section 15 of the CPSA and § 1115.12(a), a company may deny that the information it submits reasonably supports the conclusion that its product contains a defect that could create a substantial product hazard. The commenter states that manufacturers may wish to make a similar statement in response to a report of harm to be included in the Database indicating that the report does not reasonably support the conclusion that the product contains a defect. The commenter states that proposed § 1102.26(a)(2)(i) could be construed as a statement of liability, and thus might expose the manufacturer's comment to challenge by the submitter or some other interested party as being materially inaccurate because the product is defective. The commenter states that such a scenario would set up a "mini-litigation" in which the CPSC essentially is being asked to make a defect determination regarding the product, under the guise of making a determination regarding material inaccuracy, as opposed to appropriately conducting a preliminary investigation of the potential product hazard. The commenter contends that the Database is not the appropriate venue for the Commission to make a defect determination, and the collateral effect would be to complicate material inaccuracy determinations regarding manufacturer comments.

Response—The Commission agrees that we do not want to set up a "mini-litigation" regarding causation when we are determining claims of material inaccuracy. For this reason, we have revised the rule to delete reference to the nature, scope or cause of the harm and liability. Instead, we have indicated that manufacturers can claim material inaccuracy regarding the harm or risk of harm identified in the report.

b. Proposed § 1102.26(b)—Request for Designation of Materially Inaccurate Information

Proposed § 1102.26(b) would establish the procedure for designating materially inaccurate information. In the preamble to the proposed rule (75 FR at 29161), we asked whether this section should include a burden of proof requirement for materially inaccurate information and, if so, what would be the meaning of the term, and what standard would be imposed under it.

One comment was received, resulting in the addition of a burden of proof

requirement for claims of material inaccuracy, as set forth in response to Comment 80 below. We have made a clarification in the heading which now reads "(b) Request for determination of materially inaccurate information."

Comment 80—One commenter states that we should impose a burden of proof requirement in § 1102.26(b), the same way we defined it for making a determination and supporting a claim of confidential information in § 1102.24(b). A requester seeking a designation of materially inaccurate information should bear the burden of proof on defining the information that is materially inaccurate and supporting the claim.

Response—We agree that we should impose a burden of proof requirement for materially inaccurate information, similar to how we request designation and support for confidential information claims. Therefore, we have revised § 1102.26(b) to state that a requester seeking removal or correction of alleged materially inaccurate information, before or after posting in the Database, bears the burden of proving that such information meets our definition of materially inaccurate information and that such requester bears the burden of supporting the claim of materially inaccurate information with documentation or other information showing that the information meets the requirement.

c. Proposed § 1102.26(c)—Manner of Submission—Length of Request and Expedited Review

Proposed § 1102.26(c) would explain the manner of submission for manufacturers and private labelers and all other requesters. The proposal also would address the length of the request and would allow for expedited review of requests that are no more than five pages in length, including attachments. This provision also would state that, regardless of the length, all submissions would be reviewed.

We received several comments on this section, which resulted in no changes to the final rule.

Comment 81—One commenter suggests that the expedited review proposal is inherently flawed and that we should rethink this proposal. Sections 1102.26(c) and 1102.26(i)(2) of the proposed rule provide manufacturers and private labelers with a short, 10-business-day time frame to allege a material inaccuracy, meet the burden of proof, and comply with the lengthy evidentiary requirement. Companies must decide whether to provide: (a) Sufficient evidence, which may be greater than five pages, and risk that the inaccurate report of harm be posted before review by the Commission staff, or (b) a shortened version of the evidence, which meets the five pages or less requirement, and then have the report of harm reviewed and posted to the Database because of insufficient evidence of material inaccuracy.

Response—The provision for expedited review is based on the statutory time frames in section 6A(c)(3) of the CPSA, where we must publish the reports of harm not later than the tenth business day after transmission of such report to the manufacturer or private labeler. A determination of material inaccuracy is tied to the substance of the claim and should be capable of expression in five pages. Our experience in reviewing comments submitted under section 6(b) of the CPSA is that manufacturers often repeat comments and arguments; this repetition adds to the length, but not necessarily to the substance, of an argument. We emphasize that we will accept any length of submission, but that it may be more difficult to make the required determinations in the time allotted if the length and content are voluminous. The expedited review procedure is designed to give manufacturers a process for responding quickly and in a way that will allow us to evaluate their claims more quickly. Therefore, we are not revising this provision.

Comment 82—One commenter states that we should provide for an expedited claim review within the 10 day period before publication of the report of harm in the Database. Another commenter states that an expedited review gives the CPSC no deadlines to complete such a review, and that such a completion time should be provided. The commenters state that the expedited review provision does not ensure that claims of material inaccuracy will be resolved before the report is published in the Database. Another commenter states that a five page limit for expedited review is unreasonably restrictive adding that we did not provide any time period for investigating or resolving a claim. Another commenter would revise the rule so that, where a manufacturer limits a claim to 10 pages, including attachments, and submits the request within five days of receiving the report of harm, the CPSC would render a decision within five days, before the report of harm is posted in the Database. Another commenter urges us to implement specific procedures for handling expedited claims of material inaccuracy to resolve them within one to three business days before publication, and says we should prioritize resolution of these claims quickly and fairly.

Response—We will try to decide claims of material inaccuracy as expeditiously as possible, but it would be impractical to revise the rule to impose specific time frames on our decision making process. The number of claims of material inaccuracy and the possibility of other priorities that demand our attention may affect the timing of our decisions. We will use our best efforts to review submissions and make determinations within the 10-business-day time frame, when submissions are received timely. But if no determination is made by the tenth business day, we must post the report of harm in the Database pursuant to section 6A(c)(3)(A) of the CPSA. Once a report of harm has been posted in the Database, we will follow the procedures set forth in section 6A(c)(4)(B) of the CPSA, and § 1102.26(h), for removing any material inaccuracies after such a determination is made.

Comment 83—One commenter states that proposed § 1102.26(c)(3) would allow any person to challenge a comment as materially inaccurate, including many persons who have no relationship to the alleged incident, such as class action attorneys, competitors, and others who might have an inappropriate motive to claim materially inaccurate information. The commenter states that the Commission would be creating a "free for all" atmosphere by encouraging such people to collaterally battle about issues using the CPSC's Database. The commenter states that the proposal would have the CPSC serve as referee. The commenter states that the value of inviting such comments is extraordinarily low; therefore, the commenter would have us delete the provision.

Response—Nothing in the statutory text allows us to limit who may submit a claim of material inaccuracy. Accordingly, we will consider any claim of material inaccuracy as long as it meets the minimum requirements for submission of a claim and is appropriately supported.

d. Proposed § 1102.26(d)—Timing of Submission

Proposed § 1102.26(d) would address the timing of a request for a determination of materially inaccurate information and state that, if a request was received prior to publication, we may withhold the report of harm from publication in the Database until we make a determination. Absent such a determination, the report of harm would publish on the tenth business day after

we transmitted the report to the manufacturer or private labeler.

We received several comments regarding this section, which resulted in a clarification of the final rule. The section previously stated that the Commission "may withhold a report of harm from publication in the Database until it makes a determination" and will now read that the Commission "cannot withhold a report of harm from publication in the Database until it makes a determination." The word "generally" has also been deleted from the next line.

Comment 84—Several commenters note that we did not impose any time frame by which our determinations had to be made, and that the statute gives us seven days to post the determination in the Database after we have concluded our investigation. Some commenters state that, without a time frame reference, the determination could take forever, so we should either set a deadline for determination, or delay the posting of reports of harm that are challenged until a determination is made. The commenters also note that the need for an expedited determination would be removed if we make a determination before posting, or adopt a time limit. Other commenters assert that we should clarify both the requirement for challenging a report as false or inaccurate within the response window and the process for filing such challenges if relevant information becomes available beyond the response time. Another commenter says that any report undergoing a material inaccuracy review after publication should be identified or marked in the Database so that users will be aware that the report is undergoing such a review. Other commenters suggest that we identify and suspend from the 10-day publication requirement, any information in a report of harm identified as materially inaccurate, pending investigation by our staff, until we have completed the investigation or made necessary corrections.

Response—Section 6A of the CPSA allows us to review information alleged to be materially inaccurate, both before the information is published in the Database and after it is published. Requests from commenters that we suspend the 10-day publication requirement and not publish any information in a report of harm claimed to be materially inaccurate until we have completed an investigation caused us to re-examine the requirements of the statute. The plain language of section 6A(c)(4)(A) states that if the determination that information is materially inaccurate has been made prior to posting, then the Commission must remove, correct, or add information to correct the materially inaccurate information. Further, read together, sections 6A(c)(3)(A) and 6A(c)(4)(A) of the CPSA require that we must publish reports of harm or manufacturer comments in the first instance, not later than the tenth business day after transmission to the manufacturer unless we have "determined" that the information is materially inaccurate. The rule has been revised to ensure consistency with the statute.

Moreover, section 6A(f) of the CPSA states that reports of harm included in the Database are not subject to section 6(b) of the CPSA. Allowing delay of the posting of reports of harm beyond the tenth business day while the Commission considers a claim of material inaccuracy would be tantamount to reinstating section 6(b) of the CPSA with regard to that report of harm. Such a result would be inconsistent with the statute as Congress intentionally excluded reports of harm from section 6(b). Additionally, two provisions in section 6A contemplate that the Database may contain materially inaccurate information. Section 6A(b)(5) of the CPSA requires a disclaimer regarding the accuracy of the data. Section 6A(c)(4)(B) of the CPSA provides a mechanism for removal of information determined to be materially inaccurate by the Commission. As evidenced by the statute, Congress balanced the accuracy of the information in the Database with the public's need for more immediate access to public safety related data. The better reading of Congressional intent is not to upset this balance.

Our timeline for any investigation of whether information is materially inaccurate once it has been published will depend on an evaluation of the information claimed to be materially inaccurate. We are not adopting an arbitrary time frame based on estimates of yet unknown information. The Commission will endeavor to act on such requests in a timely manner.

We also are not adopting the suggestion to delay posting of the information, especially if no determination can be made from the information submitted about a claimed material inaccuracy, because section 6A(c)(4) of the CPSA does not give us that option. The final rule builds in a process within the confines of the statute to address the timing concerns expressed by stakeholders. The rule creates an electronic process for notification of manufacturers and private labelers of reports of harm, thereby expediting transmission of the reports for comment. Recognizing the 10-day time frame built into the statute, by this rule, the Commission has created a fast track review system expediting review of claims of material inaccuracies to ensure that manufacturers' concerns are addressed in a timely fashion. While we can address manufacturers' comments operationally by building systems such as these to ensure a timely comment and response process, we cannot ignore the timelines built into the statute. Nor would we want to do so as the purpose of the Database is to provide critical safety information to consumers who up until now have not had access to incident data in a timely manner. If information has not been determined to be materially inaccurate, it must be published in the Database. Finally, the statute does not require us to designate that any such report is under investigation for material inaccuracy, and we decline to add such information to the Database.

Comment 85—One commenter states that when a *prima facie* case of inaccuracy is made, we should exercise our discretion not to publish the report of harm pending confirmation of the veracity of the claim.

Response—Section 6A(c)(4) of the CPSA requires that if we determine information in a report of harm or a comment is materially inaccurate prior to posting the information in the Database, we must take one of three specific options to address the material inaccuracy. Section 6A(c)(3) of the CPSA requires that we publish reports of harm (that otherwise meet the requirements for publication) not later than the tenth business day after the date we transmit it to the manufacturer. Moreover, section 6A(c)(3) also requires publication of manufacturer comments upon request. Unless we have determined that the information in the report of harm or the comment is materially inaccurate, we must publish the report or comment in the Database. The language "except as provided in paragraph 4(A)," allows us to withhold from publication any information in a report of harm or a manufacturer comment where we can make that determination before posting based on the claim submitted. However, absent such a determination, we must publish a report of harm or manufacturer comment. We do not have authority, beyond what is specified in the referenced statutory provision, to withhold from publication a report of harm or manufacturer comment absent a determination of material inaccuracy. We must be provided with legitimate

and substantiated information supporting such claims and have built an expedited review system to respond, within the confines of the statute, to our stakeholders' timing concerns. We will not withhold from publication any report of harm or manufacturer comment where such claim is unsupported.

e. Proposed § 1102.26(e)—Assistance With Defense

Proposed § 1102.26(e) would explain that a manufacturer or private labeler's request for a determination of material inaccuracy should be made only by those who intend in good faith to assist in the defense of the correction of a material inaccuracy by the Commission in any later judicial proceeding that could be sought to compel disclosure. This provision is similar to one found in the Commission's FOIA regulations concerning the assertion of confidentiality. The Commission believes that this provision requires those seeking a determination that information in a report of harm or manufacturer comment is materially inaccurate to stand behind their assertion where the Commission is being sued to compel disclosure of such information.

We received no comments on this provision, and have finalized it without change.

f. Proposed § 1102.26(f)—Notice

Proposed § 1102.26(f) would state that we will notify the person or firm requesting a determination regarding materially inaccurate information and the method of resolution after resolving such a request.

We received one comment related to this section of the proposed rule, but have finalized it without modification.

Comment 86—One commenter states that the proposed rule may be fatally flawed for not providing adequate procedural due process for manufacturers and private labelers regarding determinations of confidential and materially inaccurate information. For example, the rule does not specify: Who will make initial determinations about confidential information and materially inaccurate information; whether there will be an appeal procedure to challenge initial determinations, or whether manufacturers and private labelers must challenge determinations in a U.S. District Court; whether an appeal is provided, who will make decisions on appeal; and whether there will be a chance to submit evidence, or make oral argument for the record.

Response—We have not revised the rule to add process mechanisms for the determination of confidential and materially inaccurate information. We address the confidentiality requirements under that provision.

First, Congress established a statutory scheme that favors disclosure of reports of harm over a lengthy review process for manufacturers, such as what currently exists for FOIA requests and the requirements of section 6(b) of the CPSA. One purpose of the Database is to eliminate that lengthy process, and to provide timely consumer access to product safety information. Moreover, the statute specifically states that section 6(b) of the CPSA does not apply to the publication of reports of harm in the Database. The statute also does not require us to provide a formal hearing for those contesting our decision with regard to confidential and materially inaccurate information, and we decline to use resources in this manner.

Second, with regard to claims of material inaccuracy, manufacturers and private labelers will have an opportunity to review a report of harm before publication, to comment on the report, and to claim that a report contains a material inaccuracy. We will take claims of material inaccuracy seriously, and give proper consideration to each claim. If a claim of inaccuracy is denied based on the information provided, manufacturers and private labelers may submit new or additional information to establish the claimed inaccuracy at any time.

Finally, with regard to due process, the Commission believes strongly in maintaining adequate due process protections. Due process is a flexible concept, depending on the circumstances, and essentially requires notice and an opportunity to be heard, both of which are sufficiently present in the final rule. *Mathews* v. *Eldridge,* 424 U.S. 319, 333 (1976); *Silvernail* v. *County of Kent,* 385 F.3d 601, 604 (6th Cir. 2004) ("The essential elements of due process are notice and an opportunity to be heard."); *United States* v. *Shelton Wholesale, Inc.,* 34 F.Supp.2d 1147, 1151–53 (W.D. Mo. 1999) (holding that informal consultations with personnel empowered to correct a mistake constitutes a due process hearing in appropriate circumstances). Thus, at this time, we do not think that it is necessary to establish additional process or appeal procedures in the final rule without a statutory obligation to do so.

g. Proposed § 1102.26(g)—Commission Determination of Material Inaccuracy Before Publication

Proposed § 1102.26(g) would outline the steps we would take if we determined that information in a report of harm or manufacturer comment is materially inaccurate before it is published in the Database. Under the proposal, we would: (1) Decline to add the report of harm or manufacturer comment to the Database; (2) correct the materially inaccurate information, and if the minimum requirements for publication, as set forth in 1102.10 and 1102.12(c) are met, publish the corrected report of harm or manufacturer comment in the Database; or (3) add information to the report of harm or the manufacturer comment to correct the materially inaccurate information, and if the minimum requirements for publication, as set forth in 1102.10 and 1102.12(c) are met, publish the updated report of harm or manufacturer comment in the Database.

We received one comment on this section, with no resulting changes to the rule. However, on our own initiative, we have corrected two internal citation errors, changing the cite contained in § 1102.26(g)(2) and (g)(3) from § 1102.10(c) to § 1102.10(d). We also have reiterated that the Commission may make determinations of material inaccuracy without the necessity of a request from an outside party and have changed the word "may" to "shall" prior to (1) to be consistent with the statutory language. In addition, in 1102.26(g)(1) we have changed the language to ensure consistency with the statute. We also made typographical changes.

Comment 87—One commenter states that if we will not withhold reports with pending material inaccuracy claims until resolution, we should make a determination that if a claim has merit, but needs more investigation, we should give an additional 10 business days to resolve the claim before publishing.

Response—A determination that a claim has merit is not a determination of materially inaccurate information. Section 6A(c)(4) of the CPSA requires a determination of whether there is materially inaccurate information to resolve the claim. We do not believe that section 6A(c)(4) of the CPSA allows us to extend the time without making such a determination of material inaccuracy before publishing in the Database. If we determine that the information is not materially inaccurate, it will be posted in the Database.

h. Proposed § 1102.26(h)—Commission Determination of Material Inaccuracy After Publication

Proposed § 1102.26(h) would address a Commission determination where information in a report of harm or comment has been published and would explain that the Commission may, after an investigation, determine that information in a report of harm or manufacturer comment is materially inaccurate. The proposal would state that the Commission shall, no later than seven business days after such determination: (1) Remove the report of harm or manufacturer comment, including any attachments, from the Database; (2) correct the materially inaccurate information, and if other minimum requirements for publication are met, maintain the corrected comment or report of harm in the Database; or (3) add information to the report of harm or comment to correct the materially inaccurate information, and if the minimum requirements for publication are met, we would maintain the updated comment or report of harm in the Database.

We received several comments on this section of the rule, which has been finalized without substantive modification. However, on our own initiative, we have corrected two internal citations in § 1102.26(h)(2) and (h)(3) from § 1102.10(c) to § 1102.10(d). In addition, in 1102.26(h)(1) we have changed the language to ensure consistency with the statute. We have also made typographical changes.

Comment 88—One commenter asserts that the process for subsequent correction or cure of materially inaccurate information will not serve to cure the material misinformation that could happen where such information is published and later downloaded. The commenter states that the issue must be resolved first, if submitted timely by the manufacturer or private labeler, to prevent the Database from being filled with inaccurate information. The commenter further states that the harm resulting from posting inaccurate information far outweighs any delay in posting for investigation, and that rectification after publication may be too late to prevent significant brand damage. Other commenters state that the rule should clarify our discretion to delay posting, and further should provide that, where a manufacturer has demonstrated a good faith process for timely investigating reports of harm, we should exercise this discretion to delay publication of such reports until claims of material inaccuracy are resolved.

Response—Under section 6A(c)(3)(A) of the CPSA, we do not have the discretion to delay posting reports of harm in the Database past the tenth business day. We will use our best efforts to resolve claims of material inaccuracy before publication when timely submitted, but absent such determination, we will publish the report on the tenth business day. Congress provided in section 6A(c)(4) of the CPSA that we could review the claim of material inaccuracy after publication, by investigating, and then making such a determination. The ability to investigate a claim after publication is an acknowledgement that there may be instances where we need to review and investigate the publication of materially inaccurate information after publication. We encourage the submission of timely and specific comments that will be posted along with the report of harm. In this way, the manufacturer has the opportunity to address and refute any perceived issue relating to brand or reputation.

In addition, section 6A(b)(5) of the CPSA addresses the issue of the content of the information in the Database, by requiring us to provide a clear and conspicuous notice to users of the Database that we do not guarantee the accuracy, completeness, or adequacy of the contents of the Database. Section 1102.42 declares that this information will also appear on all documents that are printed from the user interface in the Database. Therefore, we cannot create procedures to delay publication of reports of harm and manufacturer comments beyond the parameters set forth in section 6A of the CPSA.

Comment 89—Some commenters express concern about potential reputational harm resulting from publicly viewable reports of harm, regardless of the manufacturer's ability to comment on the report. One commenter argues that as soon as a report of harm is made available for public download in the Database, the report takes on a "new, independent existence with no restriction to guarantee it will not reappear in some other forum," even if the report was later removed from the Database because it contained inaccurate information. Another commenter is concerned about the reputational harm caused to a licensor when the licensor is neither the manufacturer nor the private labeler and, therefore, does not have the opportunity to submit a comment prior to the publication of a (materially inaccurate) report of harm in the Database. The commenter's concern is that it would be difficult to "unring the bell" once materially inaccurate information in a report of harm is published in the Database, and this concern is compounded by the fact that the Database is operated by the Federal Government.

Response—Proposed § 1102.26(b) would allow any person or entity reviewing a report of harm or manufacturer comment, either before or after publication in the Database, to request that the report of harm or manufacturer comment, or portions of such report of harm or manufacturer comment, be excluded from the Database or corrected by the Commission, because it contains materially inaccurate information. Because the commenters appear to be concerned about inaccurate information in reports of harm, we also note that § 1102.26(a) would define materially inaccurate information in a report of harm, confining it to four categories of information: (1) Identification of a consumer product; (2) identification of a manufacturer or private labeler; (3) description of the harm or risk of harm related to the use of the consumer product; and (4) incident date. In many instances, a manufacturer or private labeler should be able to identify quickly whether inaccurate information in a report of harm exists with respect to any of these categories.

As an additional matter, we will provide expedited review of claims of materially inaccurate information in a report of harm, where the manufacturer or private labeler files such request within the page limits specified by proposed § 1102.26(c)(1). In such cases, we will attempt, where practicable, to expedite the determination of a claim of material inaccuracy before publication of the report of harm in the Database. Even if a report of harm is published in the Database, if we have determined that materially inaccurate information is contained in such report, we will make any necessary correction, exclusion, or addition in no more than seven business days having made such determination.

With regard to licensors that do not receive notification of a report of harm, as we stated earlier in response to Comment 67, firms are free to make their own agreements regarding when they must inform certain business partners of reports of harm.

Finally, we note the disclaimer that will appear on any documents that are printed from the Database, in addition to being posted on every page, including the entrance screen, of the Database. The statutorily-provided disclaimer states that the Commission does not guarantee the accuracy, completeness, or adequacy of the contents of the

Database, especially concerning the accuracy, completeness, or adequacy of information submitted by persons outside of the CPSC. The disclaimer, combined with the various measures for claiming inaccurate information in a report of harm, balances the statutory requirements for publication against the interest in preventing inaccurate information from being published in the Database.

i. Proposed § 1102.26(i)—Commission Discretion

Proposed § 1102.26(i)(1) would state that we would exercise our discretion, consistent with the statutory requirements, to remove, correct, or add information to correct materially inaccurate information contained in a report of harm or manufacturer comment, and that we favor correction and addition to correction, over exclusion of entire reports of harm or manufacturer comments.

We received several comments on this section, which has been finalized without substantive modification. On our own initiative, we have corrected an internal citation error in § 1102.26(i)(1) from § 1102.10(c) to § 1102.10(d) and for clarity have changed "addition to correction" to "the addition of information to correct."

Proposed § 1102.26(i)(2) would state that if we received a request for correction or exclusion of materially inaccurate information from a manufacturer within the recommended five-page limit, we would attempt to make an expedited determination of a claim of material inaccuracy. The proposal would explain that we generally would publish reports on the tenth business day after transmitting a report of harm, where either the recommended page limit of comments has been exceeded, or where we otherwise have been unable to make a determination of material inaccuracy prior to the statutorily mandated publication date. We would make any necessary correction, exclusion, or addition not later than seven business days after making a determination that there is materially inaccurate information in the report of harm. Manufacturer comments would be published at the same time as the report or harm or as soon thereafter as is practicable.

We received several comments on this section, which we have finalized with grammatical changes. In addition, we have deleted the words "generally," "either the recommended page limit of comments has been exceeded or where," and "otherwise." The sentence now reads "the Commission will publish reports of harm on the tenth business day after transmitting a report of harm where the Commission has been unable to make a determination regarding a claim of material inaccuracy prior to the statutorily mandated publication date." These changes are consistent with changes made to § 1102.26(d) and would reconcile these two sections. As stated earlier, it reflects our belief that, as required by the statute, unless the Commission has determined that the information in the report of harm or the comment is materially inaccurate, we must publish the report or comment in the Database on the tenth business day after transmitting a report of harm.

Comment 90—One commenter states that we should consider creating a more expedited process than what we have proposed to resolve issues as fully as possible before publication.

Response—The process we have set up for expedited review is designed to enable us to make the required statutory determination of material inaccuracy without getting overwhelmed by repetitive and duplicative claims. We believe that the process we have set up addresses this issue, and therefore, we are not revising the rule as suggested by the commenter.

Comment 91—One commenter states that with respect to notifications to the manufacturer about a claim in proposed § 1102.26(f) and (j) on material inaccuracies, we should include text of proposed redaction, correction, or addition to be made to the disputed report of harm. Otherwise, the commenter claims that we would be making arbitrary statements concerning the inaccuracy.

Response—As section 6A(c)(4) of the CPSA requires, we will notify the manufacturer where we have determined that information is materially inaccurate. This notification will include information on how we propose to address the material inaccuracy consistent with the statutory provisions. As noted in § 1102.26(i)(1), we will favor correction over removal where we determine that such correction can address the material inaccuracy.

Comment 92—One commenter states that unless necessary to permit publication in the Database, we should not rewrite the text of documents, but should simply redact disputed information to ensure that additional issues regarding accuracy do not arise.

Response—Section 6A(c)(4) of the CPSA gives removal as one option for addressing information determined as materially inaccurate in the Database. Correction of the materially inaccurate information is also a specified option to resolve a material inaccuracy claim. Section 6A(c)(4) of the CPSA also allows us to add information to correct the material inaccuracy. We will not adopt the suggestion to adopt redaction as our only option and reject the suggestion that we not correct such information where correction would address the material inaccuracy. While it is possible that such a correction might somehow create a new issue, we do not believe that it would create more inaccuracy issues. Manufacturers are free, however, to point out to us any issue about the correction after receiving notification of it. We do not intend the correction process to turn into a negotiation over the correction language, but we will provide notice to the manufacturer as stated in § 1102.26(f).

j. Proposed § 1102.26(j)—Commission Determination of No Material Inaccuracy

Proposed § 1102.26(j) would describe the process for what we would do if we determine that the requested information in a report of harm does not contain materially inaccurate information. The proposal would have us notify the requestor of our determination, and publish the report in the Database, if it meets the minimum requirements for publication.

Several comments were received regarding this section, but no changes to the final rule resulted from the comments. However, on our own initiative, we clarified in the final rule that the Commission determination of no material inaccuracy may be made to a manufacturer comment, in addition to a report of harm. We also made an internal citation correction in § 1102.26(j)(2) to correctly state where the minimum requirements for reports of harm and manufacturer comments may be found in the rule: In § 1102.10(d) and § 1102.12(c) and added the word "and" between (1) and (2) to be consistent with the statutory language.

Comment 93—One commenter addresses the resource issue surrounding the Database, and states that if section 6(b) of the CPSA is any guide, lack of staff could make determinations on material inaccuracy "indefinite." The commenter would have the final rule specify a 20-business-day deadline for resolution of a claim of material inaccuracy. If the Commission cannot resolve any claim of material inaccuracy within 20 days, the commenter would have the report removed from the Database until the claim is resolved. The commenter notes that such a procedure would promote

timely consideration, and provide an impetus for quick resolution.

Response—We are considering how best to allocate resources to address a possible increase in information submitted through the Database. We are committed to providing sufficient resources for a successful Database. We take seriously the obligation to review reports of harm and manufacturer comments for minimum content requirements, and for determination of claims of confidential or materially inaccurate information. However, because section 6A of the CPSA establishes clear deadlines for specific actions, we cannot amend the rule to allow additional time for review.

Comment 94—One commenter says it may be in the best interest of the public for the Commission to provide notification on its Web site that reports of harm may be updated, revised, or corrected, but in a manner that will not chill submissions by consumers. The commenter adds that if a report is altered, consumers automatically should receive via e-mail, updated information regarding their report of harm.

Response—Section 6A(c)(4) of the CPSA allows the Commission to redact or correct reports of harm for materially inaccurate information. The current system requirements do not provide for updates on individual reports via e-mail. However, consumers are free to check the Web site for changes.

Comment 95—Some commenters would have us audit material inaccuracy claims to ensure that manufacturers and others are making such claims in good faith—instead of frivolous claims to block public disclosure of critical safety hazard information.

Response—Section 6A(d) of the CPSA requires the Commission to submit to the appropriate congressional committees an annual report on the Database, which must include the number of reports and comments for the year, and the number of corrected or removed reports and comments for the year from the Database. We believe this statutory requirement will allow us to address the suggestion by the commenters that the Commission audit material inaccuracy claims to ensure that such claims are being asserted in good faith and not frivolously. We also believe that by clarifying the burden of proof requirement to § 1102.26, such claims will be supported and made in good faith.

k. Proposed § 1102.26(k)—Commission Action in Absence of a Request

Proposed § 1102.26(k) would provide that the Commission may review a report of harm or manufacturer comment on its own initiative following the same notices and procedures set forth in § 1102.26(g) through (j).

We received several comments related to this section, which resulted in no changes to the final rule.

Comment 96—One commenter states that Commission-initiated reviews of materially inaccurate information should be reviewed with the submitter or the manufacturer before publication of correction of any material inaccuracy.

Response—We will provide notice of the result of a Commission-initiated review to the manufacturer, where such a review results in the Commission taking an action under section 6A(c)(4) of the CPSA to address information it deems materially inaccurate. However, the statute does not require us to await a manufacturer's comment or to inform the submitter of the report of harm before taking any action to address the material inaccuracy, and so we will not revise the rule as suggested by the commenter.

Comment 97—One commenter asserts that any inaccuracy in a report should warrant removal of the entire report until all other facts can be verified and a corrected report can be posted.

Response—Section 6A(c)(4) of the CPSA requires that the Commission make a determination regarding a material inaccuracy claim before we may take steps to resolve the claim. Adopting the commenter's suggestion to remove a report for any inaccuracies would be contrary to section 6A(c)(4) of the CPSA, which allows materially inaccurate information to be removed, added to, or corrected only after a determination of material inaccuracy. Under the commenter's suggestion, a report with an error in the description of the incident, such as the time of day, or the color of the product, would have to be removed. We do not believe that such information would meet the threshold for material inaccuracy, and so we will not revise the rule as suggested by the commenter.

4. Proposed § 1102.28—Publication of Reports of Harm

Proposed § 1102.28(a) would explain that reports of harm will be published in the Database as soon as practicable, but no later than 10 business days after such report of harm is transmitted by the CPSC to the manufacturer or private labeler.

Proposed § 1102.28(b) would explain an exception to the 10-business day deadline where reports of harm may be published beyond the 10-day time frame if we determine that the report of harm misidentifies or fails to identify all manufacturers or private labelers. The information would have to be corrected through the procedures for materially inaccurate information. The provision also would state that once the manufacturer or private labeler has been identified correctly, the time frames in § 1102.28(a) will apply.

We received several comments related to this section, which did not result in any modifications to the final rule. On our own initiative, we have corrected an internal citation error in § 1102.28(b) from § 1102.10(c) to § 1102.10(d).

Comment 98—Several commenters assert that § 1102.28(b) would not provide sufficient time to investigate meaningfully and respond to reports of harm. Some commenters state that a company "needs the time to review its files, retrieve test reports, confer with its many suppliers, etc. A meaningful comment period is essential to the development of a meaningful consumer complaint database." The commenters note that this places a heavy burden on manufacturers, and that we should consider adopting provisions for exceptions and extensions, perhaps up to 30 days, where the 10-day time frame is not possible, or would be "manifestly unfair." The commenters also state that we should work with industry to develop realistic time frames for businesses to respond.

Response—We are bound by the time frame set forth in section 6A(c)(3)(A) of the CPSA and do not have the authority to establish a different time frame. Moreover, establishing a different time frame would be inconsistent with the direction given in section 6A(f)(1) of the CPSA to not apply the provisions of section 6(a) and (b) of the CPSA to reports of harm. Section 6(b) of the CPSA requires that we wait 15 days after notifying a manufacturer of our intent to publicly disclose manufacturer-specific information to the public. In contrast, under section 6A of the CPSA, once we transmit a report of harm to a manufacturer or private labeler, we must publish the report of harm no later than the tenth business day after transmission unless a determination of material inaccuracy has been made.

Comment 99—A commenter states that reports of harm submitted after a certain time period (*e.g.,* one year) following the alleged harm should not be published.

Response—For the reasons provided in response to Comment 19 above, we are not adopting this suggestion, which is not required by section 6A(b) of the CPSA.

5. Proposed § 1102.30—Publication of Manufacturer Comments

Proposed § 1102.30 would explain that the Commission will publish manufacturer comments that meet the minimum requirements in proposed § 1102.12(c) at the same time as a report of harm is published or as soon as practicable thereafter. The proposal would provide examples of circumstances that may make it impracticable to publish a manufacturer comment at the same time as a report of harm: (1) The Commission did not receive the comment until on or after the publication date of the report of harm; or (2) the Commission is resolving a claim that the manufacturer comment contains materially inaccurate information.

We received several comments on this section, which has been finalized with modification. On our own initiative, we have corrected the internal citations to state that publication of a manufacturer comment is subject to §§ 1102.12, 1102.24, and 1102.26 of the final rule. This correction is consistent with § 1102.28(a), stating that publication of reports of harm are subject to §§ 1102.10, 1102.24, and 1102.26. In addition, we struck the second example of a circumstance that would make it impracticable to publish a manufacturer comment at the same time as a report of harm because it was inaccurate. A claim by a third party that a manufacturer comment contains a material inaccuracy could be made only after the manufacturer comment had already been published in the Database. A manufacturer comment would remain in the Database until the Commission made a determination about any alleged material inaccuracy.

Comment 100—One commenter suggests that information published in the Database (reports of harm and manufacturer comments), and the fact of its publication, should be declared inadmissible as evidence to establish the truth of such information.

Response—The commenter's suggestion goes beyond the scope of this rulemaking. We do not believe that section 6A of the CPSA authorizes us to issue a regulation that would address the admissibility in judicial proceedings of information in the Database. Such matters are left to the legislative and judicial branches. For example, courts can decide whether to exclude database entries as inadmissible based on the arguments advanced by the commenter.

However, we will treat information contained in the Database (reports of harm and manufacturer comments) in the same manner in which we currently treat other official agency records that are sought by litigants for use in private litigation. Current regulations, at 16 CFR 1016.3(b), provide a process for authentication of official agency records by the Secretary of the Commission, and requests for authentication of information contained in the Database should be made in accordance with that regulation.

Comment 101—One commenter is concerned about whether comments would always be displayed when a report of harm is accessed through the Database. This commenter reasons that, absent such a requirement, there is a risk that a search of the Database might reveal a report of harm without also revealing a related comment.

Response—Comments associated with a report of harm will always be displayed when a report of harm is accessed through the Database, provided the comment meets the minimum requirements for publication (see § 1102.12(a)). However, if a comment does not meet the minimum requirements for publication, for example, when we do not have the consent of the manufacturer or private labeler to publish the comment to the Database, it will not be published in the Database and, therefore, will not be displayed when the corresponding report of harm is accessed.

D. Proposed Subpart D—Notice and Disclosure Requirements

1. Proposed § 1102.42—Disclaimers

Proposed § 1102.42 would require a disclaimer stating that the CPSC does not guarantee the accuracy, completeness, or adequacy of the contents of the Database, particularly with respect to the accuracy, completeness, or adequacy of the information submitted by persons outside the CPSC. This provision requires that the Database prominently and conspicuously display such a disclaimer on the Database and on any documents printed from the Database.

Several comments were received on this section, which has been finalized with one slight modification, shortening the second mention of the Database to "Database."

Comment 102—One commenter would have the disclaimer for the Database read as follows: "The fact of publication in whole or in part in the Consumer Product Safety Information Database, or later modification, retraction or removal therefrom, may not be used to establish the truth or falsehood of any reported allegations or comment in any related litigation."

Response—In proposed § 1102.42 we provided the following disclaimer, which would be displayed prominently and conspicuously on the Database and on any documents that are printed from the Database: "The Commission does not guarantee the accuracy, completeness, or adequacy of the contents of the Consumer Product Safety Information Database, particularly with respect to the accuracy, completeness, or adequacy of information submitted by persons outside of the CPSC." The commenter's proposed revision of the disclaimer regarding the use of information in any related litigation speaks to the issue of whether Database information is inadmissible in other forums. We will not revise the rule because admissibility is a matter for the legislative and judicial branches.

Comment 103—One commenter would amend the Disclaimer section to have the disclaimer read: "prominently and conspicuously displayed on the database and on any documents that are downloaded, printed or otherwise transferred from the Database." This commenter suggests the use of an electronic watermark. Another commenter notes that the disclaimer should be repeated at every chance on the Database, on any intake complaint forms, and on the information released in the Database.

Response—The disclaimer was specified in section 6A(b)(5) of the CPSA and is described in § 1102.42. We will conspicuously display the disclaimer on Web pages, including the online incident report form, and documents that can be printed or otherwise transferred from the Database. At this time our system does not create, via software, a permanent disclaimer that goes on any data exported from the Database.

Comment 104—One commenter notes that we should clarify that the disclaimer will be "prominently and conspicuously" displayed on each document in the Database when it is displayed for electronic review, as well as if and when the document is printed (even remotely to nongovernmental computers). This commenter states that it is important so as not to be viewed as self-authenticating public records under the Federal Rules of Evidence and state rules of evidence.

Response—We have described how the disclaimer will be displayed on the Database and on printed documents. How a court will treat any document printed from the Database is dependent upon how the document is presented and whether a court would view the document as self-authenticating under

the appropriate Federal or State evidentiary rules.

Comment 105—Some commenters criticize the proposed disclaimer, stating that the Commission did not indicate clearly that reports of harm included in the Database contained information submitted by persons outside of the Commission.

Response—Section 1102.42 uses the disclaimer found in section 6A(b)(5) of the CPSA, which states that the Commission does not guarantee the accuracy, completeness, or adequacy of the contents of the Database; however, we added language strengthening this disclaimer by drawing particular reference to the accuracy, completeness, or adequacy of information submitted by persons outside of the CPSC. Therefore, we believe that we have addressed sufficiently the concerns raised by the commenters, by notifying users of the Database that information in the Database has been provided by individuals outside of the Commission.

Comment 106—One commenter states that the disclaimer in § 1102.42 does not go far enough in explaining the limitations of the data, particularly in "data sets" produced by conducting a search of the Database. This commenter states that the disclaimer should explain the anecdotal nature of the data, and that it cannot be used for broad, statistical purposes; the commenter also states that the disclaimer should state clearly the concerns about accuracy, completeness, or adequacy. The commenter suggests that the disclaimer explain the lack of verification by the CPSC of the "facts" in the reports, and caution users against drawing conclusions about the named products based on these data.

Response—We believe that we have addressed adequately these concerns by proposing a disclaimer that closely tracks the statute, but draws particular attention to the fact that the Database contains information submitted by persons outside of the Commission. The Database is not a Database of government-generated data. The information is generated by external third parties. The Database will be searchable and sortable, as required by section 6A. The disclaimer speaks to the anecdotal nature of the data.

2. Proposed § 1102.44—Applicability of Sections 6(a) and (b) of the CPSA

Proposed § 1102.44(a) would explain that sections 6(a) and (b) of the CPSA do not apply to the submission, disclosure, and publication of information provided in a report of harm. Proposed § 1102.44(b) would apply sections 6(a) and (b) of the CPSA to information received by the Commission pursuant to section 15(b) of the CPSA, and to information received by the Commission pursuant to any other voluntary or mandatory reporting program established between a retailer, manufacturer, or private labeler.

We received several comments related to this section, which has been finalized without substantive change. We have made two internal citation corrections. In § 1102.44(a), we corrected a citation from § 1102.10(c) to § 1102.10(d), and in § 1102.44(b), we corrected a citation from § 1102.42 to § 1102.44(a), and we shortened the name of the Database to "Database."

Comment 107—One commenter states that, "notwithstanding Congressional direction for this database," section 6 of the CPSA should apply to information in the Database. The commenter further states that "Section 6(b) of the CPSA was not repealed by the CPSIA." The commenter asserts that the Commission should take reasonable steps to ensure that the information published in the Database is "accurate and fair in the circumstances" and that accuracy protections of section 6 of the CPSA contribute to the "ultimate release of information that consumers can reasonably rely upon."

Response—We do not agree that we can "opt" to apply sections 6(a) and (b) of the CPSA to the submission, disclosure, and publication of information provided in a report of harm when section 6A(f)(1) of the CPSA provided an express exemption to sections 6(a) and (b) of the CPSA for reports of harm submitted to the Database. Thus, § 1102.44 continues to state that sections 6(a) and (b) of the CPSA do not apply to the submission, disclosure, and publication of information provided in a report of harm that meets the minimum requirements for publication in § 1102.10(c).

Comment 108—One commenter is concerned about whether we will retain, as agency records, the originals of documents that have subsequently been modified or excluded from the Database because of claims of material inaccuracy. The commenter explains that it believes that the Database provisions in the statute required that the originals be purged as records of the agency. The commenter asks that, if we disagree or believe that the Federal Records Act requires those documents to be maintained, we make it clear that the documents are still subject to sections 6(a) and (b) of the CPSA if requested under FOIA or otherwise.

Response—We disagree with this commenter's analysis that information purged from the Database does not comprise official agency records subject to the Federal Records Act; therefore, when we receive requests for information purged from the Database under the FOIA or otherwise, we will invoke all applicable Federal laws, including sections 6(a) and (b) of the CPSA, prior to the release of any such information.

Comment 109—One commenter asks that we clarify that reports submitted under section 15 of the CPSA and reports submitted under other voluntary retailer reporting programs would not be disclosed in the Database. The commenter's concern is that the current confidentiality protections surrounding this data facilitate dialogue between retailers and the CPSC. The commenter is concerned that, if that level of trust is compromised, or confidentiality is reduced, it would affect the ability of the CPSC to have full and frank discussions with manufacturers and retailers.

Response—Section 6A of the CPSA exempts reports of harm submitted to the Database from sections 6(a) and (b) of the CPSA; however, it clearly states that it does not exempt reports submitted under section 15 of the CPSA or reports submitted under any other mandatory or voluntary retailer, manufacturer, or private labeler reporting program with the Commission. Therefore, § 1102.44 specifically states that information received by the Commission pursuant to section 15 of the CPSA or any other mandatory or voluntary reporting program established between a retailer, manufacturer, or private labeler and the Commission is not exempted from the requirements of sections 6(a) and (b) of the CPSA. This means that the Commission could not publish such information in the Database without first complying with the notice provisions of sections 6(a) and (b) of the CPSA. In this phase of the Database, we are not publishing reports submitted under section 15(b) of the CPSA or reports submitted under any other mandatory or voluntary retailer, manufacturer, or private labeler reporting program. Comments Regarding Implementation of the Database Unrelated to a Specific Section in the Rule.

Comment 110—The Commission should commit resources for educational outreach and training, and publish an official guidance tailored specifically to manufacturers and private labelers.

Response—We have committed staff and support resources dedicated to industry and consumer education

regarding the Database. This effort includes developing a process to identify, confirm, register, and train businesses that wish to utilize the Business Portal to electronically respond to reports of harm.

We are working with industry trade associations and consumer advocacy organizations in this effort. Documentation and other support materials, as well as information sessions will be available in the months preceding the "go-live" date. Calendar dates for information sessions will be posted on the Public Calendar on our Web site.

Comment 111—One commenter states that unverified reports in the Database should not create section 15 reporting obligations. The commenter states that because submitters are not required to provide contact information to manufacturers, unverified and inaccurate reports are bound to end up in the Database. The commenter states that the rule should state that transmitted reports of harm will not trigger any CPSA reporting requirement, due to the nature of the contents of the Database and its purpose, and that the overall purpose is to provide a tool for consumers to obtain reliable information, rather than be a source of information to manufacturers about potential product issues.

Response—Section 6A does not specifically exempt Database information from consideration in section 15 cases and, therefore, we will not adopt the suggestion that we specifically exclude information in the Database from consideration in such cases. While it is true that the Database is subject to a disclaimer that the Commission does not guarantee the accuracy, completeness, or adequacy of the contents of the Database, information in the Database will be verified by the submitter. Information in the Database may be used for a variety of purposes, not the least of which could be identifying potential hazards associated with consumer products whether by the manufacturer or the Commission.

Comment 112—A commenter states that the rule should ensure that users do not circumvent minimum requirements for Database entry by posting incidents and comments through Commission social media outlets. It would be appropriate to obtain some assurances that this will not be permitted.

Response—On the Web pages of all of the social media accounts utilized by the Commission, clear and conspicuous policies are posted regarding the appropriate way to post content related to incident reporting and directing users to the Database for such purposes.

Comment 113—Some commenters state that it is "crucial" for the CPSC to implement the Database in the narrowest scope possible and then expand it (*i.e.,* start with specific product categories that present the most risk and gradually open up the Database) to other products. Commenters state that this would ensure reliability and the long-term success of the Database by minimizing mistakes, minimizing the impact of mistakes, providing the CPSC with flexibility to make changes, reducing the burden on CPSC resources, and enabling time to work out an efficient means of handling the paperwork involved in maintaining the Database. The commenters estimate that it would take 22 dedicated full-time employees to handle the potential increase in incident reports. The commenters state that the CPSC has the opportunity to engage stakeholders in discussions on how to improve and resolve problems as they arise. Commenters state that the Database should include a forum for this type of implementation discussion, naming *Facebook* development as an example. Commenters allege that staged implementation is consistent with congressional intent and the commenters point to the General Accounting Office study requirement as indication that Congress knew the Database would need to be modified and improved as time progresses.

Response—Congress required that implementation of the Database occur 18 months after our implementation report to Congress. We submitted our implementation report in September 2009. We are on track to fulfill that mandate.

We already have started the process of planning and testing internal business processes against the requirements of the implemented software. This includes planning for data intake, processing, and notification of manufacturers and private labelers. We are aligning staff and support resources to new business processes in anticipation of the implementation. We anticipate this alignment around new processes to be completed several months before the "go-live" date in March 2011. We believe these steps address the commenters concerns and would obviate the need for a phased introduction of the Database.

Comment 114—"[T]he regulation does not include crucial information on how this database will be implemented. Although the CPSC has shared some of its plan with the public, much is still not known. It is quite possible that the format for submitting reports of harm and the data input techniques to be used for reporting, will have a major impact on the accuracy of the data in the database."

Response—The implementation plan is not appropriate for the text of a regulation. Starting in September 2009, we submitted a report to Congress on implementation of the Database. We held a public hearing on November 10, 2009, regarding implementation. In addition, we held a two-day workshop in January 2010, regarding implementation, and requested comments. All of this information is available on the Commission's Web site at *http://www.cpsc.gov.* Thus, we have committed staff and support resources through the "go-live" date in a dedicated effort to inform industry and educate consumers regarding the Database. This effort further includes creation of a Web site on *http://www.saferproducts.gov* devoted to Database education and implementation issues, which is periodically updated with new content. The Commission has also conducted focus groups on the input forms and Database screens. The Commission plans to send staff to attend and speak at conferences to teach on the Database. It also plans to develop a process to identify, confirm, register, and train businesses that wish to utilize the Business Portal to electronically respond to reports of harm.

We are working with industry trade associations and consumer advocacy organizations in this effort. Documentation and other support materials are being developed, and information sessions will be available in the months preceding the "go-live" date. Calendar dates for information sessions will be posted on the Public Calendar on our Web site.

Comment 115—Some commenters state that the manner of registering and contacting manufacturers and private labelers will greatly affect their ability to comment on the data in a timely fashion. A first look at the proposed manufacturer registration system identified a number of significant issues. To insure that the Database properly serves its intended purpose, the details of the Database should be shared with the public for comment before it is implemented.

Response—Our education and outreach efforts are described above in response to Comment 115. We are actively engaged in an industry and consumer education effort that includes developing a process to identify, confirm, register, and train businesses that wish to utilize the Business Portal to electronically respond to reports of

harm. Documentation and other support materials, as well as information sessions will be available in the months preceding the "go-live" date. Calendar dates for information sessions will be posted on the Public Calendar on our Web site.

Comment 116—Some commenters state that valid reports of harm may come from the same IP address, such as government, health facilities, and consumer organizations, and that these multiple, but valid, reports should be accepted.

Response—Multiple, valid reports will be accepted from the same IP address. The first release of the software will contain features to protect against computer-generated reports and flag potentially duplicate reports for staff review.

The software and mechanisms that we use to detect multiple reports from the same IP address will be used to detect a nefarious denial of service type of attack. A denial of service attack is an attempt to make a computer resource unavailable to its intended users. Commonly, the perpetrator of such an attack would saturate a public Web site with extraordinarily high numbers of information requests. Such computer-generated high volume would limit the target's ability to respond to legitimate (human) use.

Comment 117—One commenter states that the Report to Congress mockup shows a static, noncheckable verification, and suggests that we require consumers to affirmatively attest by clicking on something in the portal.

Response—We noted this suggested requirement/feature in several forums, and have implemented it by requiring that submitters select a check mark box on the incident report form for it to be submitted and published.

Comment 118—Commenters discuss discouraging false complaints regarding consumer products. The commenters suggest that the final rule contain a mechanism for the prompt removal of false complaints. Computer-generated reports should not be accepted. Another commenter states that the system should detect multiple reports from the same IP address, which are then flagged for further inspection.

Response—We agree that the Database should not contain materially fraudulent or false complaints about consumer products. Section 1102.26 details the designation and disposition of materially inaccurate information. Also, the Database software will assist with fraud prevention. The Database implementation team is working closely with the enterprise information security team to ensure that the Database uses industry best practices for security and complies with federal and CPSC specific security requirements. For example, the first release of the software will contain features to protect against computer-generated reports and flag potentially duplicate reports for CPSC review. However, despite our best efforts to ensure that legitimate reports of harm are being filed, we cannot independently verify that every report of harm submitted is legitimate and accurate. Congress required that the Database contain a disclaimer, which is set forth in § 1102.42 of the final rule.

IV. Environmental Impact

The Commission's regulations at 16 CFR 1021.5(a) are considered to "have little or no potential for affecting the human environment," and environmental assessments and impact statements are not usually prepared. *See* 16 CFR 1021.5(c). The final rule contains the Commission's interpretation of the statutory requirements set forth in section 6A of the CPSA, as added by section 212 of the CPSIA, for the inclusion of information related to reports of harm involving the use of consumer products or other products or substances regulated by the Commission in a publicly available and searchable database. As such, the proposed rule is not expected to have an adverse impact on the environment. The Commission concludes that no environmental assessment or environmental impact statement is required.

V. Paperwork Reduction Act

The final rule contains information collection requirements that are subject to public comment and review by the Office of Management and Budget (OMB) under the Paperwork Reduction Act of 1995 (44 U.S.C. 3501–3520). In a May 24, 2010 **Federal Register** notice regarding the proposed rule (75 FR 29156, 29173–75), we described the information collection and the annual reporting burden. Our estimate included the time for reviewing instructions, searching existing data sources, gathering and maintaining the data needed, and completing and reviewing each collection of information.

We invited comments on: (1) Whether the collection of information is necessary for the proper performance of the CPSC's functions, including whether the information will have practical utility; (2) the accuracy of the CPSC's estimate of the burden of the proposed collection of information, including the validity of the methodology and assumptions used; (3) ways to enhance the quality, utility, and clarity of the information to be collected; and (4) ways to minimize the burden of the collection of information on respondents, including through the use of automated collection techniques, when appropriate, and other forms of information technology. We received one comment about the burden estimates contained in the proposed rule. The comment summary and response appear below.

Comment: A commenter states that the annual reporting burden is significantly underestimated because the Commission based the estimate on current reporting figures. Also, the commenter states that it will take manufacturers and private labelers more than 4 hours to investigate and respond to a report of harm.

Response: With regard to the estimated annual reporting burden and time needed for manufacturers and private labelers to investigate and respond to a report of harm, the preamble to the proposed rule explained that we based our estimates on our experience with our incident report forms for fiscal year 2009 (75 FR at 29174). The commenter has not provided any alternative data or methodology that would support adjusting our estimates. We also note that in our research on other agency databases, we were unable to determine conclusively whether CPSC will experience an increase in reports when the public facing database is launched. Accordingly, we decline to alter or amend the estimated burdens.

Title: Publicly Available Consumer Product Safety Information Database.

Description: The final rule allows consumers to submit reports of harm involving the use of consumer products or other products or substances regulated by the CPSC, and also allows manufacturers of such products or substances to comment on the reports of harm. The reports and comments will be part of the Database operated and maintained by the CPSC. A manufacturer identified in a report of harm and who receives a report of harm from the CPSC may request that portions of the report be designated as confidential information. Any person or entity reviewing a report of harm or manufacturer comment may request that the report or comment, or portions thereof, be excluded from the Database or corrected by the CPSC because it contains materially inaccurate information.

Description of Respondents: Persons who wish to submit reports of harm involving the use of consumer products or other products or substances regulated by the CPSC and

manufacturers of such products or substances who wish to comment on those reports of harm, pursuant to section 6A of the Consumer Product Safety Act (CPSA) (15 U.S.C. 2055a). In addition, any person or entity reviewing a report of harm or manufacturer comment, either before or after publication in the Database, may request that the report of harm or manufacturer comment, or portions thereof, be excluded from the Database or corrected by the CPSC because it contains materially inaccurate information.

We estimate the burden of this collection of information as follows:

TABLE 1—ESTIMATED ANNUAL REPORTING BURDEN

16 CFR Section	Number of respondents	Frequency of responses	Total annual responses	Minutes per response	Total burden, in hours
16 CFR 1102.10(b)(1), (3) Reports of harm—electronic	11,534	1	11,534	12	2,307
16 CFR 1102.10(b)(2) Reports of harm—telephone	3,329	1	3,329	10	555
16 CFR 1102.10(b)(4) Reports of harm—paper	277	1	277	20	92
16 CFR 1102.12(b)(1), (2) Manufacturer comments—electronic	5,753	1	5,753	255	24,450
16 CFR 102.12(b)(3) Manufacturer comments—paper	1,817	1	1,817	270	8,177
16 CFR 1102.24 Requests to treat information as confidential—electronic	345	1	345	15	86
16 CFR 1102.24 Requests to treat information as confidential—paper	109	1	109	30	54
16 CFR 1102.26 Requests to treat information as materially inaccurate—electronic	1,726	1	1,726	30	863
16 CFR 1102.26 Requests to treat information as materially inaccurate—paper	545	1	545	60	545
Total					37,129

There are no capital costs or operating and maintenance costs associated with this collection of information.

Our estimates are based on the following:

The CPSC is in the process of developing the forms that will be used by consumers and manufacturers to submit reports and comments for inclusion in the Database. Because those forms are still under development, for present purposes, we based our burden estimates on our experience with similar forms and processes, and on information gleaned from manufacturers. Specifically, the CPSC currently has an incident report form that consumers and others use to report consumer safety incidents to the agency. The CPSC provides most of those consumer complaints to the manufacturer, and the manufacturer may provide comments to the agency.

For present purposes, we assume that the Database will receive the same number of reports of harm as the CPSC received of incident reports in fiscal year 2009, and that the numbers by manner of submission to the CPSC (*i.e.,* electronic, telephone, paper) will be the same. Thus, using the data from fiscal year 2009, we estimate that we will receive a total of 15,140 reports of harm (11,534 by electronic means, 3,329 by telephone, and 277 by paper submissions). We had already estimated the time associated with the electronic and telephone submission of incident reports at 12 and 10 minutes, respectively and so used those figures for present purposes as well. We estimate that the time associated with a paper form would be 20 minutes on average. Thus, we estimate the total burden hours associated with the submission of reports of harm to be 2,954 hours ((11,534 electronic report × 12 minutes per report) + (3,329 telephone reports × 10 minutes per report) + (277 paper reports × 20 minutes per report) = 177,238 minutes or approximately 2,954 hours)).

In 2008, manufacturers submitted comments to the CPSC in response to a consumer complaint forwarded to the manufacturer about 40 percent of the time. We estimate that the response rate will increase in the case of the Database; currently, neither the incident reports nor manufacturer comments are routinely public. We estimate that the manufacturer response rate will increase 25 percent, up to a 50 percent response rate. Therefore we expect to receive half as many total manufacturer comments as reports of harm (15,140 reports of harm × 0.5 manufacturer comments per report of harm = 7,570 manufacturer comments). In terms of the manner of commenting, currently we do not keep track of how many manufacturer comments are submitted electronically versus in paper form. Because the Database will be online, we will assume that most manufacturers will utilize electronic options for participating in the Database, especially when the Database (unlike the current incident reporting system) will not give manufacturers the option of submitting their comments by phone. However, to ensure that we avoid inadvertently underestimating the burden, we will assume that manufacturers would submit electronically at the same rate. That equates to an estimate of 5,753 manufacturer comments submitted electronically, and 1,817 submitted on paper.

We also will assume that there are two actions involved in a manufacturer comment: (1) The research and preparation necessary to comment; and (2) the act of providing the comment. To estimate how much time manufacturers will spend researching and preparing to comment, we contacted three manufacturers that have experience submitting comments in response to incident reports. The manufacturers each reported a range of time, because time required in preparing a comment can vary greatly. The three ranges were 15 minutes to 4 hours, 10 minutes to 5 hours, and 10 minutes to 3 hours. For purposes of estimating the burden, we used the average high end of these ranges, 4 hours, for that portion of the burden estimate. Based on our experience with the current manufacturing comment process, we estimate that manufacturers will spend between 5 and 30 minutes actually providing the comment, depending on the length and complexity of their comment. For the purposes of this estimate, we use the high end of that range for paper submissions (30 minutes) and the midpoint for electronic (15 minutes). Thus, the

estimated burden associated with manufacturer comments is approximately 32,607 hours ((5,753 electronic comments × 255 minutes per comment) + (1,817 paper comments × 270 minutes per comment) = 1,957,605 minutes or approximately 32,627 hours).

Regarding requests to designate information as confidential, we anticipate that there are very limited circumstances under which confidential information will be included in a report of harm; by its very nature, such information is not available to the public. Accordingly, we assigned a value of 3 percent to our estimation of the rarity with which we expect to receive such requests. Three percent of the total number of reports of harm estimated (15,140) results in an estimate of 454 requests to designate information as confidential. The proposed rule would specify what must be included in such a request (§ 1102.24(b)); it is concrete information that we expect will be known or readily attainable by the entity filing the request. We estimate that it will take 15 minutes to submit such a request electronically. Because it would take longer to convey the necessary information on paper, and to avoid inadvertently underestimating the burden, we estimate that it will take twice as much time, or 30 minutes, to submit the request on paper. We employed the same assumptions as used above to predict how many requests will be submitted electronically (454 requests × 76 percent electronic submission) to arrive at an estimate of 345 electronic requests and 109 paper requests. We multiplied 345 electronic requests by 15 minutes, resulting in 5,175 minutes, or about 86 burden hours for the electronic requests. Similarly, we multiplied 109 paper requests by 30 minutes, resulting in 3,270 minutes, or about 54 burden hours for the paper requests.

Regarding requests to designate information materially inaccurate, roughly 10 percent of the manufacturer comments that we currently receive contain a claim that the incident report contained inaccurate information. We used that figure to estimate that the number of requests to treat information as materially inaccurate will be 10 percent of the total number of reports of harm and manufacturer comments that we expect, or 2,271 ([15,140 reports + 7,570 comments] × 10 percent). Section 1102.26(b) of the proposed rule would specify what must be included in such a request. Most of the information will be known or readily attainable by the person or entity filing the request, but we estimate it will take longer to file a request to treat information as materially inaccurate than to file a request to treat information as confidential because with a request related to material inaccuracy one must provide evidence of the inaccuracy as described in § 1102.26(b)(4). We anticipate that this will double the amount of time it takes to file the request, or require 30 minutes for an electronic request and 60 minutes for a paper request. Employing the same assumptions concerning the method of submission, we estimate that there will be 1,726 electronic requests to treat information as materially inaccurate (2,271 total requests × 76 percent electronic = 1,726). Because each electronic request is estimated to take 30 minutes, we estimate the resulting burden to be 863 hours (1,726 requests × 30 minutes = 51,780 minutes, or 863 burden hours). Similarly, 545 paper requests (2,271 requests × 24 percent paper = 545), at 60 minutes each to complete, results in a burden of 545 hours (545 paper requests × 60 minutes = 32,700 minutes, or 545 hours).

The total estimated burden, therefore, is 37,129 hours.

VI. Executive Order 12988

According to Executive Order 12988 (February 5, 1996), agencies must state in clear language the preemptive effect, if any, of new regulations. This regulation is issued under the authority of the CPSA, wherein preemption is discussed in section 26 of the CPSA. Section 26 of the CPSA only addresses the preemptive effect of consumer product safety standards under the CPSA. The current rule is not a consumer product safety standard under the CPSA. Accordingly, the Commission has determined that this rule does not contain requirements that impact the states.

VII. Regulatory Flexibility Act

The Regulatory Flexibility Act ("RFA") generally requires that agencies review proposed rules for their potential economic impact on small entities, including small businesses. Section 603 of the RFA calls for agencies to prepare and make available for public comment an initial regulatory flexibility analysis describing the impact of the proposed rule on small entities and identifying impact-reducing alternatives. 5 U.S.C. 603. Section 605(b) of the RFA, however, states that this requirement does not apply if the head of the agency certifies that the rule will not, if promulgated, have a significant economic impact on a substantial number of small entities, and the agency provides an explanation for that conclusion.

The proposed rule did not contain an initial RFA analysis, stating that preliminary analysis establishes that the proposed rule will have little or no effect on small businesses. While the agency anticipates that the new Database likely will increase the number of consumer-generated reports over the number of incident reports currently filed with the Commission, this will not have a significant impact on a substantial number of small businesses. Because of the small increase in the expected number of incident reports, relative to the large number of small manufacturers that produce consumer products, relatively few small manufacturers will receive even a single incident report. Moreover, because small manufacturers have smaller sales volumes than large manufacturers, they are less likely than large manufacturers to receive an incident report for comment. Even if a small firm does receive an incident report and chooses to respond, the amount of time to do so likely would not be more than approximately 4 hours, on average.

The Commission invited comment on this analysis and the preliminary certification statement. One comment was received as discussed below. Based on this, we decline to provide a complete RFA analysis on the economic impact of the rule on small businesses prior to implementation of the final rule, and certify that no such analysis is required.

Comment—One commenter disagrees that the proposed rule will have little or no impact on small businesses based on the time and resources required to respond to reports of harm. The commenter states that small businesses must contract out for legal, engineering, and testing services, which will all likely take more than a few hours to complete an analysis and which will place a significant financial burden on these small firms. Furthermore, when "a few hours" is multiplied by the number of small businesses subject to this rule, the commenter claims the time burden becomes substantial. Based on the resource allocation required of small businesses, the commenter states that the Commission should complete a regulatory flexibility analysis on the economic impact of the rule on small businesses prior to implementation of the proposed rule.

Response—Our analysis does not rule out the possibility that some small businesses may be adversely affected by the rule. However, under the RFA, the inquiry is whether the rule would have a significant economic impact on a

substantial number of small entities. If a severe safety defect is alleged in an incident report, a small business may need to devote substantial resources to investigate the incident. However, such an investigation would not necessarily be attributable to the Database, because a severe product defect would need to be investigated, even in the absence of the Database. Moreover, it is expected that only a small proportion of small businesses will receive even a single incident report.

According to our analysis, no more than an additional five percent of small manufacturers of consumer products will be affected by the Database rule annually. Of these, only a very small percentage of the incidents reported would merit a large investigation effort. Based on the CPSC's Freedom of Information Act ("FOIA") experience, it is rare that a small firm devotes substantial time and effort responding to incident reports. Thus, while it is possible that a small number of small businesses may experience a "significant" impact in investigating certain incidents, the number of small businesses experiencing such an impact would not be "substantial."

Moreover, many impacts attributed to the Database rule are indirect in that they do not arise from direct regulation of the production activities of entities. Consequently, these impacts generally are not subject to the analytical requirements of the RFA. Nevertheless, in forming a basis for certification, we performed a threshold analysis, which quantifies the expected impact of a regulation, and to a large degree, forms the analytical substance of a formal RFA analysis. In sum, it is expected that the average cost of responding electronically to one incident report is $280, and that the impact on an average small manufacturer (with revenue of $6.4 million) would amount to about 0.0044 percent of sales. Even if an average small manufacturer received and responded to 10 incident reports during the year, the cost still would be considerably less than one-tenth of one percent of the value of shipments. Further analysis would not change these results or provide additional insight into the expected impacts of the rule. Accordingly, we decline to provide a complete RFA analysis on the economic impact of the rule on small businesses, and will certify that no such analysis is required.

VIII. Effective Date

The Administrative Procedure Act ("APA") generally requires that the effective date of a rule be at least 30 days after publication of a final rule. 5 U.S.C. 553(d). Accordingly, the effective date of the final rule is 30 days after the date of publication of a final rule in the **Federal Register**.

List of Subjects in 16 CFR Part 1102

Administrative practice and procedure, Business and industry, Consumer protection, Reporting and recordkeeping requirements.

■ For the reasons stated above, the Commission amends Title 16 of the Code of Federal Regulations by adding a new Part 1102 to read as follows:

PART 1102—PUBLICLY AVAILABLE CONSUMER PRODUCT SAFETY INFORMATION DATABASE

Subpart A—Background and Definitions

Sec.
1102.2 Purpose.
1102.4 Scope.
1102.6 Definitions.

Subpart B—Content Requirements

1102.10 Reports of harm.
1102.12 Manufacturer comments.
1102.14 Recall notices.
1102.16 Additional information.

Subpart C—Procedural Requirements

1102.20 Transmission of reports of harm to the identified manufacturer or private labeler.
1102.24 Designation of confidential information.
1102.26 Determination of materially inaccurate information.
1102.28 Publication of reports of harm.
1102.30 Publication of manufacturer comments.

Subpart D—Notice and Disclosure Requirements

1102.42 Disclaimers.
1102.44 Applicability of sections 6(a) and (b) of the CPSA.

Authority: 15 U.S.C. 2051, 2051 note, 2052, 2055, 2055a, 2065, 2068, 2070, 2071, 2072, 2076, 2078, 2080, 2087.

Subpart A—Background and Definitions

§ 1102.2 Purpose.

This part sets forth the Commission's interpretation, policy, and procedures with regard to the establishment and maintenance of a Publicly Available Consumer Product Safety Information Database (also referred to as the "Database") on the safety of consumer products and other products or substances regulated by the Commission.

§ 1102.4 Scope.

This part applies to the content, procedure, notice, and disclosure requirements of the Publicly Available Consumer Product Safety Information Database, including all information published therein.

§ 1102.6 Definitions.

(a) Except as specified in paragraph (b) of this section, the definitions in section 3 of the Consumer Product Safety Act (CPSA) (15 U.S.C. 2052) apply to this part.

(b) For purposes of this part, the following definitions apply:

(1) *Additional information* means any information that the Commission determines is in the public interest to include in the Publicly Available Consumer Product Safety Information Database.

(2) *Commission or CPSC* means the Consumer Product Safety Commission.

(3) *Consumer product* means a consumer product as defined in section 3(a)(5) of the CPSA, and also includes any other products or substances regulated by the Commission under any other act it administers.

(4) *Harm* means injury, illness, or death; or risk of injury, illness, or death, as determined by the Commission.

(5) *Mandatory recall notice* means any notice to the public required of a firm pursuant to an order issued by the Commission under section 15(c) of the CPSA.

(6) *Manufacturer comment* means a comment made by a manufacturer or private labeler of a consumer product in response to a report of harm transmitted to such manufacturer or private labeler.

(7) *Publicly Available Consumer Product Safety Information Database,* also referred to as the Database, means the database on the safety of consumer products established and maintained by the CPSC as described in section 6A of the CPSA.

(8) *Report of harm* means any information submitted to the Commission through the manner described in § 1102.10(b), regarding any injury, illness, or death; or any risk of injury, illness, or death, as determined by the Commission, relating to the use of a consumer product.

(9) *Submitter of a report of harm* means any person or entity that submits a report of harm.

(10) *Voluntary recall notice* means any notice to the public by the Commission relating to a voluntary corrective action, including a voluntary recall of a consumer product, taken by a manufacturer in consultation with the Commission.

Subpart B—Content Requirements

§ 1102.10 Reports of harm.

(a) *Who may submit.* The following persons or entities may submit reports of harm:

(1) *Consumers* including, but not limited to, users of consumer products, family members, relatives, parents, guardians, friends, attorneys, investigators, professional engineers, agents of a user of a consumer product, and observers of the consumer products being used;

(2) *Local, state, or federal government agencies* including, but not limited to, local government agencies, school systems, social services, child protective services, state attorneys general, state agencies, and all executive and independent federal agencies as defined in Title 5 of the United States Code;

(3) *Health care professionals* including, but not limited to, medical examiners, coroners, physicians, nurses, physician's assistants, hospitals, chiropractors, and acupuncturists;

(4) *Child service providers* including, but not limited to, child care centers, child care providers, and prekindergarten schools; and

(5) *Public safety entities* including, but not limited to, police, fire, ambulance, emergency medical services, federal, state, and local law enforcement entities, and other public safety officials and professionals, including consumer advocates or individuals who work for nongovernmental organizations, consumer advocacy organizations, and trade associations, so long as they have a public safety purpose.

(b) *Manner of submission.* To be entered into the Database, reports of harm must be submitted to the CPSC using one of the following methods:

(1) Internet submissions through the CPSC's Internet Web site on an electronic incident report form specifically developed to collect such information.

(2) Telephonic submissions through a CPSC call center, where the information is entered on the electronic incident form.

(3) Electronic mail directed to the Office of the Secretary at *info@cpsc.gov,* or by facsimile at 301–504–0127, provided that the submitter completes the incident report form available for download on the CPSC's Internet Web site specifically developed to collect such information.

(4) Written submissions to the Office of the Secretary, Consumer Product Safety Commission, 4330 East West Highway, Bethesda, MD 20814–4408. The Commission will accept only those written reports of harm that use the incident report form developed for the CPSC's Internet Web site; or

(5) Other means the Commission subsequently makes available.

(c) *Size limit of reports of harm.* The Commission may, in its discretion, limit the data size of reports of harm, which may include attachments submitted, where such reports of harm and attachments may negatively impact the technological or operational performance of the system.

(d) *Minimum requirements for publication.* Subject to §§ 1102.24 and 1102.26, the Commission will publish in the Publicly Available Consumer Product Safety Information Database reports of harm containing all of the following information:

(1) *Description of the consumer product.* The description of the consumer product must, at a minimum, include a word or phrase sufficient to distinguish the product as a consumer product, a component part of a consumer product, or a product or substance regulated by the Commission. In addition to a word or phrase sufficient to distinguish the product as a consumer product, a description of a consumer product may include, but is not limited to, the name, including the brand name of the consumer product, model, serial number, date of manufacture (if known) or date code, date of purchase, price paid, retailer, or any other descriptive information about the product.

(2) *Identity of the manufacturer or private labeler.* The name of one or more manufacturers or private labelers of the consumer product. In addition to a firm name, identification of a manufacturer or private labeler may include, but is not limited to, a mailing address, phone number, or electronic mail address.

(3) *Description of the harm.* A brief narrative description of illness, injury, or death; or risk of illness, injury, or death related to use of the consumer product. Examples of a description of harm or risk of harm include, but are not limited to: Death, asphyxiation, lacerations, burns, abrasions, contusions, fractures, choking, poisoning, suffocation, amputation, or any other narrative description relating to a bodily harm or risk of bodily harm. Incident reports that relate solely to the cost or quality of a consumer product, with no discernable bodily harm or risk of bodily harm, do not constitute "harm" for purposes of this part. A description of harm may, but need not, include the severity of any injury and whether any medical treatment was received.

(4) *Incident date.* The date, or an approximate date, on which the incident occurred.

(5) *Category of submitter.* Indication of which category the submitter is in (*i.e.,* consumers, government agencies, *etc.*) from § 1102.10(a).

(6) *Contact information.* The submitter's first name, last name, and complete mailing address. Although this information will not be published in the Database, it is required information for the report of harm. Submitters also may, but are not required to, provide an electronic mail address and a phone number to allow for efficient and timely contact regarding a report of harm, when necessary.

(7) *Verification.* A submitter of a report of harm must affirmatively verify that he or she has reviewed the report of harm, and that the information contained therein is true and accurate to the best of the submitter's knowledge, information, and belief. Verification procedures for each method of submission will be specified.

(8) *Consent.* A submitter of a report of harm must consent to publication of the report of harm in the Database if he or she wants the information to be included in the Database.

(e) *Additional information requested on report of harm.* The minimum requirements (at § 1102.10(d)) for publication of a report of harm in the Database do not restrict the Commission from choosing to seek other categories of voluntary information in the future.

(f) *Information not published.* The Commission will exclude the following information provided on a report of harm from publication in the Database:

(1) Name and contact information of the submitter of a report of harm;

(2) Victim's name and contact information, if the victim or the victim's parent, guardian, or appropriate legally authorized representative, has not provided appropriate legal consent;

(3) Photographs that in the determination of the Commission are not in the public interest, including photographs that could be used to identify a person or photographs that would constitute an invasion of personal privacy based on the Privacy Act of 1974, Public Law 93–579 as amended;

(4) Medical records without the consent of the person about whom such records pertain or without the consent of his or her parent, guardian, or appropriate legally authorized representative;

(5) Confidential information as set forth in § 1102.24;

(6) Information determined to be materially inaccurate as set forth in § 1102.26;

(7) Reports of harm retracted at any time by the submitters of those reports, if they indicate in writing to the Commission that they supplied materially inaccurate information;

(8) Consents and verifications associated with a report of harm; and

(9) Any other information submitted on or with a report of harm, the inclusion of which in the Database, the Commission determines is not in the public interest. The Commission shall consider whether the information is related to a product safety purpose served by the Database, including whether or not the information helps Database users to:

(i) Identify a consumer product;

(ii) Identify a manufacturer or private labeler of a consumer product;

(iii) Understand a harm or risk of harm related to the use of a consumer product; or

(iv) Understand the relationship between a submitter of a report of harm and the victim.

(g) *Reports of harm from persons under the age of 18.* The Commission will not accept any report of harm when the report of harm is or was submitted by anyone under the age of 18 without consent of the parent or guardian of that person.

(h) *Incomplete reports of harm.* Any information received by the Commission related to a report of harm that does not meet the requirements for submission or publication will not be published, but will be maintained for internal use.

(i) *Official records of the Commission.* All reports of harm that are submitted to the Commission become official records of the Commission in accordance with 16 CFR 1015.1. Alteration (or disposition) of any such records will only be in accordance with the procedures specified in this part.

§ 1102.12 Manufacturer comments.

(a) *Who may submit.* A manufacturer or private labeler may submit a comment related to a report of harm if the report of harm identifies such manufacturer or private labeler.

(b) *How to submit.* A manufacturer or private labeler may submit comments to the CPSC using one of the following methods:

(1) A manufacturer or private labeler who registers with the Commission as described in § 1102.20(f) may submit comments through a manufacturer portal maintained on the CPSC's Internet Web site;

(2) A manufacturer or private labeler may submit comments by electronic mail, directed to the Office of the Secretary at *info@cpsc.gov;* or

(3) A manufacturer or private labeler may submit written comments directed to the Office of the Secretary, Consumer Product Safety Commission, 4330 East West Highway, Bethesda, MD 20814–4408.

(c) *What must be submitted.* Subject to §§ 1102.24 and 1102.26, the Commission will publish manufacturer comments related to a report of harm transmitted to a manufacturer or private labeler in the Database if such manufacturer comment meets the following requirements:

(1) *Manufacturer comment relates to report of harm.* The manufacturer or private labeler's comment must relate to information contained in a specific report of harm that identifies such manufacturer or private labeler and that is submitted for publication in the Database.

(2) *Unique identifier.* A manufacturer comment must state the unique identifier provided by the CPSC.

(3) *Verification.* A manufacturer or private labeler must verify that it has reviewed the report of harm and the comment related to the report of harm and that the information contained in the comment is true and accurate to the best of the firm's knowledge, information, and belief.

(4) *Request for publication.* When a manufacturer or private labeler submits a comment regarding a report of harm, it may request that the Commission publish such comment in the Database. A manufacturer or private labeler must affirmatively request publication of the comment, and consent to such publication in the Database, for each comment submitted to the CPSC.

(d) *Information published.* Subject to §§ 1102.24 and 1102.26, the Commission will publish a manufacturer comment and the date of its submission to the CPSC in the Database if the comment meets the minimum requirements for publication as described in paragraph (c) of this section.

(e) *Information not published.* The Commission will not publish in the Database consents and verifications associated with a manufacturer comment.

§ 1102.14 Recall notices.

All information presented in a voluntary or mandatory recall notice that has been made available to the public shall be accessible and searchable in the Database.

§ 1102.16 Additional information.

In addition to reports of harm, manufacturer comments, and recall notices, the CPSC shall include in the Database any additional information it determines to be in the public interest, consistent with the requirements of section 6(a) and (b) of the CPSA.

Subpart C—Procedural Requirements

§ 1102.20 Transmission of reports of harm to the identified manufacturer or private labeler.

(a) *Information transmitted.* Except as provided in paragraphs (a)(1) through (a)(3) of this section, the Commission will transmit all information provided in a report of harm, provided such report meets the minimum requirements for publication in the Database, to the manufacturer or private labeler identified in a report of harm. The following information will not be transmitted to a manufacturer or private labeler:

(1) Name and contact information for the submitter of the report of harm, unless such submitter provides express written consent (for example, by checking a box on the report of harm) to provide such information to the manufacturer or private labeler;

(2) Photographs that could be used to identify a person; and

(3) Medical records, unless the person about whom such records pertain, or his or her parent, guardian, or appropriate legally authorized representative, consents to providing such records to the manufacturer or private labeler.

(b) *Limitation on use of contact information.* A manufacturer or private labeler who receives name and contact information for the submitter of a report of harm and/or a victim must not use or disseminate such information to any other party for any other purpose other than verification of information contained in a report of harm. Verification of information contained in a report of harm must not include activities such as sales, promotion, marketing, warranty, or any other commercial purpose. Verification of information contained in a report of harm may include verification of the:

(1) Identity of the submitter and/or the victim, including name, location, age, and gender;

(2) Consumer product, including serial or model number, date code, color, or size;

(3) Harm or risk of harm related to the use of the consumer product;

(4) Description of the incident related to use of the consumer product;

(5) Date or approximate date of the incident; and/or

(6) Category of submitter.

(c) *Timing.* To the extent practicable, the Commission will transmit a report of harm to the manufacturer or private labeler within five business days of submission of the completed report of harm. If the Commission cannot determine whom the manufacturer or private labeler is from the report of

harm, or otherwise, then it will not post the report of harm on the Database but will maintain the report for internal agency use. Examples of circumstances that may arise that may make transmission of the report of harm impracticable within five business days include, but are not limited to:

(1) The manufacturer or private labeler is out of business with no identifiable successor;

(2) The submitter misidentified a manufacturer or private labeler;

(3) The report of harm contained inaccurate or insufficient contact information for a manufacturer or private labeler; or

(4) The Commission cannot locate valid contact information for a manufacturer or private labeler.

(d) *Method of transmission.* The Commission will use the method of transmission and contact information provided by the manufacturer or private labeler. The Commission will transmit reports of harm to a manufacturer or private labeler who has registered with the Commission as described in paragraph (f) of this section. If a manufacturer or private labeler has not registered with the Commission, the Commission will send reports of harm through the United States mail to the firm's principal place of business, unless the Commission selects another equally effective method of transmission.

(e) *Size limits of manufacturer comments.* The Commission may, in its discretion, limit the data size of comments, which may include attachments submitted, where such comments and attachments may negatively impact the technological or operational performance of the system.

(f) *Manufacturer registration.* Manufacturers and private labelers may register with the Commission to select a preferred method for receiving reports of harm that identify such firm as the manufacturer or private labeler. Manufacturers and private labelers that choose to register with the Commission must:

(1) Register with the Commission through a process identified for such registration;

(2) Provide and maintain updated contact information for the firm, including the name of the firm, title of a person to whom reports of harm should be directed, complete mailing address, telephone number, electronic mail address, and Web site address (if any); and

(3) Select a specified method to receive reports of harm that identify the firm as the manufacturer or private labeler of a consumer product.

(g) *Manufacturer comments.* A manufacturer or private labeler who receives a report of harm from the CPSC may comment on the information contained in such report of harm. The Commission, in its discretion, where it determines it is in the public interest, may choose not to publish a manufacturer comment in the Database. For example, it may not be in the public interest for the Commission to publish comments that, in the unlikely event, contain language reasonably described as lewd, lascivious, or obscene.

§ 1102.24 Designation of confidential information.

(a) For purposes of this section, "confidential information" is considered to be information that contains or relates to a trade secret or other matter referred to in 18 U.S.C. 1905 or that is subject to 5 U.S.C. 552(b)(4).

(b) A manufacturer or private labeler identified in a report of harm and who receives a report of harm from the CPSC may review such report of harm for confidential information and request that portions of the report of harm be designated as confidential information. Each requester seeking such a designation of confidential information bears the burden of proof and must:

(1) Specifically identify the exact portion(s) of the report of harm claimed to be confidential;

(2) State whether the information claimed to be confidential has ever been released in any manner to a person who was not an employee or in a confidential relationship with the company;

(3) State whether the information so specified is commonly known within the industry or is readily ascertainable by outside persons with a minimum of time and effort;

(4) If known, state the company's relationship with the victim and/or submitter of the report of harm and how the victim and/or submitter of the report of harm came to be in possession of such allegedly confidential information;

(5) State how the release of the information would be likely to cause substantial harm to the company's competitive position; and

(6) State whether the person submitting the request for treatment as confidential information is authorized to make claims of confidentiality on behalf of the person or organization concerned.

(c) *Manner of submission.* Requests for designation of confidential information may be submitted in the same manner as manufacturer comments as described in § 1102.12(b). A request for designation of confidential treatment must be conspicuously marked.

(d) *Timing of submission.* In order to ensure that the allegedly confidential information is not placed in the database, a request for designation of confidential information must be received by the Commission in a timely manner prior to the 10th business day after the date on which the Commission transmits the report to the manufacturer or private labeler. If a request for confidential treatment is submitted in a timely fashion, the Commission will either make a determination on the claim prior to posting on the 10th business day after transmittal to the manufacturer or, as a matter of policy, redact the allegedly confidential information from a report of harm before publication in the Database until it makes a determination regarding confidential treatment.

(e) *Assistance with defense.* No request to redact confidential information from a report of harm pursuant to 5 U.S.C. 552(b)(4) should be made by any person who does not intend in good faith, and so certifies in writing, to assist the Commission in the defense of any judicial proceeding that thereafter might be brought to compel the disclosure of information that the Commission has determined to be a trade secret or privileged or confidential commercial or financial information.

(f) *Commission determination of confidentiality.* If the Commission determines that information in a report of harm is confidential, the Commission shall:

(1) Notify the manufacturer or private labeler;

(2) Redact such confidential information in the report of harm; and

(3) Publish the report of harm in the Database without such confidential information.

(g) *Commission determination of no confidentiality.* If the Commission determines that a report of harm does not contain confidential information, the Commission shall:

(1) Notify the manufacturer or private labeler; and

(2) Publish the report of harm, if not already published, in the Database.

(h) *Removal of confidential information.* As stated at 6A(c)(1)(C)(iii) of the CPSA, to seek removal of alleged confidential information that has been published in the Database, a manufacturer or private labeler may bring an action in the district court of the United States in the district in which the complainant resides, or has its principal place of business, or in the U.S. District Court for the District of Columbia.

§ 1102.26 Determination of materially inaccurate information.

(a) For purposes of this section, the following definitions apply:

(1) *Materially inaccurate information in a report of harm* means information that is false or misleading, and which is so substantial and important as to affect a reasonable consumer's decision making about the product, including:

(i) The identification of a consumer product;

(ii) The identification of a manufacturer or private labeler;

(iii) The harm or risk of harm related to use of the consumer product; or

(iv) The date, or approximate date on which the incident occurred.

(2) *Materially inaccurate information in a manufacturer comment* means information that is false or misleading, and which is so substantial and important as to affect a reasonable consumer's decision making about the product, including:

(i) The description of the consumer product;

(ii) The identity of the firm or firms responsible for the importation, manufacture, distribution, sale, or holding for sale of a consumer product;

(iii) The harm or risk of harm related to the use of a consumer product;

(iv) The status of a Commission, manufacturer, or private labeler investigation;

(v) Whether the manufacturer or private labeler is engaging in a corrective action and whether such action has not been approved by the Commission; or

(vi) Whether the manufacturer has taken, or promised to take, any other action with regard to the product.

(b) *Request for determination of materially inaccurate information.* Any person or entity reviewing a report of harm or manufacturer comment, either before or after publication in the Database, may request that the report of harm or manufacturer comment, or portions of such report of harm or manufacturer comment, be excluded from the Database or corrected by the Commission because it contains materially inaccurate information. Each requester seeking an exclusion or correction bears the burden of proof and must:

(1) State the unique identifier of the report of harm or manufacturer comment to which the request for a determination of materially inaccurate information pertains;

(2) Specifically identify the exact portion(s) of the report of harm or the manufacturer comment claimed to be materially inaccurate;

(3) State the basis for the allegation that such information is materially inaccurate;

(4) Provide evidence, which may include documents, statements, electronic mail, Internet links, photographs, or any other evidence, sufficient for the Commission to make a determination that the designated information is materially inaccurate;

(5) State what relief the requester is seeking: Exclusion of the entire report of harm or manufacturer comment; redaction of specific information; correction of specific information; or the addition of information to correct the material inaccuracy;

(6) State whether and how an alleged material inaccuracy may be corrected without removing or excluding an entire report of harm or manufacturer comment; and

(7) State whether the person submitting the allegation of material inaccuracy is authorized to make claims of material inaccuracy on behalf of the person or organization concerned.

(c) *Manner of submission*—

(1) *Length of request and expedited review.* The Commission strongly recommends requesters seeking an expedited review of claims of materially inaccurate information to limit the length of the request described in § 1102.26(b) to no more than five pages, including attachments, to allow for the expedited review of the request. Regardless of length, all submissions will be reviewed.

(2) *Manufacturers and private labelers.* A manufacturer or private labeler may request a Commission determination of materially inaccurate information related to a report of harm in the same manner as described in § 1102.12(b). Such requests should be conspicuously marked.

(3) *All other requests.* All other requests for a Commission determination of materially inaccurate information contained in a report of harm or manufacturer comment made by any other person or firm must be submitted to the CPSC using one of the methods listed below. The request seeking a Commission determination of materially inaccurate information may be made through:

(i) *Electronic mail.* By electronic mail directed to the Office of the Secretary at *info@cpsc.gov;* or

(ii) *Paper-based.* Written submission directed to the Office of the Secretary, Consumer Product Safety Commission, 4330 East West Highway, Bethesda, MD 20814–4408.

(d) *Timing of submission.* A request for a Commission determination regarding materially inaccurate information may be submitted at any time. If a request for determination of materially inaccurate information is submitted prior to publication of a report of harm in the Database, the Commission cannot withhold the report of harm from publication in the Database until it makes a determination. Absent a determination, the Commission will publish reports of harm on the tenth business day after transmitting a report of harm to the manufacturer or private labeler.

(e) *Assistance with defense.* No request for a determination of materially inaccurate information should be made by any person who does not intend in good faith, and so certifies in writing, to assist the Commission in the defense of any judicial proceeding that thereafter might be brought to compel the disclosure of information that the Commission has determined to be materially inaccurate information.

(f) *Notice.* The Commission shall notify the person or firm requesting a determination regarding materially inaccurate information of its determination and method of resolution after resolving such request.

(g) *Commission determination of material inaccuracy before publication.* If the Commission determines that information in a report of harm or manufacturer comment is materially inaccurate information before it is published in the Database, the Commission shall:

(1) Decline to add the materially inaccurate information to the Database;

(2) Correct the materially inaccurate information, and, if the minimum requirements for publication as set forth in §§ 1102.10(d) and 1102.12(c) are met, publish the report of harm or manufacturer comment in the Database; or

(3) Add information to the report of harm or the manufacturer comment to correct the materially inaccurate information, and, if the minimum requirements for publication as set forth in §§ 1102.10(d) and 1102.12(c) are met, publish the report of harm or manufacturer comment in the Database.

(h) *Commission determination of material inaccuracy after publication.* If the Commission determines, after an investigation, that the requested designated information in a report of harm or manufacturer comment contains materially inaccurate information after the report of harm or manufacturer comment has been published in the Database, the Commission shall, no later than seven business days after such determination:

(1) Remove the information determined to be materially inaccurate

from the Database, including any associated documents, photographs, or comments;

(2) Correct the information, and, if the minimum requirements for publication as set forth in §§ 1102.10(d) and 1102.12(c) are met, maintain the report of harm or manufacturer comment in the Database; or

(3) Add information to the report of harm or the manufacturer comment to correct the materially inaccurate information, and, if the minimum requirements for publication as set forth in §§ 1102.10(d) and 1102.12(c) are met, maintain the report of harm or manufacturer comment in the Database.

(i) *Commission discretion.*

(1) In exercising its discretion to remove, correct, or add information to correct materially inaccurate information contained in a report of harm or manufacturer comment, the Commission shall preserve the integrity of information received for publication in the Database whenever possible. Subject to §§ 1102.10(d) and 1102.12(c), the Commission shall favor correction, and the addition of information to correct, over exclusion of entire reports of harm and manufacturer comments, where possible.

(2) *Expedited determinations.* Where a manufacturer has filed a request for a correction or exclusion within the recommended page limit in § 1102.26(c)(1), the Commission shall attempt, where practicable, to make an expedited determination of a claim of material inaccuracy. Given the requirement of section 6A of the CPSA that reports of harm be published, the Commission will publish reports of harm on the tenth business day after transmitting a report of harm, where the Commission has been unable to make a determination regarding a claim of material inaccuracy prior to the statutorily mandated publication date. In such instances, the Commission will make any necessary correction, exclusion, or addition not later than seven business days after making a determination that there is materially inaccurate information in the report of harm. Manufacturer comments will be published at the same time as the report of harm is published, or as soon thereafter as practicable.

(j) *Commission determination of no material inaccuracy.* If the Commission determines that the requested information in a report of harm or manufacturer comment does not contain materially inaccurate information, the Commission will:

(1) Notify the requester of its determination; and

(2) Publish the report of harm or manufacturer comment, if not already published, in the Database if it meets the minimum requirements set forth in §§ 1102.10(d) and 1102.12(c).

(k) *Commission action in absence of request.* The Commission may review a report of harm or manufacturer comment for materially inaccurate information on its own initiative, following the same notice and procedural requirements set forth in paragraphs (g) through (j) of this section.

§ 1102.28 Publication of reports of harm.

(a) *Timing.* Subject to §§ 1102.10, 1102.24, and 1102.26, the Commission will publish reports of harm that meet the requirements for publication in the Database. The Commission will publish reports of harm as soon as practicable, but not later than the tenth business day after such report of harm is transmitted to the manufacturer or private labeler by the CPSC.

(b) *Exceptions.* The Commission may publish a report of harm that meets the requirements of § 1102.10(d) in the Database beyond the 10-business-day time frame set forth in paragraph (a) of this section if the Commission determines that a report of harm misidentifies or fails to identify all manufacturers or private labelers. Such information must be corrected through the procedures set forth in § 1102.26 for materially inaccurate information in a report of harm. Once a manufacturer or a private labeler has been identified correctly, the time frame set forth in paragraph (a) of this section shall apply.

§ 1102.30 Publication of manufacturer comments.

Timing. Subject to §§ 1102.12, 1102.24, and 1102.26, the Commission will publish in the Database manufacturer comments submitted in response to a report of harm that meet the minimum requirements set forth in § 1102.12(c). This publication will occur at the same time as the report of harm is published or as soon thereafter as practicable. An example of a circumstance that may make it impracticable to publish a manufacturer comment at the same time as a report of harm includes when the Commission did not receive the comment until on or after the publication date of the report of harm.

Subpart D—Notice and Disclosure Requirements

§ 1102.42 Disclaimers.

The Commission does not guarantee the accuracy, completeness, or adequacy of the contents of the Consumer Product Safety Information Database, particularly with respect to the accuracy, completeness, or adequacy of information submitted by persons outside of the CPSC. The Database will contain a notice to this effect that will be prominently and conspicuously displayed on the Database and on any documents that are printed from the Database.

§ 1102.44 Applicability of sections 6(a) and (b) of the CPSA.

(a) *Generally.* Sections 6(a) and 6(b) of the CPSA shall not apply to the submission, disclosure, and publication of information provided in a report of harm that meets the minimum requirements for publication in § 1102.10(d) in the Database.

(b) *Limitation on construction.* Section 1102.44(a) shall not be construed to exempt from the requirements of sections 6(a) and 6(b) of the CPSA information received by the Commission pursuant to:

(1) Section 15(b) of the CPSA; or

(2) Any other mandatory or voluntary reporting program established between a retailer, manufacturer, or private labeler and the Commission.

Dated: November 30, 2010.

Todd A. Stevenson,

Secretary, United States Consumer Product Safety Commission.

[FR Doc. 2010–30491 Filed 12–8–10; 8:45 am]

BILLING CODE 6355–01–P

Federal Register

Thursday,
December 9, 2010

Part IV

Department of Commerce

National Oceanic and Atmospheric Administration

50 CFR Part 622

Fisheries of the Caribbean, Gulf of Mexico, and South Atlantic; Snapper-Grouper Fishery Off the Southern Atlantic States; Amendment 17A; Emergency Rule To Delay Effectiveness of the Snapper-Grouper Area Closure; Final Rule and Temporary Rule

DEPARTMENT OF COMMERCE

National Oceanic and Atmospheric Administration

50 CFR Part 622

[Docket No. 0907271170–0576–03]

RIN 0648–AY10

Fisheries of the Caribbean, Gulf of Mexico, and South Atlantic; Snapper-Grouper Fishery Off the Southern Atlantic States; Amendment 17A

AGENCY: National Marine Fisheries Service (NMFS), National Oceanic and Atmospheric Administration (NOAA), Commerce.

ACTION: Final rule.

SUMMARY: NMFS issues this final rule to implement Amendment 17A to the Fishery Management Plan for the Snapper-Grouper Fishery of the South Atlantic Region (FMP), as prepared and submitted by the South Atlantic Fishery Management Council (Council). This final rule establishes an annual catch limit (ACL) of zero for red snapper, which means all harvest and possession of red snapper in or from the South Atlantic exclusive economic zone (EEZ) is prohibited, and for a vessel with a Federal commercial or charter vessel/headboat permit for South Atlantic snapper-grouper, harvest and possession of red snapper is prohibited in or from State or Federal waters. This rule also implements an area closure for South Atlantic snapper-grouper that extends from southern Georgia to northern Florida where harvest and possession of all snapper-grouper species is prohibited (except when fishing with black sea bass pots or spearfishing gear for species other than red snapper), and requires the use of non-stainless steel circle hooks when fishing for snapper-grouper species with hook and line gear north of 28° N. latitude in the South Atlantic EEZ. Additionally, Amendment 17A establishes a rebuilding plan for red snapper and requires a monitoring program as the accountability measure (AM) for red snapper. The intended effects of this rule are to end overfishing of South Atlantic red snapper and rebuild the stock.

DATES: This rule is effective December 3, 2010, except for the amendments to § 622.35, which are effective January 3, 2011, and the amendments to § 622.41, which are effective March 3, 2011.

ADDRESSES: Copies of the Final Environmental Impact Statement (FEIS), Final Regulatory Flexibility Analysis (FRFA), and Record of Decision (ROD) may be obtained from Kate Michie, Southeast Regional Office, NMFS, 263 13th Avenue South, St. Petersburg, FL 33701: telephone 727–824–5305; fax 727–824–5308.

FOR FURTHER INFORMATION CONTACT: Kate Michie, *telephone:* 727–824–5305; *fax:* 727–824–5308; *e-mail: Kate.Michie@noaa.gov.*

SUPPLEMENTARY INFORMATION: The South Atlantic snapper-grouper fishery is managed under the FMP. The FMP was prepared by the Council and implemented by NMFS under the authority of the Magnuson-Stevens Fishery Conservation and Management Act (Magnuson-Stevens Act) by regulations at 50 CFR part 622.

Background

On July 29, 2010, NMFS published a notice of availability for Amendment 17A and requested public comment (75 FR 44753). On August 13, 2010, NMFS published the proposed rule to implement Amendment 17A and requested public comment (75 FR 49447). NMFS approved Amendment 17A on October 27, 2010. The rationale for the measures contained in Amendment 17A is provided in the amendment and in the preamble to the proposed rule and is not repeated here.

Effectiveness of Management Measures

Prohibition on Harvest and Possession of Red Snapper

The prohibition on the harvest and possession of red snapper in the South Atlantic EEZ, and in State or Federal waters for a person on board a vessel for which a valid Federal commercial or charter vessel/headboat permit for South Atlantic snapper-grouper has been issued, and the prohibition on the sale or purchase of red snapper harvested from or possessed in the South Atlantic (including State and Federal waters) for a vessel for which a valid Federal commercial permit for South Atlantic snapper-grouper has been issued, will be effective December 3, 2010.

The interim rule implementing these red snapper prohibitions will expire on December 5, 2010. Therefore, to prevent a lapse in these prohibitions, these measures must become effective on or before December 5, 2010.

A red snapper benchmark assessment was completed through the Southeast Data, Assessment, and Review (SEDAR) process in late October 2010, which provides additional information on the effectiveness of these prohibitions. A final report of the assessment was published on October 25, 2010, and is available at *http://www.sefsc.noaa.gov/sedar/download/SEDAR%2024_SAR_October%202010_26.pdf?id=DOCUMENT.* The assessment indicates that red snapper are overfished and undergoing overfishing and that the current harvest prohibition for red snapper is providing substantial protection to the stock. A lapse could also lead to more severe harvest reductions for the snapper-grouper fishery as a whole with associated adverse socioeconomic impacts.

Snapper-Grouper Area Closure

The new benchmark assessment (SEDAR 24) has recently been completed for red snapper and has been reviewed by the Council's Scientific and Statistical Committee (SSC) and will be considered by the Council at their meeting in December 2010. The assessment has determined that red snapper are overfished and experiencing overfishing, but the stock is in better condition than indicated by the previous assessment (SEDAR 15) with the magnitude of overfishing less than what was indicated in the previous assessment. Results of the new assessment suggest less restrictive management measures, such as a smaller area closure, would be adequate to end overfishing of red snapper. Therefore, NMFS is considering using the emergency action authority under section 305(c) of the Magnuson-Stevens Act to address the implications of the new assessment and to provide the Council time to determine whether modifications should be made to the red snapper management measures based upon the results of SEDAR 24, if appropriate.

Circle Hooks

NMFS is delaying the requirement in § 622.41(n) to use non-stainless steel circle hooks when fishing for South Atlantic snapper-grouper with hook-and-line gear and natural baits north of 28° N. latitude for 3 months. The circle hook requirement will be effective March 3, 2011. This delay in effectiveness will provide additional time for manufacturers and retail outlets to prepare for the demand for these newly required products and will provide time for commercial and recreational fishers to comply with these new gear requirements.

Comments and Responses

NMFS received 138 comments on Amendment 17A and the proposed rule, including 1 comment from a State agency, 1 comment from a Federal agency, 1 petition signed by 45 individuals, 5 letters from non-governmental organizations, one of which was endorsed by 30,388

individuals who support approval of Amendment 17A, and 130 comments from individuals (including 41 copies of an identical postcard from an Amendment 17A opposition postcard campaign). Of these comments, 111 expressed opposition to Amendment 17A, 24 expressed support, and 3 comments were unrelated to Amendment 17A actions. Specific comments relevant to the actions contained in the amendment and the rule as well as NMFS' respective responses, are summarized below.

Comment 1: The Environmental Protection Agency (EPA) and 4 non-governmental organizations are concerned that the rebuilding schedule favors fishermen to the maximum extent, rather than balancing benefits to the resource and socioeconomic impacts on the fishing community. The EPA suggests that fishing pressure from fisheries for species that co-occur with red snapper should be reduced in order to reduce red snapper bycatch, and red snapper bycatch should be kept as landings and counted towards the co-occurring species' fishery quotas. Additionally, the EPA suggests that adaptive management measures should be applied over the recovery period; however, such adaptive management measures should balance impacts on the fishing community and on the resource.

Response: Thirty-five years is the maximum rebuilding schedule recommended for South Atlantic red snapper based on the Magnuson-Stevens Act National Standard 1 Guidelines and is consistent with the Magnuson-Stevens Act mandate to rebuild the fishery as quickly as possible, taking into account the status and biology of the stock, the needs of fishing communities, and other factors. The Council chose this schedule recognizing that based on the information provided to them from SEDAR 15, a total red snapper harvest prohibition alone was not sufficiently restrictive to end overfishing and that shorter rebuilding schedules would require impractical reductions in red snapper bycatch.

NMFS acknowledges the cumulative effects of the Amendment 17A proposed regulations, recent fisheries regulations, and other circumstances other than regulations (rise in fuel costs, decrease in dock space, national economic recession leading to a decrease in for-hire trips, *etc.*) will likely have negative economic and social effects on snapper-grouper fishermen. By choosing the 35-year rebuilding schedule, negative socioeconomic impacts will be minimized to the extent practicable while still achieving conservation objectives, consistent with the Magnuson-Stevens Act.

The shortest possible rebuilding schedule (15 years) would require most or all of the EEZ and State waters be closed to fishing over the 15-year period to eliminate all incidental mortality of red snapper. The significant and irreversible socioeconomic impacts of such an action makes a 15-year rebuilding schedule impractical. While the 25-year schedule evaluated in the amendment would have less adverse socioeconomic effects when compared to a 15-year rebuilding plan, such effects are not warranted by the limited biological benefits of achieving the rebuilding goal just 10 years earlier than under the 35-year rebuilding schedule.

It is not possible to implement a shorter rebuilding schedule without significantly increasing the magnitude of negative socioeconomic impacts. Because red snapper are widely distributed and co-occur with other snapper-grouper species, even slight increases in the rate at which the red snapper stock rebuilds greatly increases the need for more restrictive management measures. Economic analyses indicate it is unlikely that the future benefits of rebuilding the red snapper stock more quickly would outweigh the short-term costs associated with the more restrictive regulations required by shorter rebuilding schedules.

The Council is exploring, through Amendment 22 to the Snapper-Grouper FMP, alternative strategies for managing red snapper catch and bycatch as the stock rebuilds, which could include a bycatch retention policy if that is determined to be a feasible option.

Comment 2: Two commenters expressed support for the exemption to fish with black sea bass pots within the snapper-grouper closed area. One commenter expressed opposition to this exemption. The EPA questioned how "ghost fishing" with black sea bass pots was addressed in the Council's decision to allow the use of black sea bass pots within the closed area.

Response: The majority of the black sea bass component of the snapper-grouper fishery is north of the closed area, and only a small percentage of red snapper are taken in black sea bass pots. Therefore, the Council determined this gear type was sufficiently selective so that it may be deployed within the closed area without adversely affecting the rebuilding efforts of red snapper. Allowing this gear also helps to offset, to some degree, some of the negative socioeconomic impacts expected from the area closure.

During its March 2010 meeting, after the draft environmental impact statement (DEIS) was filed with the EPA for publication in the **Federal Register**, the Council chose not to exempt the use of black sea bass pots within the closed area, citing concerns about the "ghost fishing" that takes place in lost pots and the potential interactions with protected species. However, at its June 2010 meeting, the Council modified its decision to allow the use of black sea bass pots, because they are a highly selective gear type that could be used to fish for species other than red snapper within the closed area without affecting red snapper rebuilding. Additionally, the Council is developing Amendment 18A to the FMP, which includes actions to limit the number of black sea bass pots allowed per vessel, thereby limiting participation in the black sea bass component of the snapper-grouper fishery, and requires pots to be returned to port at the completion of a fishing trip. If approved, these controls should limit effort shift into the black sea bass component of the snapper-grouper fishery, minimizing the occurrence of black sea bass pot "ghost fishing" on snapper-grouper species, and interactions with protected species.

Comment 3: Two commenters expressed support for the exemption to use spearfishing gear within the snapper-grouper closed area when fishing for species other than red snapper. One commenter expressed opposition to this exemption. The EPA expressed concerns with the exemption related to potential collection of undersized fish, exceeding quotas, and spearfishing injury.

Response: Overall, spearfishing gear is considered a highly selective gear type that is least likely to produce red snapper bycatch or bycatch mortality, and it is the most selective gear type available if the user is well-versed in species identification. Therefore, the use of spearfishing gear within the closed area for species other than red snapper is unlikely to adversely affect red snapper rebuilding efforts, while helping to offset, to a small degree, some of the negative socioeconomic impacts expected from the area closure.

Amendment 17A analyses conclude that spearfishing does have the potential to remove greater biomass of reef fish than rod and reel fishing. Spearfishing has been shown to result in the removal of larger fish from the population than with rod and reel. According to the biological impact analysis in Amendment 17A, removing larger fish from a population can have a negative effect on overall ecosystem health by altering the composition of the natural

communities; however, any such effect is expected to be more than offset by the conservation benefits derived from the hook-and-line gear prohibition within the area closure. If the use of spearfishing gear increases as a result of this exemption, it may be reasonable to assume incidences of spear-related injuries may also increase. However, the Council determined the potential negative impacts of allowing the use of spearfishing gear did not outweigh the potential offset of negative socioeconomic impacts that may result from the area closure.

Comment 4: Eighteen commenters expressed support for the requirement to use non-stainless steel circle hooks north of 28° N. latitude with live bait. Three commenters expressed opposition to the circle hook requirement, citing that it would inhibit effective harvest of certain species and would incur a significant economic burden. The EPA expressed support of the requirement, but stated that regulatory discard mortalities are often related to barotrauma caused by rapid surfacing rather than hooking injuries, and certain species such as yellowtail snapper and mangrove snapper are not readily caught with circle hooks.

Response: Many studies indicate that hooking injuries are a major source of mortality in red snapper. Requiring circle hooks in the area of the South Atlantic EEZ north of 28° N. latitude may help reduce discard mortality of red snapper where they are most abundant, although the exact amount is not quantifiable at this time. However, the Council concluded that taking advantage of any reasonable method to reduce red snapper bycatch mortality is warranted considering its overfished condition.

Barotrauma is also cited as a significant cause of bycatch mortality for red snapper. NMFS previously considered a Council-approved measure to use venting tools for snapper-grouper species to reduce bycatch mortality caused by barotraumas in Amendment 16 to the FMP. The measure requiring the use of venting tools was disapproved based on data indicating the benefits of venting are not clear for all species, including red snapper, and venting could potentially cause harm in some cases. NMFS determined that additional guidance is needed to identify species that would benefit from venting to ensure the maximum benefit is provided to these species. If future research on the use of venting tools, and/or any other barotrauma mitigation methods, indicate red snapper would benefit from the required use of such tools or techniques, the Council has the option to consider the issue again in a future FMP amendment.

During the development of Amendment 17A, some constituents expressed concern that circle hooks would preclude them from being able to catch some specific fish species including yellowtail snapper and mangrove snapper due to the physical structure of a fish's mouth and the way the fish takes bait. The majority of the species of concern are landed south of 28° N. latitude where red snapper are less abundant; therefore, the Council chose to limit the circle hook requirement to areas north of 28° N. latitude.

Comment 5: The EPA supported fishery-independent monitoring for red snapper, as well as fishery-dependent monitoring where fishermen work together with researchers.

Response: The Council chose to require implementation of a fishery-independent monitoring program for red snapper to augment and expand the existing fishery-independent data program for snapper-grouper because fishery-independent data can be less variable and more verifiable than fishery-dependent data. The choice to utilize a fishery-independent monitoring program for red snapper does not in any way infer that fishery-dependent data collection programs may not be used for monitoring red snapper in the South Atlantic. The AM chosen by the Council and approved by NMFS includes a fishery-dependent data gathering component that will be used to monitor catch per unit effort (CPUE) throughout the rebuilding process. Furthermore, it is likely that in the future, some research and monitoring efforts may be designed to include hybrid sampling programs that use both fishery-independent and fishery-dependent data gathering methods.

Comment 6: If the approved rebuilding schedule is not adequate in minimizing socioeconomic impacts, the EPA recommended additional offsets be considered by NMFS and the Council for fishery participants of all demographics, particularly any affected minority and low-income fishermen.

Response: Amendment 17A contains a detailed analysis of potential socioeconomic impacts of the actions to end overfishing of red snapper and rebuild the stock to a sustainable level. The Council has chosen, and NMFS has approved, alternatives intended to minimize, to the extent practicable, adverse socioeconomic impacts as required under the Magnuson-Stevens Act. A Fishery Impact Statement (FIS) and a Social Impact Analysis (SIA) were completed as part of the Amendment 17A development process. The SIA included an analysis of potential impacts of this rule on low-income and minority groups. The full FIS and SIA can be found in Appendix U of Amendment 17A. The alternatives chosen are also projected to effectively end overfishing of South Atlantic red snapper and rebuild the population within the designated rebuilding timeframe.

A new benchmark assessment for red snapper conducted through the SEDAR process (SEDAR 24; 2010) indicates the stock is undergoing overfishing and is overfished to lesser degrees than estimated in the previous SEDAR assessment (SEDAR 15) and in Amendment 17A. Therefore, additional action may be appropriate to further minimize the unavoidable adverse economic impacts of ending overfishing and rebuilding the stock. The Council will review the results of SEDAR 24 at their December 2010 meeting and may propose additional actions at that time, as appropriate.

Comment 7: The EPA and one individual requested a discussion of potential impacts of the Deepwater Horizon/BP oil spill event on red snapper and the fishing community.

Response: Thus far, there has been no indication that oil from the Deepwater Horizon/BP oil spill, which occurred on April 20, 2010, has made its way into South Atlantic waters. The spill remained concentrated in the northern Gulf of Mexico before it was capped and is no longer considered a significant threat for dispersing oil. Therefore, implementation of Amendment 17A is not expected to be impacted by oil spill-related events that have transpired in the Gulf of Mexico over the past 7 months.

Comment 8: Seventeen commenters specifically oppose the prohibition on harvest and possession of red snapper in the South Atlantic EEZ and in State waters for vessels holding Federal snapper-grouper permits. Five commenters specifically support the prohibition on red snapper harvest.

Response: The 2008 red snapper SEDAR stock assessment (SEDAR 15) concluded that red snapper are overfished and undergoing overfishing. When a determination is made that a stock is experiencing overfishing or is overfished, the Magnuson-Stevens Act requires NMFS and the Council to develop a plan to end overfishing and rebuild the stock. The prohibition on red snapper harvest and possession implemented through Amendment 17A is required to meet this statutory mandate. SEDAR 15 indicates a harvest

prohibition in State and Federal waters alone is not capable of ending overfishing because many red snapper taken incidentally when harvesting other snapper-grouper species do not survive capture and release. For this reason, NMFS also is approving the Council's proposal to establish an area closure within which all harvest and possession of snapper-grouper is prohibited (except when fishing with black sea bass pots or spearfishing gear for species other than red snapper). These management measures are expected to end overfishing as required by the Magnuson-Stevens Act.

Comment 9: Twenty-two commenters specifically oppose the snapper-grouper area closure, and three commenters support it.

Response: Based on the results of the SEDAR 15 benchmark assessment, prohibiting the harvest of red snapper alone will not end overfishing because red snapper are often incidentally captured and discarded while fishermen are targeting co-occurring species. Additionally, the release mortality of red snapper is very high. Therefore, to sufficiently reduce the overall mortality of red snapper enough to end overfishing and rebuild the stock, NMFS approved a prohibition on all harvest and possession of red snapper in the South Atlantic EEZ and also approved an area closure within which harvest and possession of all snapper-grouper species is prohibited except when using spearfishing gear or black sea bass pots to fish for species other than red snapper.

The area closure alternative proposed by the Council and approved by NMFS encompasses an area where large amounts of red snapper are harvested. Furthermore, the preferred area closure minimized to the extent practicable the unavoidable adverse economic impacts of ending overfishing as required by the Magnuson-Stevens Act. Amendment 17A also includes an action to require a fishery-independent monitoring program to track the progress of rebuilding efforts, in order to reduce the size of the area closure and allow the harvest of red snapper as the stock rebuilds.

A new benchmark assessment just completed for red snapper, SEDAR 24, indicates the stock is undergoing overfishing and is overfished to a lesser degree than estimated in SEDAR 15. Therefore, additional action may be appropriate to further minimize the unavoidable adverse economic impacts of ending overfishing and rebuilding the stock. The Council will review the results of SEDAR 24 at their December 2010 meeting and may propose additional actions at that time, as appropriate.

Comment 10: Two commenters stated the proposed area closure could push effort inshore or offshore and thus negatively impact juvenile populations of red snapper and other coastal fisheries, and/or deepwater snapper-grouper species.

Response: The extent to which effort may shift as a result of the proposed area closure is not known so it is not possible to quantify the impact of such a shift on snapper-grouper species. However, any such effort shift is not expected to have a significant adverse impact on red snapper rebuilding or on the status of other deepwater snapper-grouper species. The red snapper harvest prohibition is expected to reduce the handling time of red snapper, as fishermen will no longer need to measure fish to determine if they are of legal size. If fishing effort moves closer to shore, then it is expected that the survival of discarded red snapper and other snapper-grouper species would be greater than for fish discarded in deeper water because depth-related discard mortality would be less in shallow water. The model used to develop the closed area alternatives was designed to account for reduced inshore release mortality in the closed area as well as in all areas around the closure.

Effort shifts into water deeper than the closed area may be mitigated by the deepwater snapper-grouper closure that is proposed in Amendment 17B to the FMP. (Amendment 17B and proposed implementing regulations are available for public comment through November 22, 2010, and November 26, 2010, respectively.) This proposed deepwater closure would prohibit harvest of six deepwater snapper-grouper species beyond a depth of 240 ft (73 m), which is also the seaward boundary of the Amendment 17A area closure. These species include snowy grouper, blueline tilefish, yellowedge grouper, misty grouper, queen snapper, and silk snapper. In addition to prohibiting harvest and possession of the previously mentioned species, Amendment 17B also prohibits the possession and harvest of speckled hind and warsaw grouper. If Amendment 17B is approved and implemented, prohibiting the harvest and possession of these species beyond a depth of 240 ft (73 m) greatly diminishes the incentive to fish for deepwater snapper-grouper.

Comment 11: One commenter expressed concern regarding a potential influx of imported seafood as a result of the red snapper harvest restrictions.

Response: The prohibition on the harvest and possession of red snapper and the closure of certain areas in the South Atlantic to snapper-grouper fishing under Amendment 17A are estimated to result in an annual reduction of approximately 213,000 lb (96,615 kg) of commercially harvested snapper-grouper, of which about 120,000 lb (54,431 kg) are red snapper, based on expected harvest resulting from regulations implemented through Amendment 16 to the FMP. Total imports of snappers and groupers into the U.S. have been increasing and averaged approximately 48,000,000 lb (21,772,434 kg) between 2003 and 2007. Within this aggregate weight of snapper-grouper imports, the amount of red snapper imported into the U.S. cannot be estimated with the current available information. It is recognized that fish dealers, restaurants, and other establishments may substitute imports for snappers and groupers harvested in U.S. waters as a result of the prohibition on the harvest and possession of red snapper and the area closure. However, the reduction in the domestic landings of snapper-grouper is not expected to trigger an influx of imported snappers and groupers, because the amount of such reduction is small relative to the amount of imported snappers and groupers (about 0.44 percent of imports).

Comment 12: Thirty-one commenters opposed the red snapper management measures in Amendment 17A based on potential adverse economic impacts. Several of these commenters are concerned there is an inadequate economic analysis of the impacts on the recreational fishing community in the amendment.

Response: Amendment 17A and associated final environmental impact statement, regulatory flexibility act analysis, regulatory impact review, and social impact assessment/fishery impact statement thoroughly analyze the potential economic impacts of the Council's proposed red snapper management measures, based on the best scientific information available. The Magnuson-Stevens Act requires the Council and NMFS to end the overfishing of red snapper. SEDAR 15 indicates the stock is being fished at five times the sustainable rate, and that significant reductions in mortality, 76 percent, are needed to end overfishing and rebuild the population. The adverse short-term economic impacts of such reductions are unavoidable. However, SEDAR assessments indicate the stock is producing only a fraction of its potential yield and that the long-term economic benefits of stock rebuilding are expected

to be substantial. A framework amendment is being developed to allow for adjustments to the closed area, as appropriate, based on the results of a new benchmark assessment (SEDAR 24). Additionally, draft Amendment 22 to the FMP will explore new approaches for managing red snapper catch and bycatch as the stock rebuilds that may allow the Council to provide for some level of red snapper harvest over time.

Comment 13: Eighty-two commenters stated the data used in determining the magnitude of red snapper overfishing, and general population estimates, are flawed. Several of the same commenters also questioned the adequacy and reliability of recreational landings data currently available to fishery managers.

Response: Amendment 17A is based upon the SEDAR 15 assessment, and the assessment was completed in 2008 using data through 2006. SEDAR 15 found the South Atlantic red snapper stock is overfished and undergoing overfishing.

Data used for the assessment consists of records of commercial catches provided by dealer and fishermen reports since the 1940s, headboat fishery catch records from the Southeast Headboat Survey since 1972, and recreational catch records from the Marine Recreational Fisheries Statistics Survey (MRFSS) since 1981. MRFSS conducts telephone surveys of coastal households and for-hire businesses, as well as in-person access-point angler intercept surveys. These surveys are used to collect information on recreational fishery participation, fishing effort, and catch, in addition to demographic, social, and economic characteristics of the participants. NMFS recognizes that MRFSS data are highly uncertain for infrequently encountered species and is working with recreational and for-hire fishermen to explore novel approaches to address this issue through the Marine Recreational Information Program (MRIP). SEDAR 15 also includes U.S. Fish and Wildlife Service recreational fisheries survey data from 1960, 1965, and 1970. Landings and effort information are provided by dealer and fishermen reports and surveys. Information on catch lengths and ages is provided by fishing port sampling programs that support the catch statistics programs. Information on biological characteristics, such as age, growth, and reproduction, is provided by various research studies. All of the data used in the assessment are described in the SEDAR 15 red snapper stock assessment report available on the SEDAR Web site at *http://www.sefsc.noaa.gov/sedar/*. The SEDAR Web site also provides extensive supporting documentation that describes data collection programs and research findings.

SEDAR is a cooperative process initiated in 2002 to improve the quality and reliability of fishery stock assessments in the South Atlantic, Gulf of Mexico, and U.S. Caribbean. SEDAR is managed by the Caribbean, Gulf of Mexico, and South Atlantic Regional Fishery Management Councils in coordination with NMFS and the Atlantic and Gulf States Marine Fisheries Commissions. SEDAR seeks improvements in the scientific quality of stock assessments and greater relevance of information available to address existing and emerging fishery management issues. SEDAR emphasizes constituent and stakeholder participation in assessment development, transparency in the assessment process, and a rigorous and independent scientific review of completed stock assessments. SEDAR is organized around three workshops. The first is a data workshop where data sets are documented, analyzed, and reviewed and data for conducting assessment analyses are compiled. The second is an assessment workshop where quantitative population analyses are developed and refined and population parameters are estimated. The third is a review workshop where a panel of independent experts reviews the data and assessment and recommends the most appropriate values of critical population and management quantities. All SEDAR workshops are open to the public. Public testimony is accepted in accordance with each fishery management council's standard operating procedures. Workshop times and locations are noticed in advance through the **Federal Register**.

The findings and conclusions of each SEDAR workshop are documented in a series of reports, which are ultimately reviewed and discussed by the appropriate Council and its SSC. At its June 2008 meeting, the Council's SSC determined that the SEDAR 15 is based upon the best available science. In July 2010, NMFS' Southeast Fisheries Science Center (SEFSC) certified the conservation and management measures in Amendment 17A are based upon the best scientific information available.

SEDAR 15 is controversial with fishermen who feel the findings contradict their experience of encountering more and larger red snapper in recent years. Landings and discard data corroborate fisher reports that catches increased between 2007 and 2009. A spike in 2007 discards and 2008–2009 landings is likely due to a strong year class, which occurred in 2006. Even so, the age structure of the red snapper population is severely truncated (there are not enough older fish). Red snapper live to at least 54 years of age, but the SEDAR 15 indicates that most red snapper are less than 10 years old.

The SEFSC evaluated the concerns raised by fishermen regarding SEDAR 15 and subsequent analyses. The SEFSC concluded that altering model assumptions based on fishermen's concerns would impact the magnitude of required harvest reductions but would not change the assessment conclusions regarding the status of red snapper. Overfishing is occurring and must be addressed within the requirements of the Magnuson-Stevens Act.

A new red snapper SEDAR stock assessment (SEDAR 24) was completed in late October 2010, and evaluated more recent catch data than that used in SEDAR 15. The results of SEDAR 24 also support the SEDAR 15 conclusion that red snapper is overfished and experiencing overfishing, although the rate of overfishing may be lower than the rate from SEDAR 15. The Council's SSC reviewed SEDAR 24 and the Council will review SEDAR 24 and the SSC's recommendations at their next meeting during the week of December 5, 2010. The Council is poised to take action at that time to make any needed adjustments to the area closure as appropriate.

Comment 14: Two commenters, including the State of Florida, felt actions related to limiting the harvest of red snapper should be postponed until the 2010 benchmark assessment is completed.

Response: The Council is scheduled to receive the results of the 2010 SEDAR benchmark stock assessment for red snapper (SEDAR 24) at the December 2010 Council meeting. However, red snapper continue to be overfished and undergoing overfishing and the prohibition on the harvest and possession of red snapper must be effective by December 5, 2010, to avoid a lapse in those prohibitions implemented through the interim rule. Additionally, implementation of Amendment 17A cannot be further delayed based on the Magnuson-Stevens Act requirements to prepare and implement an FMP amendment to end overfishing and implement conservation and management measures to rebuild red snapper. SEDAR 24 findings support the current prohibitions on the harvest and possession of red snapper, and indicate a lapse in these prohibitions

could lead to more severe harvest reductions for the snapper-grouper fishery as a whole with associated adverse socioeconomic impacts. The assessment also indicates the snapper-grouper area closure included in Amendment 17A is larger than necessary to end overfishing and rebuild the stock, and NMFS is considering using the emergency action authority under section 305(c) of the Magnuson-Stevens Act to address the implications of the new assessment, as appropriate, and to provide the Council time to determine whether modifications should be made to the area closure based upon the new assessment. The Council will consider the SEDAR 24 results at their December 2010 meeting, and determine whether or not a modification to the area closure is warranted. If so, adjustments to the area closure will be promulgated through a regulatory amendment.

Comment 15: One commenter attributed red snapper overfishing to the shrimp trawl fisheries off the southeast United States and recommended a 2-year ban on shrimp trawling in the South Atlantic.

Response: No evidence exists that shrimp trawl fleets in the South Atlantic EEZ capture juvenile red snapper. Confusion about shrimp bycatch likely results from evidence that the fishery for penaeid shrimp (pink, white, and brown shrimp), in the Gulf of Mexico, catches a high level of juvenile red snapper. However, no evidence exists that the penaeid shrimp fishery in the South Atlantic has the same level of red snapper bycatch. In fact, the Southeast Area Monitoring and Assessment Program—South Atlantic Coastal Survey has not documented any red snapper caught during shallow-water trawl studies since 2007, and no more than two red snapper in any year during 1995–2007.

Comment 16: Four commenters stated the commercial sector is responsible for the current overfished and overfishing status of red snapper and expressed support for banning commercial red snapper fishing, while allowing recreational red snapper fishing to continue.

Response: SEDAR 15 and SEDAR 24 indicate that red snapper is overfished and experiencing overfishing. The commercial sector is responsible for approximately 20 to 25 percent of the total red snapper landings in the South Atlantic based on data collected since 2006; thus, the number of red snapper taken by the recreational sector far exceeds the amount taken by the commercial sector. Therefore, overfishing would continue if management measures were only applied to the commercial sector. The measures implemented through this final rule must apply to both the commercial and recreational sectors to effectively end the overfishing of red snapper.

Comment 17: One commenter stated they do not typically see red snapper when fishing off the east coast of Florida.

Response: Amendment 17A and its implementing regulations were developed based upon the SEDAR 15 (2008) assessment, which shows that red snapper are overfished and undergoing overfishing. The stock assessment also indicates red snapper abundance is significantly lower now than it has been in previous decades. Most of the stock is currently concentrated in areas off of northern Florida and southern Georgia. Overfishing of the species has possibly diminished the range of the species and has led to decreased encounter rates in areas where red snapper once may have been plentiful, including the Florida Keys. This final rule is intended to end the overfishing of red snapper and rebuild the stock to sustainable levels.

Comment 18: Twelve commenters offered several alternative management methods for red snapper including bag limits, trip limits, reduced size limits, slot sizes, seasonal area closures, spawning season closures, artificial reef establishment, venting tool requirements, circle hooks with wire appendages, state-by-state quotas, and a voluntary buy-out program.

Response: Amendment 4 to the FMP (1991), implemented a 20-inch (50.8 cm) total length (TL) minimum size limit and a 2-fish red snapper bag limit within a 10-fish snapper-grouper aggregate bag limit in an effort to reduce harvest of red snapper. Unfortunately the implementation of a size limit and bag limit was not enough to end the overfishing of red snapper at the time, and overfishing continued despite the implementation of a limited access program for the commercial snapper-grouper fishery via Amendment 8 to the FMP (1998).

In developing red snapper management measures in Amendment 17A, the Council considered an option to allow red snapper harvest based on a quota for the commercial sector, a quota for the for-hire sector (utilizing electronic logbooks), and a quota for the private recreational sector (based on a quota tag system administered by the states), with dead discards inshore of 98 ft (73 m) to be subtracted from the overall allowable harvest level before quotas are established. The suggested AM for this alternative stated that once the catch limits are reached in Georgia, South Carolina, and Florida, bottom fishing would be prohibited beyond 98 ft (73 m). However, based on catch rates of landed and discarded red snapper in 2007 and 2008, the allowable catch for each sector would be estimated to be met in less than one month.

Furthermore, allowing the level of harvest outlined above would require extensive observer coverage, implementation of electronic logbooks, and establishment of a tagging system. Not all states possess the administrative resources needed to implement a tagging program at this time. Discarded red snapper would require close tracking, and harvest and release-mortality rates would need to be applied to the discards to ensure total removals allocated to states and sectors are not exceeded. The SSC has strongly opposed tracking discards as a means of monitoring fishery catch levels and depending on self-reported discards may create a disincentive to report, if the fishery closes as a result of these self-reported data. However, the Council is exploring through draft Amendment 22 to the Snapper-Grouper FMP, alternative strategies for managing red snapper catch and bycatch (including a fish tag program) that may allow the Council to provide for some level of red snapper harvest over time as the stock rebuilds.

Several commenters suggested reducing the minimum size limit from 20 inches (50.8 cm) TL to 16 inches (40.6 cm) TL, establishing a slot limit or eliminating the size limit altogether. These minimum size limit modifications were considered by the Council but were removed from detailed analysis and moved to the considered but rejected portion of the amendment because they would not end overfishing. Reduction or elimination of a minimum size limit could increase the magnitude of total removals because a greater number of fishermen would be able to fill the 2-fish bag limit with fish that formerly were discarded and survived the trauma of capture.

Reductions in the bag limits were also considered by the Council and NMFS. Reduction in the bag limit to 1 fish per person (resulting in a 5-percent reduction in harvest with a 40-percent release mortality rate) or a vessel limit of 4 fish per vessel per day (resulting in a 3-percent reduction for private recreational vessels and a 34-percent reduction for headboats) would not be sufficient to end overfishing based on the results of SEDAR 15.

Another option discussed by the Council was a seasonal-area closure for

all snapper-grouper species with a total prohibition on harvest and possession of red snapper. A seasonal area closure for all snapper-grouper species may be effective in reducing bycatch mortality of red snapper for the duration of the closure; however, bycatch mortality would be expected to resume during the open season. Based on the results from SEDAR 15, a very large seasonal snapper-grouper area closure would be required to end red snapper overfishing, and thus would incur greater negative socioeconomic impacts than the current area closure in Amendment 17A. Moreover, the longer the open season, the larger the closed area would need to be to account for increased bycatch mortality of red snapper. Because of these factors, the Council did not consider seasonal area closures a feasible option for ending overfishing in this case. This does not, however, preclude the future use of seasonal-area closures as a management measure.

Suggestions concerning the establishment of more artificial reefs have been made several times throughout the amendment's development process. Some studies suggest that artificial reefs increase populations of red snapper while others suggest artificial reefs attract fish in general. As artificial reefs are usually well marked, the stock could be negatively impacted by making large concentrations of red snapper more accessible to fishermen. Regardless, the reduction needed to end overfishing and rebuild red snapper would not be achieved by creating more artificial reefs as the only management measure.

Requiring the use of venting tools was previously considered in Amendment 16 to the FMP. This requirement was disapproved based on public comments and new information opposing the use of venting tools, along with scientific studies that suggest the use of venting tools may actually increase mortality of some species depending on capture depth. Furthermore, the requirement for the possession and use of venting tools was determined to be overly broad and not in accordance with the administrative record developed for Amendment 16. Required use of venting tools in the snapper-grouper fishery may be considered again in the future if guidance is provided on the tools that should be used, the appropriate techniques for venting, and the species that benefit most from venting. NOAA is funding a collaborative workshop to be hosted by the Atlantic States Marine Fisheries Commission in spring 2011 to examine how best to reduce barotrauma in recreational fisheries.

One commenter recommended the use of circle hooks with a wire appendage be required for the snapper-grouper fishery. Appendaged circle hooks were discussed in the biological analysis for the circle hook action in Amendment 17A. The analysis cites one study that compared circle hooks and J-hooks with and without wire appendages and their effects on reducing the catch of small and gut-hooked snapper by recreational fishers in the Hauraki Gulf of New Zealand. However, the Council and NMFS did not choose to pursue a requirement for appendaged hooks until additional information on their use and effectiveness becomes available. A circle hook workshop will be held May 4–6, 2011, in Miami, Florida, and more information on this workshop may be found at: *http://www.circlehooksymposium.org/.* NMFS' approval of the requirement to use non-stainless steel circle hooks north of 28° N. latitude does not preclude the Council or NMFS from considering the use of appendaged circle hooks in the future.

The Council discussed the establishment of a buy-out program for commercial snapper-grouper fishermen in Georgia. A buy-out program for the commercial sector would require a great deal of planning, time, funds, and acceptance from fishery participants. Because of these limiting factors and the need to act to end overfishing promptly, a buy-out program was not pursued by the Council or NMFS during the Amendment 17A development process. The Council considered alternatives that would allocate the red snapper ACL by state and sector. The Council moved these alternatives to the considered but rejected section of the amendment because the Council determined that both a harvest prohibition and an area closure for snapper-grouper species was needed to end red snapper overfishing. The Council may consider alternatives for allocating red snapper harvest among states and sectors when the stock rebuilds to a biomass level that would support some level of harvest.

Comment 19: One fishing association submitted a comment, endorsed by 12 commenters, stating the comment period on the proposed rule intentionally ended 2 days before the SEDAR 24 assessment results became public. This comment also stated NMFS' scientific position changed when the decision was made to conduct a full benchmark assessment instead of an update to the SEDAR 15 (2008) assessment, implying an admission that SEDAR 15 (2008) was not based upon the best scientific information available. The same commenter stated that SEDAR 15 did not use a "continuity run."

Response: The Magnuson-Stevens Act required the Council to develop a plan to end overfishing within one year, if notified of a stock's overfished status prior to July 12, 2009. Therefore, waiting to implement Amendment 17A until after the new stock assessment (SEDAR 24) is completed would further delay this required action. NMFS is aware of the coincidental timelines associated with the completion of SEDAR 24 and the implementation of Amendment 17A. The Council and NMFS are prepared to act expeditiously to modify management measures if the Council concludes that the results of SEDAR 24 indicate such an adjustment is appropriate.

SEDAR 15 (2008) concluded that red snapper is overfished and undergoing overfishing, requiring the Council to prepare a plan amendment to end overfishing and rebuild the stock. During the amendment's development, fishermen expressed concern that SEDAR 15 did not capture the spike in discards and landings that occurred during 2007–2009 because the assessment considered data only through 2006. In order to include these landings and apply additional statistical methods to the analysis, the SEDAR steering committee requested SEDAR replace the scheduled red snapper assessment update with a new benchmark assessment (SEDAR 24). SEDAR 15 (2008) was subjected to an external review by the Center for Independent Experts (CIE) and was also reviewed by the Council's SSC, both of which approved the assessment report. Furthermore, in a memorandum dated July 22, 2010, the SEFSC certified that Amendment 17A is based upon the best scientific information available.

Continuity runs of SEDAR 15 with the red snapper assessment conducted in 1997 were not performed because such runs would have been based upon prior research that used several assumptions, such as a 15-year life span for red snapper, which are now known to be inaccurate.

The results of the new SEDAR 24 benchmark assessment support the SEDAR 15 conclusion that red snapper is overfished and experiencing overfishing, although the rate of overfishing appears to be lower than estimated in the SEDAR 15 assessment. Although the SEDAR 24 assessment shows some signs of stock improvement, overfishing is still occurring and must be addressed within the requirements of the Magnuson-Stevens Act. The SEDAR 24 findings support the current red snapper harvest

prohibitions and indicate a lapse in these prohibitions could lead to more severe harvest reductions for the snapper-grouper fishery as a whole, with associated adverse socioeconomic impacts. NMFS and the Council are prepared to act expeditiously to modify management measures if the results of SEDAR 24 indicate such an adjustment is appropriate.

Comment 20: One commenter stated that closing an area will open the same area to fishing by foreign fleets.

Response: Closing an area to snapper-grouper fishing under Amendment 17A will not open up that area to fishing by foreign fleets. The Magnuson-Stevens Act authorizes the Federal Government to regulate fishing in the exclusive economic zone (EEZ) (3 to 200 nautical miles offshore), and it prohibits foreign fishing in the EEZ unless specifically conducted pursuant to an international fishery agreement and permit.

Comment 21: Two commenters stated the fishing mortality at maximum sustainable yield (F_{MSY}) proxy approved by NMFS is inadequate and does not follow the SSC's F_{MSY} proxy recommendation.

Response: Stock assessments have not been able to reliably estimate the MSY of South Atlantic red snapper. In such cases, the Magnuson-Stevens Act National Standard 1 Guidelines direct regional fishery management councils to adopt other measures of reproductive capacity as reasonable MSY proxies. In 1998, through Amendment 11 to the Snapper-Grouper FMP, the Council defined the MSY of red snapper to equal the yield associated with fishing at F_{MSY} or $F_{30\%SPR}$.

At its December 2008 meeting, the Council's SSC discussed the positive and negative effects of maintaining the current proxy for F_{MSY} ($F_{30\%SPR}$) versus establishing a new proxy for F_{MSY} at $F_{40\%SPR}$. Some SSC members supported the CIE's recommendation, based on SEDAR 15, to use $F_{40\%SPR}$ and cited literature and examples that showed that $F_{40\%SPR}$ is a more appropriate proxy for F_{MSY}. Other SSC members stated $F_{30\%SPR}$ should be maintained because it was approved by the Council for red snapper and other species in Amendment 11 to the FMP, and its corresponding steepness value (the magnitude of recruitment) is approximately 0.90, which was close to the estimated value of 0.95 in the base model.

The Council was very concerned about the implications of establishing a proxy that has not been previously used for red snapper. Specifying $F_{40\%SPR}$ as a new proxy could set a precedent that is not appropriate for all species in the snapper-grouper fishery management unit. After thoroughly considering the implications associated with the more conservative alternative F_{MSY} proxy of $F_{40\%SPR}$, as well as input from their SSC and NMFS, the Council elected to take no action to change the current definition of the F_{MSY} proxy. Amendment 17A specifies the numerical value for MSY associated with this definition as 2,431,000 lb (1,102,683 kg), whole weight, based on the most recent, completed, red snapper stock assessment at the time of final Council action (SEDAR 15 2008).

The more conservative F_{MSY} proxy of $F_{40\%SPR}$ recommended by the SSC would have resulted in a lower MSY value equal to 2,304,000 lb (1,102,683 kg), whole weight, and would have required greater harvest reductions to end overfishing and rebuild the stock on schedule. Choosing that proxy would have resulted in increased adverse economic impacts from ending overfishing on fishing communities. Therefore, the Council recommended that the SEFSC conduct a comprehensive review of how F_{MSY} proxies should be applied across all southeastern fisheries, and that the decision to apply a specific F_{MSY} proxy be made at the regional level rather than on a species-by-species basis.

Comment 22: Three commenters state Amendment 17A fails to specify an acceptable biological catch (ABC) or ABC control rule for red snapper.

Response: The SSC provided an overfishing limit (OFL) and ABC recommendations in terms of pounds of fish at its June 2008 meeting, but the SSC did not have an ABC control rule to assist them with estimating ABC and indicated that they considered the values to be "interim" until more robust methods for estimating these parameters could be made available. At its December 2008 SSC meeting, the SSC considered the guidance given in the proposed Magnuson-Stevens Act National Standard 1 Guidelines and rescinded all estimates of ABC from its June 2008 meeting (except for an ABC of zero for speckled hind and warsaw grouper). The SSC also recommended at its December 2008 meeting that the ABC levels for snowy grouper, black sea bass, and red snapper be set consistent with the rebuilding plans for those species until they can be further amended on better scientific information. The SSC met in March and June of 2009 to determine ABC control rules for data rich species, and met in April and August of 2010 to identify the protocol for determining the ABC for data poor species. The SSC recommended that current ABC levels for red snapper be set consistent with the rebuilding plan until they can be further amended.

Comment 23: Two commenters stated that by choosing to rely on an OFL based on the F_{MSY} proxy of $F_{30\%SPR}$, which is equivalent to 146,939 lb (66,650 kg), and then setting the ABC at 97 percent of the Council's OFL, or 144,000 lb (65,317 kg), the Council set the ABC for red snapper well above the SSC-recommended OFL of 104,124 lb (47,230 kg). Furthermore, the commenter states the Council's ABC of 144,000 lb (65,317 kg) is also well above the 101,000 lb (45, 813 kg) catch level that is based on the rebuilding plan under the SSC's recommended F_{MSY} proxy.

Response: Section 1.4.2 of Amendment 17A discusses the SSC's recommendation of ABC and OFL. Initially, the SSC recommended an interim OFL and ABC for red snapper equal to the yield at 75 percent F_{MSY}. At its December 2008 meeting, the SSC withdrew its OFL and ABC recommendations, and instead recommended the ABC level be set consistent with the rebuilding plan in Amendment 17A, which specifies an F_{OY} equal to 98 percent F_{MSY} (98 percent $F_{30\%SPR}$) and rebuilds the stock in 35 years. Therefore, ABC is consistent with the rebuilding plan outlined in Amendment 17A.

Comment 24: One commenter stated that Amendment 17A violates the requirement for the Council to set ACLs that do not exceed the ABC recommendation of the SSC.

Response: The Magnuson-Stevens Act requires the Council to develop ACLs that may not exceed the fishing level recommendation of its SSC. The National Standard 1 Guidelines state that the SSC recommendation most relevant to ACLs is ABC, as both are levels of annual catch. The SSC's ABC recommendation for red snapper is that the ABC should be consistent with the rebuilding plan. Therefore, the ABC is specified as an F_{OY} equal to 98 percent F_{MSY} (98 percent $F_{30\%SPR}$) and rebuilds in 35 years. This allows a total red snapper mortality (in the form of dead discards) of 144,000 lb (65,317 kg) whole weight in year one of rebuilding. Total mortality is calculated from rebuilding projections of spawning stock biomass, recruitment, allowable removals from the population, and probability of stock recovery, under different fishing mortality rates developed by the SEFSC. This rebuilding plan is consistent with the current F_{MSY} proxy ($F_{30\%SPR}$), which requires a 76 percent reduction in harvest of red snapper. The Council's preferred alternative in Amendment

17A establishes an ACL of 0 lb (0 kg) based on landed catch.

The Council considered including both landed catch and discards in the specification of the red snapper ACL; however, the SSC concluded that existing data collection and reporting systems are not adequate to support monitoring discarded red snapper in the commercial and recreational fisheries and expressed concern that doing so may create an incentive for fishermen to under-report red snapper discards.

Comment 25: Two commenters stated the AMs specified in Amendment 17A are based on the ACL, which includes landings only (all red snapper landings would be prohibited under this final rule), and therefore are not adequate because they do not correspond to total mortality. Additionally, the amendment does not include AMs that will be triggered annually if the total mortality exceeds the ABC.

Response: Through this final rule, NMFS establishes an ACL of zero for red snapper, which is applied to directed harvest. Therefore, a year-round closure is created for commercial and recreational harvest of red snapper throughout the entire South Atlantic EEZ. Additionally, the results of SEDAR 15 required the Council to reduce the bycatch mortality of red snapper in order to end overfishing. The Council thus imposed a 4,827 square mile (7,763 square km) closed area from Cape Canaveral, Florida, to southern Georgia to all snapper-grouper fishing (except when using black sea bass pots or spearfishing gear) to achieve the fishing mortality reduction required by SEDAR 15.

The Council considered including both landed catch and discards in the specification of the red snapper ACL; however, the SSC concluded that existing data collection and reporting systems are not adequate to support monitoring discarded red snapper in the commercial and recreational fisheries and expressed concern that doing so may create an incentive for fishermen to under-report red snapper discards.

Prohibiting all directed harvest of red snapper is the most stringent AM that could be implemented for the species. The preferred red snapper AM alternative includes a provision for tracking catch per unit effort (CPUE) via fishery-dependent and fishery-independent monitoring programs, and periodically evaluating the CPUE data to determine if adjustments to the ACL and management measures are appropriate. If the data indicate an adjustment is warranted, action could be taken expeditiously through a framework amendment. The Council did consider establishing annual catch targets (ACTs) as part of the accountability mechanism for red snapper. However, the commercial and recreational harvest of red snapper is prohibited, therefore, it was determined that ACTs are not necessary at this time. It is anticipated that red snapper harvest will be allowed in the future, at which time the Council may consider establishing ACTs.

Comment 26: One commenter stated Amendment 17A violates the Magnuson-Stevens Act because it does not clearly specify an OFL for red snapper.

Response: According to the Magnuson-Stevens Act National Standard 1 Guidelines, OFL is an annual amount of catch that corresponds to the estimate of maximum fishing mortality threshold (MFMT) applied to a stock or complex's abundance. Amendment 11 to the FMP defines MFMT as the yield at F_{MSY} where $F_{30\%SPR}$ is the default F_{MSY} proxy. Amendment 17A retains the status quo proxy for F_{MSY} at $F_{30\%SPR}$, which when applied to the red snapper stock would be the equivalent to the OFL. The numerical value of this parameter will change annually as stock biomass increases in response to the rebuilding plan, and is estimated as 2,431,000 lb (1,102,683 kg), whole weight, when the stock is at equilibrium based on the SEDAR 15 assessment.

Comment 27: Two commenters stated Amendment 17A management measures are based on unsubstantiated discard mortality assumptions, and unrealistic compliance rates.

Response: The discard mortality rates used in Amendment 17A are provided by the SEDAR 15 (2008) assessment. The stock assessment evaluated findings from numerous studies to estimate release mortality of red snapper. SEDAR 15 (2008) panel participants considered a previous assessment of the red snapper population along the Atlantic coast that used point estimates of 10 percent and 25 percent for release mortality based on observations by NMFS personnel. These estimates are low when compared to data in the 2009 Gulf of Mexico Red Snapper Assessment Update to SEDAR 7 (2004). Panel members also considered recent observer data collected from the headboat sector on the Atlantic coast and commercial sectors on the Atlantic coast and in the Gulf of Mexico. After examining the results from the many different release mortality studies, SEDAR 15 (2008) recommended the release mortality be set at 40 percent (30 to 50 percent selectivity range) for the recreational sector and 90 percent (80 to 100 percent selectivity range) for the commercial sector. Discard mortality was evaluated through sensitivity runs and was not a significant factor in the fishing mortality or abundance estimates.

Varying degrees of compliance were discussed by the Council and NMFS, and were included in the model estimates of harvest reductions needed to end overfishing. The model used compliance assumptions ranging from 100 percent to 80 percent. Data on compliance rates as they relate to closed areas in the snapper-grouper fishery are limited. The fishery does not require vessel monitoring systems, and therefore does not have a highly accurate method to predict compliance for the subject closure. The Council determined it was reasonable to assume a compliance rate of 90 percent or less at this time, and adjust rebuilding measures as appropriate in response to new information. Therefore, the model scenarios incorporating less than 90 percent compliance were used to inform their selection of the preferred closed area alternative. NMFS agrees with this determination and concluded the conservation and management measures proposed in Amendment 17A are based on the best scientific information available.

Comment 28: One commenter stated the SEFSC disagreed with the Council's decision to base its selected catch limits necessary to end overfishing on a "very high recruitment" scenario.

Response: The Council and SEFSC considered projections with very high recruitment to be a reasonable approach as the 2008 and 2009 red snapper landings in the U.S. South Atlantic were much higher than have been observed in recent years, and high landings followed a spike in discards, which occurred in 2007. As the majority of fish being landed are near the legal limit of 20 inches (50.8 cm) TL and age information from red snapper collected in 2009 indicated approximately 80 percent of the fish were age 3 and 4, there was evidence that the high landings are being driven by a particularly strong year-class entering the fishery. At its September 2009 meeting, the Council expressed concern that rebuilding projections in Amendment 17A did not consider recent high recruitment since the SEDAR 15 assessment only included landings data through 2006. As a result, the Council stated the projections could underestimate the magnitude of expected discards, and the yield at target fishing mortality could be higher. In response, the Council requested new projections, which incorporate the high recruitment that appears to have occurred in 2006.

To examine the effects of such a pulse of recruitment on projections, the SEFSC produced projections where the 2006 year-class was inflated to one of three levels, corresponding to 50 percent, 100 percent, and 150 percent of the maximum recruitment event observed in the SEDAR 15 assessment over the years 1974–2006. The three levels were labeled as "high", "very high", and "extremely high."

At the September 2009 Council meeting, the SEFSC advised the Council the use of "very high" recruitment estimates were most appropriate for red snapper in the South Atlantic. While the SSC expressed concern in its Consensus Statements and Report from the December 2009 Meeting that adoption of the "very high" recruitment estimate was overly optimistic, they acknowledged that assumptions regarding recent recruitment pulses would be tested in SEDAR 24. That assessment, which was completed in late October 2010, confirms that notably strong year classes occurred in 2006 and 2007.

Comment 29: Three commenters stated that Amendment 17A fails to take into account management uncertainty when establishing management measures to end overfishing.

Response: The Council and NMFS considered management uncertainty during the deliberative process of choosing management measures intended to end overfishing of red snapper and rebuild the stock within the specified timeframe. The Council and NMFS utilized a specialized model to estimate the percentage reductions gained in total red snapper mortality under various scenarios. Each scenario took into account the effects of management uncertainty that could result from impacts of recently implemented regulations, estimated compliance rates, and variations in offshore and inshore release mortality rates. These assumptions are discussed in detail in Appendix E of Amendment 17A.

Comment 30: Two commenters stated that Amendment 17A actions prioritize the minimization of socioeconomic harm over conservation.

Response: Amendment 17A was developed by the Council and NMFS pursuant to Magnuson-Stevens Act requirements to end overfishing of red snapper and rebuild the overfished stock within the specified rebuilding schedule. NMFS must also minimize, to the extent practicable, the unavoidable negative socioeconomic impacts of achieving these conservation objectives. The Council chose, and NMFS approved, the management measures that best minimized these socioeconomic impacts without compromising conservation objectives. Because red snapper is part of a multispecies fishery, the SEDAR 15 assessment indicated that bycatch mortality is high, and that an area closure for all snapper-grouper fishing was necessary to end overfishing. The size of the area closure was the subject of extensive deliberation. The Council determined, and NMFS agrees, that the preferred area closure, based on SEDAR 15 assessment results, is the best balance between ending overfishing and minimizing economic harm.

Data uncertainty surrounding SEDAR 15 made the Council's task of designating appropriate rebuilding goals and management measures for red snapper very difficult. Subsequently, the Council has been criticized for choosing reference points and management measures that are either not conservative enough, or too conservative. Amendment 17A has been cited as being overly optimistic in its assumptions and capacity to rebuild the stock. However, the recently completed SEDAR assessment (SEDAR 24) affirms that red snapper are overfished and are undergoing overfishing. The results of SEDAR 24 will be presented to the Council at their December 2010 meeting. At that time, they may choose to adjust the management measures, which may be done through a regulatory amendment according to the Snapper-Grouper FMP Framework Procedures.

Comment 31: One commenter stated that Amendment 17A fails to include bycatch in the ACL.

Response: Establishing an ACL of zero, based on landed catch, would not require monitoring dead discards in order to monitor the ACL. The SSC has opposed on several occasions including dead discards as part of the ACL since discard data are self-reported and there is greater uncertainty with discard data than with estimates of landings. The alternative ACL specification was also zero, but it included landings and dead discards. This option would require NMFS to monitor discarded red snapper in the commercial and recreational sectors for the purposes of tracking the ACL; though discard data will be recorded and monitored via the fishery-independent monitoring program intended to track rebuilding progress. At its March 2009 meeting, the SSC indicated their recommendation of acceptable biological catch of zero for speckled hind and warsaw grouper was based on landed catch only due to concern about monitoring discards. The SSC expressed concerns when discussing ACLs based on dead discards for speckled hind and warsaw grouper at its March 2009 meeting. The SSC was not only concerned about the accuracy of discard data from the recreational and commercial sectors but also the possibility that some members of the fishing community might under-report discarded fish if they believed further restrictions might be imposed if levels of dead discards became elevated. Based on this recommendation from the SSC, the Council and NMFS determined an ACL equal to zero, based on landed catch only, would be the most appropriate ACL value for red snapper in the South Atlantic. Estimates of dead discards are incorporated in a model to determine reductions in mortality needed to end red snapper overfishing. The model was used by Council to reduce bycatch and end overfishing of red snapper through the establishment of a closed area where the harvest of all snapper-grouper species would be prohibited with all gear types except black sea bass pots and spearfishing gear.

Comment 32: Two commenters stated that several of the options chosen by the Council as preferred alternatives were not included in the DEIS. As a result, the alternatives did not receive adequate review and analysis, and were not subject to appropriate public notice, review and comment, as required by law.

Response: One alternative contained in the FEIS was not identified as a separate alternative in the DEIS, but it was included in the range of alternatives considered and analyzed in the DEIS. This red snapper management measure, Alternative 3E, was identified by the Council as its preferred snapper-grouper area closure alternative at its June 2010 meeting after reviewing public comments on the DEIS, as well as new information on the reduction in total mortality needed to end overfishing as defined by the status quo F_{MSY} proxy of $F_{30\%SPR}$. As this reduction was slightly less than that required by the formerly preferred $F_{40\%SPR}$ proxy, the Council included a new, preferred area closure alternative that encompassed a smaller area reflective of the reduced harvest reductions needed under the status quo F_{MSY} proxy. The environmental impacts of Alternative 3E fell within the scope of those evaluated in the DEIS for the closure alternatives considered, and thus did not necessitate the publication of a supplemental DEIS.

Comment 33: Two commenters stated that NMFS chose to move forward with approval of the rebuilding plan and management measures in Amendment 17A despite a statement from the SSC that the proposed management

measures may not be sufficient to end overfishing of red snapper. One commenter stated the FEIS does not address the SSC's concerns with whether or not Amendment 17A would end overfishing.

Response: In its Consensus Statement and Report for the December 2009 Council meeting, the SSC stated that none of the management options in draft Amendment 17A appear to prevent overfishing because the analyses and alternatives are based on overly optimistic assumptions regarding the steepness of the stock-recruit curve, a "very high recruitment" pulse in 2006, as well as expected rates of compliance and effort shifting. However, SSC representatives speaking to these issues during the Council's December 2009 Snapper-Grouper Committee meeting acknowledged the SSC's conclusion assumed that the rate of overfishing was defined using a more conservative F_{MSY} proxy ($F_{40\%SPR}$) than the status quo proxy of $F_{30\%SPR}$, that steepness was defined based on their recommendation for short-term projections but it has relatively little impact on the effectiveness of management measures in ending overfishing, and that assumptions regarding recent recruitment pulses were not overly risky because they would be tested in the new benchmark assessment SEDAR 24. SEDAR 24, which was completed in late October 2010, confirms that notably strong year classes occurred in 2006 and 2007.

While rates of compliance and effort shifting remain difficult to predict, the Council determined it was reasonable to assume a compliance rate of 90 percent or less at this time, and adjust rebuilding measures as appropriate in response to new information. Therefore, the model scenarios incorporating less than 90 percent compliance were used to inform the Council's selection of the preferred closed area alternative. The Council also determined any effort shifting would not be expected to have a significant adverse impact on the red snapper rebuilding plan because the management measures proposed in Amendment 17B, if approved, would greatly diminish the incentive to target snapper-grouper species in deep water and discard mortality would be reduced if effort shifted to inshore waters. NMFS agrees with these assumptions and certified that the conservation and management measures in Amendment 17A are based on the best available scientific information.

The new SEDAR assessment (SEDAR 24) also supports these assumptions, indicating the rate of overfishing is likely lower than that estimated by the base run in SEDAR 15 and that the red snapper stock is in better shape than portrayed by SEDAR 15. The Council will review the results of SEDAR 24 at their December 2010 meeting and may propose additional action at that time, as appropriate.

Comment 34: One commenter stated the FEIS fails to disclose and analyze the fundamental flaws in the scenarios relied upon to determine that the management measures will reduce fishing mortality below the OFL, especially with regard to bycatch mortality estimates and projected compliance rates.

Response: The biological analysis for management actions in Amendment 17A and its associated FEIS, specifically Appendix E of the document, provides details regarding the analytical model used to develop the area closure alternatives. Appendix E also provides information on the limitations associated with the model's assumptions, which were used in determining reductions in total mortality provided by the proposed area closures. The report accompanying the model compares projected removal rates under the following scenarios with or without: (1) Elimination of directed and/or targeted trips due to regulations; (2) changes in overall release mortality; (3) distinct inshore release mortality; and (4) varying compliance rates. Projected reductions in total removals were computed from baseline 2005–2007 data compiled from commercial logbook, MRFSS, and headboat logbook data for the U.S. South Atlantic. In various scenarios, baseline removals were reduced as a function of trip elimination, spatial and bathymetric closures, and changes in release mortality. As with most projections, certain assumptions must be made to produce meaningful results. The assumptions made in the model analysis used to determine what level of harvest reduction could be achieved under the various area closure alternatives, are based upon the best available information from SEDAR 15, and recommendations by the Council's SSC. Any assumptions used to operate the model, which predicted overall harvest reductions possible under various red snapper management measure alternatives, were disclosed and subjected to public, SSC, and SEFSC review.

Comment 35: One commenter stated that the FEIS fails to consider: The impacts of not selecting an explicit OFL that is derived from the SSC-recommended MSY proxy; the impacts of setting the ABC above the OFL that is derived from the SSC-recommended F_{MSY} proxy; the impacts of basing the ABC on the rebuilding plan as opposed to basing it on an ABC control rule that incorporates scientific uncertainty contained within the overfishing level; and the impacts on bycatch and stopping overfishing with using an ACL that is based on landings only.

Response: Amendment 17A and its associated FEIS include analyses of the potential impacts of all alternatives on the biological, economic, social, and administrative environments, including the "No Action" alternatives as required by the National Environmental Policy Act. Analyses include the impacts of adopting a new definition for the F_{MSY} proxy versus retaining the status quo F_{MSY} proxy. The FEIS for Amendment 17A satisfies all NEPA requirements.

Section 1.4.2 of Amendment 17A discusses the SSC's recommendation of ABC and OFL. At its December 2008 meeting, the SSC recommended the ABC level be set consistent with the rebuilding plan in Amendment 17A. Therefore, the ABC is specified to equal F_{OY}, which is defined as 98 percent F_{MSY} (98 percent $F_{30\%SPR}$), during the rebuilding schedule. This allows a total red snapper mortality of 144,000 lb (65,317 kg) whole weight in year one of rebuilding based on the status quo F_{MSY} proxy of $F_{30\%SPR}$, which requires a 76 percent reduction in red snapper harvest.

According to the Magnuson-Stevens Act National Standard 1 Guidelines, OFL is an annual amount of catch that corresponds to the estimate of MFMT applied to a stock or complex's abundance. Amendment 11 to the FMP defines MFMT as the yield at F_{MSY} where $F_{30\%SPR}$ is the default F_{MSY} proxy. Amendment 17A retains the status quo proxy for F_{MSY} at $F_{30\%SPR}$, which when applied to the red snapper stock would be the equivalent to OFL. The numerical value of this parameter will change annually as stock biomass increases in response to the rebuilding plan, and is estimated as 2,431,000 lbs (ww) when the stock is at equilibrium based on the SEDAR 15 assessment. Therefore, ABC is less that OFL, since OFL is based on the status quo proxy for F_{MSY} and ABC is specified to equal F_{OY}, which is defined as 98 percent of the status quo proxy for F_{MSY}.

The Council considered including both landed catch and discards in the specification of the red snapper ACL; however, the SSC concluded that existing data collection and reporting systems are not adequate to support monitoring discarded red snapper in the commercial and recreational fisheries and expressed concern that doing so

may create an incentive for fishermen to under-report red snapper discards.

Classification

The Regional Administrator, Southeast Region, NMFS, determined that Amendment 17A is necessary for the conservation and management of the snapper-grouper fishery and is consistent with the Magnuson-Stevens Act and other applicable laws.

This final rule has been determined to be not significant for purposes of Executive Order 12866.

NMFS prepared an FEIS for this amendment. A notice of availability for the FEIS was published on August 20, 2010 (75 FR 51458). A copy of the ROD is available from NMFS (*see* **ADDRESSES**).

NMFS prepared a FRFA, as required by 604 of the Regulatory Flexibility Act, for this final rule. The FRFA incorporates by reference the initial regulatory flexibility analysis (IRFA), a summary of the significant issues raised by public comments, NMFS responses to those comments, and a summary of the analyses completed to support the action. A copy of the analysis is available from NMFS (*see* **ADDRESSES**). The FRFA follows.

No comments specific to the IRFA were received. However, several comments were submitted on the economic effects of the proposed rule. Most comments stated the proposed rule would have devastating economic effects on the fishing industry. Some comments noted that the proposed rule would create undue hardships on for-hire crew, support industries, and associated communities. Other comments stated that the economic analysis underestimated the adverse economic effects of the proposed rule on the for-hire sector in particular and the recreational sector in general.

The economic analysis conducted for the proposed rule estimated the expected quantitative effects of each alternative to the extent possible. Qualitative discussions of expected effects were provided where data or analytical techniques were not available. The analysis focused on the expected change in economic value, where economic value was measured by net operating revenues for commercial and for-hire vessels and consumer surplus for recreational anglers. An expenditure analysis was also conducted to provide some insights into the distributional effects of the proposed rule. This analysis examined the direct and indirect effects (sales/output, income/value-added, and full-time employment) of revenue reductions on the commercial sector and of target trip reductions on the recreational sector due to the proposed rule. The economic analysis concluded that, with the exception of the no action alternatives, practically all alternatives would result in short-run adverse economic effects on fishers, support industries, and associated communities. The adverse economic effects would be borne mostly by commercial and for-hire operations in northeast Florida and Georgia. Some alternatives to the proposed rule would be expected to result in lower adverse economic effects but would not achieve the Council's objective for that particular action. Other alternatives to the proposed rule would achieve the Council's objectives but were projected to result in larger adverse economic effects.

NMFS agrees with the Council's choice of preferred alternatives as those which would be expected to best achieve the Council's objectives while minimizing to the extent practicable the adverse effects on fishers, support industries, and associated communities.

No changes in the final rule were made in response to public comments.

The final rule, which consists of several actions, would introduce changes to the management of the South Atlantic snapper-grouper fishery. This rule would prohibit all commercial and recreational harvest and possession of red snapper year-round in the South Atlantic EEZ. Prohibition of the harvest and possession of red snapper applies in the South Atlantic on board a vessel for which a valid Federal charter vessel/headboat or commercial permit for South Atlantic snapper-grouper has been issued, without regard to where such species are harvested, *i.e.,* in State or Federal waters. Furthermore, this rule would prohibit commercial and recreational harvest and possession of all snapper-grouper species year-round in an area that includes commercial logbook grids 2880, 2980, and 3080 between 98 ft (16 fathoms; 30 m) and 240 ft (40 fathoms; 73 m), except when snapper-grouper (other than red snapper) are harvested with (a) black sea bass pots that have a valid identification tag attached, or (b) spearfishing gear. The prohibition on possession does not apply to a person aboard a vessel that is in transit with other snapper-grouper species on board and with fishing gear appropriately stowed. Finally, this rule would require the use of non-stainless steel circle hooks when fishing for snapper-grouper with snapper-grouper hook-and-line gear and natural baits north of 28° N. latitude.

The Magnuson-Stevens Act provides the statutory basis for the final rule.

No duplicative, overlapping, or conflicting Federal rules have been identified. The final rule would not alter existing reporting, record keeping, or other compliance requirements, except when the vessel is in transit across the closed area, during which, fishing gear must be appropriately stowed, or when the vessel is selected for the fishery-independent monitoring program to track the progress of red snapper.

This final rule is expected to directly affect commercial harvesting and for-hire fishing operations. The Small Business Administration has established size criteria for all major industry sectors in the U.S. including fish harvesters and for-hire operations. A business involved in fish harvesting is classified as a small business if it is independently owned and operated, is not dominant in its field of operation (including its affiliates), and has combined annual receipts not in excess of $4.0 million (NAICS code 114111, finfish fishing) for all its affiliated operations worldwide. For for-hire vessels, the other qualifiers apply and the annual receipts threshold is $7.0 million (NAICS code 713990, recreational industries).

In 2003–2007, an average of 944 vessels per year was permitted to operate in the commercial snapper-grouper sector. Of these vessels, 749 held transferable permits and 195 held non-transferable permits. On average, 890 vessels landed 6.43 million lb (2.92 million kg) of snapper-grouper and 1.95 million lb (0.88 million kg) of other species on snapper-grouper trips. Total dockside revenues from snapper-grouper species stood at $13.81 million (2007 dollars) and from other species, at $2.30 million (2007 dollars). Considering revenues from both snapper-grouper and other species, the average revenues per vessel were $18,101. An average of 27 vessels per year harvested more than 50,000 lb (22,680 kg) of snapper-grouper species per year, generating at least, at an average price of $2.15 (2007 dollars) per pound, dockside revenues of $107,500. Vessels that operate in the snapper-grouper fishery may also operate in other fisheries, the revenues of which cannot be determined with available data and are not reflected in these totals.

Although a vessel that possesses a commercial snapper-grouper permit can harvest various snapper-grouper species, not all permitted vessels landed all of the snapper-grouper species most affected by this amendment, *i.e.* red snapper, gag, vermilion snapper, black sea bass, black grouper, and red grouper. The following average number of vessels landed the subject species in 2003–

2007: 292 vessels landed gag, 253 vessels landed vermilion snapper, 220 vessels landed red snapper, 237 vessels landed black sea bass, 323 vessels landed black grouper, and 402 vessels landed red grouper. Combining revenues from snapper-grouper and other species on the same trip, the average revenue (2007 dollars) per vessel for vessels landing the subject species were $20,551 for gag, $28,454 for vermilion snapper, $22,168 for red snapper, $19,034 for black sea bass, $7,186 for black grouper, and $17,164 for red grouper.

Based on revenue information, all commercial vessels directly affected by the final rule are considered small entities.

The for-hire fleet is comprised of charterboats, which charge a fee on a vessel basis, and headboats, which charge a fee on an individual angler (head) basis. In 2003–2007, an average of 1,635 vessels was permitted to operate in the snapper-grouper for-hire sector, of which 82 are estimated to have operated as headboats. Within the total number of vessels, 227 also possessed a commercial snapper-grouper permit and are included in the summary information provided on the commercial sector. The charterboat annual average gross revenue is estimated to range from approximately $62,000–$84,000 for Florida vessels, $73,000–$89,000 for North Carolina vessels, $68,000–$83,000 for Georgia vessels, and $32,000–$39,000 for South Carolina vessels. For headboats, the corresponding estimates are $170,000–$362,000 for Florida vessels, and $149,000–$317,000 for vessels in the other States.

Based on these average revenue figures, all for-hire operations directly affected by the final rule are considered small entities.

Some fleet activity may exist in both the commercial and for-hire snapper-grouper sectors but its extent is unknown, and all vessels are treated as independent entities in this analysis.

All entities that are expected to be directly affected by the final rule are considered small entities.

The final rule is expected to reduce short-run harvests and fishing opportunities of commercial and for-hire vessels that, in turn, would reduce their short-run revenues and profits. In the following discussion, net operating revenue is considered equivalent to profit.

Prohibiting all commercial and recreational harvest and possession of red snapper year-round in the South Atlantic EEZ and prohibiting all commercial and recreational harvest and possession of other species (except when caught with spearfishing gear or black sea bass pots that have a valid identification tag issued by the RA attached) in the snapper-grouper fishery year-round in the area that includes commercial logbook grids 2880, 2980, and 3080 between 98 ft (16 fathoms; 30 m) and 240 ft (40 fathoms; 73 m) is expected to reduce net operating revenues of commercial vessels operating in the South Atlantic by an average of approximately $430,000 (4.8 percent), assuming the no action alternatives in Amendment 17B to the FMP, or $931,000 (10.3 percent) when combined with the preferred alternatives in Amendment 17B to the FMP. This measure is also expected to reduce the net operating revenues of for-hire vessels operating in the South Atlantic by approximately $5.04 million. Most of the effects would be borne by commercial and for-hire vessels operating in northeast Florida and Georgia, and would comprise a significant portion of these vessels' net operating revenues. Moreover, most of the effects would fall on commercial vessels using vertical lines and on headboats. However, it is highly probable that the effects on headboats are overestimated due to overestimation of affected target trips by headboats.

Exempting from the closed area prohibition the harvests of snapper-grouper species, except red snapper, caught with spearfishing gear or black sea bass pots that have valid identification tags would mitigate the effects of the area closures on commercial vessels. These effects are already incorporated in the estimated effects of the fishing prohibition on red snapper and fishing prohibition on snapper-grouper in the closed area.

Requiring the use of non-stainless steel circle hooks when fishing for snapper-grouper species with snapper-grouper hook-and-line gear north of 28° N. latitude is expected to increase the fishing costs of some commercial and for-hire vessels. Depending on the physical structure of a fish's mouth and the way that the fish takes bait, the circle hook requirement may reduce the harvest of some desired species. The potential cost increase and harvest reduction cannot be estimated, although they are deemed to be relatively small considering that circle hooks are already used on some vessels.

The estimated short-run reductions in the net operating revenues of the directly affected small entities, particularly for-hire vessels, may be considered substantial. Small entities operating off of northeast Florida and Georgia are expected to bear most of the short-run adverse economic effects, with these effects comprising a significant portion of their net operating revenues.

For the various red snapper management measures, there were 15 alternatives, and three sub-alternatives considered. Four of the alternatives and one of the sub-alternatives including: (1) The red snapper prohibition; (2) the snapper-grouper area closure; (3) the red snapper ACL; and (4) the red snapper AM, comprise the final action.

The first alternative for each of the elements of the final action was the no action alternative, which would not conform to the Magnuson-Stevens Act requirements to end the overfished and overfishing conditions of red snapper. The second alternative to the final action would prohibit all commercial and recreational harvest and possession of red snapper year-round in the South Atlantic EEZ. This alternative has been determined to be insufficient to rebuild the red snapper stock within the specified timeframe due to discard mortalities when fishing for co-occurring snapper-grouper species. The third alternative to the final action would close four logbook grids and would close all water depths in the four subject areas. This alternative would result in larger short-run adverse economic effects than the final action. The fourth alternative to the final action would close four logbook grids and would close more water depths in the shallower parts of the four subject areas. This alternative would result in larger short-run adverse economic effects than the final action. The fifth alternative to the final action is similar to the final action, except that it would close four, instead of three, logbook grids. This alternative would result in slightly larger short-run adverse economic effects than the final action. The sixth alternative to the final action would close four logbook grids and would close more water depths in the deeper parts of the four subject areas. This alternative would result in larger short-run adverse economic effects than the final action. The seventh alternative to the final action differs from the final action by closing four additional areas and all water depths in the subject seven areas. This alternative would result in substantially larger short-run adverse economic effects than the final action. The eighth alternative to the final action differs from the final action by closing four additional areas and more water depths in the shallower parts of the subject seven areas. This alternative would result in substantially larger short-run adverse economic effects than the final action. The ninth alternative to the final action differs

from the final action by closing four additional areas. This alternative would result in substantially larger short-run adverse economic effects than the final action. The tenth alternative to the final action differs from the final action by closing four additional areas and more water depths in the deeper parts of the subject seven areas. This alternative would result in substantially larger short-run adverse economic effects than the final action. The eleventh alternative to the final action would, in combination with any of the alternatives that would prohibit harvest and possession of red snapper and close four or seven areas to snapper-grouper fishing, allow harvest and possession of snapper-grouper species (except red snapper) with bottom longline gear in the closed areas deeper than 50 fathoms (91 m). Relative to the final action, this alternative would have smaller adverse effects on commercial vessels and no effects on for-hire vessels. Three sub-alternatives, including the final action, were considered for vessels transiting through the closed areas. The first sub-alternative would be less restrictive than the final action by not requiring that fishing gear be appropriately stowed when vessels transit through the closed areas. This alternative would slightly mitigate the adverse economic effects of the closed areas, but it could compromise the effectiveness of enforcing regulations in the closed areas. The second sub-alternative to the final action would be less restrictive than the final action for vessels with wreckfish on board. This alternative would particularly avoid the potential unintended adverse effects on vessels fishing for wreckfish, but it could also compromise the effectiveness of enforcing regulations in the closed areas.

Three alternatives, including the final action, were considered for requiring the use of circle hooks. The first alternative to the final action, the no action alternative, would not require the use of circle hooks, and so would not entail any additional fishing cost. On the other hand, it would not take advantage of the potential afforded by circle hooks in reducing discard and bycatch mortality of red snapper, particularly in the center of the red snapper fishing area. The second alternative to the final action would require the use of circle hooks throughout the South Atlantic EEZ and not just north of 28° N. latitude, as in the final action. This alternative could entail higher fishing costs than the final action. It could also lower vessel revenues when some species cannot be effectively caught with circle hooks, particularly in the southern areas where red snapper harvest is relatively low.

In addition to the foregoing actions, Amendment 17A also considered various alternatives for modifying the MSY proxy and establishing a rebuilding schedule, a rebuilding strategy, and a monitoring program for red snapper.

The Council elected to take no action to modify the status quo F_{MSY} proxy for red snapper, which is $F_{30\%SPR}$. The final action on rebuilding strategy for red snapper would define a rebuilding strategy that sets the rebuilding goal equal to SSB_{MSY} and sets the catch rate equal to F_{OY}, which is 98 percent F_{MSY} ($98\%F_{30\%SPR}$), and specify an ACL based on landings, equal to zero in 2010 and beyond 2010 until modified. OY at equilibrium would be 2,425,000 lb (1,099,961 kg) whole weight. The final action on monitoring programs is to establish a fishery-independent monitoring program to track the progress of red snapper. Sampling would include deployment of chevron traps, cameras, and snapper-grouper hook-and-line at randomly selected stations.

The Council considered modifying the status quo F_{MSY} proxy for red snapper at the advice of their SSC. Specifically, they evaluated the impacts of adopting a more conservative proxy of $F_{40\%SPR}$, which would provide more assurance that overfishing would be ended and the stock rebuilt within the specified timeframe. However, after thoroughly considering the implications associated with this more conservative proxy, as well as input from their SSC and NMFS, they elected to take no action to change the status quo definition of MSY. Amendment 17A specifies the numerical value associated with this definition as 2,431,000 lbs (ww) based on the most recent, completed, red snapper stock assessment at the time of final Council action (SEDAR 15 2008). Instead, the Council recommended that the SEFSC conduct a comprehensive review of how F_{MSY} proxies should be applied across all southeastern fisheries and are considering developing a more generic amendment to evaluate changing the MSY/MSY proxy for red snapper and other species, because it would allow the Council to achieve some level of consistency, where applicable, in defining MSY/MSY proxies across many species. Four alternatives, including the final action, were considered for the red snapper rebuilding schedule. The first alternative to the final action, the no action alternative, would not define a rebuilding schedule for red snapper. Considering that a previous rebuilding schedule expired in 2006 and the stock is overfished, this alternative would not meet the Magnuson-Stevens Act requirements. The second alternative to the final action would define a rebuilding schedule equal to 15 years, which is the shortest possible period to rebuild in the absence of fishing mortality. Even if retention of red snapper is prohibited, red snapper would still be caught since they have temporal and spatial coincidence with other species fishermen target. Because release mortality is estimated to be very high for red snapper, a 15-year rebuilding time period would require most of the EEZ to be closed to fishing for a majority of the snapper-grouper species to eliminate all incidental mortality of red snapper. The significant and irreversible socioeconomic impacts of such an action, which may or may not be recouped in the long run, make a 15-year schedule impracticable. The third alternative to the final action would define a rebuilding schedule equal to 25 years, which is the mid-point between the shortest possible (15 years) and maximum recommended (35 years) timeframe to rebuild the stock. This alternative would require more stringent regulations in the short run and thus more short-run adverse economic effects than the final action. Economic analyses indicate there is a fairly low level of likelihood that the future benefits of recovering the red snapper stock more quickly would outweigh the short-term costs to the red snapper fleet and the larger snapper-grouper fleet associated with the more restrictive regulations required by shorter rebuilding schedules.

Nine alternatives, including the final action, were considered for the rebuilding strategy, including the ACL and AM. With the exception of the no action alternative, each alternative includes two sub-alternatives for the ACL, and each ACL in turn includes three alternatives for the AM. The three AM alternatives, which all include monitoring programs, are identical for all alternatives and sub-alternatives, so they do not merit additional discussions here.

The rebuilding strategy is closely linked to the proxy for F_{MSY} since the goal is to rebuild the stock to its reproductive capacity at MSY (SSB_{MSY}). The current MSY definition requires a 76 percent reduction in total mortality of red snapper in order to end overfishing and rebuild the stock. Because the Council used a tiered approach in the development of Amendment 17A, maintaining the status quo F_{MSY} proxy influenced the suite of

rebuilding strategy alternatives from which the Council could choose a preferred. Thus, the range of applicable alternatives was ultimately narrowed to those based on the status quo F_{MSY} proxy of $F_{30\%SPR}$ (rebuilding strategy Alternatives 6–9). Rebuilding strategy Alternatives 2–5 are based on an F_{MSY} proxy of $F_{40\%SPR}$, and therefore, became technically inconsistent with red snapper management reference points after the Council decided to take no action to modify the F_{MSY} proxy. The Council chose a rebuilding strategy that sets the rebuilding goal equal to SSB_{MSY} and sets the catch rate equal to F_{OY}, which is 98%F_{MSY} (98%$F_{30\%SPR}$), with an ACL equal to zero based on landings only. Under this rebuilding strategy, the fishery would have a 53 percent chance of rebuilding to SSB_{MSY} on schedule.

The first alternative to the final action, the no action alternative, would not specify an ACL and so would not meet the Magnuson-Stevens Act requirements. In addition, it would set the rebuilding catch rate equal to F_{OY} at a level equivalent to 85 percent $F_{40\%SPR}$ such that OY at equilibrium equals 2,196,000 lb (996,089 kg) whole weight, which is technically inconsistent with the Council's decision to maintain the status quo F_{MSY} proxy of $F_{30\%SPR}$. The second alternative to the final action would define a red snapper rebuilding strategy that sets F_{OY} at a level equivalent to 85 percent $F_{40\%SPR}$ such that OY at equilibrium equals 2,199,000 lb (997,450 kg) whole weight, which is technically inconsistent with the Council's decision to maintain the status quo F_{MSY} proxy of $F_{30\%SPR}$. The first sub-alternative would base the ACL on landings, with the ACL equal to zero in 2010. This is identical to the final action. The second sub-alternative would base the ACL on total removal, with the ACL equal to 89,000 lb (40,370 kg) whole weight in 2010. This would still require prohibition of red snapper harvest by both the commercial and recreational sectors. In addition, this would require monitoring of dead discards so that total removal would not exceed the ACL. The difficulty of monitoring dead discards, together with the likelihood that self-reported discards would be understated, raises concerns regarding the eventual effectiveness of the rebuilding strategy. The third alternative to the final action would define a red snapper rebuilding strategy that sets F_{OY} at a level equivalent to 75 percent $F_{40\%SPR}$ such that OY at equilibrium equals 2,104,000 lb (954,358 kg) whole weight, which is technically inconsistent with the Council's decision to maintain the status quo F_{MSY} proxy of $F_{30\%SPR}$. The second sub-alternative would base the ACL on total removal, with the ACL equal to 79,000 lb (35,834 kg) whole weight in 2010. This sub-alternative raises similar issues of concern associated with the monitoring of dead discards. The fourth alternative to the final action would define a red snapper rebuilding strategy that sets F_{OY} at a level equivalent to 65 percent $F_{40\%SPR}$ such that OY at equilibrium equals 1,984,000 lb (899,927 kg) whole weight, which is technically inconsistent with the Council's decision to maintain the status quo F_{MSY} proxy of $F_{30\%SPR}$. The first sub-alternative is identical to the final action. The second sub-alternative would base the ACL on total removal, with the ACL equal to 68,000 lb (30,844 kg) whole weight in 2010. This sub-alternative raises similar issues of concern associated with the monitoring of dead discards. The fifth alternative to the final action would define a red snapper rebuilding strategy that sets F_{OY} at a level equivalent to 97 percent $F_{40\%SPR}$ such that OY at equilibrium equals 2,287,000 lb (1,037,366 kg) whole weight, which is technically inconsistent with the Council's decision to maintain the status quo F_{MSY} proxy of $F_{30\%SPR}$. The first sub-alternative is identical to the final action. The second sub-alternative would base the ACL on total removal, with the ACL equal to 68,000 lb (30,844 kg) whole weight in 2010. This sub-alternative raises similar issues of concern associated with the monitoring of dead discards. The sixth alternative to the final action would define a red snapper rebuilding strategy that sets F_{OY} at a level equivalent to 85 percent $F_{30\%SPR}$ such that OY at equilibrium equals 2,392,000 lb (1,084,993 kg) whole weight. This alternative would imply more restrictive measures than the final action in the short run, resulting in larger short-run adverse economic effects and potentially lower long-run benefits because of a lower OY. The first sub-alternative is identical to the final action. The second sub-alternative would base the ACL on total removal, with the ACL equal to 125,000 lb (56,699 kg) whole weight in 2010. This sub-alternative raises similar issues of concern associated with the monitoring of dead discards, although the higher ACL than that of previous sub-alternatives would tend to mitigate but not erase such concerns. The seventh alternative to the final action would define a red snapper rebuilding strategy that sets F_{OY} at a level equivalent to 75 percent $F_{30\%SPR}$ such that OY at equilibrium equals 2,338,000 lb (1,060,499 kg) whole weight. This alternative would imply more restrictive measures in the short run, resulting in lower short-run adverse economic effects and potentially higher long-run benefits because of a lower OY. The first sub-alternative is identical to the final action. The second sub-alternative would base the ACL on total removal, with the ACL equal to 111,000 lb (50,349 kg) whole weight in 2010. This sub-alternative raises similar issues of concern associated with the monitoring of dead discards, although the higher ACL than that of some previous sub-alternatives would tend to mitigate but not erase such concerns. The eighth alternative to the final action would define a red snapper rebuilding strategy that sets F_{OY} at a level equivalent to 65 percent $F_{30\%SPR}$ such that OY at equilibrium equals 2,257,000 lb (1,023,758 kg) whole weight. This alternative would imply more restrictive measures than the final action in the short run, resulting in lower short-run adverse economic effects and potentially lower long-run benefits because of a lower OY. The first sub-alternative is identical to the final action. The second sub-alternative would base the ACL on total removal, with the ACL equal to 97,000 lb (43,998 kg) whole weight in 2010. This sub-alternative raises similar issues of concern associated with the monitoring of dead discards, particularly that the ACL is lower than that of some previous sub-alternatives.

Three alternatives, including the final action, were considered for the red snapper monitoring program. The first alternative, the no action alternative, would not entail any additional cost by utilizing existing data collection programs. However, existing data collection programs may not be adequate to collect vital information on red snapper during the time harvest of the species is prohibited. The second alternative to the final action would establish a red snapper fishery-dependent monitoring program involving for-hire vessels. This alternative offers some potential as does the final action in collecting the needed information on red snapper, especially during the period when harvest of the species is prohibited. Although the near ideal approach is to combine this alternative with the final action, funding for both may not be available on a continuing basis.

Section 212 of the Small Business Regulatory Enforcement Fairness Act of 1996 states that, for each rule or group of related rules for which an agency is required to prepare an FRFA, the agency shall publish one or more guides to

assist small entities in complying with the rule, and shall designate such publications as "small entity compliance guides." As part of this rulemaking process, NMFS prepared a fishery bulletin, which also serves as a small entity compliance guide. The fishery bulletin will be sent to all vessel permit holders and permitted dealers in the South Atlantic snapper-grouper fishery.

Pursuant to 5 U.S.C. 553(d)(3), there is good cause to waive the 30-day delay in effective date for the management measures that implement the prohibitions on harvest and possession of red snapper in the South Atlantic. Red snapper are overfished and undergoing overfishing. An interim rule implementing these measures was promulgated on January 4, 2010 (74 FR 63673, December 4, 2009), extended on June 3, 2010 (75 FR 27658, May 18, 2010), and will expire on December 5, 2010. The persons affected by these management measures have been provided with notice and the opportunity to comment on these measures via the public comment period for the proposed interim rule, Amendment 17A, and the proposed rule for Amendment 17A, and they are aware of the intent of the Council and NMFS to continue the existing prohibitions immediately upon expiration of the interim rule. To prevent a lapse in these prohibitions, amendments to § 622.32, § 622.37, § 622.39, and § 622.45 must become effective on or before December 5, 2010.

A red snapper benchmark assessment (SEDAR 24) was completed in late October 2010, which provides additional information on the effectiveness of these prohibitions. The assessment indicates that red snapper are overfished and undergoing overfishing and that the current harvest prohibition for red snapper is providing substantial protection to the stock. Furthermore, the new assessment indicates a strong year class entered the fishery in 2006, and fishermen are aware that there are more young red snapper available than in previous years. Therefore, should a lapse occur in these prohibitions, it is expected that there would be very high fishing pressure on an unusually strong year class, which needs to be protected to help rebuild the stock. A lapse could also lead to more severe harvest reductions for the snapper-grouper fishery as a whole with associated adverse socioeconomic impacts. For all of these reasons, a waiver of the 30-day delay of effective date for these measures is necessary.

List of Subjects in 50 CFR Part 622

Fisheries, Fishing, Puerto Rico, Reporting and recordkeeping requirements, Virgin Islands.

Dated: November 30, 2010.

Samuel D. Rauch III,

Deputy Assistant Administrator for Regulatory Programs, National Marine Fisheries Service.

■ For the reasons set out in the preamble, 50 CFR part 622 is amended as follows:

PART 622—FISHERIES OF THE CARIBBEAN, GULF, AND SOUTH ATLANTIC

■ 1. The authority citation for part 622 continues to read as follows:

Authority: 16 U.S.C. 1801 *et seq.*

■ 2. In § 622.32, paragraph (b)(3)(vi) is added to read as follows:

§ 622.32 Prohibited and limited-harvest species.

* * * * *

(b) * * *

(3) * * *

(vi) Red snapper may not be harvested or possessed in or from the South Atlantic EEZ. Such fish caught in the South Atlantic EEZ must be released immediately with a minimum of harm. In addition, for a person on board a vessel for which a valid Federal commercial or charter vessel/headboat permit for South Atlantic snapper-grouper has been issued, the provisions of this closure apply in the South Atlantic, regardless of where such fish are harvested, *i.e.,* in State or Federal waters.

* * * * *

■ 3. In § 622.35, paragraph (l) is added to read as follows:

§ 622.35 Atlantic EEZ seasonal and/or area closures.

* * * * *

(l) *Area closure for South Atlantic snapper-grouper.* (1) No person may harvest or possess a South Atlantic snapper-grouper in or from the South Atlantic EEZ in the closed area defined in paragraph (l)(2) of this section, except a person harvesting South Atlantic snapper-grouper (*see* § 622.32(b)(3) for the current prohibitions on the harvest and possession of red snapper and other snapper-grouper species) with spearfishing gear or with a sea bass pot that has a valid identification tag issued by the RA attached, as specified in § 622.6(b)(1)(i)(B). This prohibition on possession does not apply to a person aboard a vessel that is transiting through the closed area with fishing gear appropriately stowed as specified in paragraph (l)(3) of this section.

(2) The area closure for South Atlantic snapper-grouper is bounded by rhumb lines connecting, in order, the following points:

Point	North lat.	West long.
A	28°00′00″	80°00′00″
B	28°00′00″	80°10′57″
C	29°31′40″	80°30′34″
D	30°02′03″	80°50′45″
E	31°00′00″	80°35′19″
F	31°00′00″	80°00′00″
G	30°52′54″	80°00′00″
H	30°27′19″	80°11′41″
I	29°54′31″	80°15′51″
J	29°24′24″	80°13′32″
K	28°27′20″	80°00′00″
A	28°00′00″	80°00′00″

(3) For the purpose of paragraph (l)(1) of this section, continuous transiting or transit through means that a fishing vessel crosses the area closure on a constant heading, along a continuous straight line course, while underway, making way, not anchored, and by means of a source of power at all times (not including drifting by means of the prevailing water current or weather conditions). Fishing gear appropriately stowed means—

(i) A longline may be left on the drum if all gangions and hooks are disconnected and stowed below deck. Hooks cannot be baited. All buoys must be disconnected from the gear; however, buoys may remain on deck.

(ii) A trawl or try net may remain on deck, but trawl doors must be disconnected from such net and must be secured.

(iii) A gillnet, stab net, or trammel net must be left on the drum. Any additional such nets not attached to the drum must be stowed below deck.

(iv) Terminal gear (*i.e.*, hook, leader, sinker, flasher, or bait) used with an automatic reel, bandit gear, buoy gear, trolling gear, handline, or rod and reel must be disconnected and stowed separately from such fishing gear. A rod and reel must be removed from the rod holder and stowed securely on or below deck.

(v) A crustacean trap or golden crab trap cannot be baited. All buoys must be disconnected from the gear; however, buoys may remain on deck.

(vi) Other stowage methods may be authorized by the Regional Administrator in the future. These would be published in the **Federal Register** and become effective at that time.

* * * * *

■ 4. In § 622.37, paragraph (e)(1)(v) is revised to read as follows:

§ 622.37 Size limits.

* * * * *

(e) * * *

(1) * * *

(v) Red snapper—20 inches (50.8 cm), TL, however, *see* ' 622.32(b)(3)(vii) for the current prohibition on the harvest and possession of red snapper.

* * * * *

■ 5. In § 622.39, paragraph (d)(1)(iv) and (d)(1)(viii) are revised and paragraph (d)(1)(ix) is added to read as follows:

§ 622.39 Bag and possession limits.

* * * * *

(d) * * *

(1) * * *

(iv) Snappers, combined—10. However, excluded from this 10-fish bag limit are cubera snapper, measuring 30 inches (76.2 cm), TL, or larger, in the South Atlantic off Florida, and red snapper and vermilion snapper. (*See* § 622.32(b)(3)(vii) for the prohibition on harvest and possession of red snapper and § 622.32(c)(2) for limitations on cubera snapper measuring 30 inches (76.2 cm), TL, or larger, in or from the South Atlantic EEZ off Florida.)

* * * * *

(viii) South Atlantic snapper-grouper, combined—20. However, excluded from this 20-fish bag limit are tomtate, blue runner, and those specified in paragraphs (d)(1)(i) through (vii), and (ix) of this section.

(ix) No red snapper may be retained.

* * * * *

■ 6. In § 622.41, the introductory text in paragraph (n) is revised and paragraph (n)(2) is added to read as follows:

§ 622.41 Species specific limitations.

* * * * *

(n) *Required gear in the South Atlantic snapper-grouper fishery.* For a person on board a vessel to harvest or possess South Atlantic snapper-grouper in or from the South Atlantic EEZ, the vessel must possess on board and such person must use the gear as specified in paragraphs (n)(1) and (n)(2) of this section.

* * * * *

(2) *Non-stainless steel circle hooks.* Non-stainless steel circle hooks are required to be used when fishing with hook-and-line gear and natural baits north of 28E N. lat.

■ 7. In § 622.45, paragraph (d)(10) is added to read as follows:

§ 622.45 Restrictions on sale and purchase.

* * * * *

(d) * * *

(10) No person may sell or purchase a red snapper harvested from or possessed in the South Atlantic, *i.e.,* State or Federal waters, by a vessel for which a Federal commercial permit for South Atlantic snapper-grouper has been issued.

* * * * *

[FR Doc. 2010–30394 Filed 12–3–10; 11:15 am]

BILLING CODE 3510–22–P

DEPARTMENT OF COMMERCE

National Oceanic and Atmospheric Administration

50 CFR Part 622

[Docket No. 101124587–0586–01]

RIN 0648–BA47

Fisheries of the Caribbean, Gulf of Mexico, and South Atlantic; Snapper-Grouper Fishery Off the South Atlantic States; Emergency Rule To Delay Effectiveness of the Snapper-Grouper Area Closure

AGENCY: National Marine Fisheries Service (NMFS), National Oceanic and Atmospheric Administration (NOAA), Commerce.

ACTION: Temporary rule; emergency action.

SUMMARY: NMFS issues this temporary rule to delay the effective date of the area closure for snapper-grouper specified in Amendment 17A to the Fishery Management Plan for the Snapper-Grouper Fishery of the South Atlantic Region (FMP). The area closure will become effective on January 3, 2011, through the final rule that implements Amendment 17A. A Southeast Data Assessment and Review (SEDAR) benchmark stock assessment for red snapper (SEDAR 24) was just completed on October 25, 2010, and was reviewed by the South Atlantic Fishery Management Council's (Council's) Scientific and Statistical Committee (SSC) during its meeting from November 9–11, 2010. The new stock assessment still shows red snapper to be overfished and undergoing overfishing, however, the rate of overfishing found in SEDAR 24 is less than the rate of overfishing found in the previous stock assessment (SEDAR 15). The SSC concluded that, based on SEDAR 24, the snapper-grouper area closure approved in Amendment 17A is more conservative that what is needed to end overfishing of red snapper. Temporarily delaying the effective date of the snapper-grouper area closure specified in Amendment 17A will allow the Council time to respond to the new stock assessment information through a regulatory amendment, which will be discussed at the Council's December meeting. This emergency action is necessary to mitigate negative socioeconomic impacts associated with the snapper-grouper area closure on South Atlantic snapper-grouper fishermen and to ensure the area closure is based upon the best scientific information available.

DATES: This rule is effective January 3, 2010 through June 1, 2011, unless NMFS publishes a superseding document in the **Federal Register**.

ADDRESSES: You may submit comments, identified by "0648–BA47", by any one of the following methods:

- *Electronic submissions:* Submit all electronic public comments via the Federal e-Rulemaking Portal *http://www.regulations.gov.*
- *Fax:* 727–824–5308. *Attn:* Kate Michie.
- *Mail:* Kate Michie, Southeast Regional Office, NMFS, 263 13th Avenue S., St. Petersburg, FL 33701.

Instructions: No comments will be posted for public viewing until after the comment period has closed. All comments received are a part of the public record and will generally be posted to *http://www.regulation.gov* without change. All Personal Identifying Information (for example, name, address, etc.) voluntarily submitted by the commenter may be publicly accessible. Do not submit Confidential Business Information or otherwise sensitive or protected information.

To submit comments through the Federal e-Rulemaking Portal: *http://www.regulations.gov,* enter ANOAA–NMFS–2010–0243" in the keyword search, then check the box labeled "Select to find documents accepting comments or submissions", then select "Send a Comment or Submission." NMFS will accept anonymous comments (enter N/A in the required fields, if you wish to remain anonymous). Attachments to electronic comments will be accepted in Microsoft Word, Excel, WordPerfect, or Adobe PDF file formats only.

Copies of the supporting documentation for this emergency rule, as well as Amendment 17A and its accompanying analyses, may be obtained from Kate Michie, Southeast Regional Office, NMFS, 263 13th Avenue S., St. Petersburg, FL 33701.

FOR FURTHER INFORMATION CONTACT: Kate Michie, telephone 727–824–5305; e-mail *Kate.Michie@noaa.gov.*

SUPPLEMENTARY INFORMATION: The South Atlantic snapper-grouper fishery is managed under the FMP. The FMP was prepared by the Council and is implemented by NMFS under the

authority of the Magnuson-Stevens Fishery Conservation and Management Act (Magnuson-Stevens Act) by regulations at 50 CFR part 622. The Magnuson-Stevens Act provides the legal authority for the promulgation of emergency regulations under section 305(c).

Background

A final rule to implement Amendment 17A to the FMP is published in the same issue of the **Federal Register** as this emergency rule. Amendment 17A contains measures to end the overfishing of red snapper and rebuild the stock. The management measures in the final rule include prohibiting the harvest and possession of red snapper in or from the South Atlantic exclusive economic zone (EEZ) (and in state or Federal waters for a vessel with a Federal commercial or charter vessel/headboat permit for South Atlantic snapper-grouper), requiring the use of non-stainless steel circle hooks when fishing for snapper-grouper species with hook and line gear north of 28° N. latitude in the South Atlantic EEZ, and implementing an area closure for South Atlantic snapper-grouper. The area closure includes 4,824 square miles (7,763 square km) off the coasts of southern Georgia and northeast Florida where the harvest and possession of snapper-grouper species would be prohibited, except when fishing with black sea bass pot gear or spearfishing gear for species other than red snapper. NMFS is delaying the effective date of this snapper-grouper area closure until June 1, 2011, with a possible 186-day extension, to provide the Council time to respond to new scientific information. Based upon the results of the SEDAR 24 benchmark stock assessment, this delay of the effective date of the snapper-grouper area closure will not impact the ending of overfishing of the red snapper stock.

The SEDAR 24 benchmark stock assessment for red snapper was completed on October 25, 2010. The assessment incorporated the high landings from recent years, as well as new scientific information regarding the availability of older red snapper to fishing gear, post-release mortality, and methodologies for estimating historic recreational landings. The new stock assessment was reviewed by the Council's SSC during its meeting from November 9–11, 2010. The SSC-endorsed model runs from the new stock assessment indicate that the snapper-grouper area closure could be modified without compromising the red snapper conservation objective of ending overfishing, while better minimizing the negative socio-economic effects on fishing communities.

Amendment 17A was approved by the Secretary of Commerce on October 27, 2010. A final rule implementing Amendment 17A will become effective on January 3, 2011, except for the prohibition on the harvest and possession of red snapper, which will become effective on December 3, 2010, and the circle hook requirement, which will become effective March 3, 2011. This emergency rule will delay the effective date of the snapper-grouper area closure until June 1, 2011, with a possible 186-day extension, unless superseded by subsequent rulemaking.

The delayed effective date of the snapper-grouper area closure will provide the Council time to respond to the new scientific information from the SEDAR 24 benchmark stock assessment through a regulatory amendment. The intended effect of this emergency action is to mitigate the negative socio-economic effects of the snapper-grouper area closure contained in Amendment 17A on snapper-grouper fishermen.

This emergency rulemaking meets the criteria and justifications for invoking emergency rulemaking procedures under section 305(c) of the Magnuson-Stevens Act and the NMFS policy guidelines for use of emergency rules (62 FR 44421, August 21, 1997). Specifically, the results of the new benchmark stock assessment for red snapper (SEDAR 24), which indicate the snapper-grouper area closure in Amendment 17A is more conservative than what is necessary to end overfishing of red snapper, are considered to be recent unforeseen and recently discovered circumstances. Because the snapper-grouper area closure is scheduled to take effect on January 3, 2011, the immediate benefits of mitigating the negative socio-economic impacts to snapper-grouper fishermen by delaying the effective date of the area closure through this emergency action justify waiving the requirement to provide advance notice and opportunity for public comment. This emergency action seeks to prevent significant direct economic loss to snapper-grouper fishermen, thus meeting the justification for emergency action.

Classification

The Administrator, Southeast Region, NMFS, determined that this temporary rule is consistent with the national standards and other provisions of the Magnuson-Stevens Act and other applicable laws. The rule may be extended for a period of not more than 186 days as described under section 305(c)(3)(B) of the Magnuson-Stevens Act.

The Assistant Administrator for Fisheries, NOAA, finds good cause pursuant to 5 U.S.C. 533(b)(B) to waive prior notice and the opportunity for public comment because it would be contrary to the public interest.

Unnecessary economic harm and negative social impacts will occur to fishery participants if this action to delay the implementation of the area closure is not enacted as quickly as possible. Notice and comment rulemaking would significantly reduce the effectiveness of this emergency action. The snapper-grouper area closure contained in the final rule for Amendment 17A will take effect January 3, 2011. Therefore, this emergency rule must be published and become effective on the same day as the snapper-grouper area closure in Amendment 17A. Otherwise the purpose of this emergency rule will be undermined. This emergency rule will delay the implementation of the area closure until June 1, 2011, with up to a 186-day extension, unless superseded by subsequent rulemaking. The Council is currently developing a regulatory amendment, which will be reviewed at its December 2010 meeting. New scientific information on red snapper became available in late October 2010, and the SSC reviewed this information in November 2010. Therefore, NMFS is making use of this new information in the interim, through this emergency action, while the Council develops a regulatory amendment and additional rulemaking over the long-term, which will include the new scientific information from SEDAR 24 and will consider less restrictive management measures to end overfishing of red snapper and rebuild the stock. If the regulatory amendment and any resulting rulemaking is approved, the public will be provided the opportunity to comment during notice and comment rulemaking for the regulatory amendment.

Pursuant to section 553(d)(1), the Assistant Administrator waives the 30-day delay in the effective date of this temporary rule, as required by 5 U.S.C. 553(d), because this rule relieves a restriction on snapper-grouper fishermen. This emergency action is being implemented to delay the effective date of the snapper-grouper area closure contained in Amendment 17A to the FMP. The snapper-grouper area closure would prohibit the harvest and possession of all snapper-grouper species, except when fishing with black sea bass pot gear or spearfishing gear for species other than red snapper, in an

area that covers 4,824 square miles (7,763 square km) off the coasts of southern Georgia and northeast Florida. The result of this waiver will be to reduce the economic costs that the final rule for Amendment 17A would otherwise create. An additional 30-day delay would undermine that intent.

This temporary rule has been determined to be not significant for purposes of Executive Order 12866.

This rule is exempt from the procedures of the Regulatory Flexibility Act because the rule is not subject to the requirement to provide prior notice and opportunity for public comment pursuant to 5 U.S.C. 553 or any other law.

List of Subjects in 50 CFR Part 622

Fisheries, Fishing, Puerto Rico, Reporting and recordkeeping requirements, Virgin Islands.

Dated: November 30, 2010.

Samuel D. Rauch III,

Deputy Assistant Administrator for Regulatory Programs, National Marine Fisheries Service.

■ For the reasons set out in the preamble, 50 CFR part 622 is amended as follows:

PART 622—FISHERIES OF THE CARIBBEAN, GULF, AND SOUTH ATLANTIC

■ 1. The authority citation for part 622 continues to read as follows:

Authority: 16 U.S.C. 1801 *et seq.*

§ 622.35 [Amended]

■ 2. In § 622.35, paragraph (l) is suspended.

[FR Doc. 2010–30682 Filed 12–3–10; 11:15 am]

BILLING CODE 3510–22–P

Federal Register

Thursday,
December 9, 2010

Part V

Election Assistance Commission

Publication of State Plan Pursuant to the Help America Vote Act; Notice

ELECTION ASSISTANCE COMMISSION

Publication of State Plan Pursuant to the Help America Vote Act

AGENCY: U.S. Election Assistance Commission (EAC)

ACTION: Notice.

SUMMARY: Pursuant to Sections 254(a)(11)(A) and 255(b) of the Help America Vote Act (HAVA), Public Law 107–252, the U.S. Election Assistance Commission (EAC) hereby causes to be published in the **Federal Register** changes to the HAVA state plans previously submitted by Rhode Island.

DATES: This notice is effective upon publication in the **Federal Register**.

FOR FURTHER INFORMATION CONTACT: Bryan Whitener, Telephone 202–566–3100 or 1–866–747–1471 (toll-free).

Submit Comments: Any comments regarding the plans published herewith should be made in writing to the chief election official of the individual state at the address listed below.

SUPPLEMENTARY INFORMATION: On March 24, 2004, the U.S. Election Assistance Commission published in the **Federal Register** the original HAVA state plans filed by the fifty states, the District of Columbia and the territories of American Samoa, Guam, Puerto Rico, and the U.S. Virgin Islands. 69 FR 14002. HAVA anticipated that states, territories and the District of Columbia would change or update their plans from time to time pursuant to HAVA Section 254(a)(11) through (13). HAVA Sections 254(a)(11)(A) and 255 require EAC to publish such updates. This is the second revision to the state plan for Rhode Island.

The amendments to Rhode Island's state plan provide for compliance with the Military and Overseas Voter Empowerment Act (MOVE Act) and address changes in the budget to account for the use of requirements payments for Fiscal Year 2010 and beyond. In accordance with HAVA Section 254(a)(12), all the state plans submitted for publication provide information on how the respective state succeeded in carrying out its previous state plan. Rhode Island confirms that its amendments to the state plan were developed and submitted to public comment in accordance with HAVA Sections 254(a)(11), 255, and 256.

Upon the expiration of thirty days from December 9, 2010, the state is eligible to implement the changes addressed in the plan that is published herein, in accordance with HAVA Section 254(a)(11)(C). EAC wishes to acknowledge the effort that went into revising this state plan and encourages further public comment, in writing, to the state election official listed below.

Chief State Election Official

Secretary A. Ralph Mollis, Secretary of State, State House Room 217, Providence, Rhode Island 02903, Phone: (401) 222- 2357, Fax: (401) 222–1356.

Thank you for your interest in improving the voting process in America.

Dated: December 1, 2010.

Thomas R. Wilkey,

Executive Director, U.S. Election Assistance Commission.

BILLING CODE 6820–KF–P

RHODE ISLAND STATE PLAN

HELP AMERICA VOTE ACT OF 2002 (HAVA)

SECOND REVISED AND UPDATED VERSION, 2010

A. Ralph Mollis
Secretary of State

STATE OF RHODE ISLAND AND PROVIDENCE PLANTATIONS
Office of the Secretary of State

July 19, 2010

Dear Rhode Islander:

As Secretary of State, I continue to be committed to making it easier to vote and restoring Rhode Island's faith in the fairness of our elections. I am pleased to present Rhode Island's Updated 2010 State Plan for continued enhancements to our state's voting system through the federal Help America Vote Act (HAVA). Congress passed HAVA in 2002, providing guidelines and funding to help states reform their elections and improves their voting systems.

Thanks to the work done by this office in recent years, Rhode Island's elections are among the most accessible, fair and accurate in the nation.

- Our **optical scan balloting** uses simple, easy-to-use ballots and provide fast and accurate automated vote counts as well as a crucial paper back-up system.
- New **accessible technology** in every polling place enables nearly every Rhode Islander to vote conveniently regardless of physical challenges.
- Our statewide **Centralized Voter Registration System** makes it simple to register and vote while ensuring the integrity of our voter rolls.

The major technical and legislative innovations in Rhode Island's original 2002 HAVA plan have now been fully implemented.
The challenge before us now is insuring that Rhode Island is in compliance with the Uniformed and Overseas Citizens Absentee Voting Act ("UOCAVA") and the Military and Overseas Voter Empowerment Act ("MOVE Act"). Section 14 of the Rhode Island State Plan details the accomplishments that we have already made over the years in working with the Federal Voting Assistance Program (FVAP) and it details our plans for further compliance with the MOVE Act mandates.

Sincerely,

A. Ralph Mollis
Secretary of State

Secretary of State A. Ralph Mollis

CONTENTS

INTRODUCTION 3

SECTION 1: TITLE III REQUIREMENTS AND OTHER ACTIVITIES 7

1.1. VOTING SYSTEMS STANDARDS REQUIREMENTS – §301(A) 7
1.2. PROVISIONAL VOTING AND VOTING INFORMATION REQUIREMENTS -- §302 11
VOTING INFORMATION REQUIREMENTS 11
1.3. COMPUTERIZED STATEWIDE VOTER REGISTRATION LIST REQUIREMENTS AND REQUIREMENTS FOR VOTERS WHO REGISTER BY MAIL – §303 12
1.4. MINIMUM REQUIREMENTS – §304 16
1.5. METHODS OF IMPLEMENTATION LEFT TO DISCRETION OF STATE – §305 16
1.6. ADOPTION OF VOLUNTARY GUIDANCE BY COMMISSION – §311 16
1.7. PROCESS FOR ADOPTION – §312 16
1.8. OTHER ACTIVITIES – §251 (B)(2) 17

SECTION 2. RHODE ISLAND'S DISTRIBUTION OF REQUIREMENTS PAYMENT 18

2.1 ELIGIBILITY OF LOCAL UNITS TO RECEIVE THE PAYMENT 18
2.2 PERFORMANCE MEASURES FOR LOCAL UNITS 18

SECTION 3. VOTER EDUCATION, ELECTION OFFICIAL EDUCATION AND TRAINING, POLL WORKER RECRUITMENT AND TRAINING 19

3.1 VOTER EDUCATION AND OUTREACH 19
3.2 ELECTION OFFICIAL EDUCATION AND TRAINING 20
3.3 POLL WORKER RECRUITMENT AND TRAINING 21

SECTION 4. VOTING SYSTEM GUIDELINES AND PROCESSES 22

SECTION 5. RHODE ISLAND'S HAVA FUND MANAGEMENT 23

SECTION 6. RHODE ISLAND'S HAVA BUDGET 24

SECTION 7. MAINTENANCE OF EFFORT 26

SECTION 8. HAVA PERFORMANCE GOALS AND MEASURES 27

SECTION 9. STATE-BASED ADMINISTRATIVE COMPLAINT PROCEDURE 30

SECTION 10. EFFECT OF TITLE I PAYMENTS 31

SECTION 11. RHODE ISLAND'S HAVA STATE PLAN MANAGEMENT 32

SECTION 12. CHANGES TO STATE PLAN FROM PREVIOUS FISCAL YEAR 34

SECTION 13. STATE PLAN DEVELOPMENT AND COMMITTEE 35

13.1 PUBLIC ENGAGEMENT 35
13.2 VOTERS FIRST ADVISORY COMMISSION 36

13.3 HAVA RHODE ISLAND ADVISORY COMMITTEE 36

SECTION 14. RHODE ISLAND COMPLIANCE WITH THE UNIFORMED AND OVERSEAS CITIZENS ABSENTEE VOTING ACT ("UOCAVA") AND THE MILITARY AND OVERSEAS VOTER EMPOWERMENT ACT ("MOVE ACT") 39

APPENDICES 48

TABLE I: SECTION 301. VOTING SYSTEMS STANDARDS I

TABLE II: SECTION 302. PROVISIONAL VOTING AND VOTING INFORMATION REQUIREMENTS VI

TABLE III. SECTION 303. COMPUTERIZED STATEWIDE VOTER REGISTRATION LIST REQUIREMENTS AND REQUIREMENTS FOR VOTERS WHO REGISTER BY MAIL XII

SECTION 14 FOOTNOTES XXXI

INTRODUCTION

This 2010 State Plan is the second revision of the *Rhode Island State Plan, Help America Vote Act of 2002 (HAVA).* This revision is largely a report of successful statewide implementation of the major reforms and enhancements of voting law and process required by Congress in the wake of controversial problems with key local elections during the Presidential election of 2000. Additionally, this update provides our current status and plans with respect to the requirements of the MOVE Act.

The individual chapters of this plan and the summary tables in the appendices show when Rhode Island met most of the key HAVA requirements and what we are now doing or will do to ensure permanent compliance.

But one critical measure of successful elections – the rate of voter participation – still requires considerable improvement across the United States and here in Rhode Island. Future resources and efforts under HAVA will be focused on bringing more eligible UOCAVA Rhode Island citizens to register and vote.

Background on HAVA

In 2002, the United States Congress, with broad bipartisan support, passed landmark election reform legislation known as HAVA. This historic legislation required states to reform numerous aspects of the way elections are run, and appropriated federal funding to help them meet these challenges. Secretary of State A. Ralph Mollis has posted a copy of this law at www.sos.ri.gov/elections/resources.

Rhode Island was a leader in election reform, long before the enactment of HAVA. Through the foresight of former Secretary of State and now U.S. Rep. Jim Langevin, Rhode Island put in place a unified, optical scan precinct count voting system for each of its 39 cities and towns that enables the state Board of Elections and our local boards of canvassers to conduct fair and accurate elections. Scanning technology makes counts fast and accurate. The use of paper ballots offers voters a simple and familiar way to vote and provides a reliable paper record of each vote. As a result, Rhode Island avoided the election problems experienced in other parts of the country during the 2000 and 2004 elections.

HAVA provided Rhode Island with a unique opportunity – and significant federal dollars – to realize elements of election system reform, which, until then, had been only a dream. Our original HAVA State Plan drew on the time and talents of 75 members of our HAVA Advisory Committee, which carefully assessed our state's current electoral practices and capacities against the HAVA requirements. The draft plan was publicly reviewed and discussed at meetings held throughout Rhode Island. The final plan was submitted in August 2003.

The Secretary of State shared statewide oversight and implementation responsibility with the Board of Elections. Boards of canvassers in each of our state's 39 cities and towns also played crucial roles.

HAVA implementation, 2003 to 2010

Between 2003 and 2010, Rhode Island successfully implemented all of the HAVA requirements, most notably, a central, statewide database of voter registrations and new systems to strengthen the integrity of the voting process while also ensuring that every eligible voter will be able to cast a vote.

By December 2004, we had developed and implemented a powerful election tool – a statewide, uniform, computerized, interactive, central voter registration list known as the **Central Voter Register System** (CVRS). By linking cities and towns into a statewide network, the CVRS allows Rhode Island to maintain a highly accurate, up-to-date voter registration list. The CVRS enables election officials to ensure that those who are eligible to vote are able to vote and those who are not eligible to vote do not. This system was completely deployed and operational in all 39 towns in December 2004.

To meet HAVA mandates, the Board of Elections also established and put into place a system for **new identification requirements for voters.** At the same time, new **provisional voting** rules enable individuals whose exact status or voting address is unclear to cast a vote which will be counted when and if their eligibility is established.

HAVA also mandates that Rhode Island provide voters who are physically challenged with accessible voting systems that provide the same opportunity for access, participation, privacy and independence afforded to other voters. As planned, every polling place in the state was equipped with an **accessible voting unit** by 2006.

All Rhode Islanders should be proud of the progress our state has made since our first HAVA State Plan was filed in 2003. Rhode Island has now met the requirements of the federal law.

These enhancements were made possible thanks to more than $17 million in federal HAVA funding through the end of 2007. But, they could not have been achieved without a statewide commitment to meet the requirements of HAVA within a few short years.

Our success resulted from the hard work and dedication of many partners: the Secretary of State, local boards of canvassers, the General Assembly, the Governor and State Officers, our political parties and voters. However, we must particularly credit the Board of Elections for drafting the legislation and regulations and conducting the training for local election officials and volunteers that translated this plan to reality.

With these essential systems in place, our state has met all of the HAVA requirements. We will now monitor, maintain and enhance our system to continue to meet and, where possible, exceed, HAVA requirements.

Improving the integrity of elections

One of our primary goals continues to be educating the people who are involved:, our **election officials**, our **poll workers** and our **Rhode Island citizens**.

That work has already begun. In 2007,Secretary of State Mollis appointed a ten-member Voters First Advisory Commission to review and reform the state's election laws. With testimony at five public hearings and deliberation at eleven public workshop sessions, the Commissioners developed thoroughly researched positions on nine specific issues. Several recommendations focused on the integrity of the process, including increased voting booth privacy, restrictions on political canvassing at polling places and cleaning up voter rolls. Other reforms promoted expanded access for citizens with early voting initiatives, uniform statewide polling hours and expanded opportunities to register to vote. In 2009 legislation was enacted to assist us in cleaning up voter rolls by allowing us to send reminder notices to graduating college students concerning their voter registration statuses.

We will **improve training** for front-line workers – both **election officials and poll workers --** who must be well versed in the new systems and procedures. New partnerships with businesses, schools and civic organizations will emerge to recruit a larger and more diverse pool of qualified poll workers, including people in high school and college. We have added a module to the CVRS that tracks poll workers so that they can be located and recruited for future elections.

The critical element underlying all of these changes is our commitment to continue to increase **civic participation in elections**. 701,307 Rhode Islanders were registered and eligible to vote in the 2008 election, and 68% exercised that right,, an increase of 10.5% over the 2006 turnout.. The Board of Elections and the Secretary of State have jointly developed comprehensive voter education for youth and are bringing that curriculum to every high school and college in the state.

Rhode Island has carefully reviewed the requirements of the 2009 enacted Military and Overseas Voters Empowerment Act. While we have been committed to assisting UOCAVA Voters in their efforts to cast a ballot, we find that we have already met many of the mandates of the MOVE Act. We will continue to ensure that we meet these mandates and we will work diligently to reach our remaining MOVE Act goals.

Section 14 of this Plan will detail our accomplishments and goals with respect to: Clarification of State Responsibilities; Transmitting Voter Registration Application and Absentee ballot Applications; Designating a Means of Electronic Communication; Transmitting Blank Ballots;

Ballot Tracking Mechanism; Accepting UOCAVA ballot materials; Single Application for Multiple Elections; Ballot Transmittal Time; Runoff Election Plan; and Requirements Payments

Rhode Island's future challenge will be to make the voting experience as important, accessible, secure and rewarding as possible for every voter, with a clear and concise plan in place for assisting our Rhode Island UOCAVA voters.

SECTION 1: TITLE III REQUIREMENTS AND OTHER ACTIVITIES

How the State will use the requirements payment to meet the requirements of Title III, and, if applicable, under section 251(b)(2), to carry out other activities to improve the administration of elections. – HAVA §254 (a)(1)

1.1. VOTING SYSTEMS STANDARDS REQUIREMENTS – §301(A)

Deadline for compliance: January 1, 2006: no waiver permitted.
Status as of 2010: FULLY MET

With great foresight, Rhode Island enacted legislation (Chapters 277 & 298 of Public Laws of 1996) that mandated the statewide use of a uniform, optical scan precinct count voting system. Since September 1998, this optical scan precinct count voting system (OpTech III-PE, "Eagle" voting system) has been in use for all elections at all polling places in the 39 cities and towns which make up the State of Rhode Island (the State).

The State's optical scan precinct count voting system already met most of the requirements under Section 301 of HAVA. Specifically:

- Voters can verify, in private, their selected votes on the ballot before their vote is cast and counted
- Voters can change their ballots or correct any error before the vote is cast and counted, including the opportunity to receive replacement ballots
- The optical scan system automatically notifies voters if they have selected more than one candidate for the same office, a warden/moderator informs them of the effect of their over-voting and the voters are given the opportunity to correct their errors before their votes are cast
- A permanent paper record with a manual audit capacity is produced and available for recount
- The system has the ability for an alternative language
- The error rate meets federal standards

In our HAVA planning, we fully assessed other voting equipment options, with particular attention to the Direct Recording Election (DRE) voting systems in use in many states. In the end, the State determined that the optical scan equipment in place was superior to DRE and should be retained.

Voting Instructions for Mail Ballots
Currently, the Secretary of State provides ballots and printed voter information to voters who vote by mail. The staffs of the local boards of canvassers, the Board of Elections and the Secretary of State's Elections Division are available by phone to provide one-on-one information to mail voters.

Our biennial Voter Information Handbook has been updated to include new instructions to voters who vote by mail. The new instructions include information on the effect of casting multiple votes for the same office and how to correct a ballot before it is cast, including instructions on how to obtain a replacement ballot.

Uniform, Nondiscriminatory Standards for What Constitutes A Vote
In 2002, the Board of Elections adopted rules and regulations that defined what constituted a "vote" on the State's optical scan precinct count voting system. Those definitions were codified by Rhode Island General Law (RIGL) 17-19-1, which was passed by the Rhode Island General Assembly on July 7, 2004. In the now unlikely event that other voting systems are implemented, the Board of Elections will take the steps necessary to ensure that a uniform and nondiscriminatory definition of a "vote" is adopted in conformance with the requirements of HAVA.

Accessibility for Individuals with Disabilities - Equipment
HAVA requires that by January 1, 2006, the State must have had, in each polling place, at least one voting system that:

- Is accessible to individuals with disabilities
- Provides the same opportunity for access, participation, privacy and independence that is afforded to other voters

In 2002, the State enacted RIGL 17-19-8.2 directing the Secretary of State to acquire such an accessible system for every Rhode Island polling place. Upon assessment of available systems, the State used HAVA funding to acquire and install two "AutoMark" systems for every polling place in time for the 2006 election.

AutoMark works in conjunction with the State's existing optical scan system, actually marking a conventional paper ballot and thus maintaining the paper ballot trail that Rhode Islanders strongly prefer. The system provides a range of input options and accommodations for many voter needs, such as sip-puff tubes, audio activation, text enlargement and support for multiple languages. The system reads back and confirms the voter's choices before counting.

During the AutoMark system's first use in the 2006 election, blind persons experienced technical difficulties using the system in many polling places in Rhode Island and other states. We have added training for poll workers and technical retrofits of the equipment that addressed and minimized those problems for the 2008 election.

Accessibility for Individuals with Disabilities – Polling Places
Rhode Island General Laws require every polling place to be accessible to the disabled and elderly. With the implementation of the optical scan precinct count voting system in 1998,

new efforts were made that resulted in all polling places meeting required polling place accessibility standards by November 2000.

Under HAVA, the U.S. Dept. of Health and Human Services (HHS) made grants available to the states to ensure full access for individuals with disabilities. These funds were awarded and accounted for separately from direct HAVA funding.

The Governor's Commission on Disabilities, as the official designee of the Chief State Election Official, prepared Rhode Island's State Grant for Election Assistance for Individuals with Disabilities (EAID) and secured federal grants of $100,000 each in the years 2003 through 2009 for a total of $600,000.

Information on activities below is taken from the HAVA EAID application for2010.

To date, expenditures by category of allowable expenditure have been

Category	1. Polling Place Access	2. Equal Opportunity	3. Train Election Officials	4. Information on Accessible Elections	Total Spent
Amount Spent	$162,058	$4,988	$15,976	$97,577	$280,600

Polling Place Access Expenditures:

- Assisted and will continue to assist local boards in choosing accessible sites and encouraging community-based providers of services to people with disabilities to offer their sites as polling places
- Surveyed and will continue to survey potential new polling sites on an as-needed basis to certify compliance with the HAVA accessibility guidelines
- Providing technical assistance in designing the removal of any barriers to access found at the polling sites
- Awarded and will continue to award grants to local boards of canvassers to fund accessibility renovations at polling places
- Monitored and will continue to monitor the renovations to ensure compliance with the U.S. Dept. of Justice's Americans With Disabilities Act Checklist for Polling Places, through either permanent renovations or temporary solutions for election days.

Equal Opportunity Allowable Expenditures:

- Continue funding the RI Disability Vote Project to:
  - Provide outreach about polling place accessibility, availability and opportunity to people with disabilities throughout the state

  - Conduct a public awareness campaign to help voting awareness among people with disabilities
  - Recruit and train people with disabilities to serve as poll workers
- Maintained and will continue to maintain the Election Assistance Committee of the Governor's Commission on Disabilities as an advisor to the Governor's Commission on Disabilities, the RI Disability Law Center, the Secretary of State and the Board of Elections' ongoing attempts to ensure polling site accessibility and greater participation by people with disabilities in the electoral process. The Committee includes representatives from the state Dept. of Administration (DOA), Office of Personnel Administration; National Federation of the Blind of RI; Opportunities Unlimited for People With Differing Abilities, Inc; state Dept. of Human Services, Office of Rehabilitation Services; the Secretary of State; RI Disability Law Center; Board of Elections; state Commission on the Deaf and Hard of Hearing; state Dept. of Human Services, Assistive Technology Access Partnership; CranstonArc and RI Disability Vote Project.

Train Election Officials Allowable Expenses

The Governor's Commission on Disabilities, the RI Disability Law Center and the Board of Elections developed a poll worker training video that will be used by the Board of Elections to train election officials and poll workers. EAID funds were used to revise the training video to better prepare officials and workers to meet the needs of the diverse universe of voters including persons with disabilities. In 2010 the Governor's Commission on Disabilities and the State Board of Elections continue to work toward improving ways to distribute the poll worker training video while the State Board continues to use its contents as part of their poll working training.

Information on Accessible Elections Allowable Expenses

With EAID funding, the Governor's Commission on Disabilities will continue funding the RI Disability Vote Project to:

- Provide outreach about polling place accessibility, availability and opportunity to people with disabilities throughout the state
- Conduct a public awareness campaign to help voting awareness amongst people with disabilities
- Develop training modules to be used by consumer organizations and providers of services for people with disabilities to better prepare people with disabilities to vote independently and in secret
- Recruit and train people with disabilities to serve as poll workers.

The Rhode Island Disability Law Center provides technical assistance to the RI Disability Vote Project and is a dues paying member.

1.2. PROVISIONAL VOTING AND VOTING INFORMATION REQUIREMENTS -- §302

Deadline for compliance: January 1, 2004; no waiver permitted.

Status as of 2010: FULLY MET

Provisional Voting

The intent of **provisional voting** is to ensure that no individual who goes to the polls intending to cast a ballot is turned away without having the opportunity to do so. Under HAVA, individuals who believe they are registered, but are not on the certified voting list must be allowed to vote using a provisional ballot. Once the appropriate state or local election official verifies that the individuals are eligible to vote under state law, the provisional ballots are counted. The state or local election official must also create a free access system which allows individuals who cast provisional ballots to verify whether their votes were counted, and if not, the reason they were not counted.

Rhode Island now meets HAVA requirements for provisional voting.

During its 2003 session, the Rhode Island General Assembly adopted RIGL 17-19-24.1 to bring the State into compliance with HAVA §302 requirements. This legislation instructs the Board of Elections to promulgate the rules and regulations for Provisional Voting in accordance with HAVA. The Board of Elections adopted appropriate regulations on August 23, 2006 and re-filed them on January 3, 2007. The Board of Elections updated them again in 2008.

Board of Elections regulations provide that provisional votes shall be held in sealed envelopes pending verification of the voter's registration via the CVRS, which accurately registers and records the disposition of the vote (fully counted, partly counted or disallowed). The Board of Elections enables voters to view the disposition of their ballots at www.ri.gov/election/provisional_ballots.

Voting Information Requirements

At the time HAVA was enacted in 2002, Rhode Island law already met most of the HAVA §302 provisions. The State currently meets all of the requirements for providing voter information.

The Board of Elections packages and delivers election supplies for each voting district to local election officials. Information on state and federal laws on voter fraud and misrepresentation is posted in all polling places on Election Day. The public is also notified of the date, time and location of polling places in advance of all elections, either through postings in public places or postings in the local newspaper. Outside each polling place is a clearly marked sign, conspicuous and visible from the street, indicating the location of the polling place.

Information on all new procedures, such as provisional voting or access to AutoMark voting machines is also posted. Information is made available to the public through the *How to Register and Vote* guide and the *Voter Information Handbook* updated and re-issued by mail to every registered voter before every election. Complete registration and voting information is also posted at www.elections.state.ri.us.

1.3. COMPUTERIZED STATEWIDE VOTER REGISTRATION LIST REQUIREMENTS AND REQUIREMENTS FOR VOTERS WHO REGISTER BY MAIL – §303

Status as of 2010: FULLY MET

RIGL 17-9.1-6 mandates the State to *"administer a single and unified system of voter registration in accordance with all state and federal laws which shall enable duly registered voters to vote in all elections in their respective voting districts including elections for federal office."* All new systems implemented to bring Rhode Island into compliance with HAVA requirements will ensure the continuation of a single and uniform voter registration system for in-person and mail registration as well as for all federal, state and local elections.

Computerized Statewide Voter Registration List

For Rhode Island, the HAVA offered opportunity to implement a computerized, uniform, centralized, interactive, statewide voter registration database. For years Rhode Island had recognized the need for this system, but until the passage of HAVA, the State did not have the resources to create the uniform, centralized CVRS to enable election officials to ensure that those who are eligible to vote are able to vote and that those who are not eligible to vote do not.

Prior to HAVA, all official voter registration records were maintained at the local level. While the Secretary of State maintained a central list of all persons registered to vote in Rhode Island, this list was not immediately and electronically available to the local boards of canvassers or other statewide and local election officials. In 2002, the State adopted RIGL 17-6-1.2, directing the Secretary of State to create a CVRS in anticipation of the opportunity HAVA would create.

With the authorization of HAVA funding, the Secretary of State immediately began the procurement process for a computerized statewide voter records system.

The specifications for Rhode Island's CVRS were developed by a task force of users and election officials. The Board of Elections and members of the public formed the technical review committee. The State was granted a two-year extension of the original HAVA deadline of Jan. 1, 2004. However, by December 2004, the system was in place.

Today, thanks to HAVA and the efforts of state officials:

- Rhode Island has a single, uniform, official, centralized, interactive computerized statewide voter registration list – the CVRS – defined, maintained and administered at the state level
- The CVRS is now the official voter registration list for the conduct of all federal, state and local elections
- The CVRS contains the name and registration information of every legally registered voter
- Every legally registered voter has been assigned a unique identifier for the CVRS
- The CVRS is the single system for storing and managing the official list of registered voters throughout the state
- The CVRS is coordinated with the state Division of Motor Vehicles (DMV) database and will soon be coordinated with other state agency databases
- Election officials have immediate access to the information contained in the CVRS
- Local election officials update all voter registration information in the CVRS on an expedited basis
- The State provides support as needed so that local election officials are able to enter information and produce voter registration lists when needed
- Maintenance is performed on this computerized list on a regular basis:
    - Ineligible voters are removed in accordance with the National Voter Registration Act
    - In accordance with RIGL, the State works in partnership with the state Dept. of Corrections (DOC) to remove from the voting lists felons who are serving time in prison for felony convictions. In addition, the State works in partnership with the DOC and the state and federal judiciaries to make voter registration available to felons upon their releases from prison, even if on probation or parole
    - The State is in the process of coordinating with agencies that record vital statistics for death records to remove deceased voters
    - List maintenance ensures that the name of each registered voter appears on the computerized list
    - Only individuals who are not registered or who are not eligible to vote are removed from the computerized list
    - Duplicate names are eliminated from the computerized list
- State and local election officials have now provided adequate technological security measures to prevent unauthorized access to the computerized list
- The CVRS includes provisions to ensure that voter registration records are accurate and updated regularly, including:
    - A system of file maintenance that removes registrants who are ineligible to vote, i.e. in accordance with the National Voter Registration Act (NVRA), those individuals who have not responded to a notice and have not voted in two consecutive federal elections
    - Safeguards to insure that eligible voters are not removed in error
    - Voter registration information is verified in accordance with HAVA requirements

The Secretary of State has provided local boards of canvassers with all hardware, software and training that they need to participate in the CVRS. The Secretary of State has also provided the Board of Elections, other state agencies and the public access to the CVRS database as appropriate, in accordance with State law and subject to the applicable privacy provisions for the *HAVA-Mandated Identifier* (see next section).

The Secretary of State has also further enhanced the electoral process with additional modules related to the CVRS. These include the immediate electronic transmittal and statewide access to:

- Voter registrations completed at the Division of Motor Vehicles
- Mail ballot processing
- Maintenance of all polling places
- Maintenance of nomination and candidate records
- Street file
- Voter history, including name and address change and redistricting

Special Provisions for Voter Registration Information

HAVA mandates that an application received by mail for first-time voter registration for any election for federal office may not be accepted or processed by the State unless the application includes at least one of the following forms of ID:

- The voter's valid driver's license number, if the voter has a driver's license
- For those voters who do not have a current and valid driver's license, the last 4 digits of the voter's social security number (SSN)
- A unique identifier assigned by the CVRS in those cases where the voter does not have either a valid driver's license or a SSN

To meet this requirement, the CVRS maintains two unique numbers for every registered voter in Rhode Island:

- A *State Voter Identification Number*, automatically assigned by the system, which will be part of the public record
- A *HAVA-Mandated Identifier* (driver's license number, last four digits of SSN or unique identifier), which will be protected from public view

This allows the State to both verify the accuracy of information provided in accordance with Section 303 requirements and protect the privacy of personal information. State statutes were amended to ensure privacy protections for the HAVA-Mandated Identifier.

In order to verify the accuracy of the information provided on applications for voter registration, the Secretary of State and the DMV now match the information in the CRVS with information at the DMV.

The Social Security Administration (SSA) agreed to verify the accuracy of social security numbers, dates of birth and names provided with voter registrations through the DMV and to screen those individuals against the death records. Those procedures were in place in time for the pre-election statewide mailing to Rhode Island voters in March 2006.

As required by HAVA, the DMV is seeking an agreement with the SSA to verify the accuracy of information provided by DMV for those applications for voter registration on which the last four digits of a SSN were provided instead of a driver's license number. The information that will be verified includes:

- The name, date of birth and social security number of an individual given to the SSA to match the information on file with the SSA
- If such individual is shown on the records of the SSA as deceased

Changes to voter registration forms now must be reviewed by the Secretary of State to ensure compatibility with the CVRS and ongoing compliance with HAVA requirements.

Requirements for Voters Who Register by Mail

The mail-in voter registration process in Rhode Island now meets HAVA §303 requirements for voter identification or voter instructions. Beginning January 1, 2003, voters who register by mail who did not provided their driver's license number or SSN upon registering and have not previously voted in an election for federal office in the state must present identification either at the time of registration or at the time of first voting. The new first-time voter must present this identification either with the mail registration, at the polls on Election Day, or with the mail ballot if the voter chooses to vote by mail.

An individual will meet this requirement upon presenting either:

- A valid photo identification
- A copy of a current utility bill, bank statement, government check, paycheck or other government document that shows the name and address of the voter

Rhode Island will modify its mail registration and voter information to notify new voters of the identification requirements of HAVA. The CVRS will be designed to support and track compliance with HAVA identification requirements.

The State will modify the voter registration form and polling place voter qualification processes to allow for the verification of identification provided by first-time voters who were registered by mail.

To comply with HAVA requirements, the Board of Elections changed the mail registration form by the statutory deadline to include the required citizenship and age question.

- Additionally, a statement was included on the registration form informing the individual that if the form is submitted by mail and the individual is registering for the first time, the appropriate information required must be included in order to avoid additional identification requirements upon voting for the first time

1.4. MINIMUM REQUIREMENTS – §304

The requirements laid out in HAVA are minimum requirements. The State may establish election technology and administrative requirements that are more stringent. Any more stringent requirement that the State imposes must comply with all Title III requirements, as well as the laws described in HAVA §906.

Since 1996, state law mandates uniformity in statewide voting systems and the administration of a single and unified system of voter registration in accordance with all state and federal laws. Therefore, Rhode Island legislation in these two areas could be considered more rigorous than HAVA. The State will continue to ensure uniformity in all State voting and voter registration systems for all federal, state and local elections. These uniform systems will be in full compliance with all HAVA requirements and with the relevant laws listed in HAVA §906.

1.5. METHODS OF IMPLEMENTATION LEFT TO DISCRETION OF STATE – §305

The State chose various means to comply with the requirements of HAVA Title III. Specific details on the implementation methodology chosen can be found in Sections 1.1. through 1.3 of this State Plan.

1.6. ADOPTION OF VOLUNTARY GUIDANCE BY COMMISSION – §311

Once the federal Election Assistance Commission (EAC) has issued its voluntary recommendations with respect to Title III, the State will consider that guidance in updating the State Plan. The State welcomes this assistance and will incorporate those recommendations deemed appropriate into subsequent versions of the State Plan.

1.7. PROCESS FOR ADOPTION – §312

The State will stay aware of the progress of the EAC in developing the Title III recommendations. If appropriate, the State will provide feedback during the public comment

period after the recommendations are published in the Federal Register and participate in public hearings regarding the recommendations.

1.8. OTHER ACTIVITIES – §251 (B)(2)

The State shall use HAVA requirements funding to meet Title III requirements. In the event that the State has completely implemented the requirements of Title III, future State Plans will be amended to include how requirements funding shall be used for other activities to improve the administration of elections for federal office in keeping with the conditions of this section.

SECTION 2. RHODE ISLAND'S DISTRIBUTION OF REQUIREMENTS PAYMENT

How the State will distribute and monitor the distribution of the requirements payments to units of local government or other entities in the State for carrying out the activities described in paragraph (1), including a description of:

> *(A) the criteria to be used to determine the eligibility of such units or entities for receiving the payment, and*
> *(B) the methods to be used by the State to monitor the performance of the units or entities to whom the payment is distributed, consistent with the performance goals and measures adopted under paragraph (8). – HAVA §254 (a)(2)*

2.1 ELIGIBILITY OF LOCAL UNITS TO RECEIVE THE PAYMENT

In Rhode Island, the State is responsible for the procurement, maintenance, preparation, delivery and storage of all optical scan precinct count voting systems used by local boards of canvassers in all federal, state and local elections. The State is responsible for the administration of a single, uniform voter registration system for all in person and mail registrations and for all federal, state and local elections. This centralized system provides for improved efficiency of elections.

In keeping with these practices, the State will continue to use HAVA funds to:

- Provide services and materials to local boards of canvassers as needed to meet HAVA requirements
- Support other activities to improve the administration of elections as described in HAV

HAVA funds will be centrally managed by the Secretary of State to ensure compliance with HAVA requirements and the State fiscal control systems.

2.2 PERFORMANCE MEASURES FOR LOCAL UNITS

The State monitors HAVA funds in accordance with the statewide performance measures adopted under HAVA §254(a)(8) and as outlined in Section 8 of this State Plan. The Secretary of State will centrally manage the distribution of all funds appropriated to the Rhode Island HAVA Election Fund, including but not limited to the requirements payments. Priorities and timelines will be incorporated into the budgeting process so that Rhode Island will implement mandates and improvements in a wise and timely manner.

SECTION 3. VOTER EDUCATION, ELECTION OFFICIAL EDUCATION AND TRAINING, POLL WORKER RECRUITMENT AND TRAINING

How the State will provide for programs for voter education, election official education and training and poll worker training which will assist the State in meeting the requirements of Title III. – HAVA §254(a)(3)

Status as of 2010: FULLY MET

Throughout the preparation of the State Plan, Rhode Islanders strongly urged the State to develop improved education and training programs for current, potential and future voters; for election officials and for poll workers. A well-informed electorate, supported by well-trained and voter-oriented election officials, is essential – not only for the successful implementation of HAVA requirements, but to improve voter participation in the electoral process.

In redesigning its training and education programs, the State standardized election terms to make information and training easier to understand and more accessible to more audiences.

3.1 VOTER EDUCATION AND OUTREACH

The Secretary of State has pursued a vigorous program of outreach, with particular attention to students. From 2008 through June 2010, the Secretary of State conducted 41 voter registration drives at Rhode Island high schools; 19 drives at colleges; along with 7 school-based mock elections. Additionally, the Secretary of State conducted voter registration drives at 10 citizenship ceremonies and 17 workplaces. Registration and voter information was promoted at eight events at colleges, hospitals, business expos and other venues and the AutoMark accessible voting equipment was demonstrated at 17 venues during this period.

The Secretary of State also produces the following educational materials which are posted on our website and available to the public:

- *How to Register and Vote* - explains voters' rights, the mechanics of how to vote, highlights the importance of voting and motivates people to engage in the democratic process by voting.
- *Election Calendar* - makes voters aware of all the key dates in the annual election calendar including the deadlines for registering to vote and disaffiliating
- *How to Run for Office Guide* - encourages voters to run for office by clearly explaining all the steps necessary to become a candidate

As required by HAVA, the Board of Elections now ensures that the following materials are posted at each polling place:

- Sample ballots to be used in the election at each polling place
- Instructions on how to vote

- General information on federal and state laws regarding fraud and misrepresentation
- Date and hours during which the polling place will be open
- Instructions for mail-in registrants and first-time voters under Section 303(b)

- General information on voting rights under federal and state laws, including information on how to cast a provisional ballot and instructions on how to contact the appropriate officials if these rights are alleged to be violated

Rhode Island recognizes the need to ensure that voter information is uniform, that it is communicated in plain and easily understood wording and that it must be accessible to individuals in the variety of ways necessary to ensure widespread inclusion

Rhode Island set three goals for public outreach and education programs in its 2003 State Plan:

- Assure that voters are informed of their rights and receive proper and timely instructions on how to vote in accordance with HAVA requirements
- Improve voter education and information materials and delivery systems
- Motivate individuals to exercise their democratic responsibility to register and vote

The Secretary of State has implemented comprehensive voter education and outreach programs in every election since 2004. Elements have included:

- Broadcast public service announcements urging people to vote and publicizing the voter information hotline for voter-related questions
- Use of diverse media and content to promote registration and voting for different needs within the electorate:
  - Promoting uniform terminology in all materials
  - Bus, broadcast, print and web materials
  - Simple and direct language in voter education materials in English and Spanish
  - Considering the special needs of voters with disabilities.
- The Secretary of State reached out to youth, military voters and the general public in partnership with Campus Compact of Rhode Island, non-profit organizations and corporate citizens that allowed his staff to reach out to their patrons
- A toll-free voter information hotline to help Rhode Island voters find their polling locations and understand the electoral system

3.2 ELECTION OFFICIAL EDUCATION AND TRAINING

As a result of HAVA mandates, local election officials needed to learn new voter registration systems and procedures and are now responsible for ensuring compliance with many new requirements.

Training was provided to election officials in all HAVA mandates, including:

- The use of all voting equipment including optical scans and AutoMark
- CVRS
- Registration requirements
- Provisional voting
- Voting by mail ballot
- Voting on election day
- Other applicable state and federal election laws

3.3 POLL WORKER RECRUITMENT AND TRAINING

During public hearings to develop the State Plan, local election officials as well as voters expressed the need for improved poll worker recruitment and training. Rhode Island has been chronically challenged by its ability to recruit a sufficient number of qualified poll workers for the conduct of elections.

The changes under HAVA required that poll workers be well-versed in these new and sometimes complex requirements, especially voter identification requirements, provisional voting and the use of standard and AutoMark voting equipment. Poll worker training is the responsibility of the Board of Elections

From 2003 onward, numerous innovations in poll worker training were introduced. The Secretary of State and the Board of Elections now routinely hold training and refresher training on changes in the law.

In 2004, the Rhode Island General Assembly passed H-8033 and S-2856, which expanded the pool of eligible voters qualified to serve as poll workers and provided for the earlier appointment of poll workers. This enables election officials to better identify those precincts where poll worker shortages exist and to recruit additional persons to fill the vacancies. These bills became effective without the Governor's signature.

Much remains to be done. Following statewide hearings last year, Secretary of State A. Ralph Mollis' Voters First Advisory Commission made the following recommendations:

- Standardize compensation for poll workers statewide (legislation required)
- Create regional poll worker training centers
- Provide hands-on training with voting equipment
- Create web-accessible training videos for review purposes (not training)
- Provide poll workers with access to computers for training reviews
- Limit the number of hours each poll worker must serve on election day
- Create a standard manual including "problem solver" sections for all poll workers
- Require post-election evaluation of poll-worker performance and develop steps to help those encountering difficulty improve
- Require each city and town to send at least six poll workers per election precinct to Board of Elections training and to send at least 10% of the total number of poll workers for training so they may act as replacements and provide relief for poll workers on election day

3.4 PRE-REGISTRATION OF 16 YEAR OLDS

During the 2010 session of the General Assembly, legislation was introduced and passed allowing 16 year olds to "pre-register" to vote by using the regular voter registration forms. These 16 and 17 year olds who will not be 18 by the next general election are sent notices indicating their pre-registration status. Thirty days before they turn 18, they are sent the regular voter registration acknowledgement notice and their voting status becomes active.

We anticipate that this pre-registration process will engage the youth in our community in the events and steps in the electoral process and will help create registered voters who are informed and interested in participating in the electoral process on all levels.

SECTION 4. VOTING SYSTEM GUIDELINES AND PROCESSES

How the State will adopt voting system guidelines and processes that are consistent with the requirements of Section 301. – HAVA §254 (a)(4)

Status as of 2010: FULLY MET

With the adoption of Chapters 277 & 298 of Rhode Island Public Law of 1996 and the implementation of the optical scan precinct count voting system in 1998, Rhode Island voting systems already met most HAVA requirements listed in Section 301.

Where Rhode Island was not in compliance, the State adopted internal procedures or legislation to come into compliance, specifically:

- The adoption of uniform and nondiscriminatory standards. RIGL 17-19-1 enacted on July 7, 2004 defines what constitutes a vote and what will be counted as a vote for each category of voting system used in the state
- Modified printed instructions and voter education for mail ballots explaining the effect of casting multiple votes and instructing the voter how to correct errors, including how to receive a replacement ballot if necessary

SECTION 5. RHODE ISLAND'S HAVA FUND MANAGEMENT

How the State will establish an election fund described in subsection (b) for purposes of administering the State's activities under this part, including information on fund management. – HAVA §254 (a)(5)

Status as of 2010: FULLY MET

In accordance with state law and in coordination with the DOA, the Secretary of State established the Rhode Island HAVA Election Fund (Fund) within the State's treasury whose appropriations are accounted for separately within the State accounting system. The DOA created accounting structures to ensure federal fund receipts and expenditures, the 5% State match and Fund interest are tracked separately from all other state funds as required under HAVA.

The Fund consists of the following:

- Amounts appropriated or otherwise made available by the State for carrying out the activities for which the requirements payment is made to the State under this part
- The requirements payment made to the State
- Other amounts as may be appropriated under law
- Interest earned on deposits of the Fund

The Secretary of State formed a HAVA Election Fund Management Committee to advise on and review the budget in connection with the original 2003 HAVA State Plan. That Committee approved the multi-year budget for full HAVA implementation. The Secretary of State has had responsibility for day-to-day management of the Fund since 2003.

SECTION 6. RHODE ISLAND'S HAVA BUDGET

The State's proposed budget for activities under this part, based on the State's best estimates of the costs of such activities and the amount of funds to be made available, including specific information on –

(A) the costs of the activities required to be carried out to meet the requirements of Title III,

(B) the portion of the requirements payment that will be used to carry out activities to meet such requirements, and

(C) the portion of the requirements payment that will be used to carry out other activities.

– HAVA §254(a)(6)

Status as of 2010: FULLY MET

HAVA funding was provided under Title I and Title II of the Act. Title I funds must be used for voting equipment, while Title II funds support all other needs. HAVA funds are "no-year" money, that is, federal funds that do not have to be expended in the year they are authorized. The original budget was designed to steward HAVA funds over many years to ensure that funding was reserved to continue to meet HAVA requirements after initial implementation.

The original budget anticipated federal payments of $21 million over three years to in 2005 – based on the authorization of funds. Actual federal appropriations and payments to Rhode Island to date total $17,673,533.

HAVA Fund Summary as of December 31, 2009

Total Title I Funds Received	$5,001,730.71
Total Title II Funds Received	$12,671,803.00
Total	**$17,673,533.71**
Interest earned on Title I Funds	**$140,275.09**
Interest earned on Title II Funds	**$484,994.82**
Total Interest Earned	**$625,269.91**
Total Title I Funds Disbursed	$5,142,005.80
Total Title II Funds Disbursed	$12,934,876.11
Total HAVA Funds Disbursed	**$18,076,881.91**
Balance – Title I Funds	-
Balance – Title II Funds	$221,921.71
Balance HAVA Funds	**$221,921.71**
5% Match of $12,671,803.00 (to be spent from State general revenues)	**$666,937.00-**

Fortunately, the State realized major savings (more than $9 million) with the decision not to convert its voting equipment to DRE voting machines.

On the other hand, the DOA decided that multi-year-payment obligations for the State's optical scan equipment and its service contract should be met with HAVA funding. That equipment was purchased in the 1990s, long before HAVA. DOA's decision obligated more than $5 million that the State Plan had envisioned using to fund additional improvements to our voting system.

Those factors, together with variances in other line items, resulted in total spending of $18,738,834 through 2009.

Summary of HAVA expenditures through Dec. 31, 2009

Category	Spent from Title I, Title II and Interest	Spent from 5% Match	Total by category
Central Voter Registration System	$7,081,597	$372,716	$7,454,313
Provisional Voting	$169,097	$8,900	$177,997
Accessible Voting Equipment	$8,568,455	$185,585	$8,754,040
Optical Scan Voting Equipment	$2,048,731	$92,158	$2,140,889
Election Official Training	$39,108	$13	$39,121
Poll Worker Recruitment & Training	$57,351	-	$57,531
Voter Registration	$0.00	$0.00	$0.00
Voter Education	$103,810	$2,445	$106,255
Complying with Requirements	$5,893	$26	$5,919
Preparation of State Plan	$2,840	$110	$2,950
TOTAL	**$18,076,882**	**$661,952**	**$18,738,834**

SECTION 7. MAINTENANCE OF EFFORT

How the State, in using the requirements payment, will maintain the expenditures of the State for activities funded by the payment at a level that is not less than the level of such expenditures maintained by the State for the fiscal year ending prior to November 2000. – HAVA §254(a)(7)

Status as of 2010: FULLY MET

The intent of HAVA funding is to pay for new or enhanced efforts, not to supplant State funding. Consistent with HAVA §254(a)(7), in using any requirements payment, Rhode Island must maintain expenditures of the State for activities funded by the payment at a level equal to or greater than the level of expenditures in State FY 2000 so long as the State has any HAVA funds in its account.

That amount totaled $421,742, which has been met in each year.

SECTION 8. HAVA PERFORMANCE GOALS AND MEASURES

How the State will adopt performance goals and measures that will be used by the State to determine its success and the success of units of local government in the State in carrying out the Plan, including timetables for meeting each of the elements of the Plan, descriptions of the criteria the State will use to measure performance and the process used to develop such criteria, and a description of which official is to be held responsible for ensuring that each performance goal is met.

Status as of 2010: FULLY MET

The original State Plan itself laid out clear, time-bound and measurable objectives for each element of HAVA and designated the state officials whose duties and responsibilities as outlined by Rhode Island statute corresponded to particular HAVA sections (see list below). This revision of the State Plan specifically details how and when each objective was met, thus satisfying the intent and requirement of HAVA Section 8.

This revised State Plan also makes clear that the State did all that it said it would do in 2003 to bring its law and regulations, equipment and electoral procedures into compliance with HAVA. The physical and administrative structures for fair, fully accessible elections over the next 20 years or more have been put in place.

Ultimately, the success of the State Plan will be judged by its ability to continue to improve voter participation and confidence in elections in Rhode Island.

The original State Plan anticipated developing a HAVA measurement system to assess both process and impact performance. Specifically,

- Did the State do what it said it would do within HAVA mandates and timetables (*process* measures)
- Did those activities make a difference in the conduct of and participation in elections in Rhode Island (*impact* measures)?

Reduced funding has been a factor in deferring development of a formal assessment system to answer the second question: the quality of the conduct of election or the level and nature of voter participation.

However, data from the Board of Elections show that the steps taken have had direct impact: New and updated voter registrations via the new DMV "motor-voter" electronic registration process have grown steadily. During the first year of implementation in 2004, 1,196 new voters were registered at DMV and 3,409 updated their registration information. In 2007, 20,532 new voters registered at DMV and 5,671 updated their voter records. In 2008 there were 21,000 new voter registrations and 8,226 registered voters updated their registration information. This continues to represent a significant expansion of the electorate itself as well

as an important new path by which voters themselves now help ensure the integrity and currency of our statewide voter registration records

Rhode Island continues to rely on provisional ballots to ensure that every properly eligible voter can exercise his right to vote, even when Election Day voter-record-errors or discrepancies exist. The Office of the Secretary of State has increased voter education and created a web-based Voter Information Center database so Rhode Islanders can confirm the status of their voter registration status and address discrepancies prior to the day of voting. Since that time, it is worthwhile to note that number of voters requiring a provisional ballot has decreased.

2004 General Election:	2,246
2006 General Election:	1,850
2006 Primary Election:	3,204
2008 Presidential Primary:	1,104
2008 Presidential Election	924

Each provisional ballot represents a voter who would have been turned away from the polls on Election Day under prior procedures.

Rhode Island's Presidential Preference Primary (PPP) in March 2008 attracted a record number of voters – 213,435, up more than 550% compared to the 2004 PPP and three times the number of voters who turned out in 2000 for the last competitive PPP. Thanks to HAVA, Rhode Island's election systems, voting equipment, polling places and public information were up to the challenge. The election took place without serious problems, delays or challenges at any polling place in the state.

Specific responsibilities for HAVA implementation:

Secretary of State

- Voting Systems, §301
- Voter Registration (CVRS), §303(a)
- Voter Education, §254(a)(3)
- Election official training, §254(a)(3)
- Budget and Fiscal Controls, §254(a)(3), §254(a)(6), §254(a)(7) and §254(a)(10)

Chair, Board of Elections

- Provisional Voting, §302 (a)
- Voting Information Requirements, §302(b)
- Voter Registration, §303(b)
- Poll worker training, §254(a)(3)
- Election official training, §254(a)(3), jointly with Secretary of State
- Administrative Complaint Procedures, §254(a)(9) and §402

SECTION 9. STATE-BASED ADMINISTRATIVE COMPLAINT PROCEDURE

A description of the uniform, nondiscriminatory State-based administrative complaint procedure in effect under Section 402.

Status as of 2010: FULLY MET

The Rhode Island General Laws empower the Board of Elections to *"make the rules, regulations, and directives that it deems necessary to carry out the objects and purposes of this title (Title 17 – Rhode Island Election Laws) not inconsistent with law… including the jurisdiction over all election matters on appeal from any local board and over any other matters pertinent and necessary to the proper supervision of election laws."*

In its 2003 session, the Rhode Island General Assembly adopted RIGL 17-7-5(15), which authorizes the Board of Elections to "establish and maintain an administrative complaint procedure in accordance with Section 402 of HAVA."

In Rhode Island, the Board of Elections hears complaints and conducts investigations on all election matters. After duly posting proposed regulations and holding public hearings, the Board of Elections adopted new regulations meeting the HAVA requirements on March 25, 2004. Those regulations were re-filed on January 3, 2007 and may be viewed online at: www.sos.ri.gov/rules.

SECTION 10. EFFECT OF TITLE I PAYMENTS

If the State received any payments under Title I, a description of how such payment will affect the activities proposed to be carried out under the Plan, including the amount of funds available for such activities.
– HAVA §254(a)(10)

Status as of 2010: FULLY MET

The 2003 *Rhode Island State Plan* for HAVA included details on the planned use of Title I funds, including amounts for each activity.

Rhode Island used its Title I payments to carry out the following activities:

- Complying with Centralized Voter Registration System requirements under Title III
- Improving the administration of elections
- Recruiting poll workers including high school and college students
- Educating voters concerning voting procedures, voting rights and voting technology
- Training election officials, poll workers and election volunteers
- Developing the State Plan for requirements payments to be submitted under Part 1 of Subtitle D of Title II
- Acquiring, improving and increasing the total number of voting systems
- Establishing toll-free telephone hotlines

SECTION 11. RHODE ISLAND'S HAVA STATE PLAN MANAGEMENT

How the State will conduct ongoing management of the Plan, except that the State may not make any material change in the administration of the plan unless the change –

> *(A) is developed and published in the Federal Register in accordance with section 255 in the same manner as the State plan;*
> *(B) is subject to public notice and comment in accordance with section 256 in the same manner as the State plan; and*
> *(C) takes effect only after the expiration of the 30-day period which begins on the date the change is published in the Federal Register in accordance with subparagraph (A). – HAVA §254 (a) (11)*

Status as of 2010: FULLY MET

The Secretary of State, as Rhode Island's designated "Chief State Election Official" (Chapter 29 & 30 of Rhode Island Public Law 2003) is responsible for coordination of the State's responsibilities under HAVA and for ongoing management of the State Plan.

Rhode Island was a national leader in developing fair, accurate and accessible elections prior to the passage of HAVA in 2002 and has leveraged HAVA assistance since 2002 to extend its leadership in this area. The Secretary of State considers the ongoing management of the State Plan as a continuation of Rhode Island's commitment to election reform. Each element has been managed to achieve compliance, maximize improvements to all aspects of the election process and ensure responsible stewardship of funding received through HAVA.

Of course, the Secretary of State does not act alone. The Board of Elections and the local boards of canvassers are critical partners in the implementation of HAVA, as they are in the conduct of all elections in Rhode Island. The Board of Elections and the local boards of canvassers are responsible for specific elements of the State Plan. Within the Office of the Secretary of State, the Elections Division is the administrative agency charged with the implementation and management of many aspects of HAVA.

The Secretary of State appointed a ten-member Voters First Advisory Commission in April 2007 to review and reform the state's election laws. The Commission was charged with initiating changes in law, regulation and rules which would make it easier for Rhode Islanders to vote and which would restore their confidence in the fairness of our electoral process. Those recommendations were before the Rhode Island General Assembly

The responsibility for fair, accurate and accessible elections and for increasing voter participation in our democracy is shared throughout Rhode Island. The legislature is a critical partner, ensuring that Rhode Island state law is consistent with all federal election mandates, including HAVA. In addition, all elected officials, civic and business leaders, community-based organizations, every citizens and educators share a commitment to improving voter

outreach and education in order to increase the participation of all segments of our community in the electoral process which is the bedrock of our democracy.

The Secretary of State has worked with the Federal Voting Assistance Program (FVAP) over the past several years. In doing so, many of the suggestions to assist UOCAVA voters have already been codified in Rhode Island law. Section 14 of this Plan details are our accomplishments to date and our plans for further compliance.

Once again, the State understands and agrees to comply with HAVA requirements related to the ongoing management of the State Plan. Specifically, the State agrees not to make any material change in the administration of the State Plan unless the change:

- Is developed and published in the Federal Register in accordance with HAVA §255 in the same manner as the State Plan
- Is subject to public notice and comment in accordance with HAVA §256 in the same manner as the State Plan
- Takes effect only after the expiration of the 30-day period that begins on the date the change is published in the Federal Register in accordance with subparagraph (A)

SECTION 12. CHANGES TO STATE PLAN FROM PREVIOUS FISCAL YEAR

In the case of a State with a State Plan in effect under this subtitle during the previous fiscal year, a description of how the plan reflects changes from the State Plan for the previous fiscal year and of how the State succeeded in carrying out the State Plan for such previous fiscal year. – HAVA 254 (a)(12)

This is Rhode Island's 2010 State Plan, addressing Fiscal Years 2011 and beyond. As the second update of the State Plan following seven years of implementation, every element of this Plan reflects the achievement of HAVA requirements and planned objectives in the 2003 plan. All of the HAVA requirements have been fully met and no further actions are planned under most of the sections of the Act. Funding permitting, future work through HAVA will address training, education and outreach to voters.

Additionally, this Plan addresses our achievements with respect to the MOVE Act requirements as listed in our narratives in Section 14.

Specifics on those achievements and future activities are given in the narrative under each Section above. A concise summary without narrative may also be found in Tables I, II and III in this report.

SECTION 13. STATE PLAN DEVELOPMENT AND COMMITTEE

A description of the committee which participated in the development of the State Plan in accordance with section 255 and the procedures followed by the committee under such Section 255 and Section 256 – HAVA §254 (a) (13)

13.1 PUBLIC ENGAGEMENT

The process for producing Rhode Island's original HAVA State Plan reflected a genuine, statewide commitment to improving elections, to public engagement and to open and ethical government. This State Plan reflects careful consideration of the ideas and concerns of hundreds of individuals and public officials from throughout Rhode Island.

The draft of the 2003 Rhode Island State Plan was created by the Secretary of State in partnership with a 75-member HAVA Rhode Island Advisory Committee. The committee included a wide representation of diverse stakeholders selected from all segments of the Rhode Island community, including elected officials, racial and ethnic communities, nonprofits and advocacy groups, students, business leaders, academics and labor unions.

Between March 10 and March 21, 2003, the subcommittees of the HAVA Rhode Island Advisory Committee met to discuss Rhode Island's current compliance with HAVA and identify key issues. They presented their preliminary reports for consideration and discussion at their March 24, 2003 meeting. These subcommittee reports were posted on the HAVA website of the Secretary of State. On May 19, 2003, a draft of the State Plan was presented to the full HAVA Advisory Committee for final review and comments and made available for public comment for 30 days. The final State Plan was released on August 13, 2003.

Rhode Island successfully implemented many HAVA requirements in time for the 2004 Presidential election as documented above. Comments and input based on practical experience in the 2004 and 2006 elections have been solicited from members of the public, poll workers and state and local election officials in creating this revised plan.

In 2007, Secretary of State Mollis appointed a ten-member Voters First Advisory Commission to review and reform the state's election laws. With testimony at five public hearings and deliberation at 11 workshop sessions, the Commissioners developed non-partisan White Papers on specific issues. Several recommended policies focused on the integrity of the process, including voting-booth privacy, restrictions on political canvassing at polling places and cleaning up voter rolls. Others promoted improving voter access through an early voting initiative, uniform statewide polling hours and expanded opportunities to register to vote.

13.2 VOTERS FIRST ADVISORY COMMISSION

In 2007 and 2008 ten members of the Voters First Advisory Commission worked closely with Secretary of State Mollis as Chief State Election Officer of Rhode Island in gathering the public's concerns and suggestions in improving the electoral process in Rhode Island. They have performed outstanding public service. The members are:

- Secretary of State Mollis, Chairman
- State Rep. Joe Almeida (D-Providence)
- State Rep. Jon D. Brien (D-Woonsocket)
- State Sen. June Gibbs (R- Little Compton, Middletown, Newport, Tiverton)
- Roger Harris, RI Disability Vote Project
- Robert Kando, executive director, state Board of Elections
- Ken McGill, registrar, Pawtucket Board of Canvassers
- State Sen. Juan Pichardo (D-Providence)
- Jan Ruggiero, director of Elections, Office of the Secretary of State
- Sue Stenhouse, deputy director, Governor's Office of Community Relations

13.3 HAVA RHODE ISLAND ADVISORY COMMITTEE

The HAVA Rhode Island Advisory Committee met in June and July 2010 to work with the Office of the Secretary of State in updating the current State Plan and adding all pertinent information with respect to the new section 14 of the Plan.

The members of the 2010 HAVA Rhode Island Advisory Committee are

Dennis L. Algiere, ***Senate Minority Leader***

Jane Anthony, ***Past Chairwoman, Rhode Island Commission on Women***

Bob Arruda, ***Past President, Operation Clean Government***

Scott Avedisian, ***Mayor, City of Warwick***

Catherine Avila, ***Director of Administration, Office of the Secretary of State***

Rick Battistoni, ***Professor of Political Science, Providence College***

Kate Bowden, ***Staff Attorney, Rhode Island Disability Law Center***

Robert T. Bray, ***Adjutant General***

Kerry Brusini, Director, ***North Providence Board of Canvassers***

Mario Bueno, Executive Director, Progreso Latino, Inc.

Rory Carmody, ***Director of Program Development, Cranston ARC***

Wayne Charness, ***Senior Vice President of Corporate Communications, Hasbro***

David N. Cicilline, ***Mayor, City of Providence***

Elaine Coderre, Speaker Pro Tempore

Kathleen Connell, *State Director, AARP- RI*

Bob Cooper, *Executive Secretary, Governor's Commission on Disabilities*

Robert Corrente, Chairman, Moderate Party

Michelle Cortes-Harkins, Interim Executive Director, Center for Hispanic Policy and Advocacy

Antonio Costa, *Portuguese-American Community Leader*

John Daluz, *Chairman, RI State Board of Elections*

Melba Depeña, *Past President, Rhode Island Latino Civic Fund*

Joanne DeVoe, President, League of Women Voters

Grace Farmer, *Financial Manager, HELP Coalition*

Dave Fleming, *President, Local 328, United Food & Commercial Workers*

Laurence K. Flynn, *Chairman, Providence Board of Canvassers*

Gordon D. Fox, *House Majority Leader*

Allan Fung, Mayor, City of Cranston

Richard Gaffney, *President, National Federation of the Blind of Rhode Island*

Mary Alyce Gasbarro, *League of Women Voters*

Brian Goldner, Chairman & Executive Officer, Hasbro

Elaina K. Goldstein, *Member, Republican State Central Committee*

Meghan Grady, President, Rhode Island Young Democrats

A. Vincent Igliozzi, *Providence Resident*

Stan Israel, *Vice President New England Health Care Employees Union, District 1199/SEIU*

Hannah Johnston, College Democrats

Robert Kando, *Executive Director, State Board of Elections*

Sara Koch, President, RI College Republicans

Dennis B. Langley, *Executive Director, Urban League of Rhode Island*

Peter Lee, *Executive Director, John Hope Settlement House*

Charlene Lima, *State Representative*

Ray Marcaccio, *Legal Counsel, Rhode Island State Board of Elections*

John Marion, Executive Director, Common Cause

Nicholas Mattiello, House Majority Leader

Donna McDonald, *Warwick Board of Canvassers*

Norrene D. McGeary, *East Greenwich Board of Canvassers*

Ken McGill, Registrar, *Pawtucket Board of Canvassers*

Kristen Meuse, *Past President, Rhode Island Young Democrats*

Maureen Moakley, *Professor of Political Science, University of Rhode Island*

Kate Monteiro, *Rhode Island Alliance for Lesbian & Gay Civil Rights*

Clifford R. Montiero, *President, NAACP - Providence Branch*

Domingo Morel, RI Latino Civic Fund

John Muggeridge, *General Manager and Vice President of Public Affairs, Fidelity Investments*

Ellen O'Hara, *Past President, Rhode Island Chapter of the National Association of Social Workers*

Rick O'Neill, *Canvassing Clerk, Newport Board of Canvassers*

Edwin Pacheco, Chairman, RI Democratic Committee

M. Teresa Paiva-Weed, President of the Senate

Thomas Palombo, *Assistant Attorney General*

Madeleine Pencak, *Registrar, Portsmouth Board of Canvassers*

Bob Rapoza, *Supervisor of Elections and Voter Registration Services, State Board of Elections*

Elizabeth H. Roberts, *Lieutenant Governor*

Rob Rock, *CIVICS Coordinator, Office of the Secretary of State*

Jan Ruggiero, *Director of Elections & Civics Division, Office of the Secretary of State*

Merrill Sherman, *President and Chief Executive Officer, Bank RI*

Eric Siegel, Co-Chair, Green Party of Rhode Island

Molly Soum, *President, The Cambodian Society*

Cathy Speer, *State Governing Board, Common Cause/Rhode Island*

June Spink, *Operation Clean Government*

Katrina A. Therien, *North Smithfield resident*

Matthew Thomas, *Chief Sachem, Narragansett Indian Tribe*

James Vincent, *Manager of Constituent Services, Rhode Island Housing*

Robert A. Walsh Jr., *Executive Director, National Education Association/Rhode Island*

SECTION 14. RHODE ISLAND COMPLIANCE WITH THE UNIFORMED AND OVERSEAS CITIZENS ABSENTEE VOTING ACT ("UOCAVA") AND THE MILITARY AND OVERSEAS VOTER EMPOWERMENT ACT ("MOVE ACT")

How Rhode Island will meet the requirements of the MOVE Act.

14.1. CLARIFICATION OF STATE RESPONSIBILITIES

MOVE Act §576
Deadline for compliance: November 2010 Election
Status as of April 30, 2010: FULLY MET

Requirement:

1. States may delegate the responsibilities under the Act to jurisdictions within the State.

Compliance:

1. In Rhode Island, the State is responsible for the administration of a single, uniform voter registration system for all voter registrations and mail ballot applications for all federal, state and local elections, including all UOCAVA voters. This centralized system provides for improved efficiency of the conduct of the electoral process. Thus, the state has delegated the responsibility to itself for the subject changes.

14.2. TRANSMITTING VOTER REGISTRATION APPLICATIONS AND ABSENTEE BALLOT APPLICATIONS

MOVE Act §577; UOCAVA §§102(a) and (f)
Deadline for compliance: November 2010 Election
Status as of April 30, 2010: FULLY MET

Requirements:

1. States must establish procedures that allow UOCAVA voters to request voter registration applications and absentee ballot applications by mail or electronically for general, special, primary, and runoff elections for Federal office. The procedures must include a means for the voter to designate how they want to receive the application – by mail or electronically.

2. The State must transmit the voter registration application or absentee ballot application based on the preference selected by the voter. If the voter does not indicate a preference, the application must be delivered in accordance with State law. In the absence of any relevant State law, the application must be delivered by mail.

3. To the extent practicable, the procedures must: (1) protect the security and integrity of the voter registration and absentee ballot application request process and (2) protect the privacy of the identity and personal data of the UOCAVA voter when the voter requests, and is sent a voter registration application or absentee ballot application.

Compliance:

1. Rhode Island General Laws, Title 17, Chapter 20 provides the authority for the transmission of voter registration applications and absentee ballot applications to all Rhode Island voters including all UOCAVA voters. It is important to note that UOCAVA voters are exempt from registration. [§ 17-20-4].[i]

2. Rhode Island accepts the mailing or faxing of an FPCA as a mail ballot application and is processed accordingly. The ballot is mailed and/or faxed to the voter based on the manner in which the FPCA was received. For applications that are faxed to RI, the ballot is mailed to the address and faxed to the number provided on the application. State mail ballot applications are also accepted by mail and/or fax for UOCAVA voters. [§17-20-6.1(e)][ii]

3. FPCA forms and mail ballot applications from UOCAVA voters are currently processed through our state central voter registration system (CVRS), which is HAVA compliant. Additionally UOCAVA voters use the fax transmission program sponsored by the FVAP for the transmittal of their ballot and related ballot materials. [§17-20-6.1(e)][iii]

14.3. DESIGNATING A MEANS OF ELECTRONIC COMMUNICATION

MOVE Act §577; UOCAVA §102(e)
Deadline for compliance: November 2010 Election
Status as of April 30, 2010: FULLY MET

Requirement:

1. Each State must designate at least one means of electronic communication for the following purposes: (1) for use by UOCAVA voters to request voter registration applications and absentee ballot applications; (2) for use by the States to send voter registration and absentee ballot applications to voters; and (3) for providing UOCAVA voters with election and voting information.

2. In addition to the means of electronic communication designated by the State, the State may provide a means of electronic communication for jurisdictions within the State to communicate with UOCAVA voters.

3. The State must include the designated means of electronic communication on all information and instructional materials that accompany balloting materials sent by the State to UOCAVA voters.

Compliance:

1. RI currently allows UOCAVA voters to send and receive mail ballot applications, mail ballots and all related materials through fax transmission. [§17-20-6.1(e)][iv]

2. Local boards of canvassers, in addition to the Office of the Secretary of State's Elections Division and the State Board of Elections, may also communicate through fax transmissions with UOCAVA voters.

3. State mail ballot applications and FPCA forms provide a space for applicant to indicate the fax number to which their materials should be sent. Rhode Island also provides this information to the Federal Voting Assistance Program (FVAP) for inclusion in their Voting Assistance Guide. [§17-20-13][v]

14.4. TRANSMITTING BLANK BALLOTS

MOVE Act §578; UOCAVA §102(f)
Deadline for compliance: November 2010 Election
Status as of April 30, 2010: FULLY MET

Requirements:

1. The States must develop procedures for transmitting blank ballots to UOCAVA voters by mail and electronically for general, special, primary, and runoff elections for Federal office.

2. The procedures must include a means for the voter to designate how they want to receive the blank ballot – by mail or electronically. The State must transmit the ballot based on the preference selected by the voter. If the voter does not indicate a preference, the ballot must be delivered in accordance with State law. In the absence of any relevant State law, the ballot must be delivered by mail.

3. To the extent practicable, the procedures must: (1) protect the security and integrity of absentee ballots and (2) protect the privacy of the identity and personal data of the UOCAVA voter throughout the transmission process.

Compliance:

1. Rhode Island currently has a procedure for transmittal of blank ballots to UOCAVA voters. We automatically send blank ballots to all UOCAVA voters, as our official ballots are not available 45 days before an election. [§17-20-10.2][vi]

2. If the applicant requested a faxed official ballot, we automatically fax and mail a blank ballot and then we fax and mail an official ballot when it becomes available. [§17-20-6.1(e)][vii]

3. Mail ballot requests from UOCAVA voters are currently processed through our state central voter registration system (CVRS), which is HAVA compliant for security and integrity. The State Board of Elections has promulgated rules and regulations for the receipt and counting of faxed voted ballots. [§17-20-6.1(e)][viii]

14.5. BALLOT TRACKING MECHANISM

MOVE Act §580; UOCAVA §102(b)
Deadline for compliance: November 2010 Election
Status as of April 30, 2010: FULLY MET

Requirement:

1. Each Chief State Election Official must work with local jurisdictions to develop a free access system that allows a UOCAVA voter to determine whether his/her absentee ballot was received by the election official.

Compliance:

1. In Rhode Island, the CVRS is a state-based "top-down" system and all voter registration and mail ballot data entered is stored real-time in the state CVRS database. The Office of the Secretary of State, local canvassing authorities and the State Board of Elections, as the case may be, enter information regarding the dates each step occurred in the delivery and receipt of each absentee ballot application and official ballot. This information is made available with a nightly update on the Secretary of State's website's Voter Information Center (VIC) application. VIC is easily accessible to any UOCAVA voter that has access to the Internet at www.sos.ri.gov/vic/.

14.6. ACCEPTING UOCAVA BALLOT MATERIALS

MOVE Act §581(a) and 582 UOCAVA §103
Deadline for compliance: (1) December 31, 2010
(2) November 2010 General Election
Status as of April 30, 2010: FULLY MET

Requirements:

1. Expands the use of the Federal Write-In Absentee Ballot (FWAB) to include all special, primary, and runoff elections for Federal office.

2. Prohibits States from refusing to accept and process an otherwise valid voter registration application, absentee ballot application, voted ballot, or FWAB from an overseas voter due to notarization requirements, paper type, weight and size, or envelope type, weight and size.

Compliance:

1. RI currently allows for the use of the FWAB for all UOCAVA voters to cast a ballot for each federal, state and local office for which he or she is entitled to vote in any general, primary or special election. [§17-20-6][ix]

2. UOCAVA voter materials are exempt from any notarization requirements under state law. State law does not contain any prohibition regarding paper type, weight and size or envelope type, weight and size with respect to a voter registration application, mail ballot application or voted ballot from a UOCAVA voter. [§§17-20-6.1(f) and (g)][x]

14.7. SINGLE APPLICATION FOR MULTIPLE ELECTIONS

MOVE Act §585 UOCAVA §104
Deadline for compliance: November 2010
Status as of April 30, 2010: IN PROGRESS

Requirement:

1. Removes the UOCAVA requirement that a single absentee ballot request serves as a request to receive absentee ballots through the subsequent two Federal election cycles.

Compliance:

1. Rhode Island law currently tracks the previous HAVA mandate that an FPCA application serves as a mail ballot request through two subsequent Federal election cycles. Rhode Island will be introducing legislation in the 2011 session to bring state law into conformance with UOCAVA §104 regarding single applications for multiple elections. [§17-20-6.1(c)][xi]

   Additionally, the state CVRS will be programmed to send UOCAVA voters a notice after the expiration of one calendar year, advising them that their FPCA card has expired.

Local canvassing authorities have also been trained to accept the most recent FPCA application as the current and active filing.

14.8. BALLOT TRANSMITTAL TIME

MOVE Act §579; UOCAVA §§102(a) and (g)
Deadline for compliance: November 2010 Election
Status as of April 30, 2010: IN PROGRESS

Requirements:

1. Absentee ballots must be sent at least 45 days before the election to any UOCAVA voter who has submitted a request by that date. If the request is received less than 45 days before the election, the ballot may be sent in accordance with State law and, if practicable, in an expedited manner.

2. A State may request a waiver from the 45-day transit time provision if the Chief State Election Official determines that the State cannot meet the requirements due to undue hardship. The undue hardship must be one of the following: (1) the date of the State primary; (2) a delay in generating ballots due to a legal contest; or (3) the State constitution prohibits the state from complying with the time frame requirements.

3. The waiver request must include: (1) a recognition that the purpose of the 45-day transit time is to allow UOCAVA voters enough time to vote in Federal elections; (2) an explanation of why the State cannot meet the requirement; (3) the number of days prior to Federal elections that the State requires absentee ballots be sent to UOCAVA voters; and (4) a comprehensive plan to ensure that overseas voters are able to receive and submit an absentee ballot in time for it to be counted. If the undue hardship is based on either the State primary date or the State constitution, the waiver request must be submitted no later than 90 days before the upcoming election. After consulting with the Attorney General, the Department of Defense must grant the waiver request if the comprehensive plan is deemed sufficient. The Department of Defense must approve or deny a waiver request based on the State primary date or State constitution no later than 65 days before the Election. If a State requests a waiver based on a delay in generating ballots due to a legal contest, the request must be submitted as soon as practicable. The Department of Defense must approve or deny the request no later than 5 days after the waiver request is received. If a waiver request is granted, it is valid only for the Election for which the request was submitted.

Compliance:

1. In Rhode Island, the date of the state primary prohibits us from having full official mail ballots available 45 days before an election. Ballots for federal office are generally

available and mailed by the 45th day before an election. This year our primary is September 14th. Primary results are certified to the Secretary of State on September 17th and the ballot preparation process begins forthwith. The 45th day before the election is Saturday, September 18th at which time ballots styles are still being generated, proofed, and sent to the printing company. The earliest full official ballots for some precincts are available is the 35th day before the election. All official mail ballots are usually available and in the mail and/or fax by the 30th day before the election, barring any court cases or unforeseen circumstances. [§§17-15-1 and 17-19-7][xii]

2. Rhode Island is currently in the process of requesting a waiver from the 45-day transit time in the event that unusual circumstances prevent us from having the federal ballot available by the 45-day deadline.

3. As part of the waiver we must provide a comprehensive plan to ensure that UOCAVA voters are able to receive and submit an absentee ballot in time for it to be counted. We are currently developing a plan whereby UOCAVA voters can download their ballot and related materials and mail or fax their voted ballot back to Rhode Island.

   Our plan is to modify our mail ballot module in our state central voter registration system (CVRS) to separate UOCAVA mail ballot applicants from regular mail ballot applicants to better assist UOCAVA voters in receiving their ballot as close to the 45-day deadline as possible.

   We will also modify our current VIC (Voter Information Center) on our website to better assist UOCAVA voters in (1) tracking the status of their mail ballot application and voted ballot, and (2) receiving their ballot as close to the 45-day deadline as possible.

   With respect to tracking ballot status, the Secretary of State's VIC allows every mail ballot applicant to follow the travel of their ballot, i.e. date their mail ballot application was received by local board; date local board certified application to SOS; date SOS mailed ballot; and date BOE received voted ballot. Accordingly, UOCAVA voters will be able to track the travel of their ballot.

   Through our VIC, we are planning to give UOCAVA voters the ability to print (1) the PDF version of their official ballot, (2) a document containing the language on their oath envelope and the return mailing address, and (3) any and all other pertinent voting instructions and cover sheets that will allow them to vote their ballot and either mail or fax it back to the State Board of Elections in accordance with RIGL 17-20-6.1

as close to the 45-day transit period as possible. While official printed ballots are not available until approximately 30-35 days before an election, the official PDF from which a ballot is printed is available anywhere from 40-42 days before an election. We will load these PDF files onto the voter record in VIC where they can download them

   Rhode Island has used official state blank ballots when the official ballot is not yet printed. UOCAVA voters requesting a ballot are sent a blank ballot by mail prior to the 45th day before an election; and when the official ballot becomes available they are also sent the official ballot by mail. UOCAVA voters requesting a ballot by fax are sent a blank ballot by mail and fax prior to the 45th day before an election; and when the official ballot becomes available they are also sent the official ballot by mail and fax. Additionally, UOCAVA voters are allowed by law to use the FWAB. [§17-20-6.1(e) and 17-20-6] [xiii]

4. Section 588 of the MOVE Act amends HAVA by authorizing the appropriation of "such sums as necessary" for FY2010 and beyond as requirements payments specifically for implementing the MOVE Act. Rhode Island plans on using these funds to update our central voter registration system (CVRS) to identify UOCAVA voters and their mail ballot requests and download this information into our Voter Information Center (VIC) as described in #3 above. Additionally, these funds will be used to update the programming of the VIC to identify the UOCAVA mail voters and provide the appropriate ballot and documents, again as described in #3 above.

14.9. RUNOFF ELECTION PLAN

MOVE Act §579(b); UOCAVA §102(a)
Deadline for compliance: November 2010 Election
Status as of April 30, 2010: NOT APPLICABLE

Requirement:

1. If a State holds a runoff election, it must have a written plan to make absentee ballots available to UOCAVA voters with sufficient time to vote.

Compliance:

1. Rhode Island does not conduct runoff elections.

14.10. REQUIREMENTS PAYMENTS

MOVE Act §588 UOCAVA §251
Deadline for compliance: (1) September 30, 2010
(2) May 1, 2010
Status as of April 30, 2010: IN PROGRESS

Requirements:

1. Amends the Help America Vote Act (HAVA) by authorizing the appropriation of "such sums as necessary" for FY 2010 and beyond as requirements payments to the States specifically for implementing the MOVE Act. Any funds appropriated under this provision may only be used to carry out the requirements of the MOVE Act. Nothing in the MOVE Act prohibits the States from using existing HAVA funds (or those authorized by a future appropriations bill) to implement the MOVE Act. If a State receives a FY 2010 requirements payment specifically authorized for implementation of the MOVE Act, it has until the last day of the 2011 fiscal year (September 30, 2012) to comply with the 5% match requirement.

2. States must amend their State plans to indicate how they will comply with the requirements of the MOVE Act.

Compliance:

1. Rhode Island intends to comply with the 5% match requirement by the September 30, 2012 deadline.

2. Rhode Island is currently in the process of amending our State Plan to show how we will comply or have complied with the MOVE Act requirements. We have filed the necessary paperwork requesting a waiver from May 1, 2010 deadline. The state plan will be filed with the EAC by September 1, 2010.

Section 14 Footnotes

[i] **§ 17-20-4 Exemption from registration.** – Any member of the armed forces or of the merchant marine of the United States in active service, any person absent from the state in the performance of "services intimately connected with military operations", as defined in § 17-20-3(d), and any person employed outside of the United States, as defined in § 17-20-3(c) who, except for registration, would be a qualified elector of this state, shall be exempt during the period of his or her service or employment and for two (2) years thereafter from the registration requirements of the Constitution of this state.

[ii] **§ 17-20-6.1 Alternative methods of voting by citizens covered by the Uniformed and Overseas Citizens Absentee Voting Act (UOCAVA) and other citizens residing outside the United States.** – (a) It is the intent and purpose that the provisions set forth in this section are designed to facilitate the federal mandate of the Uniformed and Overseas Citizens Absentee Voting Act (UOCAVA), 42 U.S.C. § 1973ff et seq.

(b) The Federal Post Card Application (FPCA) may be used as a request for an absentee ballot by:

(1) A member of the armed forces who is absent from the state by reason of being in active service;

(2) Any person absent from the state in performance of "services intimately connected with military operations" as defined in § 17-20-3(d);

(3) Any person who is employed outside of the United States as defined in § 17-20-3(c); and

(4) Any person who does not qualify under subparagraph (1), (2), or (3) above, but who is a citizen of the United States and absent from the state and residing outside the United States as described in chapter 21.1 of title 17.

(c) The single FPCA card shall permit the person to request an absentee ballot for each primary and election through the next two (2) regularly scheduled general elections for federal office in which the voter is eligible to vote.

(d) The FPCA card must be received by the local board of canvassers where the person last maintains his/her residence for voting purposes within the time frame for applying for absentee ballots as set forth in this title.

(e) If the FPCA, when used in accordance with this section, is sent by the voter through electronic transmission, it must be sent to the secretary of state and it must be received by the secretary of state by the deadline for applying for absentee ballots as set forth in this title. The secretary of state shall then forward the FPCA to the appropriate local authority who shall immediately certify and return the FPCA to the secretary of state with the notation that the corresponding ballots shall be sent by mail and electronic transmission. The secretary of state shall transmit ballots only to the facsimile number provided by the Federal Voter Assistance Program. The ballots sent by electronic transmission shall be returned to the state board by electronic transmission. These ballots will be counted at the state board in accordance with rules and regulations promulgated by the state board.

(f) The voter's signature on the FPCA does not need to be witnessed or notarized, when the FPCA is submitted as provided in this section.

(g) If a voter is casting a mail ballot received through the use of the FPCA card as provided in this section, the voter's signature does not need to be witnessed or notarized on the certifying envelope used for the return of the voted mail ballot.

[iii] See ii

[iv] See ii

[v] **§ 17-20-13 Form of application.** – The application to be subscribed by the voters before receiving a mail ballot shall, in addition to those directions that may be printed, stamped, or written on it by authority of the secretary of state, be in substantially the following form:

STATE OF RHODE ISLAND AND PROVIDENCE PLANTATIONS APPLICATION OF VOTER FOR BALLOT FOR ELECTION ON
(COMPLETE HIGHLIGHTED SECTIONS)
NOTE – THIS APPLICATION MUST BE RECEIVED BY THE BOARD OF CANVASSERS OF YOUR CITY OR TOWN NOT LATER THAN 4:00 P.M ON___
BOX A (PRINT OR TYPE)
NAME
VOTING ADDRESS
CITY/TOWN STATE RI ZIP CODE DATE OF BIRTH PHONE#
BOX B (PRINT OR TYPE)
NAME OF INSTITUTION (IF APPLICABLE)
ADDRESS
ADDRESS
CITY/TOWN STATE ZIP CODE
FACSIMILE NUMBER (if applicable)

[vi] **§ 17-20-10.2 Official state blank ballots.** – In the event the official ballot is not available for issuance and mailing forty-five (45) days before a general, primary, or special election, persons applying for a mail ballot under § 17-20-2(7) and persons applying for a mail ballot through the use of the Federal Post Card Application (FPCA) shall be issued an official state blank ballot forty-five (45) days before the election. Additionally, the voter shall be sent the official ballot immediately upon the ballots becoming available. The office of secretary of state shall be responsible for the arrangement, preparation, printing and distribution of the official state blank ballots. The secretary of state shall also be responsible for all accompanying candidate listings to the extent that information is available, instruction sheets, and envelopes.

[vii] See ii

[viii] See ii

[ix] **§ 17-20-6 Alternative methods of voting.** – Any qualified elector who is a member of the armed forces or of the merchant marine of the United States, or who is absent from the state in the performance of "services intimately connected with military operations" as defined in § 17-20-3(c), and any qualified elector of this state exempt from registration under § 17-20-4, shall have the right to vote at his or her option during the period of his or her service and for two (2) years thereafter by any one of the following methods:

(1) If the person is present within the state on the day of any election, that person shall have the right to vote in the manner prescribed in chapter 19 of this title, subject to any other provisions of this chapter.

(2) If the person is absent from the state on the day of any election, that person has the right to vote by absentee ballot in accordance with the provisions of this chapter, upon compliance with its provisions.

(3) The elector may cast an official federal absentee ballot federal write-in absentee ballot "FWAB" in accordance with the laws of the United States.

(ii) The elector may use the "FWAB" to cast a vote for each federal, state and local office for which he or she is entitled to vote in a general, primary or special election.

(4) The elector may also cast an official state blank ballot issued by the office of the secretary of state in accordance with this chapter.

[x] See ii

[xi] See ii

[xii] **§ 17-15-1 Date of primaries.** – A primary election for the nomination of candidates for each political party shall be held in each voting district in the manner provided in this chapter on the second Tuesday after the first Monday in September in each even numbered year.

§ 17-19-7 Local candidates and questions – Certification – Ballots. – The local board of each city or town shall certify to the secretary of state, not later than four o'clock (4:00) p.m. of the third (3rd) day following the last day for the holding of the primary held pursuant to the provisions of chapter 15 of this title, preceding any regular city or town election to be held on the Tuesday next after the first Monday in November in any year, or not later than twenty-nine (29) days before any regular city or town election held at any time other than on the Tuesday next after the first Monday in November in any year, or not later than twenty-nine (29) days before any special city or town election, the offices to be voted for at the election, the names of the candidates for each office and the party name under which the respective candidates were nominated, and any other information necessary to enable the secretary of state to prepare ballots uniform in size, type, color, and appearance with those prepared by the secretary for the state election, and in like manner the local board shall certify to the secretary of state, not later than four o'clock (4:00) p.m. on the ninetieth (90th) day preceding any regular city or town election to be held on the Tuesday next after the first Monday in November in any year, or not later than fifty (50) days before any regular city or town election held at any time other than on the Tuesday next after the first Monday in November in any year, or not later than fifty (50) days before any special city or town election, a copy of each question to be submitted to the electors of the city or town so that suitable ballots may be prepared and furnished for the election.

[xiii] See ii and ix

[FR Doc. 2010–31010 Filed 12–8–10; 8:45 am]

BILLING CODE 6820–KF–C

Reader Aids

Federal Register

Vol. 75, No. 236

Thursday, December 9, 2010

CUSTOMER SERVICE AND INFORMATION

Federal Register/Code of Federal Regulations	
General Information, indexes and other finding aids	**202–741–6000**
Laws	**741–6000**
Presidential Documents	
Executive orders and proclamations	**741–6000**
The United States Government Manual	**741–6000**
Other Services	
Electronic and on-line services (voice)	**741–6020**
Privacy Act Compilation	**741–6064**
Public Laws Update Service (numbers, dates, etc.)	**741–6043**
TTY for the deaf-and-hard-of-hearing	**741–6086**

ELECTRONIC RESEARCH

World Wide Web

Full text of the daily Federal Register, CFR and other publications is located at: **http://www.gpoaccess.gov/nara/index.html**

Federal Register information and research tools, including Public Inspection List, indexes, and links to GPO Access are located at: **http://www.archives.gov/federal__register**

E-mail

FEDREGTOC-L (Federal Register Table of Contents LISTSERV) is an open e-mail service that provides subscribers with a digital form of the Federal Register Table of Contents. The digital form of the Federal Register Table of Contents includes HTML and PDF links to the full text of each document.

To join or leave, go to **http://listserv.access.gpo.gov** and select *Online mailing list archives, FEDREGTOC-L, Join or leave the list (or change settings);* then follow the instructions.

PENS (Public Law Electronic Notification Service) is an e-mail service that notifies subscribers of recently enacted laws.

To subscribe, go to **http://listserv.gsa.gov/archives/publaws-l.html** and select *Join or leave the list (or change settings);* then follow the instructions.

FEDREGTOC-L and **PENS** are mailing lists only. We cannot respond to specific inquiries.

Reference questions. Send questions and comments about the Federal Register system to: **fedreg.info@nara.gov**

The Federal Register staff cannot interpret specific documents or regulations.

Reminders. Effective January 1, 2009, the Reminders, including Rules Going Into Effect and Comments Due Next Week, no longer appear in the Reader Aids section of the Federal Register. This information can be found online at **http://www.regulations.gov.**

CFR Checklist. Effective January 1, 2009, the CFR Checklist no longer appears in the Federal Register. This information can be found online at **http://bookstore.gpo.gov/.**

FEDERAL REGISTER PAGES AND DATE, DECEMBER

74605–75144 1
75145–75362 2
75363–75618 3
75619–75844 6
75845–76250 7
76251–76610 8
76611–76920 9

CFR PARTS AFFECTED DURING DECEMBER

At the end of each month, the Office of the Federal Register publishes separately a List of CFR Sections Affected (LSA), which lists parts and sections affected by documents published since the revision date of each title.

3 CFR

Proclamations:
8606 74605
8607 75613
8608 75615
8609 75617
8610 75845
8611 75847
8612 76251
8613 76611
8614 76613

Administrative Orders:
Presidential Determinations:
No. 2011-01 of October 6, 2010 75849
No. 2011-02 of October 8, 2010 75851
No. 2011-03 of October 15, 2010 75853
No. 2011-04 of October 25, 2010 75855
No. 2011-05 of November 19, 2010 75865

5 CFR

630 75363
890 76615
892 76615
1605 74607

7 CFR

6 76253
63 75867
802 76254

Proposed Rules:
319 75157

10 CFR

1010 75373

Proposed Rules:
430 75290
71 75641
73 75641

12 CFR

4 75574
21 75576
510 75583
563 75586
950 76617
980 76617
1264 76617
1266 76617
1269 76617
1272 76617
1807 75376

Proposed Rules:
701 75648
704 75648
741 75648

14 CFR

39 ..... 74608, 74610, 74616, 75868, 75870, 75872, 75878, 75882, 76624
97 ..... 76626, 76628
431 ..... 75619, 75621

Proposed Rules:
25 76647
39 ..... 74663, 74665, 74668, 74670, 75159, 75932, 75934, 76317
65 75649
71 ..... 76648, 76650, 76652

15 CFR

806 76630

Proposed Rules:
732 76653
738 76653
740 76653
743 76653
758 76653
774 ..... 76653, 76664
922 76319

16 CFR

322 75092
1102 76832

17 CFR

Proposed Rules:
23 ..... 75432, 76666
43 76140
45 76574
165 75728
190 ..... 75162, 75432
240 75208
242 75208
275 75650

18 CFR

Proposed Rules:
35 75336

20 CFR

404 76256
418 75884

21 CFR

520 76259
522 76260

Proposed Rules:
101 76526
1141 75936

24 CFR

5 76260
84 76260
85 76260
3500 74620

26 CFR

1 ..... 75896, 75897, 76262

31.....75896, 75897
40.....75897
301.....75896, 75897
602.....75896
Proposed Rules:
1.....75439, 76321
301.....75439

28 CFR

541.....76263

29 CFR

403.....74936, 75904
4044.....74622

30 CFR

250.....76632

31 CFR

103.....75593, 75607
594.....75904
595.....75904
597.....75904
Proposed Rules:
103.....76677

33 CFR

110.....76275
117.....76279, 76632
165.....75145, 76280
Proposed Rules:
117 .....76322, 76324, 76688
165.....76328

37 CFR

381.....74623
386.....75624

39 CFR

20.....75151
111.....76282
Proposed Rules:
3055.....75655

40 CFR

52 .....74624, 75625, 75628
72.....75060
78.....75060
80.....76790
98.....74774, 75060
131.....75762
180 .....74628, 74634, 75389, 76284
271.....76633
1500.....75628
1501.....75628
1502.....75628
1503.....75628
1504.....75628
1505.....75628
1506.....75628
1507.....75628
1508.....75628
Proposed Rules:
49.....76331
52 .....74673, 75656, 75658, 76332
58.....76336
85.....76337
86.....76337
63.....75937
168.....74673
271.....76691
600.....76337

42 CFR

424.....76293

44 CFR

Proposed Rules:
67 .....75941, 75945, 75949

45 CFR

158.....74864

46 CFR

Proposed Rules:
2.....74674

47 CFR

0.....75814
15.....75814
54.....75393
73.....76293, 76294

48 CFR

222.....76295
225.....76297
252.....76295, 76297
Proposed Rules:
201.....75444
215.....75550, 76692
234.....75550, 76692
242.....75550, 76692
244.....75550, 76692
245 .....75444, 75550, 76692
252 .....75444, 75550, 76692

49 CFR

225.....75911
572.....76636
Proposed Rules:
Ch. 2 76345
209.....75448
213.....75448
214.....75448
215.....75448
217.....75448
218.....75448
219.....75448
220.....75448
221.....75448
222.....75448
223.....75448
224.....75448
225.....75448
227.....75448
228.....75448
229.....75448
230.....75448
231.....75448
232.....75448
233.....75448
234.....75448
235.....75448
236.....75448
238.....75448
239.....75448
240.....75448
241.....75448
501.....76692
509.....76692
510.....76692
511.....76692
512.....76692
520.....76692
523.....76692
525.....76692
526.....76692
531.....76337
533.....76337
571.....76186, 76692
585.....76186

50 CFR

17.....75913, 76086
21.....75153
300.....74640
622.....74648, 74650Q, 74656, 76300, 76874, 76890
635.....75416, 76302
648.....74661, 76315
660.....75417
660.....75638, 75639
Proposed Rules:
648.....76351
660.....75449
679.....76352, 76372

LIST OF PUBLIC LAWS

This is a continuing list of public bills from the current session of Congress which have become Federal laws. It may be used in conjunction with ''P L U S'' (Public Laws Update Service) on 202–741–6043. This list is also available online at *http://www.archives.gov/federal-register/laws.html*.

The text of laws is not published in the **Federal Register** but may be ordered in ''slip law'' (individual pamphlet) form from the Superintendent of Documents, U.S. Government Printing Office, Washington, DC 20402 (phone, 202–512–1808). The text will also be made available on the Internet from GPO Access at *http://www.gpoaccess.gov/plaws/index.html*. Some laws may not yet be available.

H.J. Res. 101/P.L. 111–290
Making further continuing appropriations for fiscal year 2011, and for other purposes. (Dec. 4, 2010; 124 Stat. 3063)
Last List December 3, 2010

Public Laws Electronic Notification Service (PENS)

PENS is a free electronic mail notification service of newly enacted public laws. To subscribe, go to *http://listserv.gsa.gov/archives/publaws-l.html*

Note: This service is strictly for E-mail notification of new laws. The text of laws is not available through this service. **PENS** cannot respond to specific inquiries sent to this address.