Issued in Renton, Washington, on February 22, 2011.

Kalene C. Yanamura,

Acting Manager, Transport Airplane Directorate, Aircraft Certification Service.

[FR Doc. 2011–5161 Filed 3–7–11; 8:45 am]

BILLING CODE 4910–13–P

DEPARTMENT OF TRANSPORTATION

Federal Aviation Administration

14 CFR Part 39

[Docket No. FAA–2007–28661; Directorate Identifier 2007–NM–013–AD]

RIN 2120–AA64

Airworthiness Directives; The Boeing Company Model 737–600, –700, –700C, –800, and –900 Series Airplanes

AGENCY: Federal Aviation Administration (FAA), DOT.

ACTION: Supplemental notice of proposed rulemaking (NPRM); reopening of comment period.

SUMMARY: We are revising an earlier proposed airworthiness directive (AD) for the products listed above. That NPRM proposed to require installation of an automatic shutoff system for the center tank fuel boost pumps, installation of a placard in the airplane flight deck if necessary, and concurrent modification of the P5–2 fuel control module assembly. That NPRM also proposed to require revisions to the Limitations and Normal Procedures sections of the airplane flight manual to advise the flightcrew of certain operating restrictions for airplanes equipped with an automated center tank fuel pump shutoff control. Additionally, that NPRM proposed to require a revision to the Airworthiness Limitations (AWL) section of the Instructions for Continued Airworthiness (ICA) to incorporate AWL No. 28–AWL–19 and No. 28–AWL–23. That NPRM further proposed to require installation of a secondary control relay for the electrical control circuit of each of the two center tank fuel boost pumps. That NPRM was prompted by fuel system reviews conducted by the manufacturer. This action revises that NPRM by adding airplanes, adding additional operational testing of the automatic shutoff system for certain airplanes, removing the requirement for incorporating AWL No. 28–AWL–19 into the AWL section of the ICA, and adding an option of installation and maintenance of universal fault interrupters using a certain supplemental type certificate. We are proposing this supplemental NPRM to prevent center tank fuel pump operation with continuous low pressure, which could lead to friction sparks or overheating in the fuel pump inlet that could create a potential ignition source inside the center fuel tank. These conditions, in combination with flammable fuel vapors, could result in a center fuel tank explosion and consequent loss of the airplane. Since these actions impose an additional burden over those proposed in the NPRM, we are reopening the comment period to allow the public the chance to comment on these proposed changes.

DATES: We must receive comments on this supplemental NPRM by April 4, 2011.

ADDRESSES: You may send comments by any of the following methods:

- *Federal eRulemaking Portal:* Go to *http://www.regulations.gov.* Follow the instructions for submitting comments.
- *Fax:* 202–493–2251.
- *Mail:* U.S. Department of Transportation, Docket Operations, M–30, West Building Ground Floor, Room W12–140, 1200 New Jersey Avenue, SE., Washington, DC 20590.
- *Hand Delivery:* U.S. Department of Transportation, Docket Operations, M–30, West Building Ground Floor, Room W12–140, 1200 New Jersey Avenue, SE., Washington, DC 20590, between 9 a.m. and 5 p.m., Monday through Friday, except Federal holidays.

For service information identified in this AD, contact Boeing Commercial Airplanes, Attention: Data & Services Management, P.O. Box 3707, MC 2H–65, Seattle, Washington 98124–2207; telephone 206–544–5000, extension 1; fax 206–766–5680; e-mail *me.boecom@boeing.com;* Internet *https://www.myboeingfleet.com.* You may review copies of the referenced service information at the FAA, Transport Airplane Directorate, 1601 Lind Avenue, SW., Renton, Washington. For information on the availability of this material at the FAA, call 425–227–1221.

Examining the AD Docket

You may examine the AD docket on the Internet at *http://www.regulations.gov;* or in person at the Docket Management Facility between 9 a.m. and 5 p.m., Monday through Friday, except Federal holidays. The AD docket contains this proposed AD, the regulatory evaluation, any comments received, and other information. The street address for the Docket Office (phone: 800–647–5527) is in the **ADDRESSES** section. Comments will be available in the AD docket shortly after receipt.

FOR FURTHER INFORMATION CONTACT: Tak Kobayashi, Aerospace Engineer, Propulsion Branch, ANM–140S, FAA, Seattle Aircraft Certification Office, 1601 Lind Avenue, SW., Renton, Washington 98057–3356; *phone:* (425) 917–6499; *fax:* (425) 917–6590; *e-mail: Takahisa.Kobayashi@faa.gov.*

SUPPLEMENTARY INFORMATION:

Comments Invited

We invite you to send any written relevant data, views, or arguments about this proposed AD. Send your comments to an address listed under the **ADDRESSES** section. Include "Docket No. FAA–2007–28661; Directorate Identifier 2007–NM–013–AD;" at the beginning of your comments. We specifically invite comments on the overall regulatory, economic, environmental, and energy aspects of this proposed AD. We will consider all comments received by the closing date and may amend this proposed AD because of those comments.

We will post all comments we receive, without change, to *http://www.regulations.gov,* including any personal information you provide. We will also post a report summarizing each substantive verbal contact we receive about this proposed AD.

Discussion

We issued an NPRM to amend 14 CFR part 39 to include an airworthiness directive (AD) that would apply to certain Model 737–600, –700, –700C, –800, and –900 series airplanes. That NPRM published in the **Federal Register** on July 10, 2007 (72 FR 37479). That NPRM proposed to require installation of an automatic shutoff system for the center tank fuel boost pumps, installation of a placard in the airplane flight deck if necessary, and concurrent modification of the P5–2 fuel control module assembly. That NPRM proposed to require revisions to the Limitations and Normal Procedures sections of the airplane flight manual to advise the flightcrew of certain operating restrictions for airplanes equipped with an automated center tank fuel pump shutoff control. Additionally, that NPRM proposed to require a revision to the Airworthiness Limitations (AWL) section of the Instructions for Continued Airworthiness (ICA) to incorporate AWL No. 28–AWL–19 and No. 28–AWL–23. That NPRM also proposed to require installation of a secondary control relay for the electrical control circuit of each of the two center tank fuel boost pumps.

Actions Since Previous NPRM Was Issued

Since we issued the previous NPRM, we received a report of failure of the left-hand fuel pump of the center wing tank (CWT) to shut off after being selected "OFF" by the flightcrew during flight on a Model 737–700 airplane. Subsequent to that report, the failure was found on two additional airplanes. Information indicated that the autoshutoff system appeared to function normally; however, when the flightcrew manually turned off the CWT pump switches, that action turned off the right-hand pump, but re-energized the left-hand pump due to incorrect wiring. The low-pressure lights turned off, incorrectly indicating to the flightcrew that power to both pumps had been removed. The failure condition results in continual running of the left-hand fuel pump without indication to the flightcrew, which could lead to localized overheating of parts inside the fuel pump, and which could produce an ignition source inside the fuel tank.

Investigation revealed that incorrect wiring could occur on airplanes on which an autoshutoff system was installed in accordance with Boeing Alert Service Bulletin 737–28A1206, dated January 11, 2006; or Revision 1, dated January 30, 2008. Functional tests conducted in accordance with Boeing Alert Service Bulletin 737–28A1206, dated January 11, 2006; or Revision 1, dated January 30, 2008; alone are not adequate to detect the incorrect wiring condition.

As a result, on November 18, 2008, we issued emergency AD 2008–24–51, 39–15781, for Model 737–600, –700, –700C, –800, and –900 series airplanes to prevent extended dry-running of the fuel pump. (That AD published in the **Federal Register** on February 24, 2009 (74 FR 8155)). That AD requires accomplishing a wiring test of the autoshutoff system to verify continuity and a visual verification that the wiring is correctly installed; doing corrective actions, if necessary; and doing a functional test of the autoshutoff system, and applicable maintenance actions.

The preamble to AD 2008–24–51 explains that we consider the requirements of that AD "interim action." We did not require the corrective actions provided in AD 2008–24–51 to be accomplished on airplanes for which the power-failed "ON" (*i.e.,* uncommanded pump "ON") protection system was installed in accordance with Boeing Alert Service Bulletin 737–28A1248, dated December 21, 2006, or Revision 1, dated January 9, 2008; however, we were considering further rulemaking that might require additional testing for those airplanes. We now have determined that additional testing, which has been incorporated into Boeing Alert Service Bulletin 737–28–1206, Revision 2, dated May 21, 2009 (described in the Relevant Service Information section of this supplemental NPRM), must be accomplished. This supplemental NPRM follows from that determination.

In addition, AD 2008–24–51 provides an optional installation of the power failed 'ON' protection system for the center tank fuel boost pump in accordance with Boeing Alert Service Bulletin 737–28A1248, dated December 21, 2006; or Revision 1, dated January 9, 2008. That AD states that the optional installation terminates the automatic shutoff system wiring test required by paragraphs (f) and (g) of AD 2008–24–51.

Since we issued that AD, we have determined that installation of that protection system does not correct potential incorrect wiring that could exist on airplanes on which an autoshutoff system was installed in accordance with Boeing Alert Service Bulletin 737–28A1206, dated January 11, 2006; or Revision 1, dated January 30, 2008. Therefore, we have revised the proposed actions specified in this supplemental NPRM to require accomplishment of Boeing Alert Service Bulletin 737–28A1206, Revision 2, dated May 21, 2009.

However, we have also added new paragraph (r) to this supplemental NPRM to allow accomplishment of Boeing Alert Service Bulletin 737–28A1206, dated January 11, 2006; or Revision 1, dated January 30, 2008; as acceptable for compliance with the corresponding actions specified in paragraph (g) of this supplemental NPRM, provided one of the following actions has been accomplished: (1) The procedures specified in paragraph (f) of AD 2008–24–51, or (2) the actions specified in Part 3 of the Accomplishment Instructions of Boeing Alert Service Bulletin 737–28A1206, Revision 2, dated May 21, 2009.

Relevant Service Information

Since we issued the original NPRM, Boeing has issued Alert Service Bulletin 737–28A1206, Revision 2, dated May 21, 2009; and Alert Service Bulletin 737–28A1248, Revision 2, dated August 28, 2009. In the original NPRM, we referred to Boeing Alert Service Bulletin 737–28A1206, dated January 11, 2006, as the appropriate source of service information for installing the automatic shutoff system, and to Boeing Alert Service Bulletin 737–28A1248, dated December 21, 2006, as the appropriate source of service information for installing the secondary pump control relays.

Boeing Alert Service Bulletin 737–28A1206, Revision 2, among other changes, introduces new operational tests in Part 3 of the Work Instructions for airplanes that have incorporated Boeing Alert Service Bulletin 737–28A1206, dated January 11, 2006; or Revision 1, dated January 30, 2008; but have not accomplished paragraph (f) of AD 2008–24–51. Boeing Alert Service Bulletin 737–28A1206, Revision 2, also clarifies instructions and incorporates additional operational tests to ensure the system is installed properly for new installations.

The actions specified in Boeing Alert Service Bulletin 737–28A1248, Revision 2, are essentially the same as the actions specified in Boeing Alert Service Bulletin 737–28A1248, dated December 21, 2006 (referred to in the original NPRM), although certain illustrations showing the location of certain connectors have been corrected.

We have revised this supplemental NPRM to refer to Boeing Alert Service Bulletin 737–28A1206, Revision 2; and Boeing Alert Service Bulletin 737–28A1248, Revision 2.

We have also added a new paragraph (q) to this supplemental NPRM specifying that accomplishing the actions in accordance with Boeing Alert Service Bulletin 737–28A1248, dated December 21, 2006; or Boeing Alert Service Bulletin 737–28A1248, Revision 1, dated January 9, 2008; before the effective date of the AD is acceptable for compliance with the proposed requirements of paragraph (j) (specified as paragraph (l) of the original NPRM) of this supplemental NPRM.

Boeing Alert Service Bulletin 737–28A1206, Revision 2, dated May 21, 2009, refers to Boeing Component Service Bulletin 233A3202–28–03, dated January 12, 2006, as an additional source of guidance for replacing the left and right center boost pump switches, and changing the wiring, of the P5–2 fuel control module assembly.

Boeing has issued Service Bulletin Information Notice 737–28A1206 IN 05, dated October 7, 2010, to inform operators of the following items:

- Sheet 2 of 4 of Figure 11 of Boeing Alert Service Bulletin 737–28A1206, Revision 2, dated May 21, 2009, was inadvertently replaced with Sheet 2 of 4 of Figure 11 from Boeing Alert Service Bulletin 737–28A1206, dated January 11, 2006. That figure was corrected in Boeing Alert Service Bulletin 737–28A1206, Revision 1, dated January 30,

2008, and did not need to be changed in Boeing Alert Service Bulletin 737–28A1206, Revision 2, dated May 21, 2009. We have added Figure 1 in this supplemental NPRM to provide the correct Sheet 2 of 4 of Figure 11.

- A typographical error appears in the name of the part in the first row of the "Parts Modified and Reidentified" table in paragraph 2.C.3. of Boeing Alert Service Bulletin 737–28A1206, Revision 2, dated May 21, 2009.

Boeing intends to correct these errors in the next revision of Boeing Alert Service Bulletin 737–28A1206.

Other Relevant Rulemaking

On April 29, 2008, we issued AD 2008–10–10, Amendment 39–15516 (73 FR 25986, May 8, 2008), applicable to certain Model 737–600, –700, –700C, –800, and –900 series airplanes. On December 23, 2009, that AD was revised and reissued as AD 2008–10–10 R1, Amendment 39–16164 (75 FR 1529, January 12, 2010). AD 2008–10–10 R1 requires revising the maintenance program by incorporating new limitations for fuel tank systems to satisfy Special Federal Aviation Regulation (SFAR) No. 88 requirements. That AD also requires an initial inspection to phase in certain repetitive AWL inspections, and repair if necessary. That AD resulted from a design review of the fuel tank systems. We issued that AD to prevent the potential for ignition sources inside fuel tanks caused by latent failures, alterations, repairs, or maintenance actions, which, in combination with flammable fuel vapors, could result in a fuel tank explosion and consequent loss of the airplane.

We have added a new paragraph (o) to this supplemental NPRM specifying that incorporating AWL No. 28–AWL–23 into the maintenance program in accordance with paragraph (g)(3) of AD 2008–10–10 R1 terminates the corresponding action specified in paragraph (k) (specified as paragraph (m) of the original NPRM) of this supplemental NPRM.

Comments

We gave the public the opportunity to comment on the previous NPRM. The following presents the comments received on the NPRM and the FAA's response to each comment.

Support for the NPRM

AirTran Airways supported the NPRM.

Request To Clarify the Scope of the Original NPRM

Boeing requested that we add a statement to the Summary section of the original NPRM specifying that the original NPRM will not be extended to the main wing tanks, as discussed in meetings between Boeing and the Seattle Aircraft Certification Office (ACO), FAA. Boeing stated that the original emergency AD was based on discrepancies in the manufacturing process, and that the original emergency AD was later expanded because inspection of in-service units showed that the units could possibly overheat in service or during manufacture. Boeing further stated that there is no service history of incidents or accidents for the main wing tanks on Model 737–600, –700, –700C, –800, and –900 series airplanes to support the proposed AD action for main tanks as well as center tanks.

We infer that Boeing is referring to certain fuel pump operating restrictions mandated by AD 2002–19–52, Amendment 39–12900 (67 FR 61253, September 30, 2002), that were later mandated by AD 2002–24–51, Amendment 39–12992 (68 FR 10, January 2, 2003), to address an unsafe condition pertaining to fuel pump overheating. (AD 2002–19–52 provided optional terminating action, which, if accomplished, removed certain operating restrictions; AD 2002–24–51 reinstated those operating restrictions because the terminating action provided in AD 2002–19–52 was not effective in eliminating the unsafe condition addressed in AD 2002–24–51—overheating of parts in the priming and vapor section of the fuel pump.) We agree that the requirements of this supplemental NPRM will not be expanded to address the main wing tanks because the fuel pumps for those tanks should never run dry. Since the Summary section of this supplemental NPRM discusses only the center fuel tanks, it is not necessary to revise it. Therefore, we have not changed the supplemental NPRM in this regard.

Request To Issue Separate ADs

KLM Royal Dutch Airlines (KLM) requested that we issue separate ADs for installation of the automatic shutoff system for the center tank fuel boost pumps in accordance with Boeing Alert Service Bulletin 737–28A1206, and installation of the secondary pump control relays in accordance with Boeing Alert Service Bulletin 737–28A1248. KLM stated that combining these modifications makes compliance with the original NPRM very complex for industry.

We disagree with issuing separate ADs. Boeing Alert Service Bulletin 737–28A1206 and Boeing Alert Service Bulletin 737–28A1248 address separate parts of the same unsafe condition (the extended dry running of the pumps) on the same airplanes. We have not changed the supplemental NPRM in this regard.

Request To Clarify Unsafe Condition

Goodrich Corporation (Goodrich) requested that we provide a clear definition of the proposed requirements of the original NPRM regarding the pump/airplane operating limitations. Goodrich pointed out that the stated purpose of the original NPRM is to "prevent" fuel pump operation with "continuous" low pressure, and that the word "prevent" implies that the fuel pumps should never be operated with the inlets uncovered (low pressure). Goodrich stated that it is also unclear as to what "continuous low pressures" means, and that the terms "prevent" and "continuous" seem to conflict. Goodrich also stated that the intent of AD 2002–19–52 and AD 2002–24–51 is to require a predetermined fuel mass in the center tank to ensure that the pumps will never run dry during operation of an airplane, and that the unsafe condition described in the original NPRM seems to conflict with the unsafe condition identified in these ADs. Goodrich asked if the pumps can run dry for 15 seconds, or if they must be shut off as soon as the pump inlets are no longer covered. Goodrich also asked if a momentary uncovering of the inlets is acceptable, due to sudden maneuvers or fuel slosh.

We agree to provide clarification. This supplemental NPRM is intended to prevent the fuel pumps from continuing to run after the tank is empty. The possible ignition source is not dry running by itself, but overheating or sparking that could occur when the pump components are no longer bathed in fuel. Boeing and Hydro-Aire conducted testing that showed the pumps can run at a low pressure condition for significantly longer than 15 continuous seconds without leading to overheating or sparking. Momentary uncovering of the pumps for less than 15 continuous seconds is safe and allowing 15 seconds of continuous pump low-pressure conditions prevents pumps from automatically shutting off during maneuvering or sloshing, which would create unnecessary pilot workload. No change to the supplemental NPRM is necessary in this regard.

Request To Revise the Unsafe Condition

Boeing requested that we clarify the unsafe condition specified in the Summary section and in paragraph (d) of the original NPRM (specified as paragraph (e) of this supplemental NPRM). Boeing stated that the unsafe condition is indicated continuous low pressure when the pump is operated with no fuel available to its inlet, not pump operation with the inlet covered with fuel. Boeing suggested using the following statement:

> We are proposing this AD to prevent center tank fuel pump operation with continuous low pressure (with no fuel passing through the pump), which could lead to friction sparks or overheating in the fuel pump inlet that could create a potential ignition source inside the center fuel tank. These conditions, in combination with flammable fuel vapors, could result in a center fuel tank explosion and consequent loss of the airplane.

We agree that the unsafe condition is present only when there is no fuel available to cover the pump inlet. However, the continuous low pressure condition indicates that the fuel pump inlet may be uncovered, which could result in extended dry running of the fuel pump and possible overheating or sparking. The automatic shutoff system is designed to prevent fuel pump operation with continuous low pressure, and it is not dependent on whether fuel is still passing through the pump. Therefore, we have not added the phrase "with no fuel passing through the pump" to this supplemental NPRM. We have, however, reworded the summary section and paragraph (e) of this supplemental NPRM slightly to specify "* * * overheating in the fuel pump inlet that could create a potential ignition source. * * *"

Request to Revise Estimated Costs

The Air Transport Association (ATA), on behalf of its member Delta Air Lines (DAL), stated that it disagrees with the cost estimates proposed in the original NPRM because the costs do not include the time required to accomplish the initial and repetitive AWL inspections.

We infer that the commenters request we revise the Estimated Costs table in this supplemental NPRM to reflect the cost of accomplishing the initial and repetitive AWL inspections. We disagree, since the initial and repetitive AWL inspections are not directly required by this supplemental NPRM. The cost information provided in this supplemental NPRM describes only the direct costs of the specific actions proposed by this supplemental NPRM. This supplemental NPRM requires only revising the maintenance program to incorporate the AWL inspections, and provides a compliance time to phase in the initial actions. Section 91.403(c) of the Federal Aviation Regulations (14 CFR 91.403(c)) requires the inspections once the maintenance program is changed. Therefore, we have not changed this supplemental NPRM in this regard.

Request To Add Terminating Action

TDG Aerospace, Inc. (TDG) stated that it is currently certifying its universal fault interrupter (UFI) technology for use on Model 737–600, –700, –700C, –800, and –900 series airplanes. TDG, therefore, requested that we revise the original NPRM to allow the installation of its UFI as a means of compliance with the proposed requirements of the original NPRM, if the UFI is approved prior to issuance of the final rule. TDG also stated that the same UFI hardware has already been approved under Supplemental Type Certificate (STC) ST01950LA for Model 757–200 and –300 series airplanes. TDG noted that AD 2008–11–07, Amendment 39–15529 (73 FR 30755, May 29, 2008), presently incorporates TDG's UFI under STC ST01950LA as an approved alternative method of compliance with certain requirements of that AD.

We agree. Since the issuance of the original NPRM, we have evaluated STC ST02076LA and have determined that installing and maintaining TDG Aerospace UFIs in accordance with that STC would also address the unsafe condition addressed in this supplemental NPRM for Model 737–600, –700, –700C, –800, and –900 series airplanes. Therefore, we have added paragraph (s) to this supplemental NPRM to allow installation of STC ST02076LA as a terminating action for paragraphs (g) through (k) of this supplemental NPRM.

Request To Clarify the Applicability of the Original NPRM

Boeing requested that we clarify that the original NPRM would not apply to Model 737–100, –200, –200C, –300, –400, and –500 series airplanes (Model 737 classics). Boeing stated that the "FAA's Determination and Requirements of the Proposed AD" section of the original NPRM discusses the installation of a placard for mixed fleet operations. (In the original NPRM, we stated that placards are necessary only for "mixed fleet operation," which means that some airplanes in an operator's fleet are equipped with automatic shutoff systems while other airplanes are not.) Boeing pointed out that, for many operators, this includes operation of 737 Classic models that are not affected by this supplemental NPRM. Boeing stated that we need to clarify that the placard would be required only on Model 737–600, –700, –700C, –800, and –900 series airplanes (Model 737 Next Generation airplanes).

We agree that placard installation is required only for mixed fleet operation of Model 737 Next Generation airplanes. Paragraph (c) of this supplemental NPRM clearly states that this supplemental NPRM applies to Model 737–600, –700, –700C, –800, and –900 series airplanes. Therefore, we have not changed the supplemental NPRM in this regard.

Request To Incorporate Latest Service Information

Boeing requested that we revise paragraphs (f)(1) and (f)(3) of the original NPRM to account for the information notices against the service bulletins referred to in the original NPRM. Boeing, AirTran Airways, and the ATA, on behalf of its member DAL, noted that both Boeing Alert Service Bulletin 737–28A1206, dated January 11, 2006; and Boeing Alert Service Bulletin 737–28A1248, dated December 21, 2006; have had information notices issued against them since the original NPRM was issued. DAL notes that the information notices specify that they are not FAA-approved and are not intended to be used as the basis for deviation from the approved service bulletins. However, in the absence of revisions to the service bulletins, DAL believed that the AD should include the information in these information notices.

We do not agree to include information notices in this supplemental NPRM. As DAL notes, information notices are not FAA-approved. Therefore, it is inappropriate to refer to an information notice in an AD action. However, we removed the "Service Information References" paragraph from this supplemental NPRM. That paragraph was identified as paragraph (f) in the original NPRM. Instead, we have provided the full service document citations throughout this supplemental NPRM. We have reidentified subsequent paragraphs accordingly.

Request To Extend Compliance Time

KLM and the ATA, on behalf of its member American Airlines, requested that we extend the compliance time specified in paragraph (g) of the original NPRM from 36 months to 72 months to align with their heavy maintenance programs. KLM estimated that the proposed modification will take between 250 and 300 work hours. The commenters stated that the modification will also require extensive "power off

A/C time," and that the only scheduled maintenance that can accommodate this modification is a heavy maintenance check (4C-check), which is scheduled every 72 months by most operators. KLM stated that the proposed 36-month compliance time will force operators to accomplish the modification in an extended light C-check, adding 2–3 days of ground time. The commenters also stated that the proposed compliance time will have a substantial impact on operators, requiring special scheduling and out-of-service time. KLM is convinced that the compliance time can be extended safely, while operating under the condition of AD 2002–24–51 (*i.e.,* maintaining the wet shutoff of the fuel pumps).

We disagree with extending the compliance time proposed in the original NPRM. In developing an appropriate compliance time for this action, we considered the urgency associated with the subject unsafe condition and the practical aspect of accomplishing the required modification within a period of time that corresponds to the normal scheduled maintenance for most affected operators. In consideration of these items, in addition to the unsafe condition being suspected as the cause of fuel tank explosions in 1991 and 2001, we have determined that a 36-month compliance time is necessary to ensure an acceptable level of safety. However, according to the provisions of paragraph (t) of this supplemental NPRM, we may approve requests to adjust the compliance time if the requests include data substantiating that the new compliance time would provide an acceptable level of safety. We have not changed the supplemental NPRM in this regard.

Request To Allow Use of Existing Alternative Methods of Compliance (AMOC)

Boeing requested that we revise the original NPRM to specify that operators may continue using the procedures specified in AD 2002–19–52 and AD 2002–24–51, or the procedures approved as an AMOC for paragraph (b) of AD 2002–24–51 by FAA Approval Letter 140S–03–189, dated June 30, 2003, until an operator has inspected all center tank fuel pumps and modified all airplanes in its fleet. As justification, Boeing stated that the AMOC has already been accepted as a valid means of fulfilling the intent of the original NPRM pending hardware installation.

We agree that the procedures specified in AD 2002–24–51, or the procedures approved by FAA Approval Letter 140S–03–189 as an AMOC to AD 2002–24–51, continue to be acceptable until all airplanes in an operator's fleet are in compliance with all the proposed requirements of this supplemental NPRM.

It should be noted that, although AD 2002–24–51 and AD 2002–19–52 require identical airplane flight manual (AFM) procedures, the unsafe conditions addressed by those ADs are not the same. This supplemental NPRM does not address the unsafe condition addressed by AD 2002–19–52; therefore, it is inappropriate to include alternative procedures for that AD in this supplemental NPRM. We have made no change to the supplemental NPRM in this regard.

Request To Revise the AFM Instructions

Boeing requested that we revise the original NPRM as follows, in order to match the current AFM instructions: (1) Add the title "Center Tank Fuel Pumps" to the limitation in paragraph (j)(1) of the original NPRM (specified as paragraph (i)(3) of this supplemental NPRM), and (2) change "900 kilograms" to "907 kilograms" in the fifth paragraph under the heading "*Defueling and Fuel Transfer*" in paragraph (j)(2) of the original NPRM (specified as paragraph (i)(4) of this supplemental NPRM). Boeing also requested that we replace the words "main tanks" with "center tank" in the third paragraph under the heading "*Defueling and Fuel Transfer*" in paragraph (j)(2) of the original NPRM, in order to correct a typographical error.

For accuracy, we agree with the wording changes provided by Boeing. We have revised paragraphs (i)(3) and (i)(4) of this supplemental NPRM accordingly.

Request To Clarify Requirement for Installing Secondary Control Relays

Boeing requested that we revise the original NPRM to clarify that only one additional secondary control relay must be added to each center tank boost pump control system. Boeing stated that the wording in Boeing Alert Service Bulletin 737–28A1248, dated December 21, 2006, which we referred to in the original NPRM, is incorrect. Boeing also stated that the word "override" should not be used—in order to maintain consistency with Boeing Alert Service Bulletin 737–28A1206 and the nomenclature on the cockpit P5–2 fuel control panel. Boeing also stated that the clarification will be included when Boeing Alert Service Bulletin 737–28A1248 is revised. Boeing requested that the clarification be included in the "Summary," "Relevant Service Information," and "FAA's Determination and Requirements of the Proposed AD," sections and paragraphs (l) and (m) of the original NPRM (paragraphs (j) and (k) of this supplemental NPRM).

We agree to revise the Summary section and paragraphs (j) and (k) of this supplemental NPRM (paragraphs (l) and (m) of the original NPRM) accordingly, for the stated reasons. We have not revised certain other sections of the original NPRM that Boeing referred to because, although those sections do appear in this supplemental NPRM, the text of those sections has been revised to reflect information new or specific to the supplemental NPRM, and no longer contains the text referred to by Boeing.

Request To Delete AWL Revision Requirements From the Original NPRM

KLM and the ATA, on behalf of its member DAL, requested that we remove the proposed requirements from the original NPRM to incorporate AWL No. 28–AWL–19 and No. 28–AWL–23 into the AWL of the ICA. The commenters noted that we issued an NPRM (Docket No. FAA–2007–28384, Directorate Identifier 2006–NM–165–AD) that proposed to require revising the AWL section of the ICA to incorporate the AWL in Subsection F of the Boeing 737–600/700/700C/700IGW/800/900 Maintenance Planning Data (MPD) Document, D626A001–CMR, Revision March 2006. (As explained previously, on April 29, 2008, we issued AD 2008–10–10 mandating that NPRM.) The commenters stated that the original NPRM appears to duplicate the requirements to incorporate AWLs No. 28–AWL–19 and No. 28–AWL–23 into the AWL of the ICA provided in AD 2008–10–10 R1, and that it is more appropriate to require those AWLs in AD 2008–10–10 R1 rather than the newly proposed action.

From the commenters' request and statements, we infer that the commenters requested we delete paragraphs (k) and (m) of the original NPRM (paragraph (k) of this supplemental NPRM). We partially agree.

We agree to delete paragraph (k) of the original NPRM from this supplemental NPRM because the incorporation of AWL No. 28–AWL–19 is currently required by AD 2008–10–10 R1, as pointed out by the commenters. We do not agree to remove paragraph (m) of the original NPRM (paragraph (k) of this supplemental NPRM), because the incorporation of AWL No. 28–AWL–23 is optional in AD 2008–10–10 R1, and therefore that AWL may not have been incorporated into operators' maintenance programs.

We also have added a new paragraph (o) to this supplemental NPRM specifying that incorporating AWL No. 28–AWL–23 into the maintenance program in accordance with paragraph (g)(3) of AD 2008–10–10 R1 terminates the corresponding actions required by paragraph (k) of this supplemental NPRM. No further change to the supplemental NPRM is necessary in this regard.

Explanation of Additional Changes Made to This Supplemental NPRM

We have revised this supplemental NPRM in the following ways:

- We have revised this supplemental NPRM to identify the legal name of the manufacturer as published in the most recent type certificate data sheet for the affected airplane models.
- We revised Note 1 of this supplemental NPRM to clarify that requests for approval of an AMOC with the proposed requirements of this supplemental NPRM should include a description of changes to the required inspections that will ensure the continued operational safety of the airplane.
- We added a new paragraph (d) to this supplemental NPRM to provide the Air Transport Association (ATA) of America subject code 28, Fuel. This code is added to make this supplemental NPRM parallel with other new AD actions. We have reidentified subsequent paragraphs accordingly.
- We added a new Note 2 in this supplemental NPRM to explain that Boeing Alert Service Bulletin 747–28A1206, Revision 2, dated May 21, 2009, refers to Boeing Component Service Bulletin 233A3202–28–03, dated January 12, 2006, as an additional source of guidance for replacing the left and right center boost pump switches with new switches and changing the wiring of the P5–2 fuel control module assembly.
- We revised paragraph (h) in this supplemental NPRM to remove the statement indicating that installing a placard in accordance with paragraph (c) of AD 2002–19–52 is acceptable for the compliance with the requirements of paragraph (h) of this supplemental NPRM. This change was made to eliminate confusion between the requirements of this supplemental NPRM and AD 2002–19–52.
- We added a new Note 3 in this supplemental NPRM to clarify that the AFM limitations required by AD 2002–19–52 continue to be required until the optional terminating actions specified in paragraph (g) of that AD are accomplished.
- We removed paragraph (i) of the original NPRM from this supplemental NPRM. That paragraph would have required operators to modify the P5–2 fuel control module assembly in accordance with Boeing Component Service Bulletin 233A3202–28–03, dated January 12, 2006. However, operators have the option to obtain modified P5–2 assemblies from the supplier, instead of making modifications by themselves. The action we intend to require is the replacement of the P5–2 fuel control module assembly having certain part numbers with the modified P5–2 assembly having new part numbers. Because that action is already provided in the Accomplishment Instructions of Boeing Alert Service Bulletin 737–28A1206, Revision 2, dated May 21, 2009, we have determined that paragraph (i) of the original NPRM is not necessary. We have also removed the corresponding cost for the concurrent requirement proposed in paragraph (i) of the original NPRM from the Costs of Compliance section of this supplemental NPRM.
- We removed all references to the use of "later revisions" of the applicable service information from this AD to be consistent with FAA and Office of the Federal Register policies. We may consider approving the use of later revisions of the service information as an AMOC with this AD, as provided by paragraph (t) of this AD.
- We removed Note 3 of the original NPRM from this supplemental NPRM; that note was redundant to Note 2 of the original NPRM. Instead, Note 4 of this supplemental NPRM addresses all AFM revisions required by this supplemental NPRM.
- We have revised paragraph (k) in this supplemental NPRM (paragraph (m) of the original NPRM) to require revising the maintenance program to include AWL No. 28–AWL–23, instead of revising the Airworthiness Limitations section of the Instructions for Continued Airworthiness. We have also included an initial compliance time of 1 year for doing the actions specified in AWL No. 28–AWL–23.
- We added a new paragraph (l) in this supplemental NPRM to specify that no alternative inspections or inspection intervals may be used unless they are approved as an AMOC. Inclusion of this paragraph in the supplemental NPRM is intended to ensure that the AD-mandated airworthiness limitations changes are treated the same as the airworthiness limitations issued with the original type certificate.
- We added a new paragraph (p) in this supplemental NPRM to specify that accomplishing the actions required by paragraph (g) of this supplemental NPRM terminates the requirements of paragraph (f) of AD 2008–24–51.

FAA's Determination

We are proposing this supplemental NPRM because we evaluated all the relevant information and determined the unsafe condition described previously is likely to exist or develop in other products of these same type designs. Certain changes described above expand the scope of the original NPRM. As a result, we have determined that it is necessary to reopen the comment period to provide additional opportunity for the public to comment on this supplemental NPRM.

Proposed Requirements of the Supplemental NPRM

This supplemental NPRM would require accomplishing the actions specified in the service information described previously.

Explanation of Change to Costs of Compliance

Since issuance of the original NPRM, we have increased the labor rate used in the Costs of Compliance from $80 per work-hour to $85 per work-hour. The Costs of Compliance information, below, reflects this increase in the specified hourly labor rate.

Costs of Compliance

We estimate that this proposed AD affects 685 airplanes of U.S. registry.

We estimate the following costs to comply with this proposed AD:

ESTIMATED COSTS

Action	Labor cost	Parts cost	Cost per product	Number of U.S.-registered airplanes	Cost on U.S. operators
Installation of the automatic shut-off system (Boeing Alert Service Bulletin 737–28A1206).	Between 94 and 117 (depending on airplane configuration) work-hours × $85 per hour = Between $7,990 and $9,945.	Between $22,994 and $30,197 (depending on airplane configuration).	Between $30,984 and $40,142.	538	Between $16,669,392 and $21,596,396.
Placard installation, if necessary	1 work-hour × $85 per hour = $85.	$10	$95	685	$65,075.
AFM revision	1 work-hour × $85 per hour = $85.	None	$85	538	$45,730.
Installation of secondary pump control relays (Boeing Alert Service Bulletin 737–28A1248).	68 work-hours × $85 per hour = $5,780.	$3,274	$9,054	685	$6,201,990.
AWL revision to add 28–AWL–23	1 work-hour × $85 per hour = $85.	None	$85	685	$58,225.

Authority for This Rulemaking

Title 49 of the United States Code specifies the FAA's authority to issue rules on aviation safety. Subtitle I, section 106, describes the authority of the FAA Administrator. "Subtitle VII: Aviation Programs" describes in more detail the scope of the Agency's authority.

We are issuing this rulemaking under the authority described in Subtitle VII, Part A, Subpart III, Section 44701: "General requirements." Under that section, Congress charges the FAA with promoting safe flight of civil aircraft in air commerce by prescribing regulations for practices, methods, and procedures the Administrator finds necessary for safety in air commerce. This regulation is within the scope of that authority because it addresses an unsafe condition that is likely to exist or develop on products identified in this rulemaking action.

Regulatory Findings

We determined that this proposed AD would not have federalism implications under Executive Order 13132. This proposed AD would not have a substantial direct effect on the States, on the relationship between the national Government and the States, or on the distribution of power and responsibilities among the various levels of government.

For the reasons discussed above, I certify this proposed regulation:

(1) Is not a "significant regulatory action" under Executive Order 12866,

(2) Is not a "significant rule" under the DOT Regulatory Policies and Procedures (44 FR 11034, February 26, 1979),

(3) Will not affect intrastate aviation in Alaska, and

(4) Will not have a significant economic impact, positive or negative, on a substantial number of small entities under the criteria of the Regulatory Flexibility Act.

List of Subjects in 14 CFR Part 39

Air transportation, Aircraft, Aviation safety, Incorporation by reference, Safety.

The Proposed Amendment

Accordingly, under the authority delegated to me by the Administrator, the FAA proposes to amend 14 CFR part 39 as follows:

PART 39—AIRWORTHINESS DIRECTIVES

1. The authority citation for part 39 continues to read as follows:

Authority: 49 U.S.C. 106(g), 40113, 44701.

§ 39.13 [Amended]

2. The FAA amends § 39.13 by adding the following new airworthiness directive (AD):

The Boeing Company: Docket No. FAA–2007–28661; Directorate Identifier 2007–NM–013–AD.

Comments Due Date

(a) We must receive comments by April 4, 2011.

Affected ADs

(b) Accomplishing certain requirements of this AD terminates certain requirements of 2001–08–24, Amendment 39–12201; AD 2002–24–51, Amendment 39–12992; and AD 2008–24–51, Amendment 39–15781. AD 2002–19–52, Amendment 39–12900, is affected by this AD.

Applicability

(c) This AD applies to the airplanes identified in paragraphs (c)(1) and (c)(2) of this AD, certificated in any category.

(1) The Boeing Company Model 737–600, –700, –700C, –800, and –900 series airplanes identified in Boeing Alert Service Bulletin 737–28A1206, Revision 2, dated May 21, 2009.

(2) The Boeing Company Model 737–600, –700, –700C, –800, and –900 series airplanes identified in Boeing Alert Service Bulletin 737–28A1248, Revision 2, dated August 28, 2009.

Note 1: This AD requires revisions to certain operator maintenance documents to include new inspections. Compliance with these inspections is required by 14 CFR 91.403(c). For airplanes that have been previously modified, altered, or repaired in the areas addressed by these inspections, the operator may not be able to accomplish the inspections described in the revisions. In this situation, to comply with 14 CFR 91.403(c), the operator must request approval for an alternative method of compliance (AMOC) according to paragraph (t) of this AD. The request should include a description of changes to the required inspections that will ensure the continued operational safety of the airplane.

Subject

(d) Joint Aircraft System Component (JASC)/Air Transport Association (ATA) of America Code 28, Fuel.

Unsafe Condition

(e) This AD was prompted by fuel system reviews conducted by the manufacturer. We are issuing this AD to prevent center tank fuel pump operation with continuous low pressure, which could lead to friction sparks or overheating in the fuel pump inlet that could create a potential ignition source inside the center fuel tank. These conditions, in combination with flammable fuel vapors, could result in a center fuel tank explosion and consequent loss of the airplane.

Compliance

(f) Comply with this AD within the compliance times specified, unless already done.

Installation of Automatic Shutoff System for the Center Tank Fuel Boost Pumps

(g) For airplanes identified in paragraph 1.A.1. of Boeing Alert Service Bulletin 737–28A1206, Revision 2, dated May 21, 2009:

Within 36 months after the effective date of this AD, install an automatic shutoff system for the center tank fuel boost pumps, by accomplishing all of the actions specified in Part 1 and Part 2 of the Accomplishment Instructions of Boeing Alert Service Bulletin 737–28A1206, Revision 2, dated May 21, 2009, except that Figure 1 of this AD must be used in lieu of Sheet 2 of Figure 11 of Boeing Alert Service Bulletin 737–28A1206, Revision 2, dated May 21, 2009. If a placard has been previously installed on the airplane in accordance with paragraph (h) of this AD, the placard may be removed from the flight deck of only that airplane after the automatic shutoff system has been installed. Installing automatic shutoff systems on all airplanes in an operator's fleet, in accordance with this paragraph, terminates the placard installation required by paragraph (h) of this AD for all airplanes in an operator's fleet.

Note 2: Boeing Alert Service Bulletin 737–28A1206, Revision 2, dated May 21, 2009, refers to Boeing Component Service Bulletin 233A3202–28–03, dated January 12, 2006, as an additional source of guidance for replacing the left and right center boost pump switches of the P5–2 fuel control module assembly with new switches and changing the wiring of the P5–2 fuel control module assembly.

BILLING CODE 4910–13–P

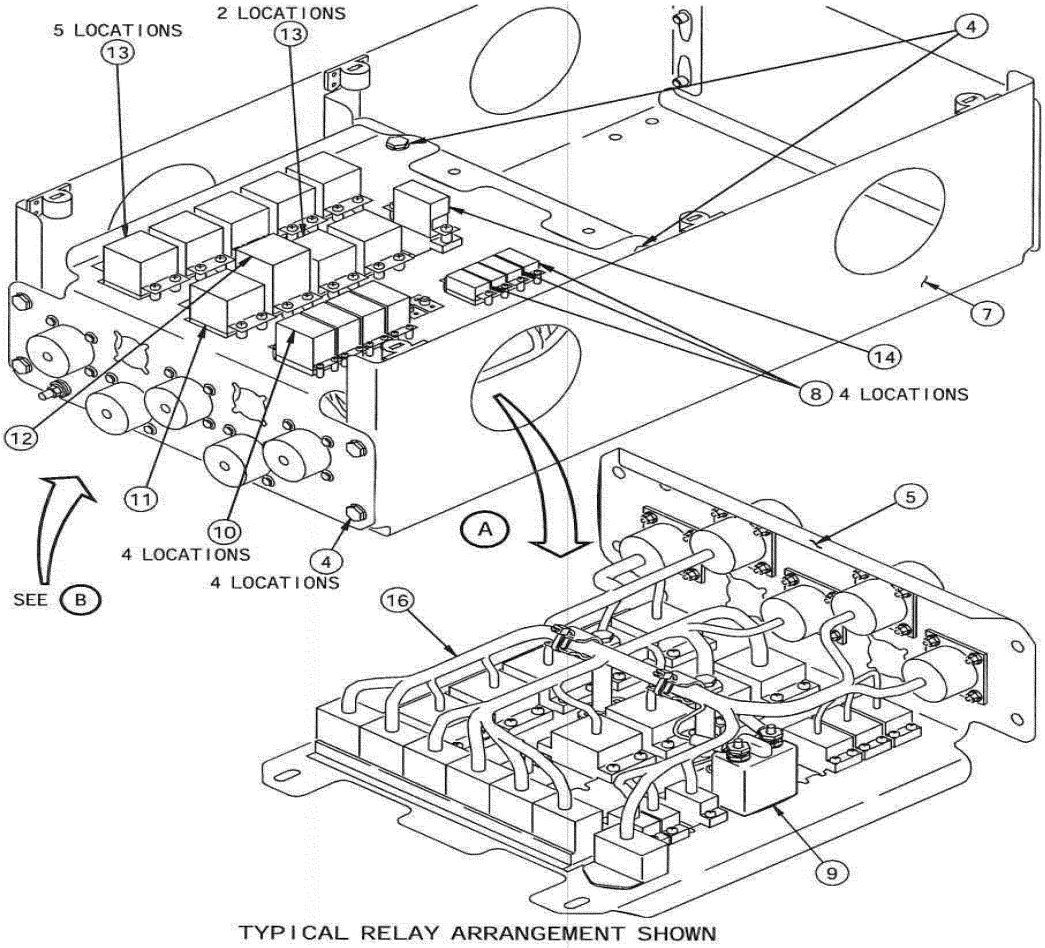

Figure 1

BILLING CODE 4910–13–C

Placard Installation for Mixed Fleet Operation

(h) Prior to or concurrently with installing an automatic shutoff system on any airplane in an operator's fleet, as required by paragraph (g) of this AD, install a placard adjacent to the pilot's primary flight display on all airplanes in the operator's fleet that are not equipped with an automatic shutoff system for the center tank fuel boost pumps. The placard must read as follows (unless alternative placard wording is approved by an appropriate FAA Principal Operations Inspector):

"AD 2002–24–51 fuel usage restrictions required."

Installing an automatic shutoff system, in accordance with paragraph (g) of this AD, terminates the placard installation required by this paragraph for only that airplane. Installing automatic shutoff systems on all airplanes in an operator's fleet, in accordance with paragraph (g) of this AD, terminates the placard installation required by this paragraph for all airplanes in an operator's fleet. If automatic shutoff systems are installed concurrently on all airplanes in an operator's fleet in accordance with paragraph (g) of this AD, or if operation according to the fuel usage restrictions of AD 2002–24–51 is maintained until automatic shutoff systems are installed on all airplanes in an operator's fleet, the placard installation specified in this paragraph is not required.

Airplane Flight Manual (AFM) Revision

(i) For airplanes on which Boeing Alert Service Bulletin 737–28A1206, Revision 2, dated May 21, 2009, has been accomplished: At the applicable time specified in paragraph (i)(1) or (i)(2) of this AD, do the actions specified in paragraphs (i)(3) and (i)(4) of this AD.

(1) For airplanes on which the terminating action specified in paragraph (g) of AD 2002–19–52 has been done: Concurrently with accomplishing the actions required by paragraph (g) of this AD.

(2) For airplanes on which the terminating action specified in paragraph (g) of AD 2002–19–52 has not been done: Concurrently with accomplishing the terminating action specified in paragraph (g) of AD 2002–19–52.

(3) Revise Section 1 of the Limitations section of the Boeing 737–600/–700/–700C/–800/–900 AFM to include the following statement. This may be done by inserting a copy of this AD into the AFM.

"Center Tank Fuel Pumps

Intentional dry running of a center tank fuel pump (low pressure light illuminated) is prohibited."

Note 3: For clarification purposes, the AFM limitations required by AD 2002–19–52 continue to be required until the optional terminating actions specified in paragraph (g) of AD 2002–19–52 have been done.

(4) Revise Section 3 of the Normal Procedures section of the Boeing 737–600/-700/-700C/-800/-900 AFM to include the following statements. This may be done by inserting a copy of this AD into the AFM. Alternative statements that meet the intent of the following requirements may be used if approved by an appropriate FAA Principal Operations Inspector.

"CENTER TANK FUEL PUMPS

Alternative Method of Compliance (AMOC) to AD 2001–08–24 and AD 2002–24–51 for Aircraft with the Automated Center Tank Fuel Pump Shutoff

Center tank fuel pumps must not be "ON" unless personnel are available in the flight deck to monitor low pressure lights.

For ground operation, center tank fuel pump switches must not be positioned "ON" unless the center tank fuel quantity exceeds 1000 pounds (453 kilograms), except when defueling or transferring fuel. Upon positioning the center tank fuel pump switches "ON" verify momentary illumination of each center tank fuel pump low pressure light.

For ground and flight operations, the corresponding center tank fuel pump switch must be positioned "OFF" when a center tank fuel pump low pressure light illuminates [1]. Both center tank fuel pump switches must be positioned "OFF" when the first center tank fuel pump low pressure light illuminates if the center tank is empty.

[1] When established in a level flight attitude, both center tank pump switches should be positioned "ON" again if the center tank contains usable fuel.

Defueling and Fuel Transfer

When transferring fuel or defueling center or main tanks, the fuel pump low pressure lights must be monitored and the fuel pumps positioned to "OFF" at the first indication of the fuel pump low pressure [1].

Defueling the main tanks with passengers on board is prohibited if the main tank fuel pumps are powered [2].

Defueling the center tank with passengers on board is prohibited if the center tank fuel pumps are powered and the auto-shutoff system is inhibited [2].

[1] Prior to transferring fuel or defueling, conduct a lamp test of the respective fuel pump low pressure lights.

[2] Fuel may be transferred from tank to tank or the aircraft may be defueled with passengers on board, provided fuel quantity in the tank from which fuel is being taken is maintained at or above 2000 pounds (907 kilograms)."

Note 4: When statements identical to those in paragraphs (i)(3) and (i)(4) of this AD have been included in the general revisions of the AFM, the general revisions may be inserted into the AFM, and the copy of this AD may be removed from the AFM.

Installation of Secondary Pump Control Relays

(j) For airplanes identified in paragraph 1.A.1. of Boeing Alert Service Bulletin 737–28A1248, Revision 2, dated August 28, 2009: Within 60 months after the effective date of this AD, install one secondary control relay for the electrical control circuit of each of the two center tank fuel boost pumps, in accordance with the Accomplishment Instructions of Boeing Alert Service Bulletin 737–28A1248, Revision 2, dated August 28, 2009.

Airworthiness Limitations (AWL) Revision for AWL No. 28–AWL–23

(k) For airplanes identified in paragraph 1.A.1. of Boeing Alert Service Bulletin 737–28A1248, Revision 2, dated August 28, 2009: Concurrently with accomplishing the actions required by paragraph (j) of this AD, or within 30 days after the effective date of this AD, whichever occurs later, revise the maintenance program by incorporating AWL No. 28–AWL–23 of Subsection G of Section 9 of the Boeing 737–600/700/800/900 MPD Document, D626A001–CMR, Revision July 2010. The initial compliance time for the actions specified in AWL No. 28–AWL–23 is within 1 year after accomplishing the installation required by paragraph (j) of this AD, or within 1 year after the effective date of this AD, whichever occurs later.

No Alternative Inspections or Inspection Intervals

(l) After accomplishing the applicable actions specified in paragraph (k) of this AD, no alternative inspections or inspection intervals may be used unless the inspections or inspection intervals are approved as an AMOC in accordance with the procedures specified in paragraph (t) of this AD.

Terminating Action for AD 2001–08–24, Amendment 39–12201

(m) Accomplishing the actions required by paragraphs (g), (h), and (i) of this AD terminates the requirements of paragraph (a) of AD 2001–08–24, for Model 737–600, –700, –700C, –800, and –900 series airplanes that have the automatic shutoff system installed. After accomplishing the actions required by paragraphs (g), (h), and (i) of this AD, the AFM limitation required by paragraph (a) of AD 2001–08–24 may be removed from the AFM for those airplanes.

Terminating Action for AD 2002–24–51, Amendment 39–12992

(n) Accomplishing the actions required by paragraphs (g), (h), and (i) of this AD terminates the requirements of paragraph (b) of AD 2002–24–51 for Model 737–600, –700, –700C, –800, and –900 series airplanes that have the automatic shutoff system installed. After accomplishing the actions required by paragraphs (g), (h), and (i) of this AD, the AFM limitations required by paragraph (b) of AD 2002–24–51 may be removed from the AFM for those airplanes.

Terminating Action for AWL Revision

(o) Incorporating AWL No. 28–AWL–23 into the maintenance program in accordance with paragraph (g)(3) of AD 2008–10–10 R1, Amendment 39–16164, terminates the corresponding action required by paragraph (k) of this AD.

Terminating Action for AD 2008–24–51

(p) Accomplishing the actions required by paragraph (g) of this AD terminates the requirements of paragraph (f) of AD 2008–24–51.

Credit for Actions Accomplished in Accordance With Previous Service Information

(q) Actions accomplished before the effective date of this AD in accordance with

Boeing Alert Service Bulletin 737–28A1248, dated December 21, 2006; or Boeing Alert Service Bulletin 737–28A1248, Revision 1, dated January 9, 2008; are considered acceptable for compliance with the corresponding actions specified in paragraph (j) of this AD.

(r) Actions accomplished before the effective date of this AD in accordance with Boeing Alert Service Bulletin 737–28A1206, dated January 11, 2006; or Revision 1, dated January 30, 2008; are considered acceptable for compliance with the corresponding actions specified in paragraph (g) of this AD, provided one of the actions specified in paragraph (r)(1) or (r)(2) of this AD have been done.

(1) The procedures specified in paragraph (f) of AD 2008–24–51 have been accomplished.

(2) The actions specified in Part 3 of the Accomplishment Instructions of Boeing Alert Service Bulletin 737–28A1206, Revision 2, dated May 21, 2009, have been accomplished.

Optional Terminating Action

(s) Installing and maintaining TDG Aerospace, Inc., universal fault interrupter (UFI), in accordance with Supplemental Type Certificate (STC) ST02076LA, issued October 26, 2007, terminates the actions required by paragraphs (g) through (k) of this AD; provided that, concurrently with installing a UFI on any airplane in an operator's fleet, a placard is installed adjacent to the pilot's primary flight display on all airplanes in the operator's fleet not equipped with a UFI or an automatic shutoff system. The placard reads as follows, except as provided by paragraph (t) of this AD:

"AD 2002–24–51 fuel usage restrictions required."

Installation of a placard in accordance with paragraph (h) of this AD is acceptable for compliance with the placard installation required by this paragraph. Installing a UFI in accordance with STC ST02076LA on an airplane terminates the placard installation required by this paragraph for only that airplane. Installing UFIs in accordance with STC ST02076LA, or automatic shutoff systems in accordance with paragraph (g) of this AD, on all airplanes in an operator's fleet terminates the placard installation required by this paragraph for all airplanes in an operator's fleet. If operation according to the fuel usage restrictions of AD 2002–24–51 and AD 2001–08–24 is maintained until UFIs or automatic shutoff systems are installed on all airplanes in an operator's fleet, the placard installation specified in this paragraph is not required.

Alternative Methods of Compliance (AMOCs)

(t)(1) The Manager, Seattle Aircraft Certification Office (ACO), FAA, has the authority to approve AMOCs for this AD, if requested using the procedures found in 14 CFR 39.19. In accordance with 14 CFR 39.19, send your request to your principal inspector or local Flight Standards District Office, as appropriate. If sending information directly to the manager of the ACO, send it to the attention of the person identified in the Related Information section of this AD. Information may be e-mailed to: *9-ANM-Seattle-ACO-AMOC-Requests@faa.gov*.

(2) Before using any approved AMOC, notify your appropriate principal inspector, or lacking a principal inspector, the manager of the local flight standards district office/certificate holding district office.

Related Information

(u) For more information about this AD, contact Tak Kobayashi, Aerospace Engineer, Propulsion Branch, ANM–140S, FAA, Seattle Aircraft Certification Office, 1601 Lind Ave., SW., Renton, Washington 98057–3356; *phone:* (425) 917–6499; *fax:* (425) 917–6590; *e-mail: Takahisa.Kobayashi@faa.gov*.

(v) For service information identified in this AD, contact Boeing Commercial Airplanes, *Attention:* Data & Services Management, P.O. Box 3707, MC 2H–65, Seattle, Washington 98124–2207; telephone 206–544–5000, extension 1; fax 206–766–5680; e-mail *me.boecom@boeing.com;* Internet *https://www.myboeingfleet.com*. You may review copies of the referenced service information at the FAA, Transport Airplane Directorate, 1601 Lind Avenue, SW., Renton, Washington. For information on the availability of this material at the FAA, call 425–227–1221.

Issued in Renton, Washington, on February 25, 2011.

Ali Bahrami,

Manager, Transport Airplane Directorate, Aircraft Certification Service.

[FR Doc. 2011–5156 Filed 3–7–11; 8:45 am]

BILLING CODE 4910–13–P

DEPARTMENT OF TRANSPORTATION

Federal Aviation Administration

14 CFR Part 71

[Docket No. FAA–2011–0078; Airspace Docket No. 10–AEA–20]

RIN 2120–AA66

Proposed Establishment of Helicopter Area Navigation (RNAV) Routes; Northeast United States

AGENCY: Federal Aviation Administration (FAA), DOT.

ACTION: Notice of proposed rulemaking (NPRM).

SUMMARY: This action proposes to introduce low altitude helicopter RNAV routes into the United States domestic Air Traffic Service (ATS) route structure to be used by suitably equipped helicopters having IFR-approved Global Positioning System (GPS)/Global Navigation Satellite System (GNSS) equipment. Additionally, the FAA is proposing to establish two such routes in the northeast corridor between the Washington, DC and New York City metropolitan areas. The FAA is proposing this action to enhance safety and to improve the efficient use of the navigable airspace for en route IFR helicopter operations.

DATES: Comments must be received on or before April 22, 2011.

ADDRESSES: Send comments on this proposal to the U.S. Department of Transportation, Docket Operations, M–30, 1200 New Jersey Avenue, SE., West Building Ground Floor, Room W12–140, Washington, DC 20590–0001; telephone: (202) 366–9826. You must identify FAA Docket No. FAA–2011–0078 and Airspace Docket No. 10–AEA–20 at the beginning of your comments. You may also submit comments through the Internet at *http://www.regulations.gov*.

FOR FURTHER INFORMATION CONTACT: Paul Gallant, Airspace, Regulations & ATC Procedures Group, Office of Airspace Services, Federal Aviation Administration, 800 Independence Avenue, SW., Washington, DC 20591; telephone: (202) 267–8783.

SUPPLEMENTARY INFORMATION:

Comments Invited

Interested parties are invited to participate in this proposed rulemaking by submitting such written data, views, or arguments, as they may desire. Comments that provide the factual basis supporting the views and suggestions presented are particularly helpful in developing reasoned regulatory decisions on the proposal. Comments are specifically invited on the overall regulatory, aeronautical, economic, environmental, and energy-related aspects of the proposal.

Communications should identify both docket numbers (FAA Docket No. FAA–2011–0078 and Airspace Docket No. 10–AEA–20) and be submitted in triplicate to the Docket Management System (*see* **ADDRESSES** section for address and phone number). You may also submit comments through the Internet at *http://www.regulations.gov*.

Commenters wishing the FAA to acknowledge receipt of their comments on this action must submit with those comments a self-addressed, stamped postcard on which the following statement is made: "Comments to FAA Docket No. FAA–2011–0078 and Airspace Docket No. 10–AEA–20." The postcard will be date/time stamped and returned to the commenter.

All communications received on or before the specified closing date for comments will be considered before taking action on the proposed rule. The proposal contained in this action may be changed in light of comments received. All comments submitted will